Read the Docs Template Documentation

发布 *v3.3.5-125-gb65a37795*

Read the Docs

2021 年 06 月 15 日

Contents

1 快速入门 **3**

1.1 概述 . . . 3
1.2 准备工作 . . . 3
1.3 开发板指南 . . . 5
1.4 设置工具链 . . . 48
1.5 获取 ESP-IDF . . . 60
1.6 设置 ESP-IDF 路径 . . . 60
1.7 安装依赖的 Python 软件包 . . . 60
1.8 创建一个工程 . . . 61
1.9 连接 . . . 61
1.10 配置 . . . 61
1.11 编译和烧写 . . . 62
1.12 监视器 . . . 63
1.13 更新 ESP-IDF . . . 64
1.14 相关文档 . . . 65

2 快速入门 (CMake) **83**

2.1 概述 . . . 84
2.2 准备工作 . . . 84
2.3 开发板指南 . . . 85
2.4 设置工具链 . . . 118
2.5 获取 ESP-IDF . . . 132
2.6 设置环境变量 . . . 133
2.7 创建一个工程 . . . 133
2.8 连接 . . . 134
2.9 配置 . . . 134
2.10 创建一个工程 . . . 136

2.11 烧录到设备 . . . 137
2.12 监视器 . . . 138
2.13 更新 ESP-IDF . . . 139
2.14 相关文档 . . . 139

3 API Reference 153
3.1 Bluetooth API . . . 153
3.2 Networking APIs . . . 639
3.3 Peripherals API . . . 771
3.4 Application Protocols . . . 1084
3.5 Provisioning API . . . 1184
3.6 Storage API . . . 1228
3.7 System API . . . 1321
3.8 Configuration Options . . . 1604
3.9 Error Codes Reference . . . 1819

4 ESP32 H/W 硬件参考 1827
4.1 ESP32 Modules and Boards . . . 1827
4.2 Previous Versions of ESP32 Modules and Boards . . . 1835

5 API 指南 1843
5.1 ESP-IDF 编程注意事项 . . . 1843
5.2 构建系统 . . . 1849
5.3 构建系统（CMake 版） . . . 1862
5.4 错误处理 . . . 1891
5.5 Fatal Errors . . . 1894
5.6 Deep Sleep Wake Stubs . . . 1901
5.7 ESP32 Core Dump . . . 1904
5.8 Flash Encryption . . . 1907
5.9 ESP-IDF FreeRTOS SMP Changes . . . 1920
5.10 Thread Local Storage . . . 1929
5.11 High-Level Interrupts . . . 1930
5.12 JTAG 调试 . . . 1932
5.13 Bootloader . . . 1998
5.14 分区表 . . . 2001
5.15 Secure Boot . . . 2005
5.16 ULP coprocessor programming . . . 2014
5.17 ULP coprocessor programming (CMake) . . . 2045
5.18 ESP32 中的单元测试 . . . 2051
5.19 ESP32 中的单元测试 (CMake) . . . 2056
5.20 控制台终端 . . . 2061
5.21 ESP32 ROM console . . . 2065
5.22 RF calibration . . . 2067

5.23 Wi-Fi Driver . . . 2069
5.24 ESP-MESH . . . 2124
5.25 ESP-BLE-MESH . . . 2151
5.26 BluFi . . . 2200
5.27 Support for external RAM . . . 2209
5.28 链接脚本生成机制 . . . 2213

6 Contributions Guide 2225
6.1 How to Contribute . . . 2225
6.2 Before Contributing . . . 2225
6.3 Pull Request Process . . . 2226
6.4 Legal Part . . . 2226
6.5 Related Documents . . . 2226

7 ESP-IDF Versions 2253
7.1 Releases . . . 2253
7.2 Which Version Should I Start With? . . . 2254
7.3 Versioning Scheme . . . 2255
7.4 Support Periods . . . 2255
7.5 Checking The Current Version . . . 2256
7.6 Git Workflow . . . 2256
7.7 Updating ESP-IDF . . . 2257

8 资源 2261

9 Copyrights and Licenses 2263
9.1 Software Copyrights . . . 2263
9.2 ROM Source Code Copyrights . . . 2265
9.3 Xtensa libhal MIT License . . . 2265
9.4 TinyBasic Plus MIT License . . . 2266
9.5 TJpgDec License . . . 2266

10 About 2267

11 Switch Between Languages/切换语言 2269

索引 2271

[English]

这里是乐鑫 IoT 开发框架 (esp-idf) 的文档中心。ESP-IDF 是 ESP32 芯片的官方开发框架。

	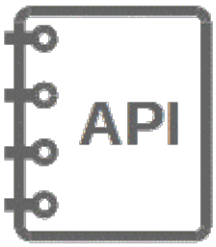	
快速入门	API 参考	H/W 参考
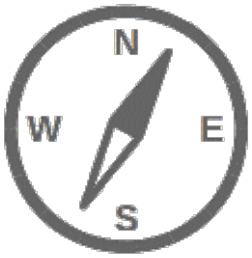	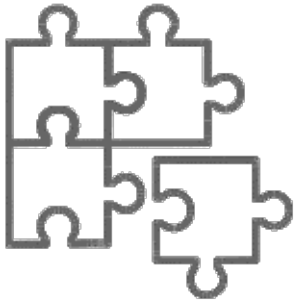	
API 指南	贡献代码	相关资源

CHAPTER 1

快速入门

[English]

本文档旨在指导用户创建 ESP32 的软件环境。本文将通过一个简单的例子来说明如何使用 ESP-IDF (Espressif IoT Development Framework)，包括配置、编译、下载固件到开发板等步骤。

注解： 这是 ESP-IDF branch `release/v3.3` 版本的文档，还有其他版本的文档*ESP-IDF Versions* 供参考。

1.1 概述

ESP32 是一套 Wi-Fi (2.4 GHz) 和蓝牙 (4.2) 双模解决方案，集成了高性能的 CPU 内核、超低功耗协处理器和丰富的外设。ESP32 采用 40 nm 工艺制成，具有最佳的功耗性能、射频性能、稳定性、通用性和可靠性，适用于各种应用和不同功耗需求。

乐鑫为用户提供完整的软、硬件资源进行 ESP32 设备的开发。乐鑫所研发的软件开发环境 ESP-IDF 能够帮助用户快速开发物联网 (IoT) 应用，满足用户对于 Wi-Fi、蓝牙、低功耗等性能的需求。

1.2 准备工作

开发 ESP32 应用程序需要准备：

- **电脑**：安装 Windows、Linux 或者 Mac 操作系统

- **工具链**：用于编译 ESP32 **应用程序**
- **ESP-IDF**：包含 ESP32 API 和用于操作 **工具链**的脚本
- **文本编辑器**：编写 C 语言程序，例如 Eclipse
- **ESP32 开发板**和将其连接到 **电脑**的 **USB 线**

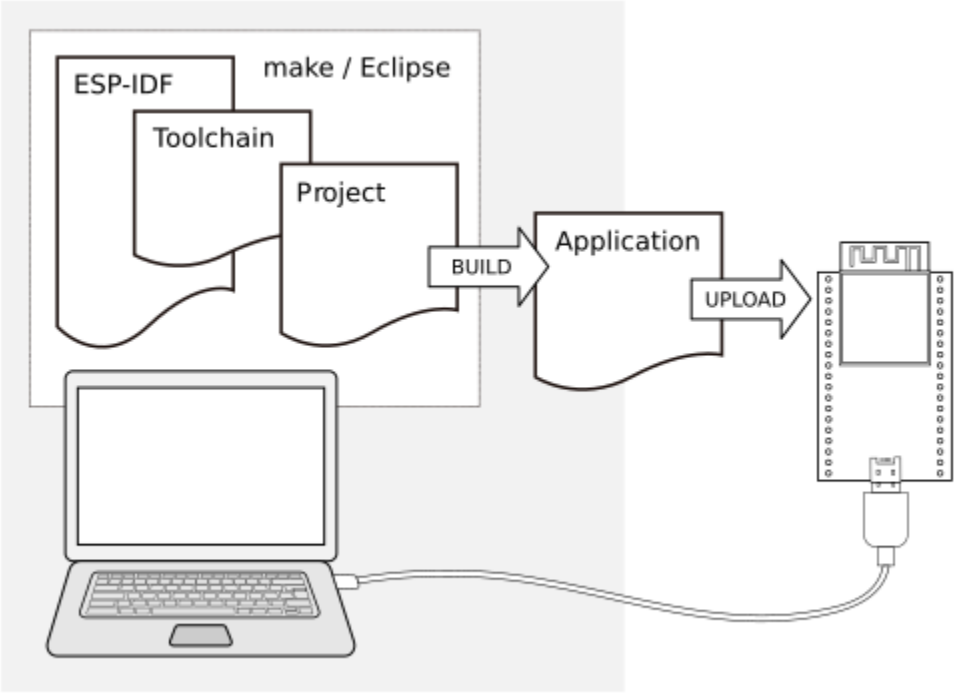

图 1: 开发应用程序

开发环境的准备工作包括以下三部分：

1. 设置 **工具链**
2. 从 GitHub 上获取 **ESP-IDF**
3. 安装和配置 **Eclipse**

如果你偏好使用其它编辑器，可以跳过最后一步。

环境设置好后，就可以开始开发应用程序了。整个过程可以概括为如下四步：

1. 配置 **工程**并编写代码
2. 编译 **工程**并链接成一个 **应用程序**
3. 烧写 **应用程序**到 **ESP32**
4. 监视/调试 **应用程序**

下文将全程指导你操作完成这些步骤。

1.3 开发板指南

如果你有下列任一 ESP32 开发板，请点击对应的链接，对照指南进行操作就可以让你的板子跑起来。

1.3.1 ESP32-DevKitC V4 入门指南

[English]

本指南介绍了如何开始使用 ESP32-DevKitC V4 开发板。有关 ESP32-DevKitC 其他版本的介绍，请见：*../hw-reference/index*。

准备工作

- 1 × *ESP32-DevKitC V4 开发板*
- 1 × USB A / micro USB B 电缆
- 1 × PC（Windows、Linux 或 Mac OS）

简介

ESP32-DevKitC V4 是一款来自 乐鑫 的迷你开发板，板上模组的绝大部分管脚均已引出，可根据用户需求，轻松连接多种外围器件。此外，本开发板还采用了标准排母，可便利杜邦线的使用。

本开发板可支持多款 ESP32 模组，包括*ESP32-WROOM-32*，*ESP32-WROOM-32U*，*ESP32-WROOM-32D*，*ESP32-SOLO-1* 及*ESP32-WROVER* 系列。

注解： 乐鑫还同时提供多种 ESP32-DevKitC 型号，采用不同模组或排针/排母设计，用户可按需选择。更多详情，请见 乐鑫产品订购信息 。

功能说明

ESP32-DevKitC V4 开发板的主要组件、接口及控制方式如下文所示。

ESP32-WROOM-32D ESP32-DevKitC V4 开发板上焊接的标准*ESP32-WROOM-32D* 模组。

额外空间 本开发板的还预留了部分额外空间，用于焊接其他 ESP32-WROOM-32 之外的较长模组，比如*ESP32-WROVER* 模组。

USB-UART 桥接器 单芯片 USB-UART 桥接器，可提供高达 3 Mbps 的传输速率。

Boot 按键 按下 **Boot** 键并保持，同时按一下 **EN** 键（此时不要松开 **Boot** 键）进入固件下载模式，通过串口下载固件。

EN 按键 复位键，可重置系统。

Micro USB 端口 USB 接口，可用作电路板的供电电源，或连接 PC 端的通信接口。

LED 电源指示灯 开发板通电后（USB 或外部 5 V），该指示灯将亮起。更多信息，请见相关文档 中的原理图。

I/O 连接器 ESP32-DevKitC V4 迷你开发板，板上模组的绝大部分管脚均已引出。用户可以对 ESP32 进行编程，实现 PWM、ADC、DAC、I2C、I2S、SPI 等多种功能。

注解： 引脚 CLK、D0、D1、D2、D3 和 CMD (GPIO6 - GPIO11) 用于 ESP32-WROOM-32、ESP32-WROOM-32D/U 和 ESP32-SOLO-1 模组的内部 SPI 通信，集中分布在 USB 接口一侧。通常而言，这些引脚最好不连，否则可能影响 SPI flash 内存 / SPI RAM 的工作。

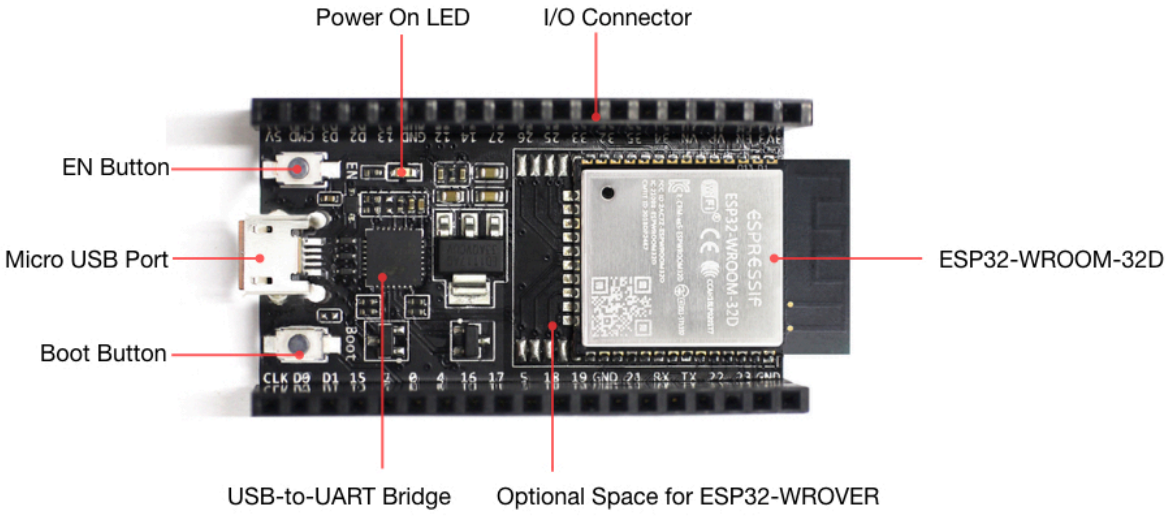

图 2: 图为 ESP32-DevKitC V4（贴 ESP32-WROOM-32D）

电源选项

ESP32-DevKitC V4 支持以下几种供电模式：

1. Micro USB 接口供电（默认）
2. 5V / GND 管脚供电
3. 3V3 / GND 管脚供电

警告： 上述供电模式不可同时连接，否则可能会损坏电路板和/或电源。

C15 相关说明

较早版本 ESP32-DevKitC 上的 C15 可能带来两个问题：

1. 开发板上电后可能进入下载模式；
2. 如果用户通过 GPIO0 输出时钟，C15 可能会影响时钟输出。

用户如果认为 C15 可能影响开发板的使用，则可以将 C15 完全移除（C15 在开发板上的具体位置见下图黄色部分）。否则，则无需处理 C15。

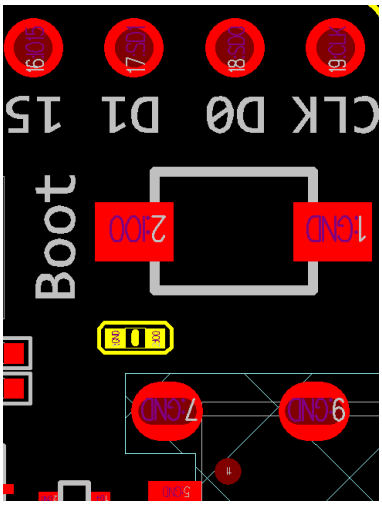

图 3: C15（黄色部分）在 ESP32-DevKitC V4 开发板上的具体位置

应用程序开发

ESP32-DevKitC 上电前，请首先确认电路板完好无损。

有关应用程序开发的具体步骤，请见章节快速入门：

- 设置 *Toolchain*，以便用 C 语言开发应用
- 连接 模组至 PC，并确认访问状态
- 构建并向 *ESP32* 烧录示例
- 即刻监测 应用程序的动作

开发板尺寸

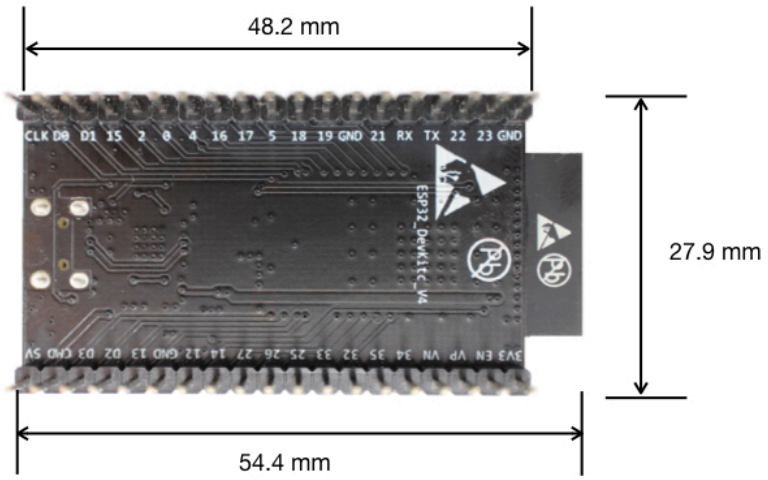

图 4: ESP32-DevKitC 开发板尺寸 - 背面

相关文档

- ESP32-DevKitC V4 原理图 (PDF)
- ESP32 技术规格书 (PDF)
- ESP32-WROOM-32 技术规格书 (PDF)
- ESP32-WROOM-32D/U 技术规格书 (PDF)
- 乐鑫产品订购信息 (PDF)

ESP32-DevKitC V2 Getting Started Guide

This user guide shows how to get started with ESP32-DevKitC development board.

What You Need

- 1 × *ESP32-DevKitC V2 board*
- 1 × USB A / micro USB B cable
- 1 × PC loaded with Windows, Linux or Mac OS

Overview

ESP32-DevKitC is a small-sized ESP32-based development board produced by Espressif. Most of the I/O pins are broken out to the pin headers on both sides for easy interfacing. Developers can connect these pins to peripherals as needed. Standard headers also make development easy and convenient when using a breadboard.

Functional Description

The following list and figure below describe key components, interfaces and controls of ESP32-DevKitC board.

ESP-WROOM-32 Standard ESP-WROOM-32 module soldered to the ESP32-DevKitC board.

EN Reset button: pressing this button resets the system.

Boot Download button: holding down the **Boot** button and pressing the **EN** button initiates the firmware download mode. Then user can download firmware through the serial port.

USB USB interface. It functions as the power supply for the board and the communication interface between PC and ESP-WROOM-32.

I/O Most of the pins on the ESP-WROOM-32 are broken out to the pin headers on the board. Users can program ESP32 to enable multiple functions such as PWM, ADC, DAC, I2C, I2S, SPI, etc.

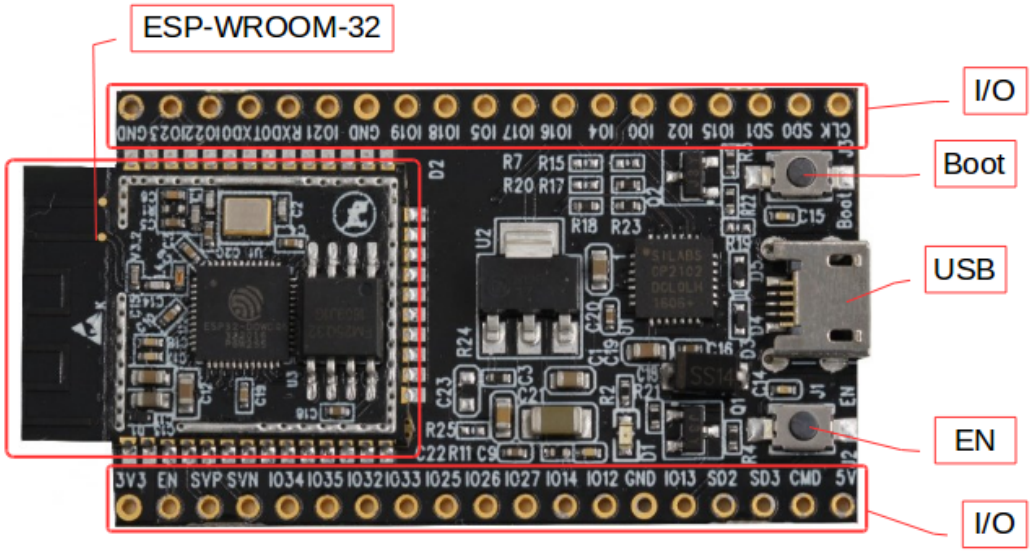

图 5: ESP32-DevKitC V2 board layout

Power Supply Options

There following options are available to provide power supply to this board:

1. Micro USB port, this is default power supply connection
2. 5V / GND header pins
3. 3V3 / GND header pins

警告: Above options are mutually exclusive, i.e. the power supply may be provided using only one of the above options. Attempt to power the board using more than one connection at a time may damage the board and/or the power supply source.

Start Application Development

Before powering up the ESP32-DevKitC, please make sure that the board has been received in good condition with no obvious signs of damage.

To start development of applications, proceed to section 快速入门, that will walk you through the following steps:

- 设置工具链 in your PC to develop applications for ESP32 in C language
- 连接 the module to the PC and verify if it is accessible
- 编译和烧写 an example application to the ESP32
- 监视器 instantly what the application is doing

Related Documents

- ESP32-DevKitC schematic (PDF)
- ESP32 Datasheet (PDF)
- ESP-WROOM-32 Datasheet (PDF)

1.3.2 ESP-WROVER-KIT V4.1 入门指南

[English]

本指南介绍了如何开始使用 ESP-WROVER-KIT V4.1 开发板。有关 ESP-WROVER-KIT 其他版本的介绍，请见：*ESP32 H/W 硬件参考*。

如果你希望开始 ESP-WROVER-KIT V4.1 的应用开发，请直接前往章节应用程序开发。

准备工作

- 1 × *ESP-WROVER-KIT V4.1 开发板*
- 1 × USB A / micro USB B 电缆
- 1 × PC（Windows、Linux 或 Mac OS）

简介

ESP-WROVER-KIT 是一款来自 乐鑫 的开发板，板上模组的绝大部分管脚均已引出，可根据用户需求，轻松连接多种外围器件。本开发板搭配一块 LCD 显示器，支持 MicroSD 卡槽拓展，还搭载一款先进多协议 USB 桥接器 (FTDI FT2232HL)，允许开发者直接通过 USB 接口，使用 JTAG 对 ESP32 进行调试，便利用户的二次开发。

ESP-WROVER-KIT V4.1 开发板可兼容 ESP32-WROOM-32、ESP32-WROVER 和 ESP32-WROVER-B 模组，默认贴 ESP32-WROVER-B 模组。

功能框图

ESP-WROVER-KIT 开发板的主要组件和连接方式如下图所示。

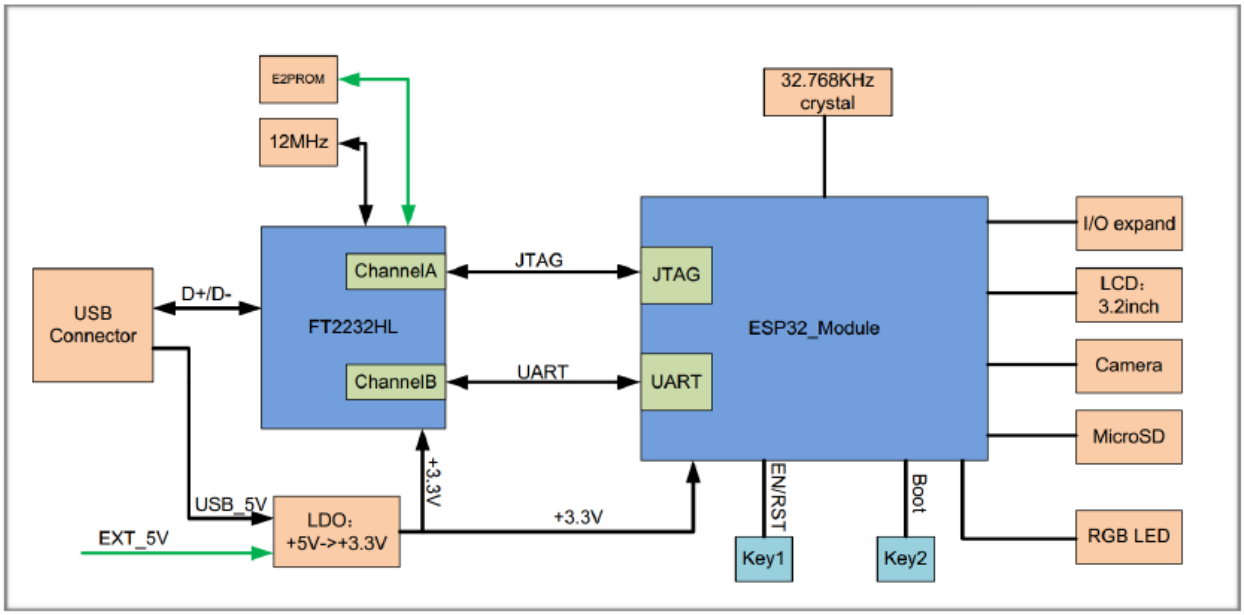

图 6: ESP-WROVER-KIT 功能框图

功能描述

ESP-WROVER-KIT 开发板的主要组件、接口及控制方式如下文所示。

32.768 kHz 晶振 32.768 kHz 晶振，可提供 Deep-sleep 下使用的低功耗时钟。

USB-UART 桥接器 单芯片 USB-UART 桥接器 (FT2232)，可提供高达 3 Mbps 的传输速率。开发者可通过 USB 接口对 FT2232 芯片进行控制和编程，与 ESP32 建立连接。FT2232 芯片可在通道 A 提供 USB-to-JTAG 接口功能，并在通道 B 提供 USB-to-serial 接口功能。ESP-WROVER-KIT 的内置 FT2232 芯片功能强大，是这款开发板的特色之一，可显著便利用户的应用开发与调试。此外，用户无需单独购买 JTAG 调试器，可降低应用开发成本。具体请见 ESP-WROVER-KIT V4.1 原理图 。

0 欧电阻 ESP-WROVER-KIT 开发板设计了一个 0 欧电阻，可在测量 ESP32 系列模组在不同功耗模式下的电流时，直接移除或替换为分流器。

ESP32-WROVER 模组 ESP-WROVER-KIT V4.1 默认贴 ESP-WROVER-B 模组，内置 8 MB PSRAM，可提供灵活的额外存储空间和数据处理能力。本开发板支持的其他模组的信息，请见 *WROOM, SOLO and WROVER Modules*。

注解: GPIO16 和 GPIO17 用于为 PSRAM 提供 CS 和时钟信号，因此并未引出。

诊断 LED 信号灯 本开发板 FT2232 芯片的 GPIO 管脚连接了 4 个 LED 信号灯，以备后用。

UART FT2232HL 和 ESP32 的串行 TX/RX 信号已引出至 JP2 的两端。默认情况下，这两路信号由跳线帽连接。如果仅需使用 ESP32 模组串口，则可移除相关跳线帽，将模组连接至其他外部串口设备。

SPI 该 SPI 接口可用于 ESP32 访问模组 flash 和 PSRAM 内存。注意，该接口的电压取决于开发板上贴的模组。

CTS/RTS 串口流控信号。管脚默认不连接至电路。为了使能该功能，必须用跳线帽断路掉 JP14 连接器的相应管脚。

JTAG FT2232HL 和 ESP32 的串口 JTAG 信号已引出至 JP2 连接器的两端。默认情况下，这两路信号不连接。如需使能 JTAG，请按照设置选项 中的介绍，连接跳线帽。

USB 端口 USB 端口，可用作电路板的供电电源或连接 PC 端的通信接口。

EN 按键 复位键，可重置系统。

Boot 按键 下载按键。按下 **Boot** 键并保持，同时按一下 **EN** 键（此时不要松开 **Boot** 键）进入固件下载模式，通过串口下载固件。

电源开关 拨置右侧，开发板上电；拨置左侧，开发板掉电。

电源选择开关 ESP-WROVER-KIT 开发板可通过 USB 端口或 5V 输入端口供电。用户可使用跳线帽在两种供电模式中进行选择。更多详细信息，请见章节设置选项 中有关 JP7 连接器的描述。

5V 输入 5V 电源接口仅用于全负荷工作下的后备电源。

5V LED 电源指示灯 当开发板通电后（USB 或外部 5V 供电），该指示灯将亮起。

LDO 5V-to-3.3V LDO NCP1117(1 A)（也可选 Pin-to-Pin LDO LM317DCY，最高输出电流为 1.5 A）。NCP1117 最大电流输出为 1 A。LDO 解决方案同时支持固定输出电压和可变输出电压。更多信息，请见 ESP-WROVER-KIT V4.1 原理图。

摄像头连接器 摄像头接口：支持标准 OV7670 摄像头模块。

RGB LED 红绿蓝发光二极管，由 PMW 控制。

I/O 连接器 ESP32 系列模组的所有管脚均引出至 ESP-WROVER-KIT 的排针。用户可对 ESP32 进行编程，实现 PWM、ADC、DAC、I2C、I2S、SPI 等多种功能。

Micro SD 卡槽 可用于一些使用 Micro SD 卡，扩充数据存储空间或进行备份的应用开发。

LCD 显示器 ESP-WROVER-KIT 支持贴装一款 3.2" 的 SPI（标准四线串行外设接口）LCD 显示器，请见*ESP-WROVER-KIT 开发板 - 背面*。

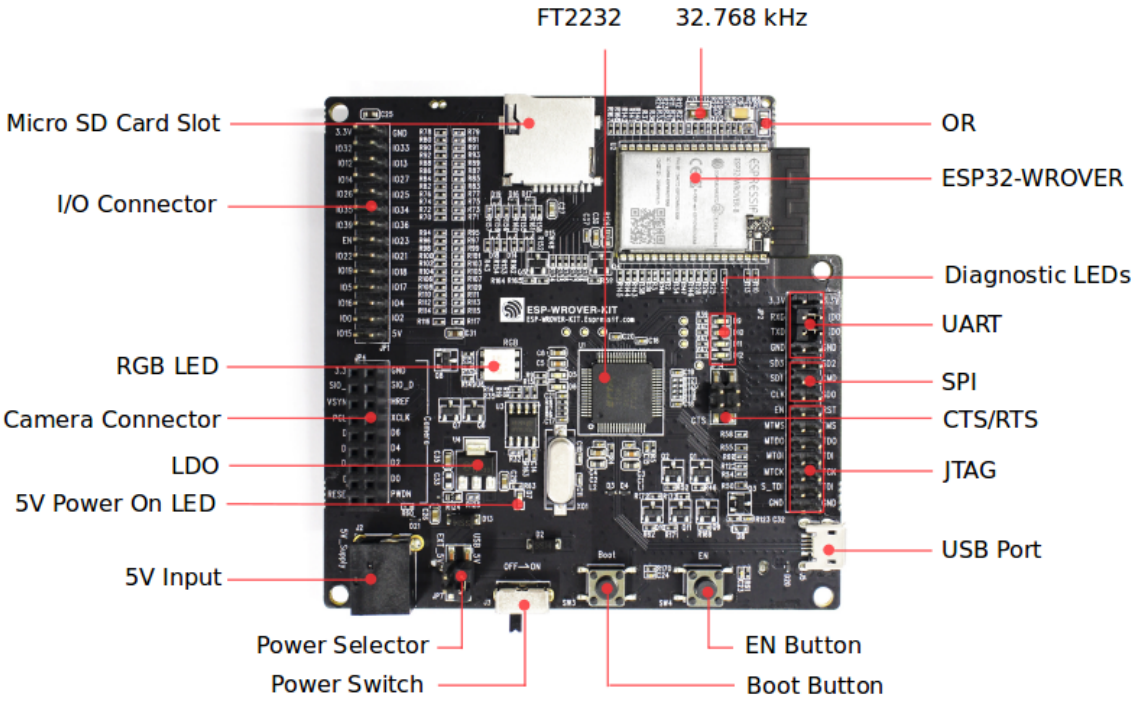

图 7: ESP-WROVER-KIT 开发板 - 正面

设置选项

用户可通过 3 组排针，设置开发板功能，详见下表：

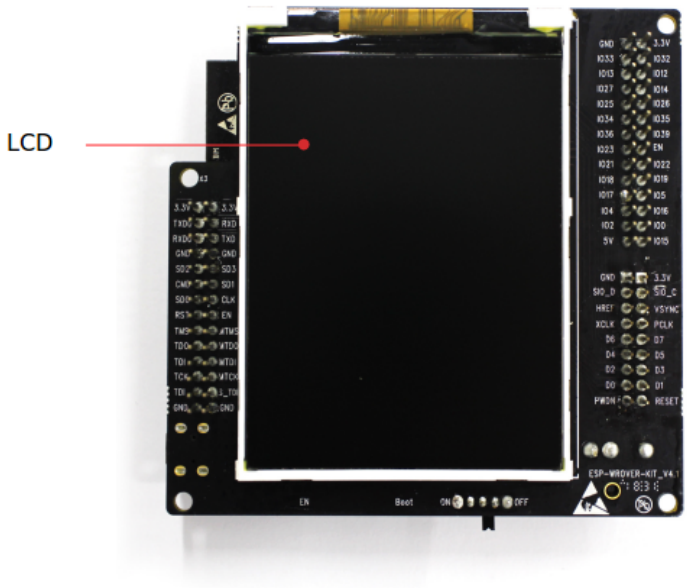

图 8: ESP-WROVER-KIT 开发板 - 背面

排针	跳线设置	功能描述
JP7		使用外部电源为 ESP-WROVER-KIT 开发板供电
JP7	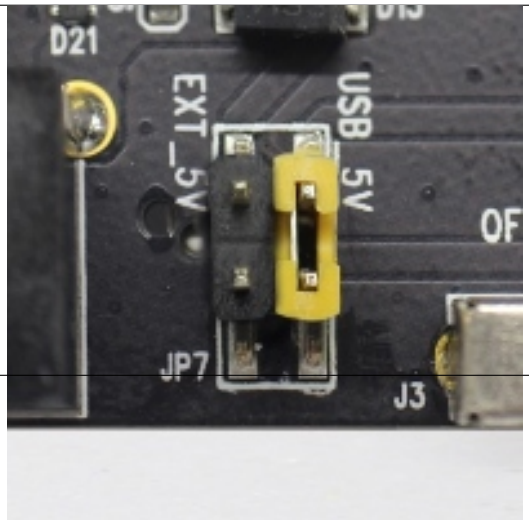	使用 USB 端口为 ESP-WROVER-KIT 开发板供

ESP32 管脚分配

ESP32 模组的多个管脚已分配给开发板的硬件使用，部分支持多个功能，比如 GPIO0 和 GPIO2。如果某管脚对应的特定硬件未连接，则该管脚可用作他用。比如，摄像头/JP4 排针未连接相应硬件，则这些 GPIO 可用于其他用途。

主要 I/O 连接器 / JP1

JP1 连接器可见下表中部的“I/O”列，GPIO 共用描述可见下表两侧的“共用”列：

共用	I/O	I/O	共用
–	3.3 V	GND	–
NC/XTAL	IO32	IO33	NC/XTAL
JTAG, MicroSD	IO12	IO13	JTAG, MicroSD
JTAG, MicroSD	IO14	IO27	Camera
Camera	IO26	IO25	Camera, LCD
Camera	IO35	IO34	Camera
Camera	IO39	IO36	Camera
JTAG	EN	IO23	Camera, LCD
Camera, LCD	IO22	IO21	Camera, LCD, MicroSD
Camera, LCD	IO19	IO18	Camera, LCD
Camera, LCD	IO5	IO17	PSRAM
PSRAM	IO16	IO4	LED, Camera, MicroSD
Camera, LED, Boot	IO0	IO2	LED, MicroSD
JTAG, MicroSD	IO15	5 V	–

说明：

- NC/XTAL - *32.768 kHz Oscillator*
- JTAG - *JTAG / JP8*
- Boot - Boot button / SW2
- Camera - *Camera / JP4*
- LED - *RGB LED*
- MicroSD - *MicroSD Card / J4*
- LCD - *LCD / U5*
- PSRAM - 适用于贴装 ESP32-WROVER 模组（带有 PSRAM）的情况

32.768 kHz 晶振

No.	ESP32 管脚
1	GPIO32
2	GPIO33

注解： 管脚 GPIO32 和 GPIO33 已连接至晶振，为了保证信号的完整性，并未连接至 JP1 I/O 扩展连接器。用户可通过移除 R11/R23 位置处的 0 欧电阻，并将这些 0 欧电阻安装至 R12/R24 位置，从而从晶振换至 JP1 I/O 扩展连接器。

SPI Flash / JP2

No.	ESP32 管脚
1	CLK / GPIO6
2	SD0 / GPIO7
3	SD1 / GPIO
4	SD2 / GPIO9
5	SD3 / GPIO10
6	CMD / GPIO11

重要： 模组的 flash 总线已通过 0 欧电阻 R140 ~ R145 连接至排针 JP2。如果需要将 flash 的工作频率控制在 80 MHz（比如为了保证总线信号完整性），建议将 R140 ~ R145 电阻焊掉。此时，模组的 flash 总线与排针 JP2 断开连接。

JTAG / JP2

No.	ESP32 管脚	JTAG 信号
1	EN	TRST_N
2	MTMS / GPIO14	TMS
3	MTDO / GPIO15	TDO
4	MTDI / GPIO12	TDI
5	MTCK / GPIO13	TCK

摄像头 / JP4

No.	ESP32 管脚	摄像头信号
1	n/a	3.3V
2	n/a	Ground
3	GPIO27	SIO_C / SCCB 时钟
4	GPIO26	SIO_D / SCCB 数据
5	GPIO25	VSYNC / 垂直同步
6	GPIO23	HREF / 水平参考
7	GPIO22	PCLK / 像素时钟
8	GPIO21	XCLK / 系统时钟
9	GPIO35	D7 / 像素数据第 7 位
10	GPIO34	D6 / 像素数据第 6 位
11	GPIO39	D5 / 像素数据第 5 位
12	GPIO36	D4 / 像素数据第 4 位
13	GPIO19	D3 / 像素数据第 3 位
14	GPIO18	D2 / 像素数据第 2 位
15	GPIO5	D1 / 像素数据第 1 位
16	GPIO4	D0 / 像素数据第 0 位
17	GPIO0	RESET / 摄像头复位
18	n/a	PWDN / 摄像头掉电

- 信号 D0 .. D7 为摄像头数据总线

RGB LED

No.	ESP32 管脚	RGB LED
1	GPIO0	红
2	GPIO2	绿
3	GPIO4	蓝

MicroSD 卡 / J4

No.	ESP32 管脚	MicroSD 信号
1	MTDI / GPIO12	DATA2
2	MTCK / GPIO13	CD / DATA3
3	MTDO / GPIO15	CMD
4	MTMS / GPIO14	CLK
5	GPIO2	DATA0
6	GPIO4	DATA1
7	GPIO21	CD

LCD / U5

No.	ESP32 管脚	LCD 信号
1	GPIO18	RESET
2	GPIO19	SCL
3	GPIO21	D/C
4	GPIO22	CS
5	GPIO23	SDA
6	GPIO25	SDO
7	GPIO5	背光

应用程序开发

ESP-WROVER-KIT 上电前，请首先确认电路板完好无损。

初始设置

通过排针 JP7 选择开发板的供电模式：**USB** 端口供电或外部 **5V Input** 供电，请见下表：

USB 供电	使能 UART 通信
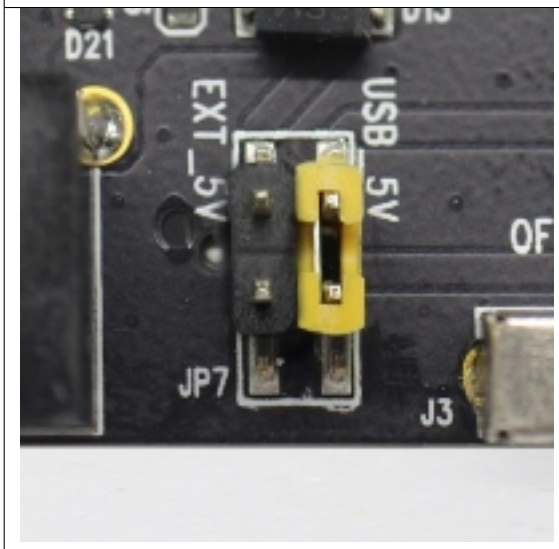	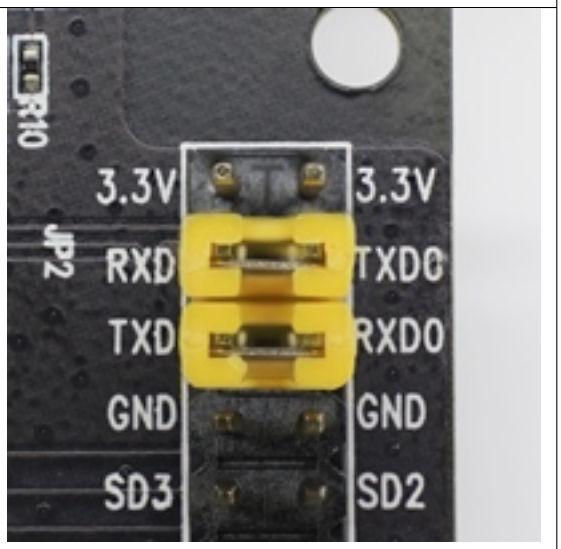

在本应用中，USB 供电已经足够。用户可通过 JP2 处的跳线设置，使能 UART 通信。

注意:

1. 不要安装任何其他跳线。
2. 打开 **电源开关**，**5V LED 指示灯**也应亮起。

开始开发

有关 ESP-WROVER-KIT 应用程序开发的具体步骤，请见章节快速入门：

- 设置 *Toolchain*，以便用 C 语言开发应用
- 连接 模组至 PC，并确认访问状态
- 构建并向 *ESP32* 烧录示例
- 即刻监测 应用程序的动作

相关文档

- ESP-WROVER-KIT V4.1 原理图 (PDF)
- ESP32 技术规格书 (PDF)
- ESP32-WROVER-B 技术规格书 (PDF)
- *JTAG* 调试

- *ESP32 H/W 硬件参考*

ESP-WROVER-KIT V3 Getting Started Guide

This user guide shows how to get started with the ESP-WROVER-KIT V3 development board including description of its functionality and configuration options. For descriptions of other versions of the ESP-WROVER-KIT check *ESP32 H/W 硬件参考*.

If you would like to start using this board right now, go directly to the 应用程序开发 section.

What You Need

- 1 × *ESP-WROVER-KIT V3 board*
- 1 x Micro USB 2.0 Cable, Type A to Micro B
- 1 × PC loaded with Windows, Linux or Mac OS

Overview

The ESP-WROVER-KIT is a development board built around the ESP32 and produced by Espressif. This board is compatible with multiple ESP32 modules, including the ESP32-WROOM-32 and ESP32-WROVER. The ESP-WROVER-KIT features support for an LCD and MicroSD card. The I/O pins have been broken out from the ESP32 module for easy extension. The board carries an advanced multi-protocol USB bridge (the FTDI FT2232HL), enabling developers to use JTAG directly to debug the ESP32 through the USB interface. The development board makes secondary development easy and cost-effective.

注解: ESP-WROVER-KIT V3 integrates the ESP32-WROVER module by default.

Functionality Overview

The block diagram below illustrates the ESP-WROVER-KIT ' s main components and their interconnections.

Functional Description

The following lists and figures describe the key components, interfaces, and controls of ESP-WROVER-KIT board.

32.768 kHz An external precision 32.768 kHz crystal oscillator provides a low-power consumption clock used during Deep-Sleep mode.

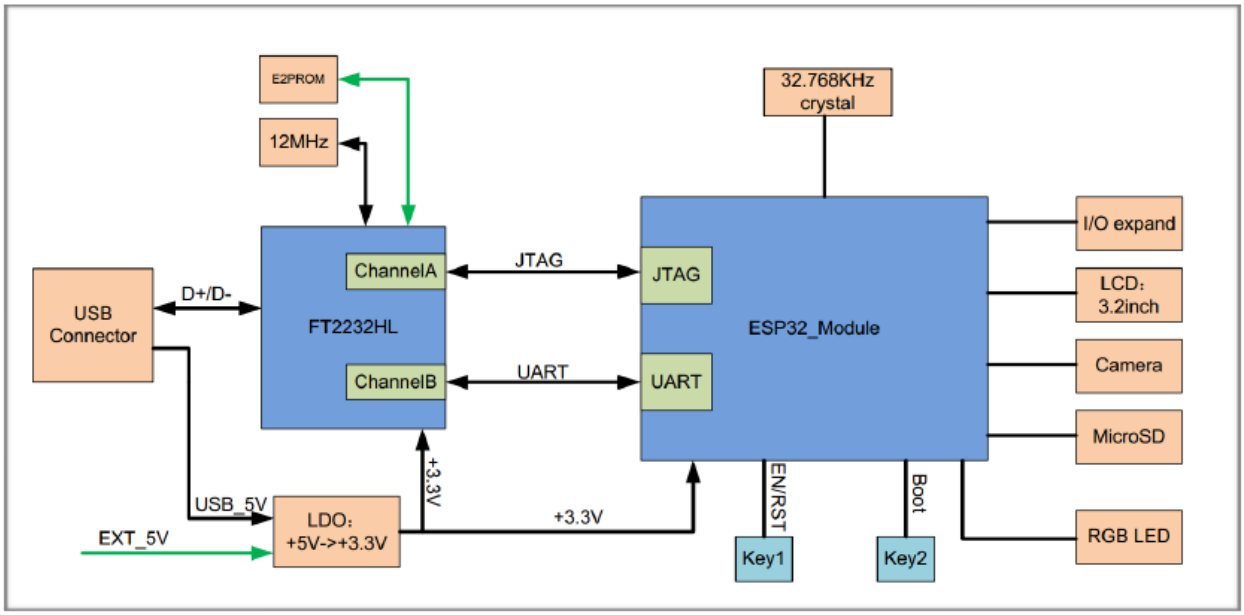

图 9: ESP-WROVER-KIT block diagram

0R A zero Ohm resistor intended as a placeholder for a current shunt. May be desoldered or replaced with a current shunt to facilitate measurement of current required by ESP32 module depending on power mode.

ESP32 Module ESP-WROVER-KIT is compatible with both the ESP32-WROOM-32 and the ESP32-WROVER. The ESP32-WROVER module features all the functions of ESP32-WROOM-32 and integrates an external 32-Mbit PSRAM for flexible extended storage and data processing capabilities.

注解: GPIO16 and GPIO17 are used as the CS and clock signal for PSRAM. To ensure reliable performance, the two GPIOs are not broken out.

FT2232 The FT2232 chip is a multi-protocol USB-to-serial bridge. Users can control and program the FT2232 chip through the USB interface to establish communication with ESP32. The FT2232 chip also features USB-to-JTAG interface. USB-to-JTAG is available on channel A of the FT2232, whilst USB-to-serial is on channel B. The embedded FT2232 chip is one of the distinguishing features of the ESP-WROVER-KIT. It enhances users' convenience in terms of application development and debugging. In addition, users need not purchase a JTAG debugger separately, which reduces the development cost, see ESP-WROVER-KIT V3 schematic.

UART Serial port: the serial TX/RX signals on the FT2232HL and the ESP32 are broken out to each side of JP11. By default, the two signals are connected with jumpers. To use the ESP32 module serial interface only, the jumpers may be removed and the module can be connected to another external serial device.

SPI The SPI interface is used by the ESP32 to access flash and PSRAM memories within the module

itself. To interface with another SPI device, an extra CS signal is needed. Please note that the voltage level on this interface depends on the module used (e.g 1.8V and 3.3V for the ESP32-WROVER and ESP32-WROOM-32 respectively).

CTS/RTS Serial port flow control signals: the pins are not connected to the circuitry by default. To enable them, respective pins of JP14 must be shorted with jumpers.

JTAG JTAG interface: the JTAG signals on FT2232HL and ESP32 are broken out to the two sides of JP8. By default, the two signals are disconnected. To enable JTAG, shorting jumpers are required on the signals.

EN Reset button: pressing this button resets the system.

Boot Download button: holding down the **Boot** button and pressing the **EN** button initiates the firmware download mode. Then user can download firmware through the serial port.

USB USB interface. It functions as the power supply for the board and the communication interface between PC and ESP32 module.

Power Select Power supply selection interface: the ESP-WROVER-KIT can be powered through the USB interface or the 5V Input interface. The user can select the power supply with a jumper. More details can be found in section *Setup Options*, jumper header JP7.

Power Key Power on/off button: toggling to the right powers the board on; toggling to the left powers the board off.

5V Input The 5V power supply interface is used as a backup power supply in case of full-load operation.

LDO NCP1117(1A). 5V-to-3.3V LDO. (There is an alternative pin-compatible LDO —LM317DCY, with an output current of up to 1.5A). NCP1117 can provide a maximum current of 1A. The LDO solutions are available with both fixed output voltage and variable output voltage. For details please refer to ESP-WROVER-KIT V3 schematic.

Camera Camera interface: a standard OV7670 camera module is supported.

RGB Red, green and blue (RGB) light emitting diodes (LEDs), which may be controlled by pulse width modulation (PWM).

I/O All the pins on the ESP32 module are led out to the pin headers on the ESP-WROVER-KIT. Users can program ESP32 to enable multiple functions such as PWM, ADC, DAC, I2C, I2S, SPI, etc.

Micro SD Card Develop applications that access Micro SD card for data storage and retrieval.

LCD ESP-WROVER-KIT supports mounting and interfacing a 3.2" SPI (standard 4-wire Serial Peripheral Interface) LCD, as shown on figure *ESP-WROVER-KIT board layout - back*.

Setup Options

There are five jumper headers available to set up the board functionality. Typical options to select from are listed in table below.

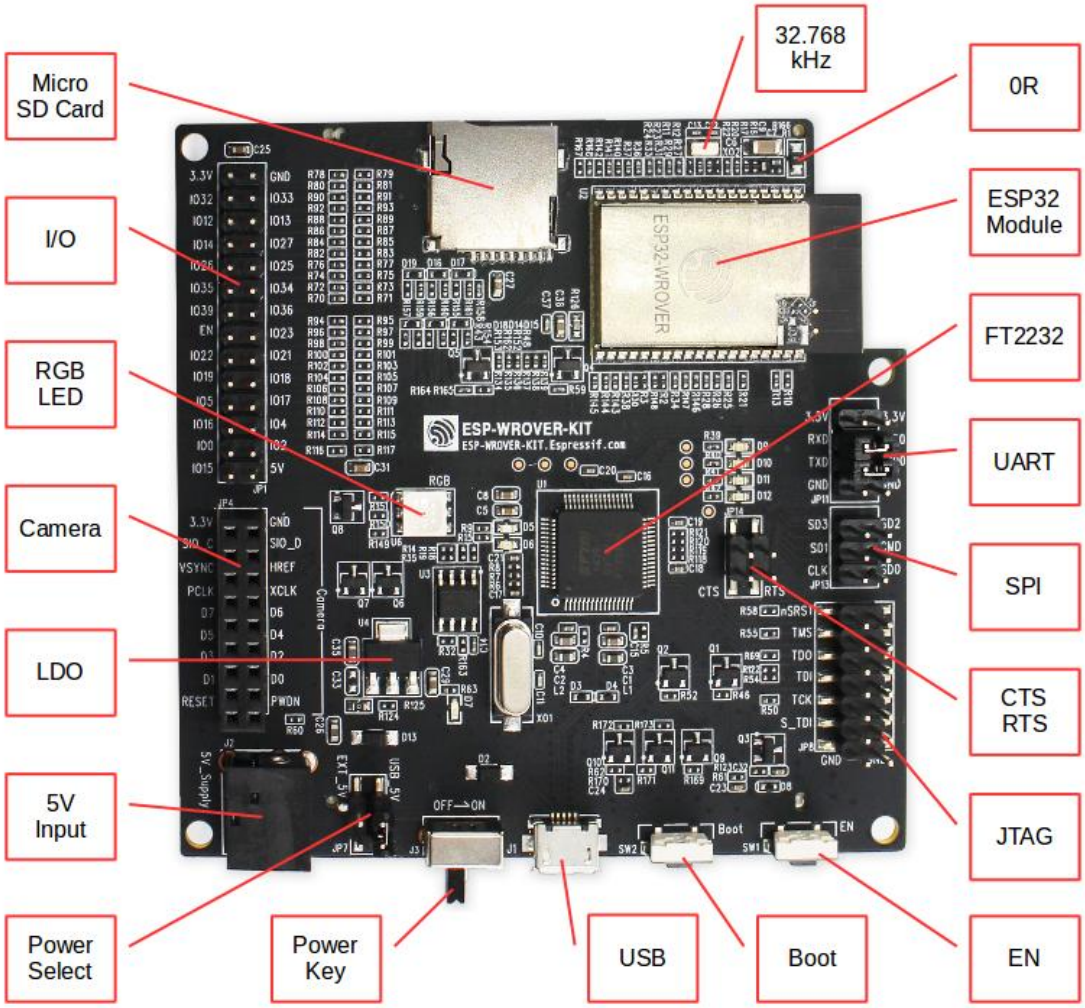

图 10: ESP-WROVER-KIT board layout - front

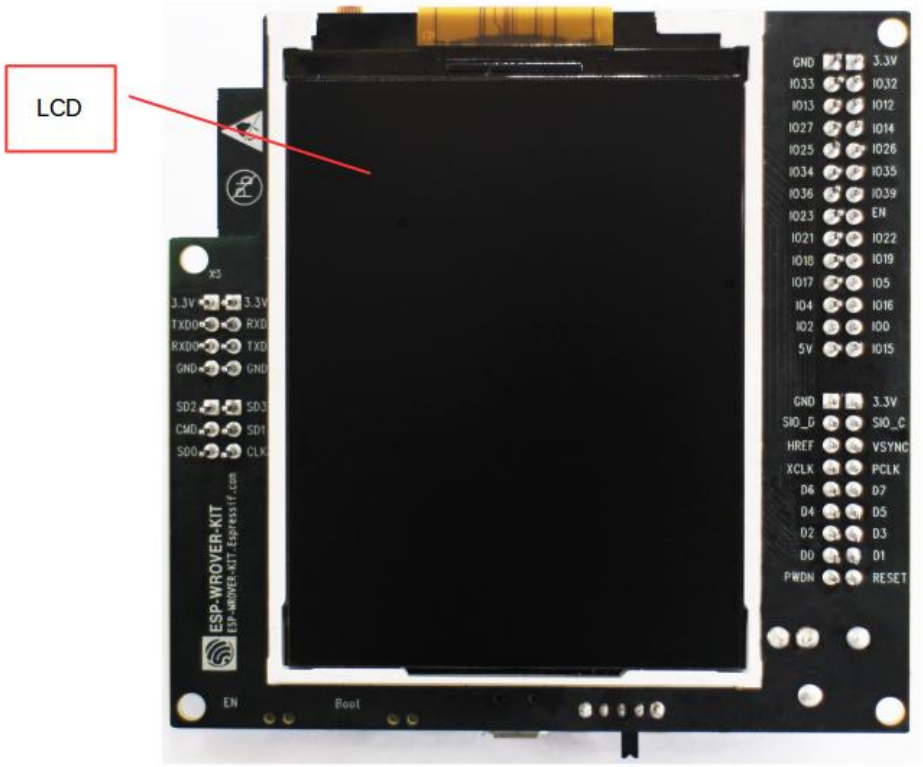

图 11: ESP-WROVER-KIT board layout - back

Header	Jumper Setting	Description of Functionality
JP7	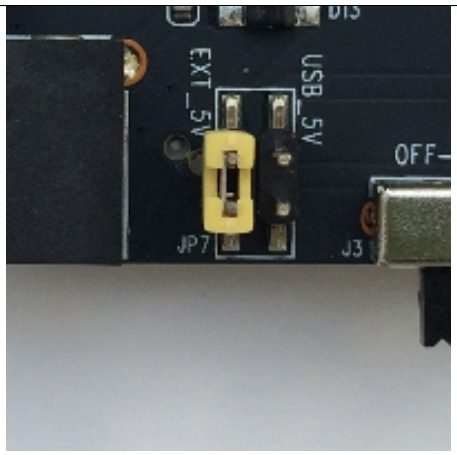	Power ESP-WROVER-KIT board from an external power supply
JP7	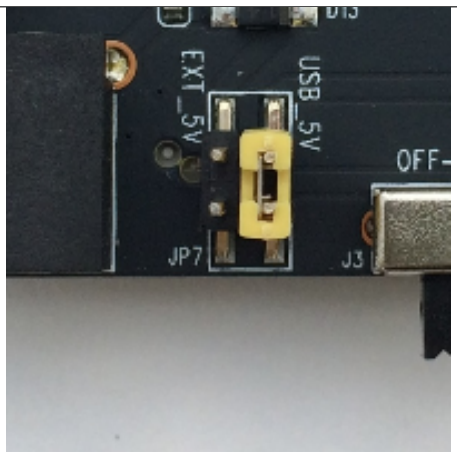	Power ESP-WROVER-KIT board from an USB port
JP8	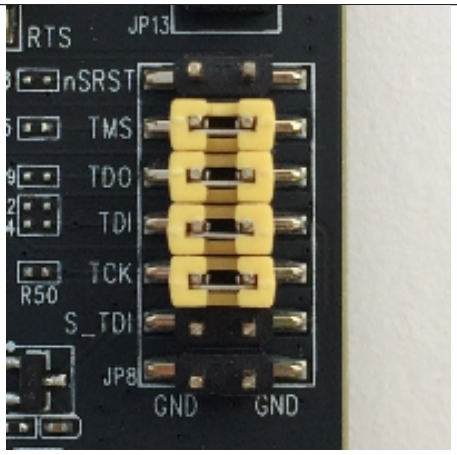	Enable JTAG functionality
JP11	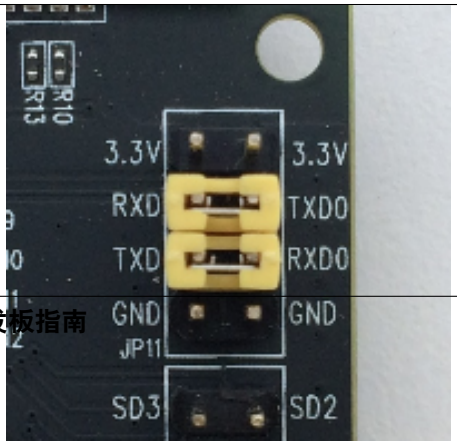	Enable UART communication

Allocation of ESP32 Pins

Several pins / terminals of ESP32 module are allocated to the on board hardware. Some of them, like GPIO0 or GPIO2, have multiple functions. If certain hardware is not installed, e.g. nothing is plugged in to the Camera / JP4 header, then selected GPIOs may be used for other purposes.

Main I/O Connector / JP1

The JP1 connector is shown in two columns in the middle under "I/O" headers. The two columns "Shared With" outside, describe where else on the board certain GPIO is used.

Shared With	I/O	I/O	Shared With
	3.3V	GND	
NC/XTAL	IO32	IO33	NC/XTAL
JTAG, MicroSD	IO12	IO13	JTAG, MicroSD
JTAG, MicroSD	IO14	IO27	Camera
Camera	IO26	IO25	Camera, LCD
Camera	IO35	IO34	Camera
Camera	IO39	IO36	Camera
JTAG	EN	IO23	Camera, LCD
Camera, LCD	IO22	IO21	Camera, LCD, MicroSD
Camera, LCD	IO19	IO18	Camera, LCD
Camera, LCD	IO5	IO17	PSRAM
PSRAM	IO16	IO4	LED, Camera, MicroSD
Camera, LED, Boot	IO0	IO2	LED, MicroSD
JTAG, MicroSD	IO15	5V	

Legend:

- NC/XTAL - *32.768 kHz Oscillator*
- JTAG - *JTAG / JP8*
- Boot - Boot button / SW2
- Camera - *Camera / JP4*
- LED - *RGB LED*
- MicroSD - *MicroSD Card / J4*
- LCD - *LCD / U5*
- PSRAM - ESP32-WROVER' s PSRAM, if ESP32-WROVER is installed

32.768 kHz Oscillator

	ESP32 Pin
1	GPIO32
2	GPIO33

注解: As GPIO32 and GPIO33 are connected to the oscillator, they are not connected to JP1 I/O expansion connector to maintain signal integrity. This allocation may be changed from oscillator to JP1 by desoldering the 0R resistors from positions R11 / R23 and installing them in positions R12 / R24.

SPI Flash / JP13

	ESP32 Pin
1	CLK / GPIO6
2	SD0 / GPIO7
3	SD1 / GPIO8
4	SD2 / GPIO9
5	SD3 / GPIO10
6	CMD / GPIO11

重要: The module’ s flash bus is connected to the pin header JP13 through 0-Ohm resistors R140 ~ R145. If the flash frequency needs to operate at 80 MHz for reasons such as improving the integrity of bus signals, it is recommended that resistors R140 ~ R145 be desoldered. At this point, the module’ s flash bus is disconnected with the pin header JP13.

JTAG / JP8

	ESP32 Pin	JTAG Signal
1	EN	TRST_N
2	MTDO / GPIO15	TDO
3	MTDI / GPIO12	TDI
4	MTCK / GPIO13	TCK
5	MTMS / GPIO14	TMS

Camera / JP4

	ESP32 Pin	Camera Signal
1	n/a	3.3V
2	n/a	Ground
3	GPIO27	SIO_C / SCCB Clock
4	GPIO26	SIO_D / SCCB Data
5	GPIO25	VSYNC / Vertical Sync
6	GPIO23	HREF / Horizontal Reference
7	GPIO22	PCLK / Pixel Clock
8	GPIO21	XCLK / System Clock
9	GPIO35	D7 / Pixel Data Bit 7
10	GPIO34	D6 / Pixel Data Bit 6
11	GPIO39	D5 / Pixel Data Bit 5
12	GPIO36	D4 / Pixel Data Bit 4
13	GPIO19	D3 / Pixel Data Bit 3
14	GPIO18	D2 / Pixel Data Bit 2
15	GPIO5	D1 / Pixel Data Bit 1
16	GPIO4	D0 / Pixel Data Bit 0
17	GPIO0	RESET / Camera Reset
18	n/a	PWDN / Camera Power Down

RGB LED

	ESP32 Pin	RGB LED
1	GPIO0	Red
2	GPIO2	Green
3	GPIO4	Blue

MicroSD Card / J4

	ESP32 Pin	MicroSD Signal
1	MTDI / GPIO12	DATA2
2	MTCK / GPIO13	CD / DATA3
3	MTDO / GPIO15	CMD
4	MTMS / GPIO14	CLK
5	GPIO2	DATA0
6	GPIO4	DATA1
7	GPIO21	CD

LCD / U5

	ESP32 Pin	LCD Signal
1	GPIO18	RESET
2	GPIO19	SCL
3	GPIO21	D/C
4	GPIO22	CS
5	GPIO23	SDA
6	GPIO25	SDO
7	GPIO5	Backlight

Start Application Development

Before powering up the ESP-WROVER-KIT, please make sure that the board has been received in good condition with no obvious signs of damage.

Initial Setup

Select the source of power supply for the board by setting jumper JP7. The options are either USB port or an external power supply. For this application selection of USB port is sufficient. Enable UART communication by installing jumpers on JP11. Both selections are shown in table below.

Power up from USB port	Enable UART communication
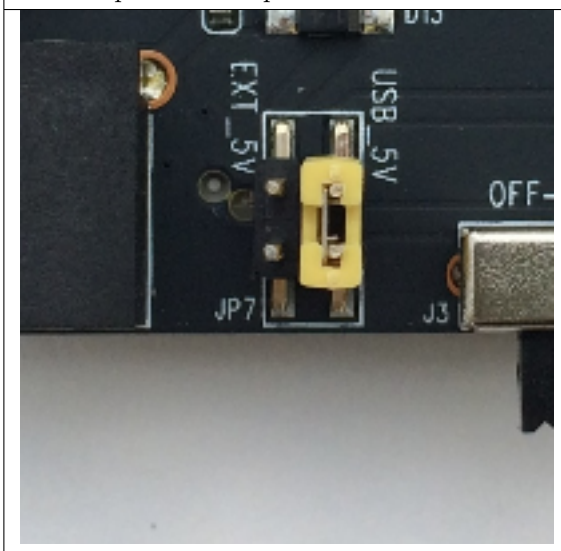	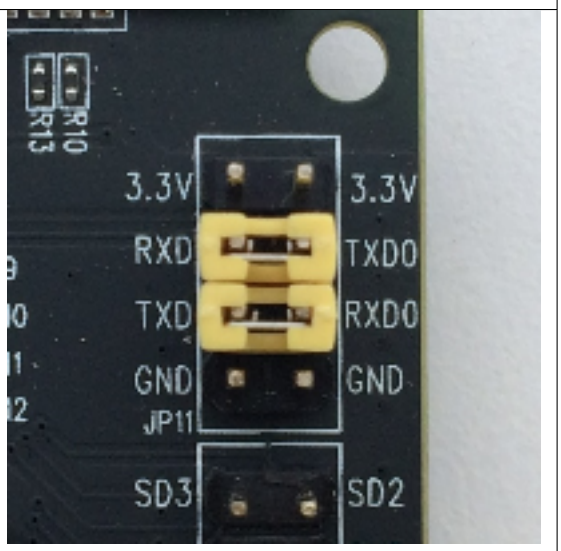

Do not install any other jumpers.

Now to Development

To start development of applications for ESP-WROVER-KIT, proceed to the 快速入门 section which will walk you through the following steps:

- 设置工具链 in your PC to develop applications for ESP32 in C language
- 连接 the module to the PC and verify if it is accessible
- 编译和烧写 an example application to the ESP32
- 监视器 instantly what the application is doing

Related Documents

- ESP-WROVER-KIT V3 schematic (PDF)
- ESP32 Datasheet (PDF)
- ESP32-WROVER Datasheet (PDF)
- ESP32-WROOM-32 Datasheet (PDF)
- *JTAG 调试*
- *ESP32 H/W 硬件参考*

ESP-WROVER-KIT V2 Getting Started Guide

This user guide shows how to get started with ESP-WROVER-KIT V2 development board including description of its functionality and configuration options. For description of other versions of the ESP-WROVER-KIT check *ESP32 H/W 硬件参考*.

If you like to start using this board right now, go directly to section *Start Application Development*.

What You Need

- 1 × ESP-WROVER-KIT V2 board
- 1 x Micro USB 2.0 Cable, Type A to Micro B
- 1 × PC loaded with Windows, Linux or Mac OS

Overview

The ESP-WROVER-KIT is a development board produced by Espressif built around ESP32. This board is compatible with ESP32 modules, including the ESP-WROOM-32 and ESP32-WROVER. The ESP-WROVER-KIT features support for an LCD and MicroSD card. The I/O pins have been broken out from the ESP32 module for easy extension. The board carries an advanced multi-protocol USB bridge (the FTDI FT2232HL), enabling developers to use JTAG directly to debug the ESP32 through the USB interface. The development board makes secondary development easy and cost-effective.

注解: ESP-WROVER-KIT V2 integrates the ESP-WROOM-32 module by default.

Functionality Overview

Block diagram below presents main components of ESP-WROVER-KIT and interconnections between components.

Functional Description

The following list and figures below describe key components, interfaces and controls of ESP-WROVER-KIT board.

32.768 kHz An external precision 32.768 kHz crystal oscillator provides the chip with a clock of low-power consumption during the Deep-sleep mode.

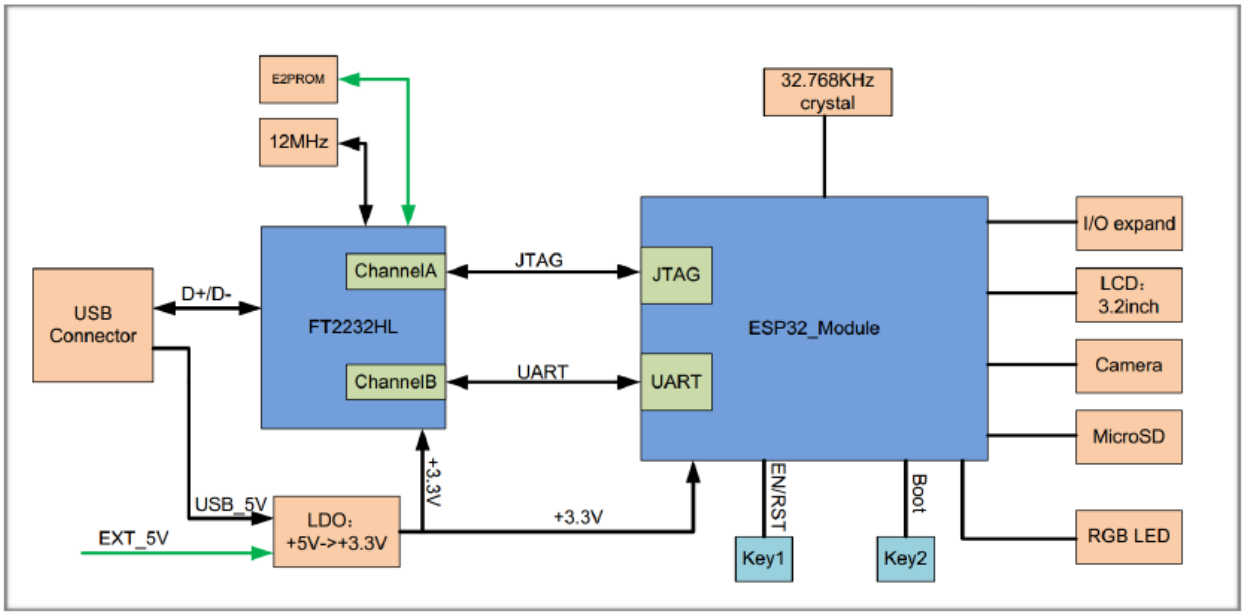

图 12: ESP-WROVER-KIT block diagram

ESP32 Module ESP-WROVER-KIT is compatible with both ESP-WROOM-32 and ESP32-WROVER. The ESP32-WROVER module features all the functions of ESP-WROOM-32 and integrates an external 32-MBit PSRAM for flexible extended storage and data processing capabilities.

注解: GPIO16 and GPIO17 are used as the CS and clock signal for PSRAM. To ensure reliable performance, the two GPIOs are not broken out.

CTS/RTS Serial port flow control signals: the pins are not connected to the circuitry by default. To enable them, respective pins of JP14 must be shorted with jumpers.

UART Serial port: the serial TX/RX signals on FT2232HL and ESP32 are broken out to the two sides of JP11. By default, the two signals are connected with jumpers. To use the ESP32 module serial interface only, the jumpers may be removed and the module can be connected to another external serial device.

SPI SPI interface: the SPI interface connects to an external flash (PSRAM). To interface another SPI device, an extra CS signal is needed. If an ESP32-WROVER is being used, please note that the electrical level on the flash and SRAM is 1.8V.

JTAG JTAG interface: the JTAG signals on FT2232HL and ESP32 are broken out to the two sides of JP8. By default, the two signals are disconnected. To enable JTAG, shorting jumpers are required on the signals.

FT2232 FT2232 chip is a multi-protocol USB-to-serial bridge. The FT2232 chip features USB-to-UART and USB-to-JTAG functionalities. Users can control and program the FT2232 chip through the USB

interface to establish communication with ESP32.

The embedded FT2232 chip is one of the distinguishing features of the ESP-WROVER-KIT. It enhances users' convenience in terms of application development and debugging. In addition, uses do not need to buy a JTAG debugger separately, which reduces the development cost, see ESP-WROVER-KIT V2 schematic.

EN Reset button: pressing this button resets the system.

Boot Download button: holding down the **Boot** button and pressing the **EN** button initiates the firmware download mode. Then user can download firmware through the serial port.

USB USB interface. It functions as the power supply for the board and the communication interface between PC and ESP32 module.

Power Select Power supply selection interface: the ESP-WROVER-KIT can be powered through the USB interface or the 5V Input interface. The user can select the power supply with a jumper. More details can be found in section *Setup Options*, jumper header JP7.

Power Key Power on/off button: toggling to the right powers the board on; toggling to the left powers the board off.

5V Input The 5V power supply interface is used as a backup power supply in case of full-load operation.

LDO NCP1117(1A). 5V-to-3.3V LDO. (There is an alternative pin-compatible LDO —LM317DCY, with an output current of up to 1.5A). NCP1117 can provide a maximum current of 1A. The LDO solutions are available with both fixed output voltage and variable output voltage. For details please refer to ESP-WROVER-KIT V2 schematic.

Camera Camera interface: a standard OV7670 camera module is supported.

RGB Red, green and blue (RGB) light emitting diodes (LEDs), which may be controlled by pulse width modulation (PWM).

I/O All the pins on the ESP32 module are led out to the pin headers on the ESPWROVER-KIT. Users can program ESP32 to enable multiple functions such as PWM, ADC, DAC, I2C, I2S, SPI, etc.

Micro SD Card Micro SD card slot for data storage: when ESP32 enters the download mode, GPIO2 cannot be held high. However, a pull-up resistor is required on GPIO2 to enable the Micro SD Card. By default, GPIO2 and the pull-up resistor R153 are disconnected. To enable the SD Card, use jumpers on JP1 as shown in section *Setup Options*.

LCD ESP-WROVER-KIT supports mounting and interfacing a 3.2" SPI (standard 4-wire Serial Peripheral Interface) LCD, as shown on figure *ESP-WROVER-KIT board layout - back*.

Setup Options

There are five jumper headers available to set up the board functionality. Typical options to select from are listed in table below.

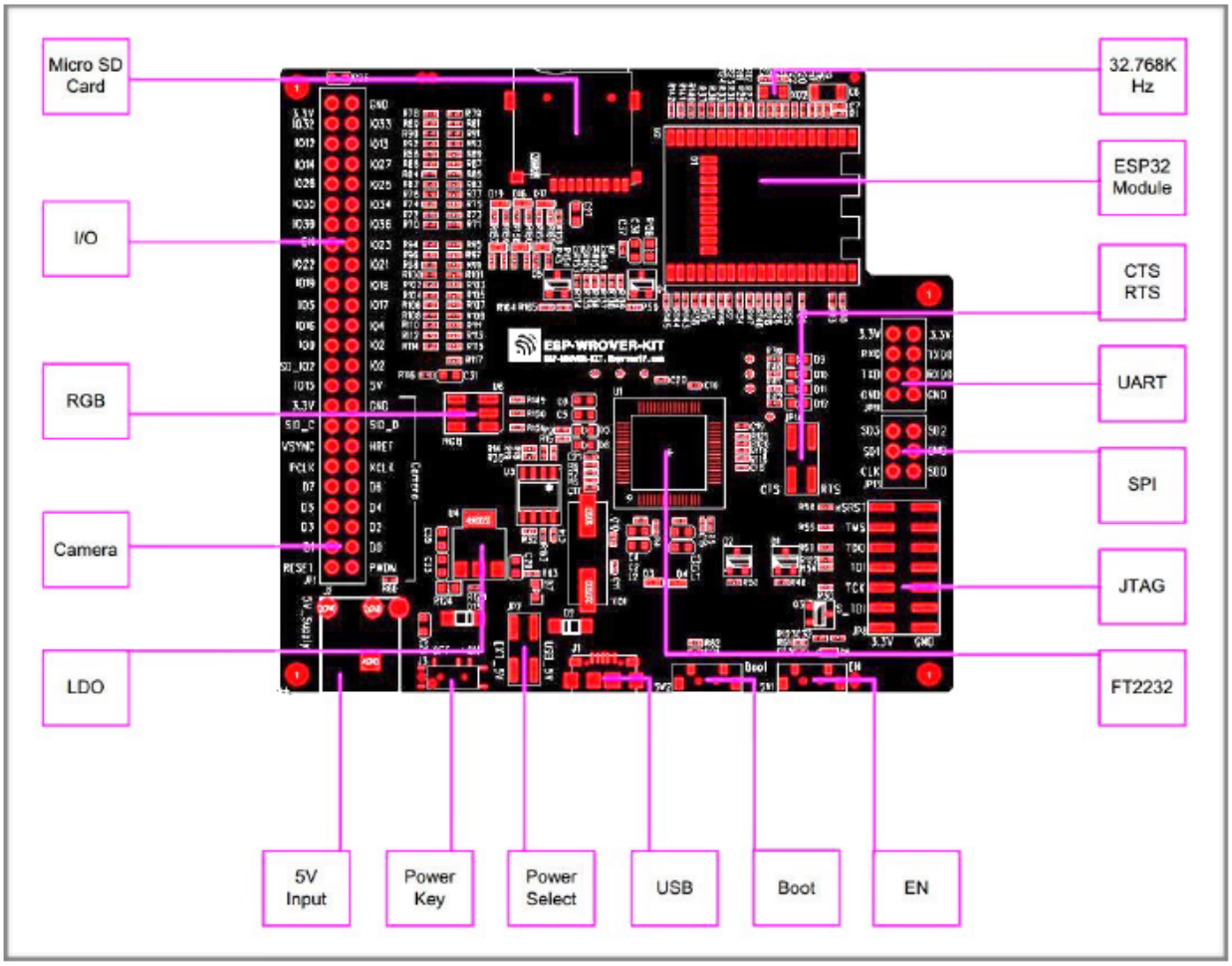

图 13: ESP-WROVER-KIT board layout - front

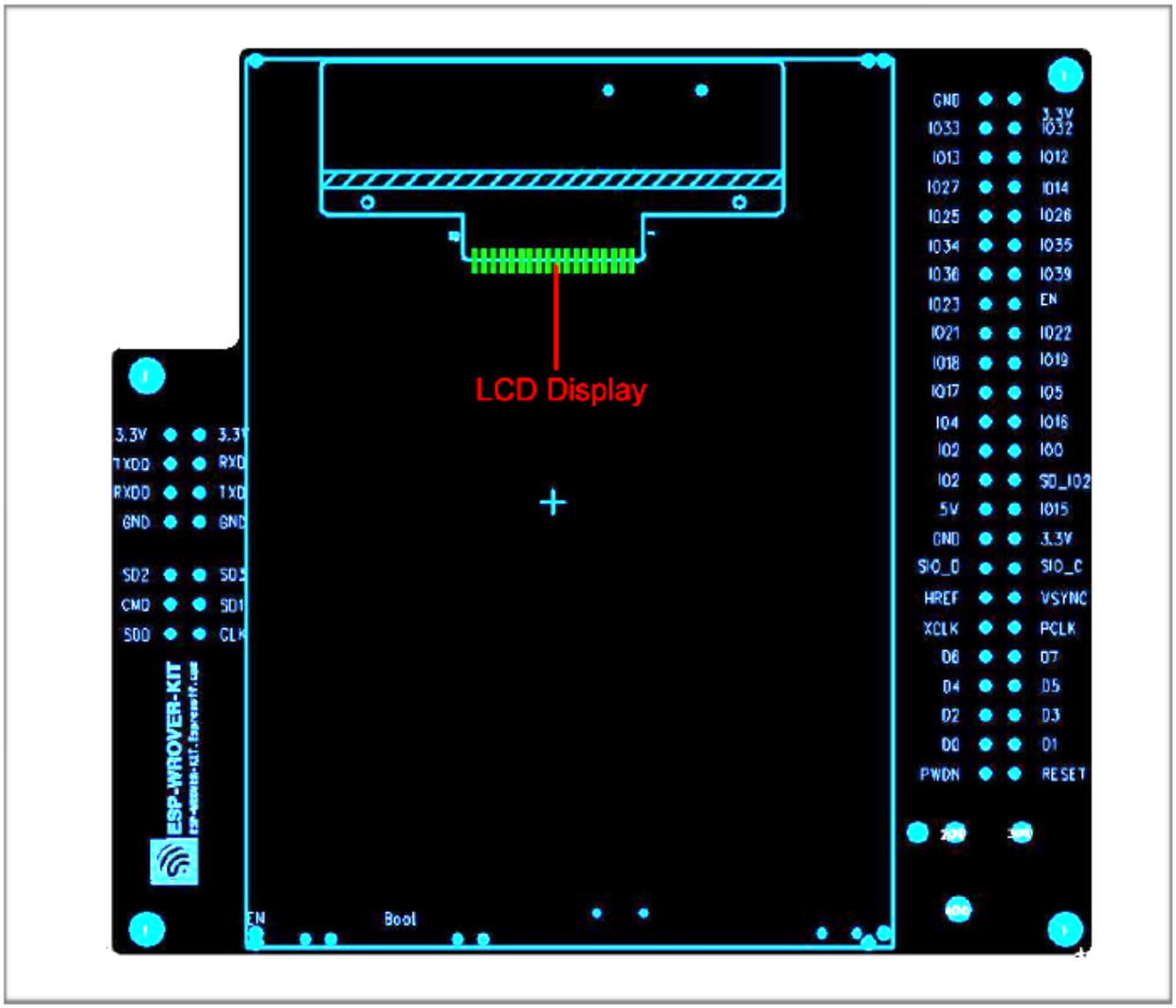

图 14: ESP-WROVER-KIT board layout - back

Header	Jumper Setting	Description of Functionality
JP1	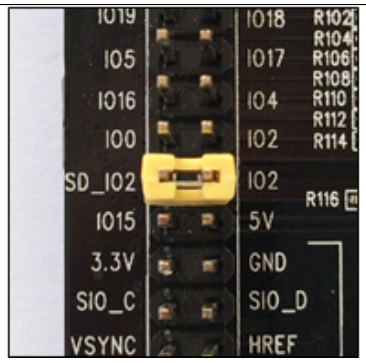	Enable pull up for the Micro SD Card
JP1	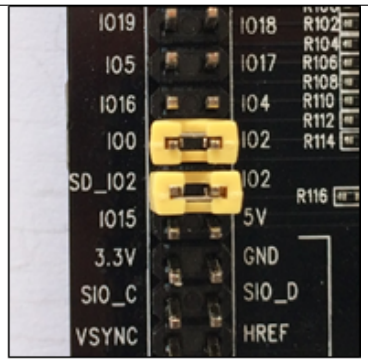	Assert GPIO2 low during each download (by jumping it to GPIO0)
JP7	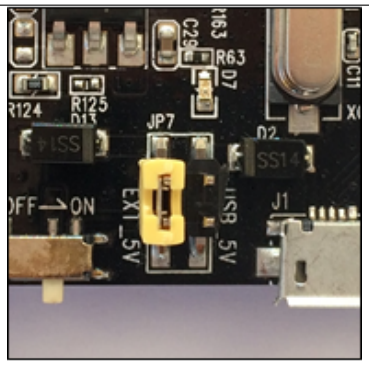	Power ESP-WROVER-KIT board from an external power supply
JP7	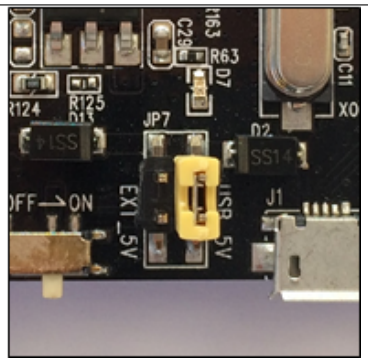	Power ESP-WROVER-KIT board from an USB port
	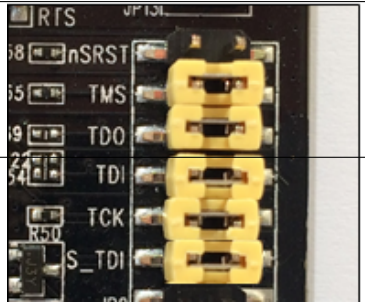	

Start Application Development

Before powering up the ESP-WROVER-KIT, please make sure that the board has been received in good condition with no obvious signs of damage.

Initial Setup

Select the source of power supply for the board by setting jumper JP7. The options are either USB port or an external power supply. For this application selection of USB port is sufficient. Enable UART communication by installing jumpers on JP11. Both selections are shown in table below.

Power up from USB port	Enable UART communication
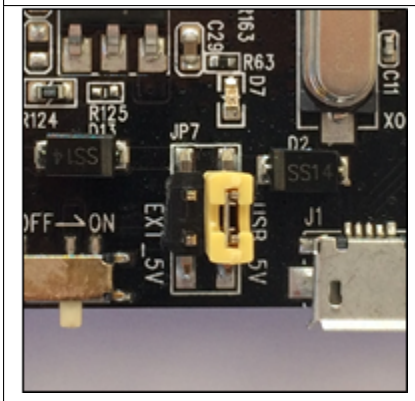	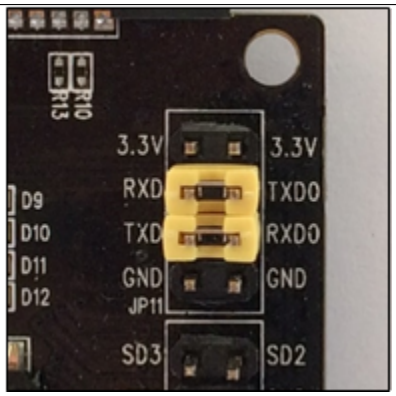

Do not install any other jumpers.

Now to Development

To start development of applications for ESP32-DevKitC, proceed to section 快速入门, that will walk you through the following steps:

- 设置工具链 in your PC to develop applications for ESP32 in C language
- 连接 the module to the PC and verify if it is accessible
- 编译和烧写 an example application to the ESP32
- 监视器 instantly what the application is doing

Related Documents

- ESP-WROVER-KIT V2 schematic (PDF)
- ESP32 Datasheet (PDF)
- ESP-WROOM-32 Datasheet (PDF)

- ESP32-WROVER Datasheet (PDF)
- *JTAG 调试*
- *ESP32 H/W 硬件参考*

1.3.3 ESP32-PICO-KIT V4 入门指南

[English]

本指南介绍了如何开始使用 ESP32-PICO-KIT V4 迷你开发板。有关 ESP32-PICO-KIT 其他版本的介绍，请见*ESP32 H/W 硬件参考*。

准备工作

- 1 × *ESP32-PICO-KIT V4 迷你开发板*
- 1 × USB A/Micro USB B 电缆
- 1 × PC（Windows、Linux 或 Mac OS 操作系统）

如果您希望直接开始使用 ESP32-PICO-KIT，请见章节应用程序开发.

简介

ESP32-PICO-KIT V4 是一款来自 乐鑫 的开发板，其核心采用了具有完整 Wi-Fi 和蓝牙功能的 ESP32 系列 SIP 模组 ESP32-PICO-D4。与其他 ESP32 系列模组相比，ESP32-PICO-D4 模组已将 40 MHz 晶体振荡器、4 MB flash、滤波电容及射频匹配链路等所有外围器件无缝集成进封装内，无需外围元器件即可工作。这将大大降低了用户额外采购元器件的数量和成本，及额外组装测试的复杂度。

ESP32-PICO-KIT V4 集成了一个 USB-UART 桥接电路，可连接至 PC 的 USB 端口进行下载和调试。

为了便于连接，ESP32-PICO-D4 上的所有 IO 信号和系统电源管脚均通过开发板两侧焊盘（每侧 20 个 x 0.1 英寸间隔）引出。为了方便杜邦线的使用，ESP32-PICO-KIT V4 开发板每侧的 20 个焊盘中，有 17 个引出至排母，另外 3 个靠近天线的焊盘未引出，可供用户日后焊接使用。

注解:

1. 每排未引出至排母的 3 个管脚已连接至 ESP32-PICO-D4 SIP 模组的内置 flash 模块。更多信息，请见相关文档 中的模组技术规格书。
2. 较早版本的 ESP32-PICO-D4 开发板默认采用排针。

ESP32-PICO-KIT V4 开发板的尺寸为 52 x 20.3 x 10 mm (2.1” x 0.8” x 0.4”)，具体请见开发板尺寸 章节。本迷你开发板的功能框图如下图所示。

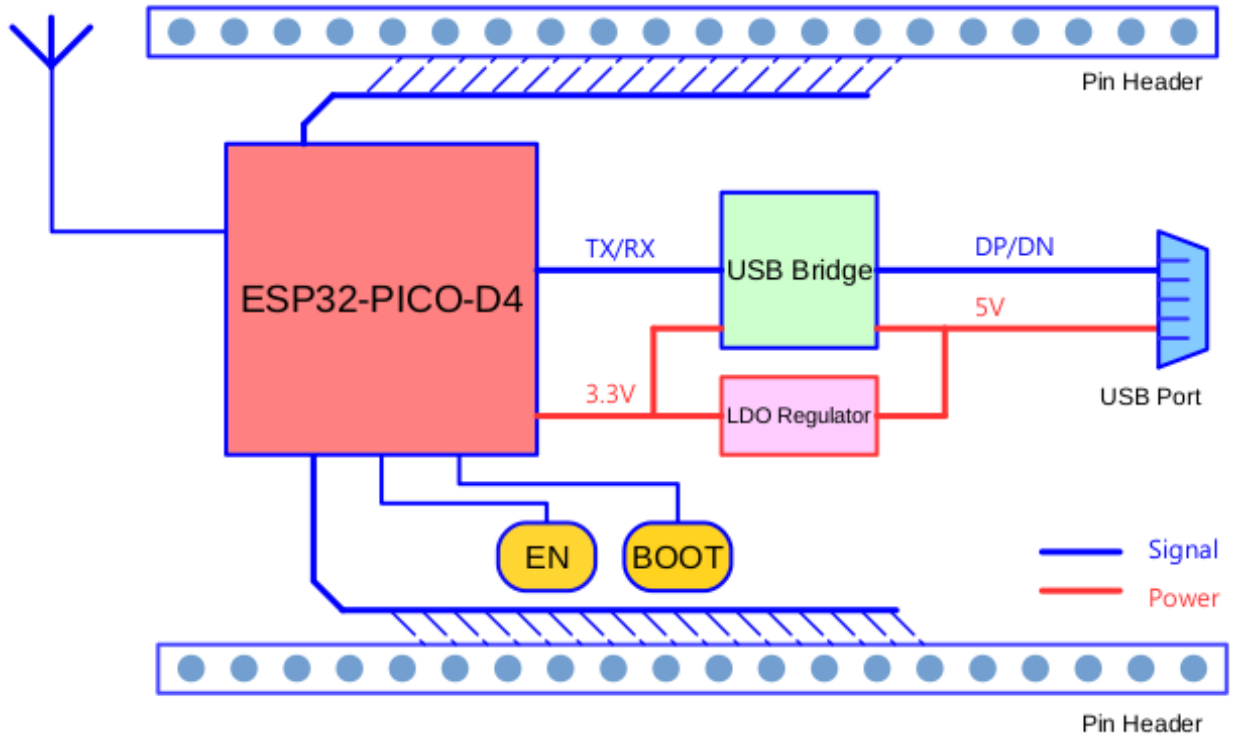

图 15: ESP32-PICO-KIT V4 功能框图

功能说明

ESP32-PICO-KIT V4 开发板的主要元件、接口及控制方式如下文所示。

ESP32-PICO-D4 ESP32-PICO-KIT V4 开发板上焊接的标准 ESP32-PICO-D4 模组，集成了 ESP32 芯片的完整系统，仅需连接天线、LC 匹配电路、退耦电容和 EN 信号上拉电阻即可正常工作。

LDO 5V-to-3.3V 低压差稳压器

USB-UART 桥接器 单芯片 USB-UART 桥接器，可提供高达 1 Mbps 的传输速率。

Micro USB 接口 USB 接口，可用作电路板的供电电源及连接 PC 端的通信接口。

LED 电源指示灯 当开发板通电后（USB 或外部 5 V），该指示灯将亮起。更多信息，请见相关文档 中的原理图。

I/O ESP32-PICO-D4 上的所有管脚均通过开发板的排母引出。用户可以对 ESP32 进行编程，实现 PWM、ADC、DAC、I2C、I2S、SPI 等多种功能。更多信息，请见章节管脚说明。

BOOT 键 按下 BOOT 键并保持，同时按一下 EN 键（此时不要松开 BOOT 键）进入固件下载模式，通过串口下载固件。

EN 键 复位键，可重置系统。

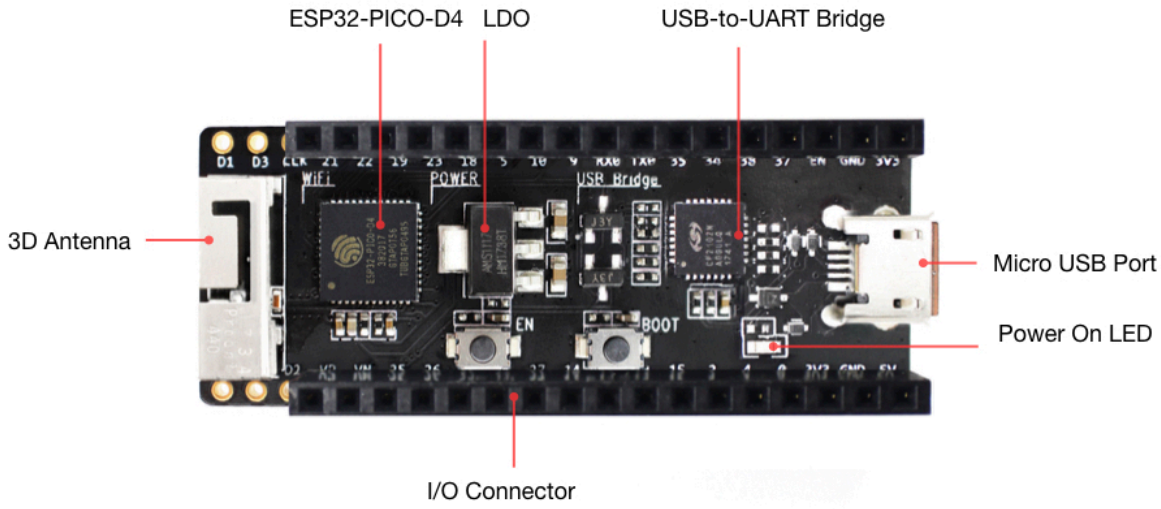

图 16: ESP32-PICO-KIT V4 开发板布局

电源选项

ESP32-PICO-KIT V4 支持以下几种供电模式：

1. Micro USB 接口供电（默认）
2. 5V/GND 管脚供电
3. 3V3/GND 管脚供电

> **警告：** 上述供电模式不可同时连接，否则可能会损坏电路板和/或电源。

应用程序开发

在 ESP32-PICO-KIT V4 上电前，请首先确认电路板完好无损。

有关应用程序开发的具体步骤，请见章节快速入门：

- 设置 *Toolchain*，以便用 C 语言开发应用
- 连接 模组至 PC，并确认访问状态
- 构建并向 *ESP32* 烧录 *example*
- 即刻监测 应用程序的动作

管脚说明

下表介绍了开发板 I/O 管脚的 **名称**和 **功能**，具体布局请见相关文档 中的原理图。请参考*ESP32-PICO-KIT V4 开发板布局* 。

Header J2

编号	名称	类型	功能
1	FLASH_SD1 (FSD1)	I/O	GPIO8, SD_DATA1, SPID, HS1_DATA1 *(1)* , U2CTS
2	FLASH_SD3 (FSD3)	I/O	GPIO7, SD_DATA0, SPIQ, HS1_DATA0 *(1)* , U2RTS
3	FLASH_CLK (FCLK)	I/O	GPIO11, SD_CMD, SPICS0, HS1_CMD *(1)* , U1RTS
4	IO21	I/O	GPIO21, VSPIHD, EMAC_TX_EN
5	IO22	I/O	GPIO22, VSPIWP, U0RTS, EMAC_TXD1
6	IO19	I/O	GPIO19, VSPIQ, U0CTS, EMAC_TXD0
7	IO23	I/O	GPIO23, VSPID, HS1_STROBE
8	IO18	I/O	GPIO18, VSPICLK, HS1_DATA7
9	IO5	I/O	GPIO5, VSPICS0, HS1_DATA6,

Header J3

编号	名称	类型	功能
1	FLASH_CS (FCS)	I/O	GPIO16, HS1_DATA4 *(1)* , U2RXD, EMAC_CLK_OUT
2	FLASH_SD0 (FSD0)	I/O	GPIO17, HS1_DATA5 *(1)* , U2TXD, EMAC_CLK_OUT_180
3	FLASH_SD2 (FSD2)	I/O	GPIO6, SD_CLK, SPICLK, HS1_CLK *(1)* , U1CTS
4	SENSOR_VP (FSVP)	I	GPIO36, ADC1_CH0, ADC_PRE_AMP *(2a)* , RTC_GPIO0
5	SENSOR_VN (FSVN)	I	GPIO39, ADC1_CH3, ADC_PRE_AMP *(2b)* , RTC_GPIO3
6	IO25	I/O	GPIO25, DAC_1, ADC2_CH8, RTC_GPIO6, EMAC_RXD0
7	IO26	I/O	GPIO26, DAC_2, ADC2_CH9, RTC_GPIO7, EMAC_RXD1

8	IO32	I/O	32K_XP *(3a)* ,

备注

1. 该管脚已连接至 ESP32-PICO-D4 的内置 flash 管脚。
2. 当用作 ADC_PRE_AMP 时，请在以下位置增加 270 pF 电容：(a) SENSOR_VP 和 IO37 之间；(b) SENSOR_VN 和 IO38 之间。
3. 32.768 kHz 晶振：(a) 输入；(b) 输出。
4. 该管脚已连接至开发板的 USB 桥接器芯片。
5. ESP32-PICO-KIT 内置 SPI flash 的工作电压为 3.3V。因此，strapping 管脚 MTDI 在模组重启过程中应保持低电平。

开发板尺寸

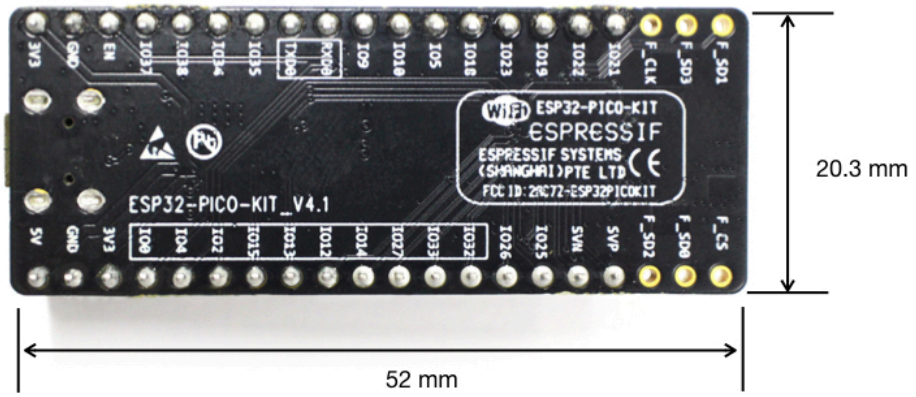

图 17: ESP32-PICO-KIT V4 尺寸图 - 背面

相关文档

- ESP32-PICO-KIT V4 原理图 (PDF)
- ESP32-PICO-D4 技术规格书 (PDF)
- *ESP32 H/W 硬件参考*

ESP32-PICO-KIT V3 Getting Started Guide

This user guide shows how to get started with the ESP32-PICO-KIT V3 mini development board. For description of other versions of the ESP32-PICO-KIT check *ESP32 H/W 硬件参考*.

What You Need

- 1 × ESP32-PICO-KIT V3 mini development board
- 1 × USB A / Micro USB B cable
- 1 × PC loaded with Windows, Linux or Mac OS

Overview

ESP32-PICO-KIT V3 is a mini development board based on the ESP32-PICO-D4 SIP module produced by Espressif. All the IO signals and system power on ESP32-PICO-D4 are led out through two standard 20 pin x 0.1" pitch headers on both sides for easy interfacing. The development board integrates a USB-UART Bridge circuit, allowing the developers to connect the development board to a PC' s USB port for downloads and debugging.

Functional Description

The following list and figure below describe key components, interfaces and controls of ESP32-PICO-KIT V3 board.

ESP32-PICO-D4 Standard ESP32-PICO-D4 module soldered to the ESP32-PICO-KIT V3 board. The complete system of the ESP32 chip has been integrated into the SIP module, requiring only external antenna with LC matching network, decoupling capacitors and pull-up resistors for EN signals to function properly.

USB-UART Bridge A single chip USB-UART bridge provides up to 1 Mbps transfers rates.

I/O All the pins on ESP32-PICO-D4 are broken out to the pin headers on the board. Users can program ESP32 to enable multiple functions such as PWM, ADC, DAC, I2C, I2S, SPI, etc.

Micro USB Port USB interface. It functions as the power supply for the board and the communication interface between PC and ESP32-PICO-KIT V3.

EN Button Reset button; pressing this button resets the system.

BOOT Button Holding down the Boot button and pressing the EN button initiates the firmware download mode. Then user can download firmware through the serial port.

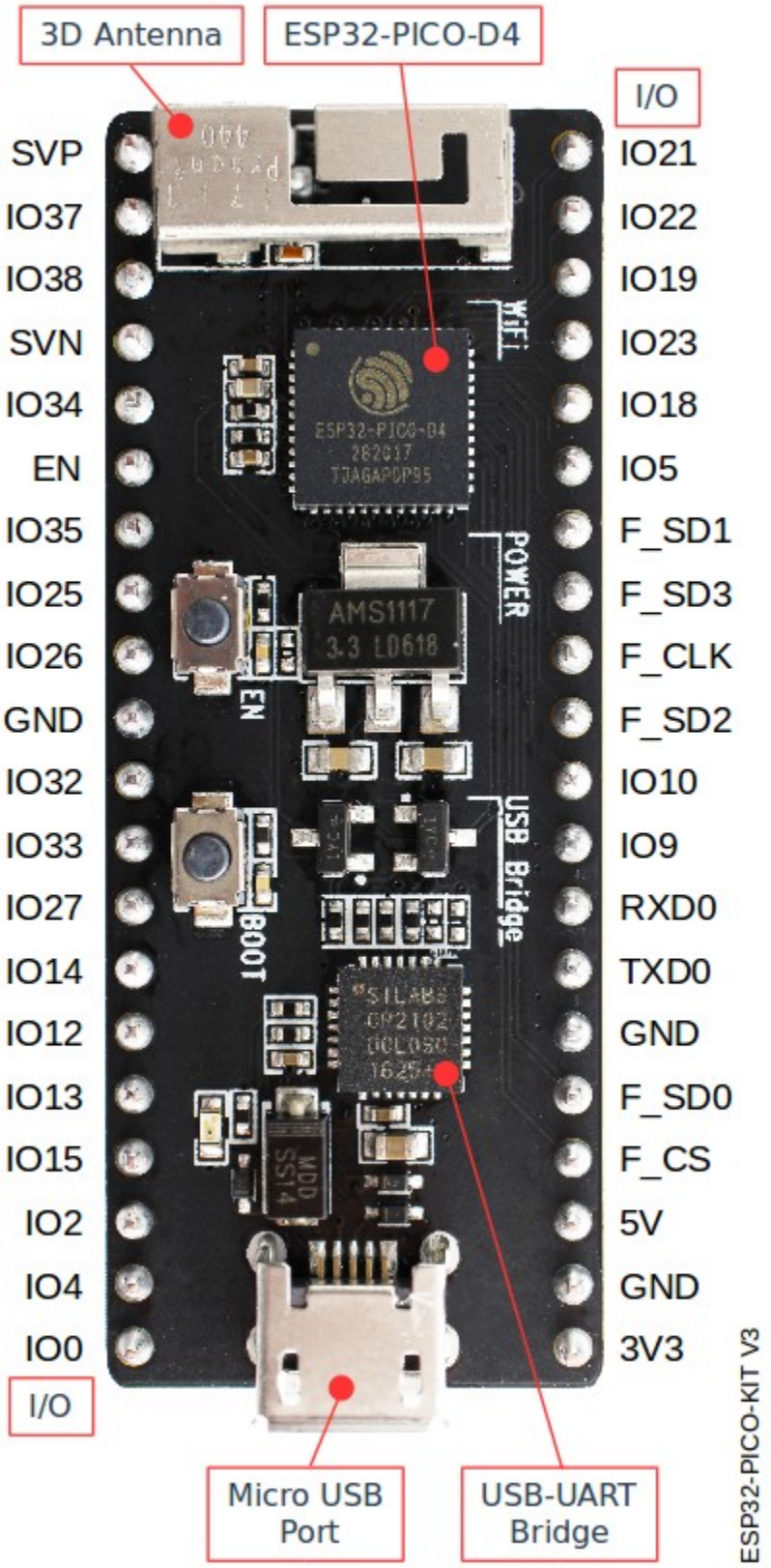

图 18: ESP32-PICO-KIT V3 board layout

Start Application Development

Before powering up the ESP32-PICO-KIT V3, please make sure that the board has been received in good condition with no obvious signs of damage.

To start development of applications, proceed to section 快速入门, that will walk you through the following steps:

- 设置工具链 in your PC to develop applications for ESP32 in C language
- 连接 the module to the PC and verify if it is accessible
- 编译和烧写 an example application to the ESP32
- 监视器 instantly what the application is doing

Related Documents

- ESP32-PICO-KIT V3 schematic (PDF)
- ESP32-PICO-D4 Datasheet (PDF)
- *ESP32 H/W 硬件参考*

如果你使用其它开发板，请查看下面的内容。

1.4 设置工具链

用 ESP32 进行开发最快的方法是安装预编译的工具链。请根据你的操作系点击对应的链接，并按照链接中的指导进行安装。

1.4.1 Windows 平台工具链的标准设置

[English]

重要： 对不起，CMake-based Build System Preview 还没有中文翻译。

引言

Windows 没有内置的“make”环境，因此如果要安装工具链，你需要一个 GNU 兼容环境。我们这里使用 MSYS2 来提供该环境。你不需要一直使用这个环境（你可以使用*Eclipse* 或其它前端工具），但是它是在后台运行的。

工具链的设置

快速设置的方法是从 dl.espressif.com 下载集成在一起的工具链和 MSYS2 压缩文件：

https://dl.espressif.com/dl/esp32_win32_msys2_environment_and_toolchain_idf3-20201104.zip

将 zip 压缩文件解压到 `C:\` (或其它路径，这里假设是 `C:\`)，它会使用预先准备的环境创建一个 `msys32` 目录。

检出

运行 `C:\msys32\mingw32.exe` 打开一个 MSYS2 的终端窗口。该窗口的环境是一个 bash shell。创建一个 `esp` 目录作为开发 ESP32 应用的默认地址。运行指令

```
mkdir -p ~/esp
```

输入 `cd ~/esp` 就进入到新创建的目录。如果没有错误信息出现则表明此步骤已完成。

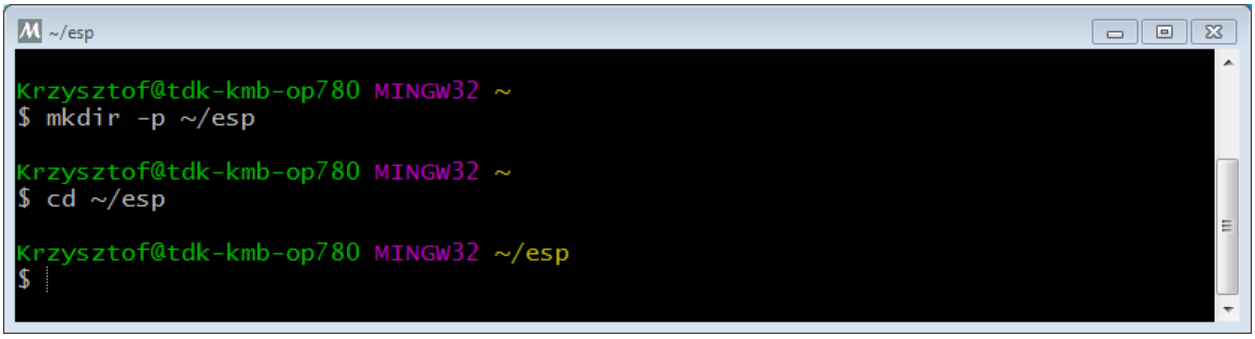

图 19: MSYS2 终端窗口

后续步骤将会使用这个窗口来为 ESP32 设置开发环境。

后续步骤

要继续设置开发环境，请参考*获取 ESP-IDF* 一节。

更新环境

当 IDF 更新时，有时需要新的工具链，或者将新的需求添加到 Windows MSYS2 环境中。要将旧版本的预编译环境中的数据移动到新版本：

- 把旧的 MSYS2 环境（即 `C:\msys32`）移动/重命名为不同的目录（即 `C:\msys32_old`）。
- 按照前文所述步骤下载新的预编译环境。
- 将新的 MSYS2 环境解压缩到 `C:\msys32` （或其他位置）。

- 找到旧的 `C:\msys32_old\home` 目录并把它移到 `C:\msys32`。
- 如果你不再需要 `C:\msys32_old` 可以将它删除。

你可以在系统上拥有独立的不同的 MSYS2 环境，前提是在不同的目录中。

相关文档

Setup Windows Toolchain from Scratch

Setting up the environment gives you some more control over the process, and also provides the information for advanced users to customize the install. The *pre-built environment*, addressed to less experienced users, has been prepared by following these steps.

To quickly setup the toolchain in standard way, using a prebuilt environment, proceed to section *Windows 平台工具链的标准设置*.

Configure Toolchain & Environment from Scratch

This process involves installing MSYS2, then installing the MSYS2 and Python packages which ESP-IDF uses, and finally downloading and installing the Xtensa toolchain.

- Navigate to the MSYS2 installer page and download the `msys2-i686-xxxxxxx.exe` installer executable (we only support a 32-bit MSYS environment, it works on both 32-bit and 64-bit Windows.) At time of writing, the latest installer is `msys2-i686-20161025.exe`.
- Run through the installer steps. **Uncheck the "Run MSYS2 32-bit now" checkbox at the end.**
- Once the installer exits, open Start Menu and find "MSYS2 MinGW 32-bit" to run the terminal.

  (Why launch this different terminal? MSYS2 has the concept of different kinds of environments. The default "MSYS" environment is Cygwin-like and uses a translation layer for all Windows API calls. We need the "MinGW" environment in order to have a native Python which supports COM ports.)
- The ESP-IDF repository on github contains a script in the tools directory titled `windows_install_prerequisites.sh`. If you haven't got a local copy of the ESP-IDF yet, that's OK - you can just download that one file in Raw format from here: tools/windows/windows_install_prerequisites.sh. Save it somewhere on your computer.
- Type the path to the shell script into the MSYS2 terminal window. You can type it as a normal Windows path, but use forward-slashes instead of back-slashes. ie: `C:/Users/myuser/Downloads/windows_install_prerequisites.sh`. You can read the script beforehand to check what it does.
- The `windows_install_prerequisites.sh` script will download and install packages for ESP-IDF support, and the ESP32 toolchain.

Troubleshooting

- While the install script runs, MSYS may update itself into a state where it can no longer operate. You may see errors like the following:

```
*** fatal error - cygheap base mismatch detected - 0x612E5408/0x612E4408. This␣
↪problem is probably due to using incompatible versions of the cygwin DLL.
```

  If you see errors like this, close the terminal window entirely (terminating the processes running there) and then re-open a new terminal. Re-run `windows_install_prerequisites.sh` (tip: use the up arrow key to see the last run command). The update process will resume after this step.

- MSYS2 is a "rolling" distribution so running the installer script may install newer packages than what is used in the prebuilt environments. If you see any errors that appear to be related to installing MSYS2 packages, please check the MSYS2-packages issues list for known issues. If you don't see any relevant issues, please raise an IDF issue.

MSYS2 Mirrors in China

There are some (unofficial) MSYS2 mirrors inside China, which substantially improves download speeds inside China.

To add these mirrors, edit the following two MSYS2 mirrorlist files before running the setup script. The mirrorlist files can be found in the `/etc/pacman.d` directory (i.e. `c:\msys2\etc\pacman.d`).

Add these lines at the top of `mirrorlist.mingw32`:

```
Server = https://mirrors.ustc.edu.cn/msys2/mingw/i686/
Server = http://mirror.bit.edu.cn/msys2/REPOS/MINGW/i686
```

Add these lines at the top of `mirrorlist.msys`:

```
Server = http://mirrors.ustc.edu.cn/msys2/msys/$arch
Server = http://mirror.bit.edu.cn/msys2/REPOS/MSYS2/$arch
```

HTTP Proxy

You can enable an HTTP proxy for MSYS and PIP downloads by setting the `http_proxy` variable in the terminal before running the setup script:

```
export http_proxy='http://http.proxy.server:PORT'
```

Or with credentials:

```
export http_proxy='http://user:password@http.proxy.server:PORT'
```

Add this line to `/etc/profile` in the MSYS directory in order to permanently enable the proxy when using MSYS.

Alternative Setup: Just download a toolchain

If you already have an MSYS2 install or want to do things differently, you can download just the toolchain here:

https://dl.espressif.com/dl/xtensa-esp32-elf-win32-1.22.0-97-gc752ad5-5.2.0.zip

---

注解: If you followed instructions *Configure Toolchain & Environment from Scratch*, you already have the toolchain and you won't need this download.

重要: Just having this toolchain is *not enough* to use ESP-IDF on Windows. You will need GNU make, bash, and sed at minimum. The above environments provide all this, plus a host compiler (required for menuconfig support).

Next Steps

To carry on with development environment setup, proceed to section 获取 *ESP-IDF*.

Updating The Environment

When IDF is updated, sometimes new toolchains are required or new system requirements are added to the Windows MSYS2 environment.

Rather than setting up a new environment, you can update an existing Windows environment & toolchain:

- Update IDF to the new version you want to use.
- Run the `tools/windows/windows_install_prerequisites.sh` script inside IDF. This will install any new software packages that weren't previously installed, and download and replace the toolchain with the latest version.

The script to update MSYS2 may also fail with the same errors mentioned under *Troubleshooting*.

If you need to support multiple IDF versions concurrently, you can have different independent MSYS2 environments in different directories. Alternatively you can download multiple toolchains and unzip these to different directories, then use the PATH environment variable to set which one is the default.

1.4.2 Linux 平台工具链的标准设置

[English]

重要： 对不起，CMake-based Build System Preview 还没有中文翻译。

安装前提

编译 ESP-IDF 需要以下软件包：

- CentOS 7:

```
sudo yum -y update && sudo yum install git wget flex bison gperf python3
```

目前仍然支持 CentOS 7，但为了更好的用户体验，建议使用 CentOS 8。

- Ubuntu and Debian:

```
sudo apt-get install git wget flex bison gperf python3 python3-pip python3-
↪setuptools cmake ninja-build ccache libffi-dev libssl-dev
```

- Arch:

```
sudo pacman -S --needed gcc git make ncurses flex bison gperf
```

注解： 一些旧的（2014 年之前）Linux 发行版中使用的 `pyserial` 版本可能是 2.x ，ESP-IDF 并不支持。在这种情况下，请参考*安装依赖的 Python 软件包* 章节，通过 `pip` 工具来安装支持的版本。

工具链的设置

Linux 版的 ESP32 工具链可以从 Espressif 的网站下载：

- 64-bit Linux：

  https://dl.espressif.com/dl/xtensa-esp32-elf-linux64-1.22.0-97-gc752ad5-5.2.0.tar.gz

- 32-bit Linux：

  https://dl.espressif.com/dl/xtensa-esp32-elf-linux32-1.22.0-97-gc752ad5-5.2.0.tar.gz

1. 下载完成后，将它解压到 `~/esp` 目录：：

   - 64-bit Linux:

```
mkdir -p ~/esp
cd ~/esp
tar -xzf ~/Downloads/xtensa-esp32-elf-linux64-1.22.0-97-gc752ad5-5.2.0.tar.gz
```

- 32-bit Linux:

```
mkdir -p ~/esp
cd ~/esp
tar -xzf ~/Downloads/xtensa-esp32-elf-linux32-1.22.0-97-gc752ad5-5.2.0.tar.gz
```

2. 工具链将会被解压到 ~/esp/xtensa-esp32-elf/ 目录。

   要使用工具链，你还需要在 ~/.profile 文件中更新环境变量 PATH。要使 xtensa-esp32-elf 在所有的终端会话中都有效，需要将下面这一行代码添加到你的 ~/.profile 文件中：

```
export PATH="$HOME/esp/xtensa-esp32-elf/bin:$PATH"
```

   或者你也可以给上面的命令创建一个别名。这样做的好处是，你只在需要使用它的时候才获取工具链。将下面这行代码添加到 ~/.profile 文件中即可：

```
alias get_esp32='export PATH="$HOME/esp/xtensa-esp32-elf/bin:$PATH"'
```

   然后，当你需要使用工具链时，在命令行输入 get_esp32，然后工具链会自动添加到你的 PATH 中。

   注解： 如果将 /bin/bash 设置为登录 shell，且同时存在 .bash_profile 和 .profile，则更新 .bash_profile 。在 CentOS 环境下，alias 需要添加到 .bashrc 文件中。

3. 退出并重新登录以使 .profile 更改生效。运行以下命令来检查 PATH 设置是否正确：

```
   printenv PATH

检查字符串的开头是否包含类似的工具链路径::

   $ printenv PATH
   /home/user-name/esp/xtensa-esp32-elf/bin:/home/user-name/bin:/home/user-name/.
↪local/bin:/usr/local/sbin:/usr/local/bin:/usr/sbin:/usr/bin:/sbin:/bin:/usr/
↪games:/usr/local/games:/snap/bin

 除了 ``/home/user-name``，应该有具体的安装的主路径。
```

权限问题 /dev/ttyUSB0

某些 Linux 版本可能在烧写 ESP32 时会出现 `Failed to open port /dev/ttyUSB0` 错误消息。可以通过将当前用户添加到拨出组来解决。

Arch Linux 用户

在 Arch 中运行预编译的 gdb (xtensa-esp32-elf-gdb) 需要 ncurses 5，但是 Arch 使用的是 ncurses 6。在 AUR 中向下兼容的库文件，可用于本地和 lib32 的配置：

- https://aur.archlinux.org/packages/ncurses5-compat-libs/
- https://aur.archlinux.org/packages/lib32-ncurses5-compat-libs/

在安装这些软件包之前，你可能需要将作者的公钥添加到你的钥匙圈中，上面链接中的“Comments”部分有所叙述。

或者，你也可以使用 crosstool-NG 编译一个链接 ncurses 6 的 gdb。

设置 Python 3 为 CentOS 默认 Python 版本

CentOS 7 及更早的版本提供 Python 2.7 作为默认解释器。但这里推荐使用 Python 3，您可以运行下方命令安装 Python 3。或者查看当前所用系统的相关文档，按照文档推荐的其它方法安装 Python 3:

```
sudo yum -y update && sudo yum install python3 python3-pip python3-setuptools
```

设置 Python 3 为默认 Python 版本:

```
sudo update-alternatives --install /usr/bin/python python /usr/bin/python3 10 && alias␣
↪pip=pip3
```

设置 Python 3 为 Ubuntu 和 Debian 默认 Python 版本

Ubuntu（v18.04 及之前的版本）和 Debian（v9 及之前的版本）的默认解释器为 Python 2.7，但这里推荐使用 Python 3，您可以运行下方命令安装 Python 3。或者查看当前所用系统的相关文档，按照文档推荐的其它方法安装 Python 3:

```
sudo apt-get install python3 python3-pip python3-setuptools
```

设置 Python 3 为默认 Python 版本:

```
sudo update-alternatives --install /usr/bin/python python /usr/bin/python3 10 && alias␣
↪pip=pip3
```

注解: 上述设置为全局设置，同时会影响到其它应用。

修复 Ubuntu 16.04 损坏的 pip

python3-pip 包可能已损坏无法升级。需使用脚本 get-pip.py 手动删除并安装该包:

```
apt remove python3-pip python3-virtualenv; rm -r ~/.local
rm -r ~/.espressif/python_env && python get-pip.py
```

停用 Python 2

Python 2 已经 结束生命周期，ESP-IDF 很快将不再支持 Python 2。请安装 Python 3.6 或以上版本。可参考上面列出的目前主流 Linux 发行版的安装说明。

后续步骤

要继续设置开发环境，请参考*获取 ESP-IDF* 一节。

1.4.3 在 Mac OS 上安装 ESP32 工具链

[English]

重要: 对不起，CMake-based Build System Preview 还没有中文翻译。

安装准备

- 安装 pip:

  ```
  sudo easy_install pip
  ```

注解: pip 稍后将用于安装*必要的 Python 软件包*。

安装工具链

Mac OS 版本的 ESP32 工具链可以从以下地址下载:

https://dl.espressif.com/dl/xtensa-esp32-elf-macos-1.22.0-97-gc752ad5-5.2.0.tar.gz

下载压缩文件之后，解压到 ~/esp 目录中:

```
mkdir -p ~/esp
cd ~/esp
tar -xzf ~/Downloads/xtensa-esp32-elf-macos-1.22.0-97-gc752ad5-5.2.0.tar.gz
```

工具链将被解压到 ~/esp/xtensa-esp32-elf/ 路径下。

在 ~/.profile 文件中更新 PATH 环境变量以使用工具链。为了使 xtensa-esp32-elf 在各种终端会话中都可用，在 ~/.profile 文件中加上以下指令:

```
export PATH=$HOME/esp/xtensa-esp32-elf/bin:$PATH
```

或者，您可以为上述命令创建一个别名。这样只有执行以下指令时工具链才能被使用。将下面的指令添加到您的 🄵/ .profile 文件中:

```
alias get_esp32="export PATH=$HOME/esp/xtensa-esp32-elf/bin:$PATH"
```

当需要使用工具链时，在命令行里输入 get_esp32，就可以将工具链添加到 PATH 中。

停用 Python 2

Python 2 已经 结束生命周期，ESP-IDF 很快将不再支持 Python 2。请安装 Python 3.6 或以上版本。可参考上面列出的 macOS 安装说明。

下一步

前往获取 *ESP-IDF* 继续配置开发环境。

相关文档

从零开始设置 macOS 环境下的工具链

[English]

注解: 安装工具链的标准流程可以通过阅读文档在 *MacOS* 上安装 *ESP32* 工具链 来获得，工具链的自定义设置 章节会介绍哪些情况下我们必须要重新定义工具链。

安装必要的工具

- 安装 pip:

```
sudo easy_install pip
```

注解: pip 稍后将用于安装*必要的 Python 软件包*。

从源代码编译工具链

- 安装依赖:
  - 安装 MacPorts 或者 homebrew 包管理器。MacPorts 需要安装完整的 XCode 软件，但是 homebrew 只需要安装 XCode 命令行工具即可。
  - 对于 MacPorts:

```
sudo port install gsed gawk binutils gperf grep gettext wget libtool autoconf␣
↪automake
```

  - 对于 homebrew:

```
brew install gnu-sed gawk binutils gperftools gettext wget help2man libtool␣
↪autoconf automake
```

创建大小写敏感的文件系统镜像:

```
hdiutil create ~/esp/crosstool.dmg -volname "ctng" -size 10g -fs "Case-sensitive HFS+"
```

挂载:

```
hdiutil mount ~/esp/crosstool.dmg
```

创建指向你工作目录的符号链接:

```
mkdir -p ~/esp
ln -s /Volumes/ctng ~/esp/ctng-volume
```

进入新创建的工作目录:

```
cd ~/esp/ctng-volume
```

下载 crosstool-NG 然后编译:

```
git clone -b xtensa-1.22.x https://github.com/espressif/crosstool-NG.git
cd crosstool-NG
./bootstrap && ./configure --enable-local && make install
```

编译工具链:

```
./ct-ng xtensa-esp32-elf
./ct-ng build
chmod -R u+w builds/xtensa-esp32-elf
```

编译得到的工具链会被保存到 `~/esp/ctng-volume/crosstool-NG/builds/xtensa-esp32-elf`。根据*Mac OS 下设置环境变量的标准方法* 中的介绍，将工具链添加到 `PATH` 中。

停用 Python 2

Python 2 已经 结束生命周期，ESP-IDF 很快将不再支持 Python 2。请安装 Python 3.6 或以上版本。可参考上面列出的 macOS 安装说明。

下一步

继续设置开发环境，请前往*获取 ESP-IDF* 章节。

Windows	Linux	Mac OS

注解： 我们使用 `~/esp` 目录来安装预编译的工具链、ESP-IDF 和示例程序。你也可以使用其它目录，但是需要注意调整相应的指令。

你可以安装预编译的工具链或者自定义你的环境，这完全取决于个人经验和偏好。如果你要自定义环境，请参考*Customized Setup of Toolchain*。

工具链设置完成后，就可以*获取 ESP-IDF* 了。

1.5 获取 ESP-IDF

工具链（包括用于编译和构建应用程序的程序）安装完后，你还需要 ESP32 相关的 API/库。API/库在 ESP-IDF 仓库 中。

获取本地副本：打开终端，切换到你要存放 ESP-IDF 的工作目录，使用 `git clone` 命令克隆远程仓库:

```
cd ~/esp
git clone -b release/v3.3 --recursive https://github.com/espressif/esp-idf.git
```

ESP-IDF 将会被下载到 `~/esp/esp-idf` 目录下。

有关在给定情况下使用哪个 ESP-IDF 版本的信息，请参阅*ESP-IDF Versions* 。

注解： 注意这里有个 `--recursive` 选项。如果你克隆 ESP-IDF 时没有带这个选项，你还需要运行额外的命令来获取子模块:

```
cd esp-idf
git submodule update --init
```

注解： `git clone` 命令的 `-b release/v3.3` 选项告诉 git 从 ESP-IDF 仓库中克隆与此版本的文档对应的分支。

注解： GitHub 中”下载 zip 文档”的功能不适用于 ESP-IDF，所以需要使用 `git clone` 命令。作为备份，可以在没有安装 Git 的环境中下载 Stable version 的 zip 归档文件。

1.6 设置 ESP-IDF 路径

工具链程序使用环境变量 `IDF_PATH` 来访问 ESP-IDF。这个变量应该设置在你的 PC 中，否则工程将不能编译。你可以在每次 PC 重启时手工设置，也可以通过在用户配置文件中定义 `IDF_PATH` 变量来永久性设置。要永久性设置，请参考*在用户配置文件中添加 IDF_PATH* 文档中*Windows* 或*Linux and MacOS* 相关的指导进行操作。

1.7 安装依赖的 Python 软件包

ESP-IDF 所依赖的 Python 软件包位于 `$IDF_PATH/requirements.txt` 文件中，您可以通过运行以下命令来安装它们:

```
python -m pip install --user -r $IDF_PATH/requirements.txt
```

注解: 请调用 ESP-IDF 使用的相同版本的 Python 解释器，解释器的版本号可以通过运行命令 `python --version` 来获得，根据结果，您可能要使用 `python2`, `python2.7` 或者类似的名字而不是 `python`, 例如:

```
python2.7 -m pip install --user -r $IDF_PATH/requirements.txt
```

1.8 创建一个工程

现在可以开始创建 ESP32 应用程序了。为了快速开始，我们这里以 IDF 的 examples 目录下的 get-started/hello_world 工程为例进行说明。

将 get-started/hello_world 拷贝到 `~/esp` 目录:

```
cd ~/esp
cp -r $IDF_PATH/examples/get-started/hello_world .
```

ESP-IDF 的 examples 目录下有一系列示例工程，都可以按照上面的方法进行创建。

重要: esp-idf 构建系统不支持在路径中存在空格。

1.9 连接

还有几个步骤就完成了。在继续后续操作前，先将 ESP32 开发板连接到 PC，然后检查串口号，看看它能否正常通信。如果你不知道如何操作，请查看 Establish Serial Connection with ESP32 中的相关指导。请注意一下端口号，我们在下一步中会用到。

1.10 配置

在终端窗口中，输入 `cd ~/esp/hello_world` 进入 `hello_world` 所在目录，然后启动工程配置工具 `menuconfig`:

```
cd ~/esp/hello_world
make menuconfig
```

如果之前的步骤都正确，则会显示下面的菜单:

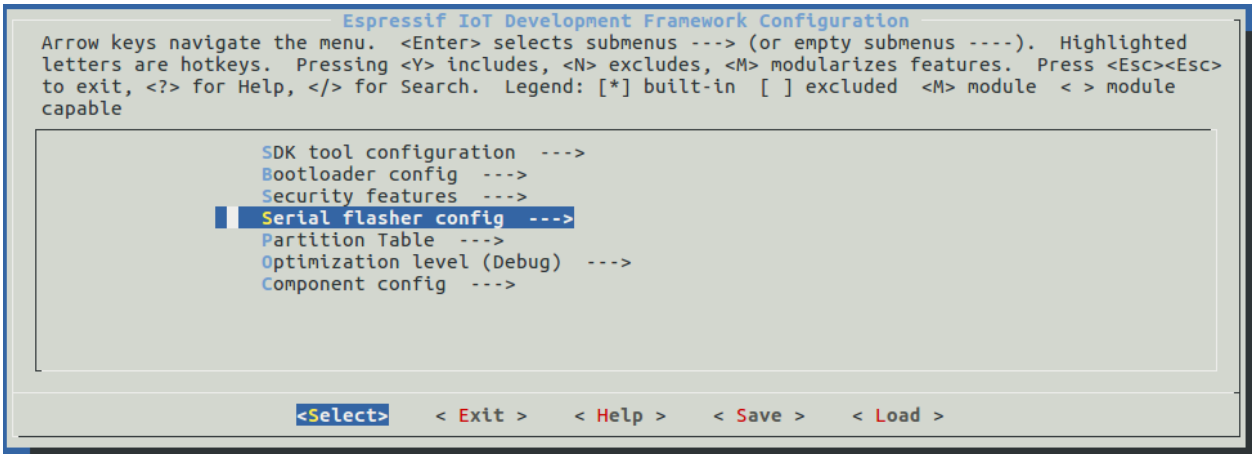

图 20: 工程配置 - 主窗口

在菜单中，进入 `Serial flasher config` > `Default serial port` 配置串口（工程将会加载到该串口上）。输入回车确认选择，选择 `< Save >` 保存配置，然后选择 `< Exit >` 退出应用程序。

注解： 在 Windows 系统中，端口号的名称类似 COM1，在 MacOS 中以 `/dev/cu.` 开始，而在 Linux 系统中，以 `/dev/tty` 开始。(详细内容可以参考章节*与 ESP32 创建串口连接*。)

下面是一些使用 `menuconfig` 的小技巧：

- 使用 up & down 组合键在菜单中上下移动
- 使用 Enter 键进入一个子菜单，Escape 键退出子菜单或退出整个菜单
- 输入 `?` 查看帮助信息，Enter 键退出帮助屏幕
- 使用空格键或 `Y` 和 `N` 键来使能 (Yes) 和禁止 (No) 带有复选框“`[*]`”的配置项
- 当光标在某个配置项上面高亮时，输入 `?` 可以直接查看该项的帮助信息
- 输入 `/` 搜索配置项

注意： 如果 ESP32-DevKitC 板载的是 ESP32-SOLO-1 模组，请务必在烧写示例程序之前在 menuconfig 中使能单核模式（*CONFIG_FREERTOS_UNICORE*）。

1.11 编译和烧写

现在可以编译和烧写应用程序了，执行指令：

```
make flash
```

这条命令会编译应用程序和所有的 ESP-IDF 组件，生成 bootloader、分区表和应用程序 bin 文件，并将这些 bin 文件烧写到 ESP32 板子上。

```
esptool.py v2.0-beta2
Flashing binaries to serial port /dev/ttyUSB0 (app at offset 0x10000)...
esptool.py v2.0-beta2
Connecting........___
Uploading stub...
Running stub...
Stub running...
Changing baud rate to 921600
Changed.
Attaching SPI flash...
Configuring flash size...
Auto-detected Flash size: 4MB
Flash params set to 0x0220
Compressed 11616 bytes to 6695...
Wrote 11616 bytes (6695 compressed) at 0x00001000 in 0.1 seconds (effective 920.5 kbit/
↪s)...
Hash of data verified.
Compressed 408096 bytes to 171625...
Wrote 408096 bytes (171625 compressed) at 0x00010000 in 3.9 seconds (effective 847.3␣
↪kbit/s)...
Hash of data verified.
Compressed 3072 bytes to 82...
Wrote 3072 bytes (82 compressed) at 0x00008000 in 0.0 seconds (effective 8297.4 kbit/s)..
↪.
Hash of data verified.

Leaving...
Hard resetting...
```

如果没有任何问题，在编译过程结束后将能看到类似上面的消息。最后，板子将会复位，应用程序“hello_world”开始启动。

如果你想使用 Eclipse IDE 而不是运行 `make`，请参考*Eclipse guide*。

1.12 监视器

如果要查看“hello_world”程序是否真的在运行，输入命令 `make monitor`。这个命令会启动 IDF Monitor 程序：

```
$ make monitor
MONITOR
--- idf_monitor on /dev/ttyUSB0 115200 ---
--- Quit: Ctrl+] | Menu: Ctrl+T | Help: Ctrl+T followed by Ctrl+H ---
ets Jun  8 2016 00:22:57

rst:0x1 (POWERON_RESET),boot:0x13 (SPI_FAST_FLASH_BOOT)
ets Jun  8 2016 00:22:57
...
```

在启动消息和诊断消息后，你就能看到“Hello world!”程序所打印的消息：

```
...
Hello world!
Restarting in 10 seconds...
I (211) cpu_start: Starting scheduler on APP CPU.
Restarting in 9 seconds...
Restarting in 8 seconds...
Restarting in 7 seconds...
```

要退出监视器，请使用快捷键 `Ctrl+]`。

注解： 如果串口打印的不是上面显示的消息而是类似下面的乱码：

```
e  )(Xn@ y.! ( PW+) Hn9a /9 ! t5  P ~ k  e ea 5 jA
~zY  Y(1 ,1   e  )(Xn@ y.!Dr zY( jpi | +z5Ymvp
```

或者监视器程序启动失败，那么可能你的开发板用的是 26 MHz 晶振，而 ESP-IDF 默认的是 40 MHz 晶振。请退出监视器，回到配置，将*CONFIG_ESP32_XTAL_FREQ_SEL* 改为 26 MHz，然后再次编译和烧写。请在 `make menuconfig` 的 Component config –> ESP32-specific –> Main XTAL frequency 中配置。

要一次性执行 `make flash` 和 `make monitor`，输入 `make flash monitor`。参考文档*IDF Monitor* 里的快捷键和更多内容。

你已完成 ESP32 的入门！

现在你可以尝试其他的示例工程 examples，或者直接开发自己的应用程序。

1.13 更新 ESP-IDF

使用 ESP-IDF 一段时间后，你可能想要进行升级来获得新的性能或者对 bug 进行修复。最简单的更新方式是删除已有的 `esp-idf` 文件夹然后再克隆一个，即重复获取 *ESP-IDF* 里的操作。

然后在用户配置文件中添加 *IDF_PATH*，这样工具链脚本就能够知道这一版本的 ESP-IDF 的具体位置。

另外一种方法是只更新有改动的部分。更新步骤取决于现在用的 *ESP-IDF* 版本。

1.14 相关文档

1.14.1 在用户配置文件中添加 IDF_PATH

[English]

为了在系统多次重新启动时保留 "IDF_PATH" 环境变量的设置，请按照以下说明将其添加到用户配置文件中。

Windows

用户配置文件脚本存放在 `C:/msys32/etc/profile.d/` 目录中。每次打开 MSYS2 窗口时，系统都执行这些脚本。

1. 在 `C:/msys32/etc/profile.d/` 目录下创建一个新的脚本文件。将其命名为 `export_idf_path.sh`。
2. 确定 ESP-IDF 目录的路径。路径与系统配置有关，例如 `C:\msys32\home\user-name\esp\esp-idf`。
3. 在脚本中加入 `export` 命令，e.g.:

   ```
   export IDF_PATH="C:/msys32/home/user-name/esp/esp-idf"
   ```

   请将原始 Windows 路径中将反斜杠替换为正斜杠。

1. 保存脚本。
2. 关闭 MSYS2 窗口并再次打开。输入以下命令检查是否设置了 `IDF_PATH`:

   ```
   printenv IDF_PATH
   ```

将此前在脚本文件中输入的路径打印出来。

如果您不想在用户配置文件中永久设置 `IDF_PATH`，则应在打开 MSYS2 窗口时手动输入:

```
export IDF_PATH="C:/msys32/home/user-name/esp/esp-idf"
```

如您在安装用于 ESP32 开发的软件时，从设置 *ESP-IDF* 路径 小节跳转到了这里，请返回到创建一个工程小节。

Linux and MacOS

在 `~/.profile` 文件中加入以下指令，创建 `IDF_PATH`:

export IDF_PATH=~/esp/esp-idf

注销并重新登录以使此更改生效。

注解: 如果将 `/bin/bash` 已设为登录 shell，并且 `.bash_profile` 和 `.profile` 同时存在，则更新 `.bash_profile`。

运行以下命令以确保 `IDF_PATH` 已经设置好:

```
printenv IDF_PATH
```

此前在 `~/.profile` 文件中输入（或者手动设置）的路径应该被打印出来。

如果不想永久设置 `IDF_PATH`，每次重启或者注销时在终端窗口中手动输入:

```
export IDF_PATH=~/esp/esp-idf
```

如果您从*设置 ESP-IDF 路径* 小节跳转到了这里，在安装用于 ESP32 开发的软件时，返回到*创建一个工程* 小节。

1.14.2 与 ESP32 创建串口连接

[English]

本章节介绍如何在 ESP32 和 PC 之间建立串口连接。

连接 ESP32 和 PC

用 USB 线将 ESP32 开发板连接到 PC。如果设备驱动程序没有自动安装，确认 ESP32 开发板上的 USB 转串口芯片（或外部串口适配器）型号，在网上搜索驱动程序并进行安装。

以下是乐鑫 ESP32 开发板驱动程序的链接：

- ESP32-PICO-KIT 和 ESP32-DevKitC - CP210x USB to UART Bridge VCP Drivers
- ESP32-WROVER-KIT 和 ESP32 Demo Board - FTDI Virtual COM Port Drivers

以上驱动仅用于参考。当您将上述 ESP32 开发板与 PC 连接时，对应驱动程序应该已经被打包在操作系统中并自动安装。

在 Windows 上查看端口

检查 Windows 设备管理器中的 COM 端口列表。断开 ESP32 与 PC 的连接，然后重新连接，查看哪个端口从列表中消失，然后再次显示。

以下为 ESP32 DevKitC 和 ESP32 WROVER KIT 串口：

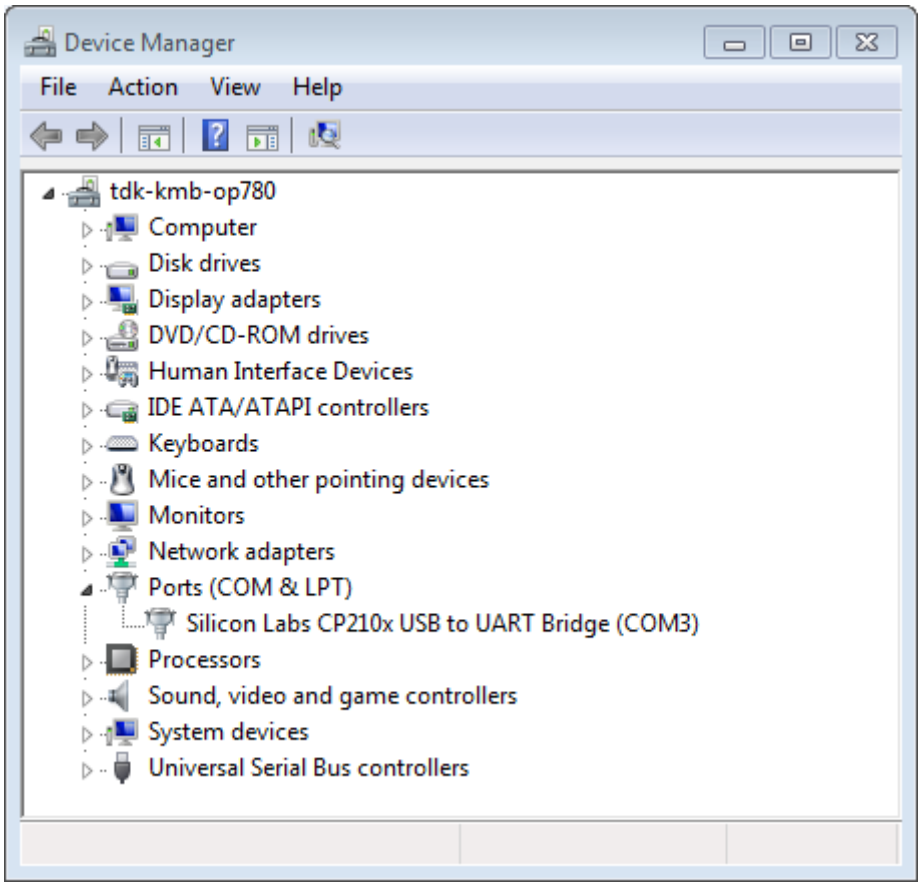

图 21: 设备管理器中 ESP32-DevKitC 的 USB 串口转换器

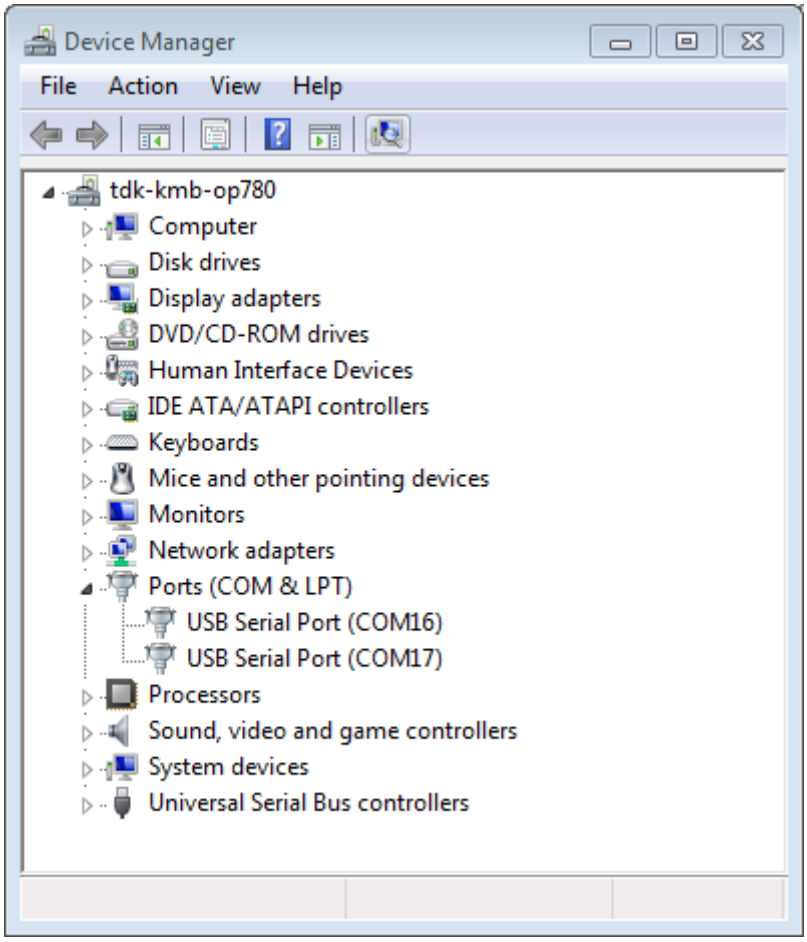

图 22: Windows 设备管理器中的两个 USB-WROVER-KIT 串行端口

在 Linux 和 MacOS 上检查串口

要查看 ESP32 开发板（或外部串口适配器）的串口设备名称，运行以下命令两次，第一次先拔下开发板或适配器，第二次插入开发板或适配器之后再运行命令，第二次运行指令后出现的端口即是 ESP32 对应的串口：

Linux

```
ls /dev/tty*
```

MacOS

```
ls /dev/cu.*
```

在 Linux 添加用户到 `dialout`

当前登录用户可以通过 USB 读写串口。在大多数 Linux 发行版中，这是通过以下命令将用户添加到 `dialout` 组来完成的:

```
sudo usermod -a -G dialout $USER
```

在 Arch Linux 中，需要通过以下命令将用户添加到 `uucp` 组中:

```
sudo usermod -a -G uucp $USER
```

重新登录以确保串行端口的读写权限被启用。

确认串口连接

现在验证串口连接是可用的。您可以使用串口终端程序来执行此操作。在这个例子中，我们将使用 PuTTY SSH Client ，它有 Windows 和 Linux 等平台的版本。您也可以使用其他串口程序并设置如下的通信参数。

运行终端，设置串口：波特率 = 115200，数据位 = 8，停止位 = 1，奇偶校验 = N。以下是设置串口和在 Windows 和 Linux 上传输参数（如 115200-8-1-N）的一些截屏示例。注意选择上述步骤中确认的串口进行设置。

在终端打开串口，检查是否有任何打印出来的日志。日志内容取决于加载到 ESP32 的应用程序。下图为 ESP32 的一个示例日志。

```
ets Jun  8 2016 00:22:57

rst:0x5 (DEEPSLEEP_RESET),boot:0x13 (SPI_FAST_FLASH_BOOT)
ets Jun  8 2016 00:22:57

rst:0x7 (TG0WDT_SYS_RESET),boot:0x13 (SPI_FAST_FLASH_BOOT)
```

(下页继续)

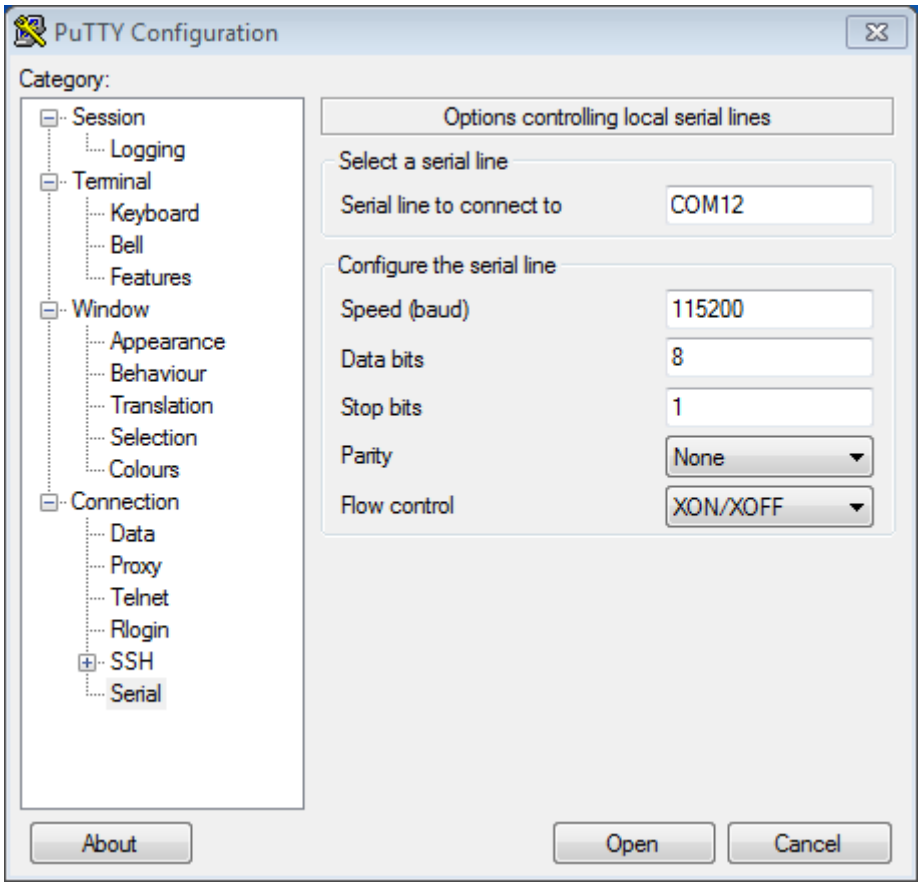

图 23: 在 Windows 上的 PuTTY 设置串口传输。

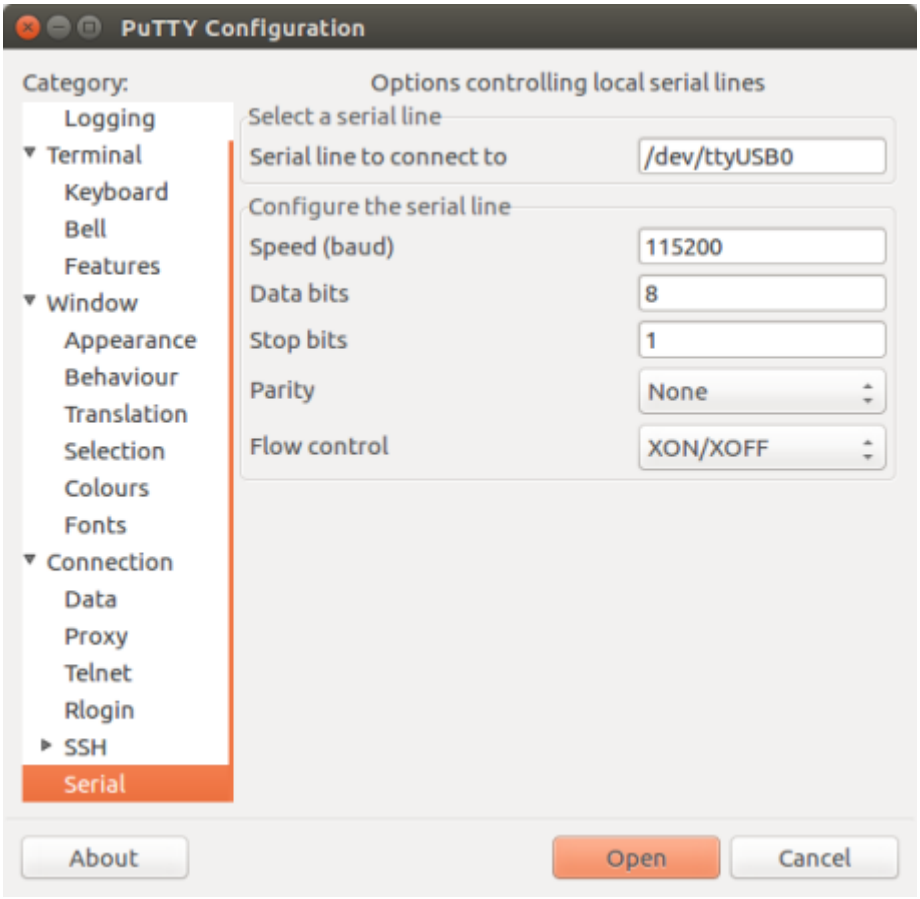

图 24: 在 Linux 上的 PuTTY 设置串口传输。

(续上页)

```
configsip: 0, SPIWP:0x00
clk_drv:0x00,q_drv:0x00,d_drv:0x00,cs0_drv:0x00,hd_drv:0x00,wp_drv:0x00
mode:DIO, clock div:2
load:0x3fff0008,len:8
load:0x3fff0010,len:3464
load:0x40078000,len:7828
load:0x40080000,len:252
entry 0x40080034
I (44) boot: ESP-IDF v2.0-rc1-401-gf9fba35 2nd stage bootloader
I (45) boot: compile time 18:48:10

...
```

如果您看到一些清晰的日志，则表示串行连接正常，您可以继续安装，最后将应用程序上载到 ESP32。

注解: 对于某些串口接线配置，在 ESP32 启动并产生串行输出之前，需要在终端程序中禁用串行 RTS & DTR 引脚。这取决于串口适配器硬件本身，大多数开发板（包括所有乐鑫开发板）没有这个问题。此问题仅存在于将 RTS & DTR 引脚直接连接到 EN & GPIO0 引脚上的情况。更多详细信息，参见 esptool documentation。

注解: 验证通讯正常后关闭串口终端。下一步，我们将使用另一个应用程序来上传 ESP32。此应用程序在终端打开时将无法访问串口。

如您在安装用于 ESP32 开发的软件时，从连接 小节跳转到了这里，请返回到配置 小节继续阅读。

1.14.3 通过 make 指令创建和烧录项目

[English]

寻找项目

和 esp-idf-template 项目一样，ESP-IDF 在 Github 上的 examples 目录下也有示例项目。

找到需要的项目后，切换到其目录，然后可以对其进行配置和构建。

配置项目

```
make menuconfig
```

编译项目

```
make all
```

…该命令将配置 app 和 bootloader 并根据配置生成分区表。

烧录项目

当 `make all` 结束后，系统将打印一命令行提示您如何使用 esptool.py 烧录芯片。用户也可以通过以下指令进行烧录:

```
make flash
```

这种方法将烧录整个项目（包括 app, bootloader 和分割表）到芯片中。通过命令 *make menuconfig* 可以配置串口。

运行 `make flash` 之前无需运行 `make all`。运行 `make flash` 将自动重建烧录所需的一切。

仅编译和烧录应用程序

在最初的烧录之后，用户可以仅创建烧录 app，不烧录 bootloader 和分区表:

- `make app` - 仅创建应用程序。
- `make app-flash` - 仅烧录应用程序。

需要时 `make app-flash` 指令将自动重建 app。

如果 bootloader 和分区表不变的话，对他们进行重新烧录并不会有负面影响。

分区表

编译完项目后，" build" 目录将包含一个名为 "my_app.bin" 的二进制文件。这是一个可由 bootloader 加载的 ESP32 映像二进制文件。

一个 ESP32 flash 可以包含多个应用程序，以及多种数据（校准数据，文件系统，参数存储等）。因此，分区表烧录在 flash 偏移地址 0x8000 的地方。

分区表中的每个条目都有一个名称（标签），类型（app，数据或其他），子类型和闪存中分区表被存放的偏移量。

使用分区表最简单的方法是 *make menuconfig* 并选择一个简单的预定义分区表:

- “Single factory app, no OTA”
- “Factory app, two OTA definitions”

在这两种情况下，出厂应用程序的烧录偏移为 0x10000。运行 *make partition_table*，可以打印分区表摘要。

更多关于分区表 的信息，以及如何创建自定义分区表，可以查看文档。

1.14.4 Eclipse IDE 的创建和烧录指南

[English]

安装 Eclipse IDE

Eclipse IDE 是一个可视化的集成开发环境，可用于编写、编译和调试 ESP-IDF 项目。

- 首先，请在您的平台上安装相应的 ESP-IDF，具体步骤请参考适用于 Windows、OS X 和 Linux 的相应安装步骤。
- 我们建议，您应首先使用命令行创建一个项目，大致熟悉项目的创建流程。此外，您还需要使用命令行 (`make menuconfig`) 对您的 ESP-IDF 项目进行配置。目前，Eclipse 尚不支持对 ESP-IDF 项目进行配置。
- 下载相应版本的 Eclipse Installer 至您的平台，点击 eclipse.org。
- 运行 Eclipse Installer，选择 “Eclipse for C/C++ Development”（有的版本也可能显示为 CDT）。

配置 Eclipse IDE

请打开安装好的 Eclipse IDE，并按照以下步骤进行操作：

导入新项目

- Eclipse IDE 需使用 ESP-IDF 的 Makefile 功能。因此，在使用 Eclipse 前，您需要先创建一个 ESP-IDF 项目。在创建 ESP-IDF 项目时，您可以使用 GitHub 中的 idf-template 项目模版，或从 esp-idf 子目录中选择一个 example。
- 运行 Eclipse，选择 “File” -> “Import…”。
- 在弹出的对话框中选择 “C/C++” -> “Existing Code as Makefile Project”，然后点击 “Next”。
- 在下个界面中 “Existing Code Location” 位置输入您的 IDF 项目的路径。注意，这里应输入 ESP-IDF 项目的路径，而非 ESP-IDF 本身的路径（这个稍后再填）。此外，您指定的目标路径中应包含名为 `Makefile` （项目 Makefile）的文件。
- 在本界面，找到 “Toolchain for Indexer Settings”，选择 “Cross GCC”，最后点击 “Finish”。

项目属性

- 新项目将出现在 “Project Explorer” 下。请右键选择该项目，并在菜单中选择 “Properties”。
- 点击 “C/C++ Build” 下的 “Environment” 属性页，选择 “Add…”，并在对应位置输入 `BATCH_BUILD` 和 `1`。
- 再次点击 “Add…”，并在 “IDF_PATH” 中输入 ESP-IDF 所在的完整安装路径。
- 选择 “PATH” 环境变量，不要改变默认值。如果 Xtensa 工具链的路径尚不在 “PATH” 列表中，则应将该路径 (`something/xtensa-esp32-elf/bin`) 增加至列表，工具链的典型路径类似于 `/home/user-name/esp/xtensa-esp32-elf/bin`。请注意您需要在附加路径前添加冒号 `:`。Windows 用户需要将 `C:\msys32\mingw32\bin;C:\msys32\opt\xtensa-esp32-elf\bin;C:\msys32\usr\bin` 添加到 `PATH` 环境变量的靠前位置（如果您将 msys32 安装到了其它目录，则需要更改对应的路径以匹配您的本地环境）。
- 在 macOS 平台上，增加一个 “PYTHONPATH” 环境变量，并将其设置为 `/Library/Frameworks/Python.framework/Versions/2.7/lib/python2.7/site-packages`，保证系统中预先安装的 Python（需安装 pyserial 模块）可以覆盖 Eclipse 内置的任何 Python。
- 前往 “C/C++ General” -> “Preprocessor Include Paths” 属性页面。
  - 点击 “Providers” 选项卡。
    * 从 “Providers” 列表中选择 “CDT Cross GCC Built-in Compiler Settings”, 将 “Command to get compiler specs” 修改为 `xtensa-esp32-elf-gcc ${FLAGS} -std=c++11 -E -P -v -dD "${INPUTS}"`
    * 从 “Providers” 列表中选择 “CDT GCC Build Output Parser”，将 “Compiler command pattern” 修改为 `xtensa-esp32-elf-(gcc|g\+\+|c\+\+|cc|cpp|clang)`
- 前往 “C/C++ General” -> “Indexer” 属性页面。
  - 去除 “Allow heuristic resolution of includes” 勾选。启用此选项时，Eclipse 有时无法找到正确的头文件目录。

点击 “C/C++ General” -> “Indexer” 属性页。

- 选择 “Enable project specific settings” 以启用本页上的其他设置。

注解: 取消选中 “Allow heuristic resolution of includes”。因为启用此选项时，有时会导致 Eclipse 无法找到正确的头文件目录。

点击 “C/C++ Build” -> “Behavior” 属性页。

- 选中 “Enable parallel build” 以启用多任务并行构建。

在 Eclipse IDE 中创建项目

在首次创建项目前，Eclipse IDE 可能会显示大量有关未定义值的错误和警告，主要原因在于项目编译过程中所需的一些源文件是在 ESP-IDF 项目创建过程中自动生成的。因此，这些错误和警告将在 ESP-IDF 项目生成完成后消失。

- 点击 “OK”，关闭 Eclipse IDE 中的 “Properties” 对话框。
- 在 Eclipse IDE 界面外，打开命令管理器。进入项目目录，并通过 `make menuconfig` 命令对您的 ESP-IDF 项目进行配置。现阶段，您还无法在 Eclipse 中完成本操作。

如果您未进行最开始的配置步骤，ESP-IDF 将提示在命令行中进行配置 - 但由于 Eclipse 暂时不支持相关功能，因此该项目将挂起或创建失败。

- 返回 Eclipse IDE 界面中，选择 “Project” -> “Build” 创建您的项目。

提示：如果您已经在 Eclipse IDE 环境外创建了项目，则可能需要选择 “Project” -> “Clean before choosing Project” -> “Build”，允许 Eclipse 查看所有源文件的编译器参数，并借此确定头文件包含路径。

在 Eclipse IDE 中烧录项目

您可以将 `make flash` 目标放在 Eclipse 项目中，通过 Eclipse UI 调用 `esptool.py` 进行烧录：

- 打开 “Project Explorer”，并右击您的项目（请注意右击项目本身，而非项目下的子文件，否则 Eclipse 可能会找到错误的 `Makefile`）。
- 从菜单中选择 “Build Targets” -> “Create”。
- 输入 “flash” 为目标名称，其他选项使用默认值。
- 选择 “Project” -> “Build Target” -> “Build (快捷键：Shift + F9)”，创建自定义烧录目标，用于编译、烧录项目。

注意，您将需要通过 `make menuconfig`，设置串行端口和其他烧录选项。`make menuconfig` 仍需通过命令行操作（请见平台的对应指南）。

如有需要，请按照相同步骤添加 `bootloader` 和 `partition_table`。

1.14.5 IDF Monitor

[English]

IDF Monitor 工具是在 IDF 中调用 “make monitor” 目标时运行的 Python 程序。

它主要是一个串行终端程序，用于收发该端口的串行数据，IDF Monitor 同时兼具 IDF 的其他特性。

IDF Monitor 操作快捷键

- `Ctrl-]` 退出 monitor；

- `Ctrl-T Ctrl-H` 展示帮助页面和其他快捷键；
- 除了 `Ctrl-]` 和 `Ctrl-T`，其他快捷键信号会通过串口发送到目标设备。

自动解码地址

当 esp-idf 以 "0x4 _____" 形式打印一个十六进制的代码地址时，IDF Monitor 将使用 addr2line 来查找源代码的位置和函数名称。

当某个 esp-idf 应用程序发生 crash 和 panic 事件之后，将产生如下的寄存器转储和回溯:

```
Guru Meditation Error of type StoreProhibited occurred on core  0. Exception was␣
↪unhandled.
Register dump:
PC      : 0x400f360d  PS      : 0x00060330  A0      : 0x800dbf56  A1      : 0x3ffb7e00
A2      : 0x3ffb136c  A3      : 0x00000005  A4      : 0x00000000  A5      : 0x00000000
A6      : 0x00000000  A7      : 0x00000080  A8      : 0x00000000  A9      : 0x3ffb7dd0
A10     : 0x00000003  A11     : 0x00060f23  A12     : 0x00060f20  A13     : 0x3ffba6d0
A14     : 0x00000047  A15     : 0x0000000f  SAR     : 0x00000019  EXCCAUSE: 0x0000001d
EXCVADDR: 0x00000000  LBEG    : 0x4000c46c  LEND    : 0x4000c477  LCOUNT  : 0x00000000

Backtrace: 0x400f360d:0x3ffb7e00 0x400dbf56:0x3ffb7e20 0x400dbf5e:0x3ffb7e40␣
↪0x400dbf82:0x3ffb7e60 0x400d071d:0x3ffb7e90
```

IDF Monitor 为转储补充如下信息:

```
Guru Meditation Error of type StoreProhibited occurred on core  0. Exception was␣
↪unhandled.
Register dump:
PC      : 0x400f360d  PS      : 0x00060330  A0      : 0x800dbf56  A1      : 0x3ffb7e00
0x400f360d: do_something_to_crash at /home/gus/esp/32/idf/examples/get-started/hello_
↪world/main/./hello_world_main.c:57
(inlined by) inner_dont_crash at /home/gus/esp/32/idf/examples/get-started/hello_world/
↪main/./hello_world_main.c:52
A2      : 0x3ffb136c  A3      : 0x00000005  A4      : 0x00000000  A5      : 0x00000000
A6      : 0x00000000  A7      : 0x00000080  A8      : 0x00000000  A9      : 0x3ffb7dd0
A10     : 0x00000003  A11     : 0x00060f23  A12     : 0x00060f20  A13     : 0x3ffba6d0
A14     : 0x00000047  A15     : 0x0000000f  SAR     : 0x00000019  EXCCAUSE: 0x0000001d
EXCVADDR: 0x00000000  LBEG    : 0x4000c46c  LEND    : 0x4000c477  LCOUNT  : 0x00000000

Backtrace: 0x400f360d:0x3ffb7e00 0x400dbf56:0x3ffb7e20 0x400dbf5e:0x3ffb7e40␣
↪0x400dbf82:0x3ffb7e60 0x400d071d:0x3ffb7e90
0x400f360d: do_something_to_crash at /home/gus/esp/32/idf/examples/get-started/hello_
↪world/main/./hello_world_main.c:57
```

(下页继续)

(续上页)

```
(inlined by) inner_dont_crash at /home/gus/esp/32/idf/examples/get-started/hello_world/
↪main/./hello_world_main.c:52
0x400dbf56: still_dont_crash at /home/gus/esp/32/idf/examples/get-started/hello_world/
↪main/./hello_world_main.c:47
0x400dbf5e: dont_crash at /home/gus/esp/32/idf/examples/get-started/hello_world/main/./
↪hello_world_main.c:42
0x400dbf82: app_main at /home/gus/esp/32/idf/examples/get-started/hello_world/main/./
↪hello_world_main.c:33
0x400d071d: main_task at /home/gus/esp/32/idf/components/esp32/./cpu_start.c:254
```

在后台，IDF Monitor 运行以下命令解码各个地址:

```
xtensa-esp32-elf-addr2line -pfiaC -e build/PROJECT.elf ADDRESS
```

配置 GDBStub 供 GDB 调试

默认情况下，如果 esp-idf 应用程序 crash, panic 处理函数打印上述的寄存器和堆栈转储，然后重启。

您可以选择配置 panic 处理函数，使其运行串行的 “gdb stub”。该程序可以与 gdb 调试器通信，提供内存，变量，栈帧读取的功能。虽然这不像 JTAG 调试那样通用，但您不需要使用特殊硬件。

要启用 gdbstub，运行 `make menuconfig` 并将*CONFIG_ESP32_PANIC* 选项设置为 `Invoke GDBStub`。

如果启用此选项并且 IDF Monitor 发现 gdbstub 已加载，它将自动暂停串口监控并使用正确的参数运行 GDB。GDB 退出后，电路板将通过 RTS 串行线路复位（如果已连接）。

IDF Monitor 在后台运行的命令是:

```
xtensa-esp32-elf-gdb -ex "set serial baud BAUD" -ex "target remote PORT" -ex interrupt␣
↪build/PROJECT.elf
```

快速编译与烧录

使用快捷键 `Ctrl-T Ctrl-A` 暂停 IDF Monitor，并运行 `make flash` 目标，然后 IDF Monitor 就会恢复正常。任何更改的源文件将在烧录之前重新编译。

使用快捷键 `Ctrl-T Ctrl-A` 暂停 IDF Monitor，并运行 `make app-flash` 目标，然后 IDF Monitor 就会恢复正常。这与 `make flash` 类似，但只有主应用程序被编译和重新烧录。

快速重置

键盘快捷键 `Ctrl-T Ctrl-R` 将通过 RTS 线（如果已连接）重置开发板。

暂停应用程序

通过快捷键 `Ctrl-T Ctrl-P` 重启进入 bootloader，开发板将不运行任何程序。等待其他设备启动时可以使用此操作。使用快捷键 `Ctrl-T Ctrl-R` 重新启动应用程序。

输出显示开关

暂停屏幕上的输出，以查看之前日志，可以使用快捷键 `Ctrl-T Ctrl-Y` 切换显示（当显示关闭时丢弃所有的串行数据）。这样您可以停下来查看日志，不必关闭显示器就可以快速恢复打印。

Simple Monitor

较早版本的 ESP-IDF 使用 pySerial 命令行程序 miniterm 作为串行控制台程序。

这个程序仍然可以通过 `make simple_monitor` 运行。

IDF Monitor 基于 miniterm 并使用相同的快捷键。

IDF Monitor 已知问题

Windows 环境下已知问题

- 如果您使用支持 idf_monitor 的 Windows 环境，却收到错误 “winpty: command not found”，请运行 `pacman -S winpty` 进行修复。
- 由于 Windows 控制台的限制，gdb 中的箭头键和其他一些特殊键不起作用。
- 偶尔当 “make” 退出时，可能会在 idf_monitor 恢复之前暂停 30 秒。
- 偶尔当 “gdb” 运行时，它可能会暂停一段时间，然后才开始与 gdbstub 进行通信。

1.14.6 Customized Setup of Toolchain

Instead of downloading binary toolchain from Espressif website (see 设置工具链) you may build the toolchain yourself.

If you can’t think of a reason why you need to build it yourself, then probably it’s better to stick with the binary version. However, here are some of the reasons why you might want to compile it from source:

- if you want to customize toolchain build configuration
- if you want to use a different GCC version (such as 4.8.5)
- if you want to hack gcc or newlib or libstdc++
- if you are curious and/or have time to spare
- if you don’t trust binaries downloaded from the Internet

In any case, here are the instructions to compile the toolchain yourself.

从零开始设置 Linux 环境下的工具链

[English]

注解： 安装工具链的标准流程可以通过阅读文档*Linux 平台工具链的标准设置* 来获得，*工具链的自定义设置* 章节会介绍哪些情况下我们必须要重新定义工具链。

安装必要的工具

要想使用 ESP-IDF 进行编译，您需要获取以下软件包：

- Ubuntu 和 Debian:

```
sudo apt-get install git wget libncurses-dev flex bison gperf python3 python3-pip␣
↪python3-setuptools python3-serial python3-cryptography python3-future python3-
↪pyparsing python3-pyelftools cmake ninja-build ccache libffi-dev libssl-dev
```

- Arch:

```
sudo pacman -Sy --needed gcc git make ncurses flex bison gperf python-pyserial␣
↪python-cryptography python-future python-pyparsing python-pyelftools cmake ninja␣
↪ccache
```

注解： 一些旧的（2014 年之前）Linux 发行版中使用的 `pyserial` 版本可能是 2.x，ESP-IDF 并不支持。在这种情况下，请参考*安装依赖的 Python 软件包* 章节，通过 `pip` 工具来安装支持的版本。

从源代码编译工具链

- 安装依赖:
  - CentOS 7:

```
sudo yum install gawk gperf grep gettext ncurses-devel python3 python3-devel␣
↪automake bison flex texinfo help2man libtool
```

  - Ubuntu pre-16.04:

```
sudo apt-get install gawk gperf grep gettext libncurses-dev python python-dev␣
↪automake bison flex texinfo help2man libtool
```

- Ubuntu 16.04:

```
sudo apt-get install gawk gperf grep gettext python python-dev automake bison␣
↪flex texinfo help2man libtool libtool-bin
```

- Debian 9:

```
sudo apt-get install gawk gperf grep gettext libncurses-dev python python-dev␣
↪automake bison flex texinfo help2man libtool libtool-bin
```

- Arch:

```
sudo pacman -Sy --needed python-pip
```

新建工作目录，然后进入:

```
mkdir -p ~/esp
cd ~/esp
```

下载 crosstool-NG 然后编译:

```
git clone -b xtensa-1.22.x https://github.com/espressif/crosstool-NG.git
cd crosstool-NG
./bootstrap && ./configure --enable-local && make install
```

编译工具链:

```
./ct-ng xtensa-esp32-elf
./ct-ng build
chmod -R u+w builds/xtensa-esp32-elf
```

编译得到的工具链会被保存到 ~/esp/crosstool-NG/builds/xtensa-esp32-elf。根据*Linux 下设置环境变量的标准方法* 中的介绍，将工具链添加到 PATH 中。

停用 Python 2

Python 2 已经 结束生命周期，ESP-IDF 很快将不再支持 Python 2。请安装 Python 3.6 或以上版本。可参考上面列出的目前主流 Linux 发行版的安装说明。

下一步

继续设置开发环境，请前往获取 *ESP-IDF* 章节。

CHAPTER 2

快速入门 (CMake)

[英文]

注解： 本文档将介绍如何使用 CMake 编译系统。目前，CMake 编译系统仍处于预览发布阶段，如您在使用中遇到任何问题，请前往 ESP-IDF 提交 Issues。

未来，CMake 编译系统将在 ESP-IDF v4.0 发布后过渡为默认编译系统，现行基于 GNU Make 的编译系统将在 ESP-IDF v5.0 后弃用。

重要： 目前，CMake 编译系统尚不支持以下功能：

- Eclipse IDE 文档
- 安全启动
- Flash 加密

未来，CMake 编译系统将在 ESP-IDF v4.0 发布后取代现有基于 GNU Make 的编译系统，成为默认编译系统。我们会在 ESP-IDF v4.0 发布前逐步完善上述功能。

本文档旨在指导用户创建 ESP32 的软件环境。本文将通过一个简单的例子，说明 ESP-IDF (Espressif IoT Development Framework) 的使用方法，包括配置、编译、下载固件到开发板等步骤。

注解： 这是 ESP-IDF branch `release/v3.3` 版本的文档，还有其他版本的文档*ESP-IDF Versions* 供参考。

2.1 概述

ESP32 是一套 Wi-Fi (2.4 GHz) 和蓝牙 (4.2) 双模解决方案，集成了高性能的 CPU 内核、超低功耗协处理器和丰富的外设。ESP32 采用 40 nm 工艺制成，具有最佳的功耗性能、射频性能、稳定性、通用性和可靠性，适用于各种应用和不同功耗需求。

乐鑫为用户提供完整的软、硬件资源，支持 ESP32 设备的开发。我们的软件开发环境 ESP-IDF 能够帮助用户快速开发物联网 (IoT) 应用，满足用户对于 Wi-Fi、蓝牙、低功耗等性能的需求。

2.2 准备工作

开发 ESP32 应用程序需要准备：

- **电脑**：安装 Windows、Linux 或者 Mac 操作系统
- **工具链**：用于编译 ESP32 代码
- **编译工具**：用于编译 ESP32 完整 ** 应用程序 ** 的 CMake 和 Ninja
- **ESP-IDF**：包含 ESP32 API 和用于操作 **工具链**的脚本
- **文本编辑器**：编写 C 语言程序，例如 Eclipse
- **ESP32 开发板**和将其连接到 **电脑**的 **USB 线**

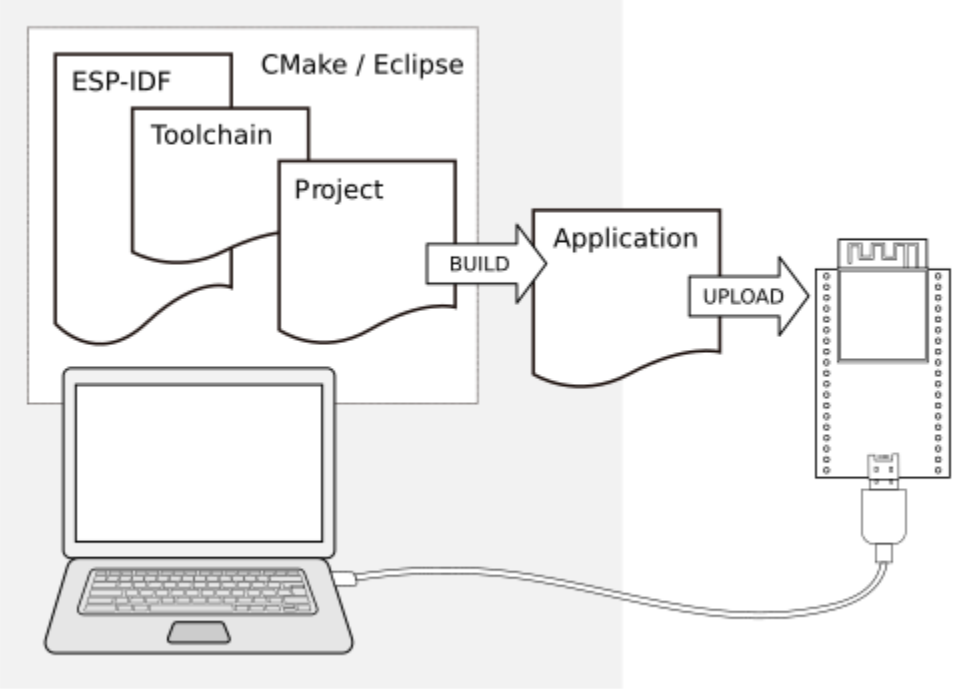

图 1: 开发应用程序

开发环境的准备工作包括以下两部分：

1. 设置 **工具链**
2. 从 GitHub 上获取 **ESP-IDF**

开发环境设置完成后，遵循以下步骤创建 ESP-IDF 应用程序：

1. 配置 ** 工程 ** 并编写代码
2. 编译 ** 工程 ** 并链接成一个 ** 应用程序 **
3. 通过 USB/串口连接，烧录（上传）预编译的 ** 应用程序 ** 到 **ESP32**
4. 通过 USB/串口，监视/调试 ** 应用程序 ** 输出

2.3 开发板指南

如果你有下列任一 ESP32 开发板，请点击对应的链接进行硬件设置：

2.3.1 ESP32-DevKitC V4 Getting Started Guide (CMake)

This user guide shows how to get started with ESP32-DevKitC V4 development board. For description of other versions of the ESP32-DevKitC check *ESP32 H/W 硬件参考*.

What You Need

- 1 × *ESP32-DevKitC V4 board*
- 1 × USB A / micro USB B cable
- 1 × PC loaded with Windows, Linux or Mac OS

If you want to start using this board right now, go directly to Section *Start Application Development*.

Overview

ESP32-DevKitC V4 is a small-sized ESP32-based development board produced by Espressif. Most of the I/O pins are broken out to the pin headers on both sides for easy interfacing. Developers can connect these pins to peripherals as needed. Standard headers also make development easy and convenient when using a breadboard.

The board supports various ESP32 modules, including *ESP32-WROOM-32*, *ESP32-WROOM-32U*, *ESP32-WROOM-32D* and *ESP32-SOLO-1*.

Functional Description

The following list and figure below describe key components, interfaces and controls of ESP32-DevKitC V4 board.

ESP-WROOM-32 *ESP32-WROOM-32* module soldered to the ESP32-DevKitC V4 board. Optionally ESP32-WROOM-32D, ESP32-WROOM-32U or ESP32-SOLO-1 module may be soldered instead of the ESP32-WROOM-32.

USB-UART Bridge A single chip USB-UART bridge provides up to 3 Mbps transfers rates.

Boot Download button: holding down the **Boot** button and pressing the **EN** button initiates the firmware download mode. Then user can download firmware through the serial port.

Micro USB Port USB interface. It functions as the power supply for the board and the communication interface between PC and the ESP module.

5V Power On LED This LED lights when the USB or an external 5V power supply is applied to the board. For details see schematic in *Related Documents*.

EN Reset button: pressing this button resets the system.

I/O Most of the pins on the ESP module are broken out to the pin headers on the board. Users can program ESP32 to enable multiple functions such as PWM, ADC, DAC, I2C, I2S, SPI, etc.

注解: Some of broken out pins are used internally be the ESP32 module to communicate with SPI memory. They are grouped on one side of the board besides the USB connector and labeled D0, D1, D2, D3, CMD and CLK. In general these pins should be left unconnected or access to the SPI flash memory / SPI RAM may be disturbed.

注解: GPIO16 and 17 are used internally by the ESP32-WROVER module. They are broken out and avialable for use only for boards that have the ESP-WROOM-32 module installed.

Power Supply Options

There following options are available to provide power supply to this board:

1. Micro USB port, this is default power supply connection
2. 5V / GND header pins
3. 3V3 / GND header pins

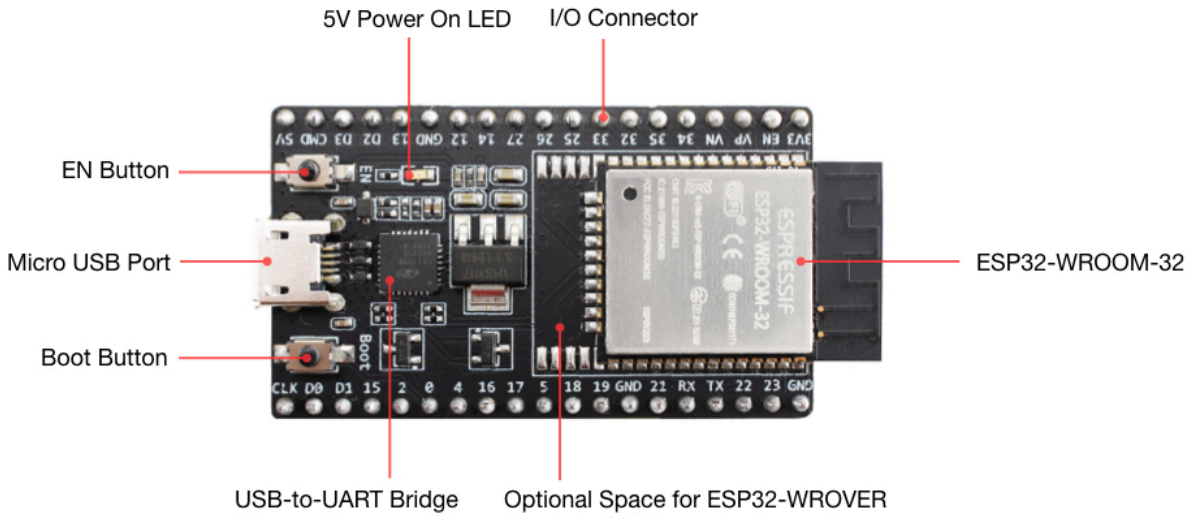

图 2: ESP32-DevKitC V4 with ESP-WROOM-32 module soldered

警告: Above options are mutually exclusive, i.e. the power supply may be provided using only one of the above options. Attempt to power the board using more than one connection at a time may damage the board and/or the power supply source.

Start Application Development

Before powering up the ESP32-DevKitC, please make sure that the board has been received in good condition with no obvious signs of damage.

To start development of applications, proceed to Section 快速入门 *(CMake)*, that will walk you through the 开发板指南.

Board Dimensions

Related Documents

- ESP32-DevKitC V4 schematic (PDF)
- ESP32 Datasheet (PDF)
- ESP-WROOM-32 Datasheet (PDF)
- ESP32-WROVER Datasheet (PDF)

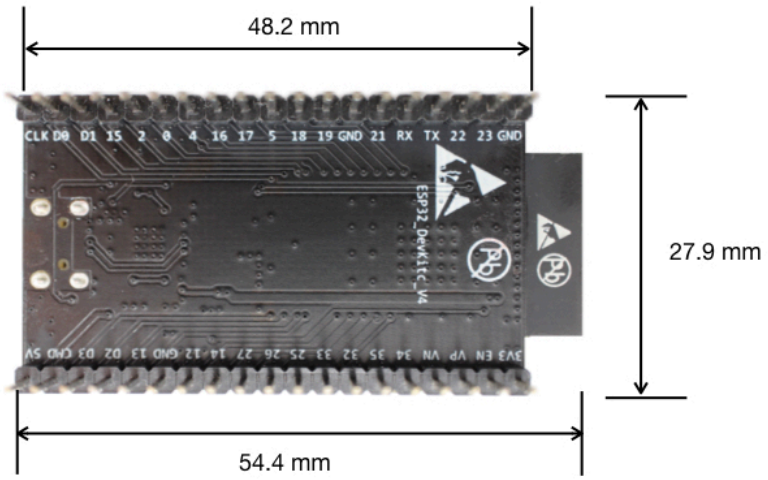

图 3: ESP32 DevKitC board dimensions - back

ESP32-DevKitC V2 Getting Started Guide (CMake)

This user guide shows how to get started with ESP32-DevKitC development board.

What You Need

- 1 × *ESP32-DevKitC V2 board*
- 1 × USB A / micro USB B cable
- 1 × PC loaded with Windows, Linux or Mac OS

If you want to start using this board right now, go directly to Section *Start Application Development*.

Overview

ESP32-DevKitC is a small-sized ESP32-based development board produced by Espressif. Most of the I/O pins are broken out to the pin headers on both sides for easy interfacing. Developers can connect these pins to peripherals as needed. Standard headers also make development easy and convenient when using a breadboard.

Functional Description

The following list and figure below describe key components, interfaces and controls of ESP32-DevKitC board.

ESP-WROOM-32 Standard ESP-WROOM-32 module soldered to the ESP32-DevKitC board.

EN Reset button: pressing this button resets the system.

Boot Download button: holding down the **Boot** button and pressing the **EN** button initiates the firmware download mode. Then user can download firmware through the serial port.

USB USB interface. It functions as the power supply for the board and the communication interface between PC and ESP-WROOM-32.

I/O Most of the pins on the ESP-WROOM-32 are broken out to the pin headers on the board. Users can program ESP32 to enable multiple functions such as PWM, ADC, DAC, I2C, I2S, SPI, etc.

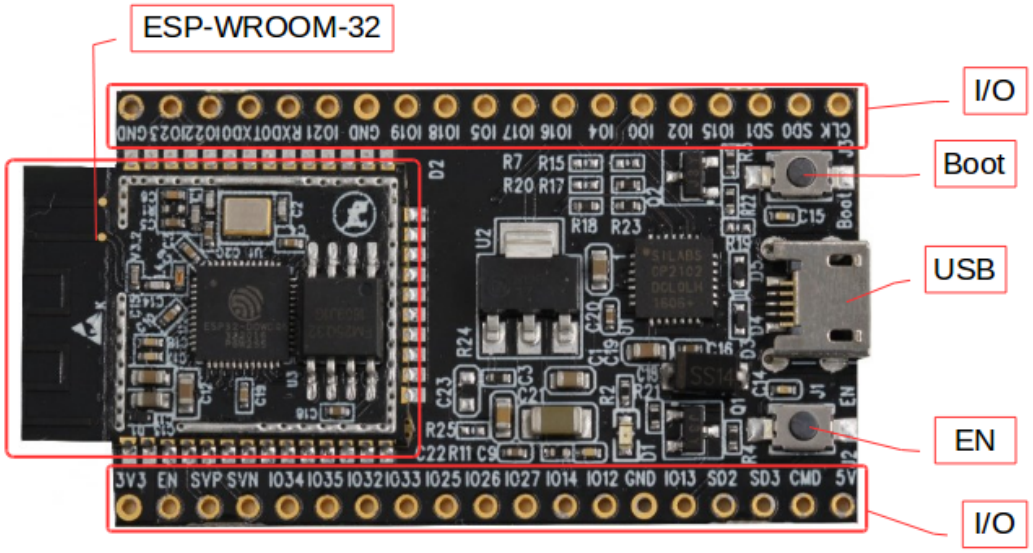

图 4: ESP32-DevKitC V2 board layout

Power Supply Options

There following options are available to provide power supply to this board:

1. Micro USB port, this is default power supply connection
2. 5V / GND header pins

3. 3V3 / GND header pins

警告: Above options are mutually exclusive, i.e. the power supply may be provided using only one of the above options. Attempt to power the board using more than one connection at a time may damage the board and/or the power supply source.

Start Application Development

Before powering up the ESP32-DevKitC, please make sure that the board has been received in good condition with no obvious signs of damage.

To start development of applications, proceed to Section *快速入门 (CMake)*, that will walk you through the *开发板指南*.

Related Documents

- ESP32-DevKitC schematic (PDF)
- ESP32 Datasheet (PDF)
- ESP-WROOM-32 Datasheet (PDF)

2.3.2 ESP-WROVER-KIT V3 Getting Started Guide (CMake)

This user guide shows how to get started with ESP-WROVER-KIT V3 development board including description of its functionality and configuration options. For description of other versions of the ESP-WROVER-KIT check *ESP32 H/W 硬件参考*.

What You Need

- 1 × *ESP-WROVER-KIT V3 board*
- 1 x Micro USB 2.0 Cable, Type A to Micro B
- 1 × PC loaded with Windows, Linux or Mac OS

If you want to start using this board right now, go directly to Section *Start Application Development*.

Overview

The ESP-WROVER-KIT is a development board produced by Espressif built around ESP32. This board is compatible with ESP32 modules, including the ESP-WROOM-32 and ESP32-WROVER. The ESP-WROVER-KIT features support for an LCD and MicroSD card. The I/O pins have been broken out from

the ESP32 module for easy extension. The board carries an advanced multi-protocol USB bridge (the FTDI FT2232HL), enabling developers to use JTAG directly to debug the ESP32 through the USB interface. The development board makes secondary development easy and cost-effective.

注解: ESP-WROVER-KIT V3 integrates the ESP32-WROVER module by default.

Functionality Overview

Block diagram below presents main components of ESP-WROVER-KIT and interconnections between components.

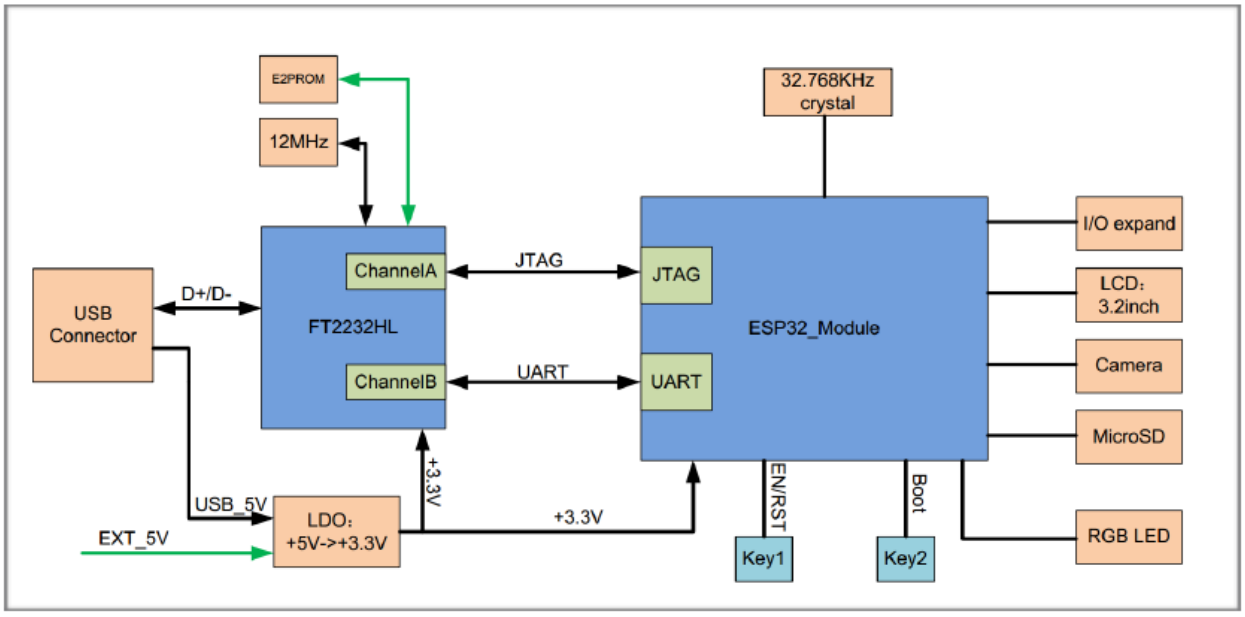

图 5: ESP-WROVER-KIT block diagram

Functional Description

The following list and figures below describe key components, interfaces and controls of ESP-WROVER-KIT board.

32.768 kHz An external precision 32.768 kHz crystal oscillator provides the chip with a clock of low-power consumption during the Deep-sleep mode.

0R A zero Ohm resistor intended as a placeholder for a current shunt. May be desoldered or replaced with a current shunt to facilitate measurement of current required by ESP32 module depending on power mode.

ESP32 Module ESP-WROVER-KIT is compatible with both ESP-WROOM-32 and ESP32-WROVER. The ESP32-WROVER module features all the functions of ESP-WROOM-32 and integrates an external 32-MBit PSRAM for flexible extended storage and data processing capabilities.

注解: GPIO16 and GPIO17 are used as the CS and clock signal for PSRAM. To ensure reliable performance, the two GPIOs are not broken out.

FT2232 The FT2232 chip is a multi-protocol USB-to-serial bridge. Users can control and program the FT2232 chip through the USB interface to establish communication with ESP32. The FT2232 chip also features USB-to-JTAG interface. USB-to-JTAG is available on channel A of FT2232, USB-to-serial on channel B. The embedded FT2232 chip is one of the distinguishing features of the ESPWROVER-KIT. It enhances users' convenience in terms of application development and debugging. In addition, users do not need to buy a JTAG debugger separately, which reduces the development cost, see ESP-WROVER-KIT V3 schematic.

UART Serial port: the serial TX/RX signals on FT2232HL and ESP32 are broken out to the two sides of JP11. By default, the two signals are connected with jumpers. To use the ESP32 module serial interface only, the jumpers may be removed and the module can be connected to another external serial device.

SPI SPI interface: the SPI interface connects to an external flash (PSRAM). To interface another SPI device, an extra CS signal is needed. The electrical level on the flash of this module is 1.8V. If an ESP-WROOM-32 is being used, please note that the electrical level on the flash of this module is 3.3V.

CTS/RTS Serial port flow control signals: the pins are not connected to the circuitry by default. To enable them, respective pins of JP14 must be shorted with jumpers.

JTAG JTAG interface: the JTAG signals on FT2232HL and ESP32 are broken out to the two sides of JP8. By default, the two signals are disconnected. To enable JTAG, shorting jumpers are required on the signals.

EN Reset button: pressing this button resets the system.

Boot Download button: holding down the **Boot** button and pressing the **EN** button initiates the firmware download mode. Then user can download firmware through the serial port.

USB USB interface. It functions as the power supply for the board and the communication interface between PC and ESP32 module.

Power Select Power supply selection interface: the ESP-WROVER-KIT can be powered through the USB interface or the 5V Input interface. The user can select the power supply with a jumper. More details can be found in Section *Setup Options*, jumper header JP7.

Power Key Power on/off button: toggling to the right powers the board on; toggling to the left powers the board off.

5V Input The 5V power supply interface is used as a backup power supply in case of full-load operation.

LDO NCP1117(1A). 5V-to-3.3V LDO. (There is an alternative pin-compatible LDO —LM317DCY, with an output current of up to 1.5A). NCP1117 can provide a maximum current of 1A. The LDO solutions are available with both fixed output voltage and variable output voltage. For details please refer to ESP-WROVER-KIT V3 schematic.

Camera Camera interface: a standard OV7670 camera module is supported.

RGB Red, green and blue (RGB) light emitting diodes (LEDs), which may be controlled by pulse width modulation (PWM).

I/O All the pins on the ESP32 module are led out to the pin headers on the ESP-WROVER-KIT. Users can program ESP32 to enable multiple functions such as PWM, ADC, DAC, I2C, I2S, SPI, etc.

Micro SD Card Micro SD card slot for data storage.

LCD ESP-WROVER-KIT supports mounting and interfacing a 3.2" SPI (standard 4-wire Serial Peripheral Interface) LCD, as shown on figure *ESP-WROVER-KIT board layout - back*.

Setup Options

There are five jumper headers available to set up the board functionality. Typical options to select from are listed in table below.

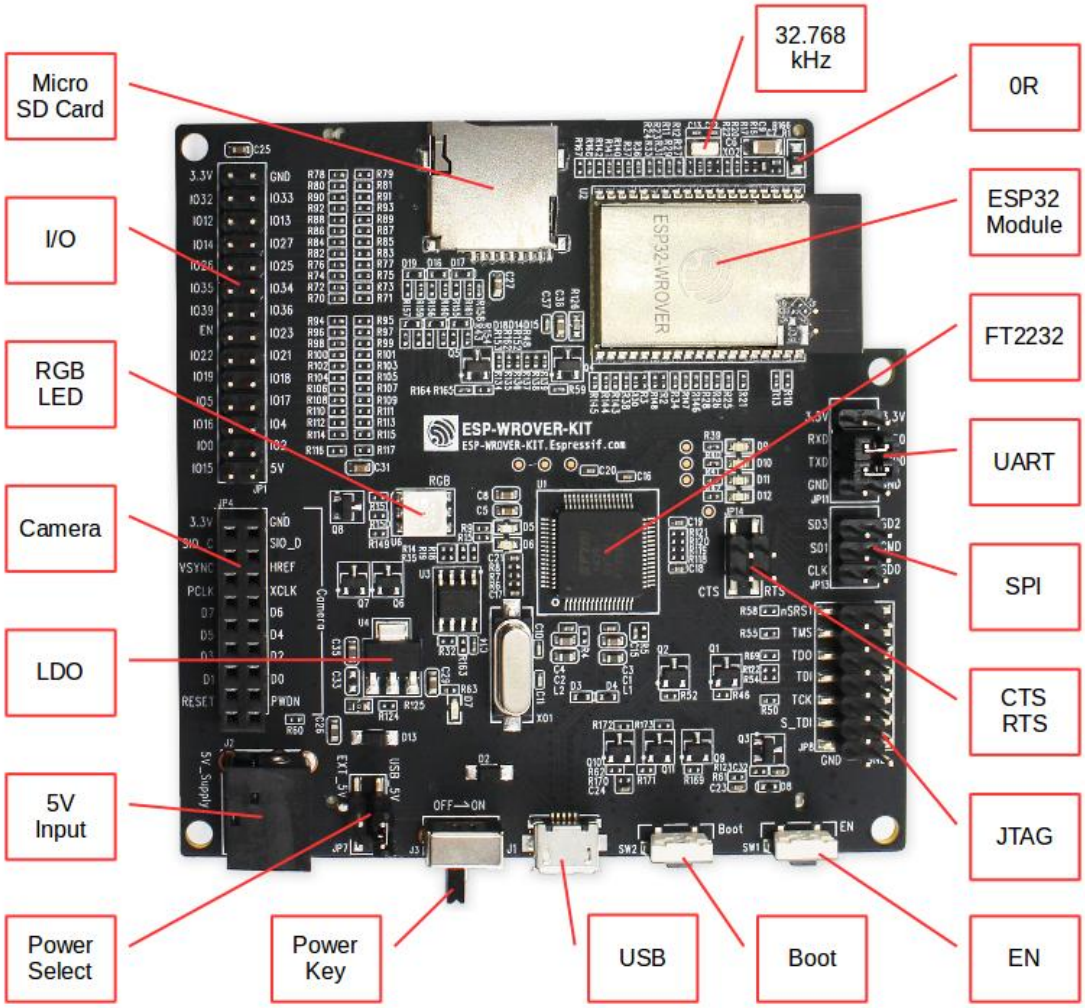

图 6: ESP-WROVER-KIT board layout - front

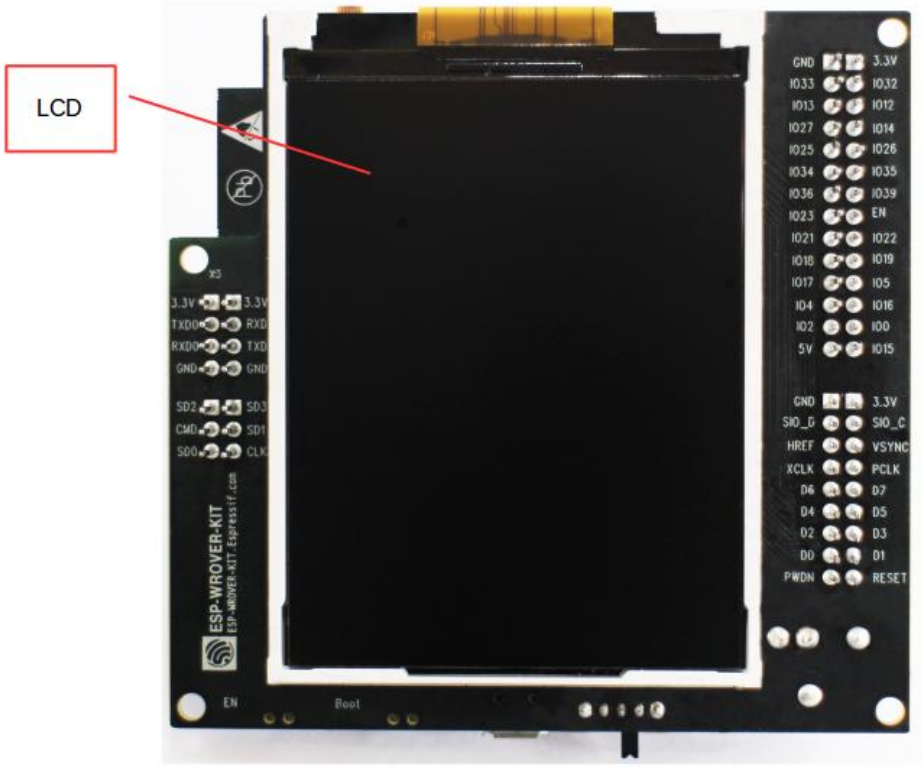

图 7: ESP-WROVER-KIT board layout - back

Header	Jumper Setting	Description of Functionality
JP7	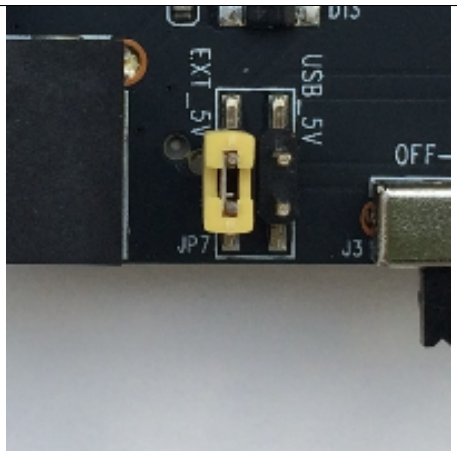	Power ESP-WROVER-KIT board from an external power supply
JP7	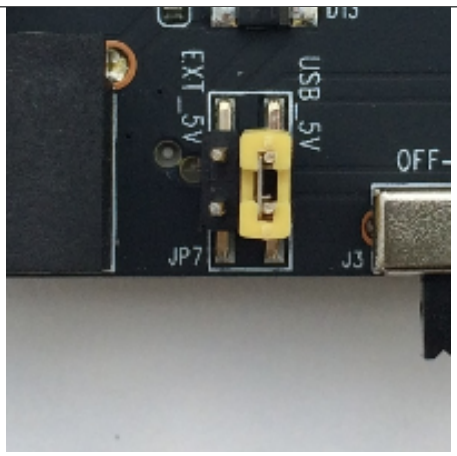	Power ESP-WROVER-KIT board from an USB port
JP8	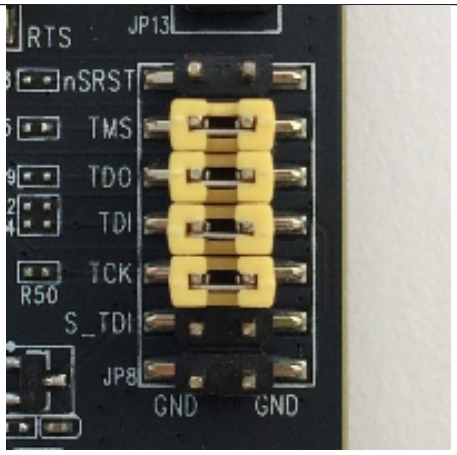	Enable JTAG functionality
	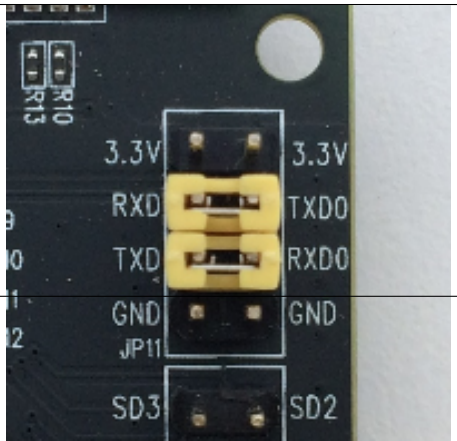	

JP11 Enable UART communication

Allocation of ESP32 Pins

Several pins / terminals of ESP32 module are allocated to the on board hardware. Some of them, like GPIO0 or GPIO2, have multiple functions. If certain hardware is not installed, e.g. nothing is plugged in to the Camera / JP4 header, then selected GPIOs may be used for other purposes.

Main I/O Connector / JP1

The JP1 connector is shown in two columns in the middle under "I/O" headers. The two columns "Shared With" outside, describe where else on the board certain GPIO is used.

Shared With	I/O	I/O	Shared With
	3.3V	GND	
NC/XTAL	IO32	IO33	NC/XTAL
JTAG, MicroSD	IO12	IO13	JTAG, MicroSD
JTAG, MicroSD	IO14	IO27	Camera
Camera	IO26	IO25	Camera, LCD
Camera	IO35	IO34	Camera
Camera	IO39	IO36	Camera
JTAG	EN	IO23	Camera, LCD
Camera, LCD	IO22	IO21	Camera, LCD, MicroSD
Camera, LCD	IO19	IO18	Camera, LCD
Camera, LCD	IO5	IO17	PSRAM
PSRAM	IO16	IO4	LED, Camera, MicroSD
LED, Boot	IO0	IO2	LED, Camera, MicroSD
JTAG, MicroSD	IO15	5V	

Legend:

- NC/XTAL - *32.768 kHz Oscillator*
- JTAG - *JTAG / JP8*
- Boot - Boot button / SW2
- Camera - *Camera / JP4*
- LED - *RGB LED*
- MicroSD - *MicroSD Card / J4*
- LCD - *LCD / U5*
- PSRAM - ESP32-WROVER' s PSRAM, if ESP32-WROVER is installed

32.768 kHz Oscillator

	ESP32 Pin
1	GPIO32
2	GPIO33

注解: As GPIO32 and GPIO33 are connected to the oscillator, to maintain signal integrity, they are not connected to JP1 I/O expansion connector. This allocation may be changed from oscillator to JP1 by desoldering 0R resistors from positions R11 / R23 and installing them in positions R12 / R24.

SPI Flash / JP13

	ESP32 Pin
1	CLK / GPIO6
2	SD0 / GPIO7
3	SD1 / GPIO8
4	SD2 / GPIO9
5	SD3 / GPIO10
6	CMD / GPIO11

重要: The module' s flash bus is connected to the pin header JP13 through 0-Ohm resistors R140 ~ R145. If the flash frequency needs to operate at 80 MHz, to improve integrity of the bus signals, it is recommended to desolder resistors R140 ~ R145. At this point, the module' s flash bus is disconnected with the pin header JP13.

JTAG / JP8

	ESP32 Pin	JTAG Signal
1	EN	TRST_N
2	MTDO / GPIO15	TDO
3	MTDI / GPIO12	TDI
4	MTCK / GPIO13	TCK
5	MTMS / GPIO14	TMS

Camera / JP4

	ESP32 Pin	Camera Signal
1	GPIO27	SCCB Clock
2	GPIO26	SCCB Data
3	GPIO21	System Clock
4	GPIO25	Vertical Sync
5	GPIO23	Horizontal Reference
6	GPIO22	Pixel Clock
7	GPIO4	Pixel Data Bit 0
8	GPIO5	Pixel Data Bit 1
9	GPIO18	Pixel Data Bit 2
10	GPIO19	Pixel Data Bit 3
11	GPIO36	Pixel Data Bit 4
11	GPIO39	Pixel Data Bit 5
11	GPIO34	Pixel Data Bit 6
11	GPIO35	Pixel Data Bit 7
11	GPIO2	Camera Reset

RGB LED

	ESP32 Pin	RGB LED
1	GPIO0	Red
2	GPIO2	Blue
3	GPIO4	Green

MicroSD Card / J4

	ESP32 Pin	MicroSD Signal
1	MTDI / GPIO12	DATA2
2	MTCK / GPIO13	CD / DATA3
3	MTDO / GPIO15	CMD
4	MTMS / GPIO14	CLK
5	GPIO2	DATA0
6	GPIO4	DATA1
7	GPIO21	CD

LCD / U5

	ESP32 Pin	LCD Signal
1	GPIO18	RESET
2	GPIO19	SCL
3	GPIO21	D/C
4	GPIO22	CS
5	GPIO23	SDA
6	GPIO25	SDO
7	GPIO5	Backlight

Start Application Development

Before powering up the ESP-WROVER-KIT, please make sure that the board has been received in good condition with no obvious signs of damage.

Initial Setup

Select the source of power supply for the board by setting jumper JP7. The options are either USB port or an external power supply. For this application selection of USB port is sufficient. Enable UART communication by installing jumpers on JP11. Both selections are shown in table below.

Power up from USB port	Enable UART communication
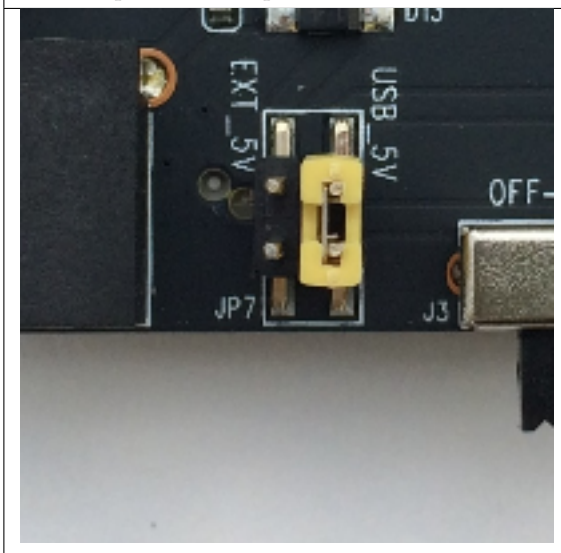	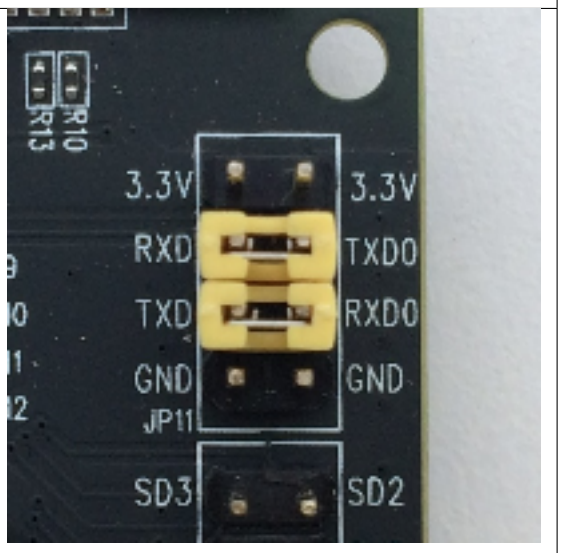

Do not install any other jumpers.

Now to Development

To start development of applications, proceed to Section *快速入门 (CMake)*, that will walk you through the *开发板指南*.

Related Documents

- ESP-WROVER-KIT V3 schematic (PDF)
- ESP32 Datasheet (PDF)
- ESP32-WROVER Datasheet (PDF)
- ESP-WROOM-32 Datasheet (PDF)
- *JTAG 调试*
- *ESP32 H/W 硬件参考*

ESP-WROVER-KIT V2 Getting Started Guide (CMake)

This user guide shows how to get started with ESP-WROVER-KIT V2 development board including description of its functionality and configuration options. For description of other versions of the ESP-WROVER-KIT check *ESP32 H/W 硬件参考*.

If you want to start using this board right now, go directly to Section *Start Application Development*.

What You Need

- 1 × ESP-WROVER-KIT V2 board
- 1 x Micro USB 2.0 Cable, Type A to Micro B
- 1 × PC loaded with Windows, Linux or Mac OS

Overview

The ESP-WROVER-KIT is a development board produced by Espressif built around ESP32. This board is compatible with ESP32 modules, including the ESP-WROOM-32 and ESP32-WROVER. The ESP-WROVER-KIT features support for an LCD and MicroSD card. The I/O pins have been broken out from the ESP32 module for easy extension. The board carries an advanced multi-protocol USB bridge (the FTDI FT2232HL), enabling developers to use JTAG directly to debug the ESP32 through the USB interface. The development board makes secondary development easy and cost-effective.

注解: ESP-WROVER-KIT V2 integrates the ESP-WROOM-32 module by default.

Functionality Overview

Block diagram below presents main components of ESP-WROVER-KIT and interconnections between components.

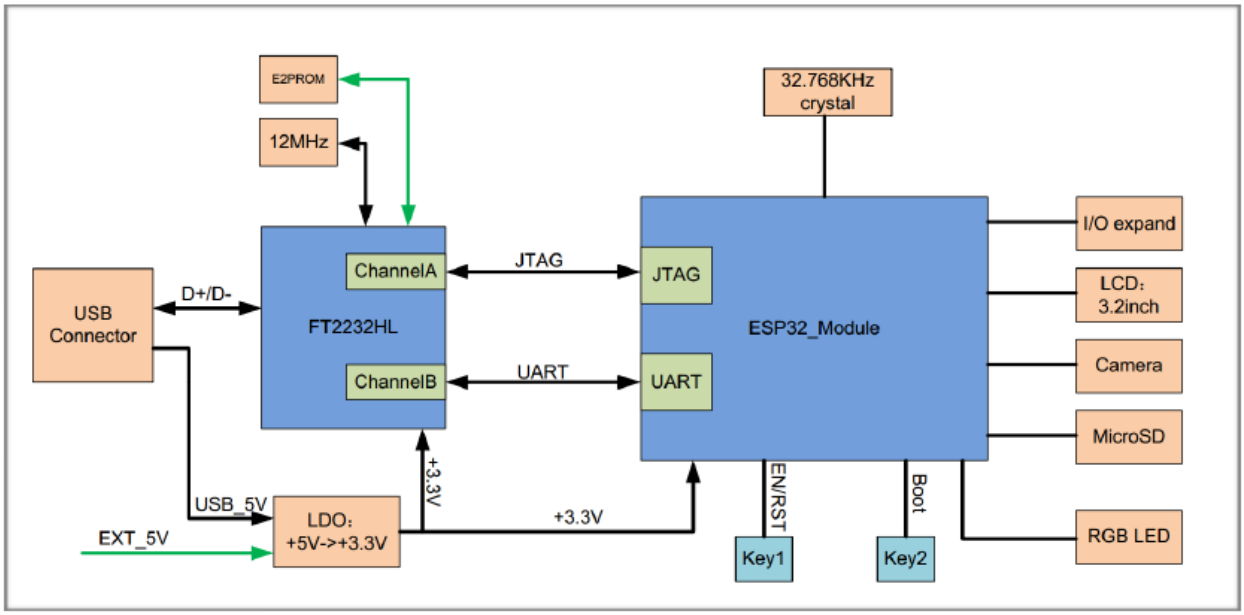

图 8: ESP-WROVER-KIT block diagram

Functional Description

The following list and figures below describe key components, interfaces and controls of ESP-WROVER-KIT board.

32.768 kHz An external precision 32.768 kHz crystal oscillator provides the chip with a clock of low-power consumption during the Deep-sleep mode.

ESP32 Module ESP-WROVER-KIT is compatible with both ESP-WROOM-32 and ESP32-WROVER. The ESP32-WROVER module features all the functions of ESP-WROOM-32 and integrates an external 32-MBit PSRAM for flexible extended storage and data processing capabilities.

注解: GPIO16 and GPIO17 are used as the CS and clock signal for PSRAM. To ensure reliable performance, the two GPIOs are not broken out.

CTS/RTS Serial port flow control signals: the pins are not connected to the circuitry by default. To enable them, respective pins of JP14 must be shorted with jumpers.

UART Serial port: the serial TX/RX signals on FT2232HL and ESP32 are broken out to the two sides of JP11. By default, the two signals are connected with jumpers. To use the ESP32 module serial interface only, the jumpers may be removed and the module can be connected to another external serial device.

SPI SPI interface: the SPI interface connects to an external flash (PSRAM). To interface another SPI device, an extra CS signal is needed. If an ESP32-WROVER is being used, please note that the electrical level on the flash and SRAM is 1.8V.

JTAG JTAG interface: the JTAG signals on FT2232HL and ESP32 are broken out to the two sides of JP8. By default, the two signals are disconnected. To enable JTAG, shorting jumpers are required on the signals.

FT2232 FT2232 chip is a multi-protocol USB-to-serial bridge. The FT2232 chip features USB-to-UART and USB-to-JTAG functionalities. Users can control and program the FT2232 chip through the USB interface to establish communication with ESP32.

The embedded FT2232 chip is one of the distinguishing features of the ESP-WROVER-KIT. It enhances users' convenience in terms of application development and debugging. In addition, uses do not need to buy a JTAG debugger separately, which reduces the development cost, see ESP-WROVER-KIT V2 schematic.

EN Reset button: pressing this button resets the system.

Boot Download button: holding down the **Boot** button and pressing the **EN** button initiates the firmware download mode. Then user can download firmware through the serial port.

USB USB interface. It functions as the power supply for the board and the communication interface between PC and ESP32 module.

Power Select Power supply selection interface: the ESP-WROVER-KIT can be powered through the USB interface or the 5V Input interface. The user can select the power supply with a jumper. More details can be found in Section *Setup Options*, jumper header JP7.

Power Key Power on/off button: toggling to the right powers the board on; toggling to the left powers the board off.

5V Input The 5V power supply interface is used as a backup power supply in case of full-load operation.

LDO NCP1117(1A). 5V-to-3.3V LDO. (There is an alternative pin-compatible LDO —LM317DCY, with an output current of up to 1.5A). NCP1117 can provide a maximum current of 1A. The LDO solutions are available with both fixed output voltage and variable output voltage. For details please refer to ESP-WROVER-KIT V2 schematic.

Camera Camera interface: a standard OV7670 camera module is supported.

RGB Red, green and blue (RGB) light emitting diodes (LEDs), which may be controlled by pulse width modulation (PWM).

I/O All the pins on the ESP32 module are led out to the pin headers on the ESPWROVER-KIT. Users can program ESP32 to enable multiple functions such as PWM, ADC, DAC, I2C, I2S, SPI, etc.

Micro SD Card Micro SD card slot for data storage: when ESP32 enters the download mode, GPIO2 cannot be held high. However, a pull-up resistor is required on GPIO2 to enable the Micro SD Card. By default, GPIO2 and the pull-up resistor R153 are disconnected. To enable the SD Card, use jumpers on JP1 as shown in Section *Setup Options*.

LCD ESP-WROVER-KIT supports mounting and interfacing a 3.2" SPI (standard 4-wire Serial Peripheral Interface) LCD, as shown on figure *ESP-WROVER-KIT board layout - back*.

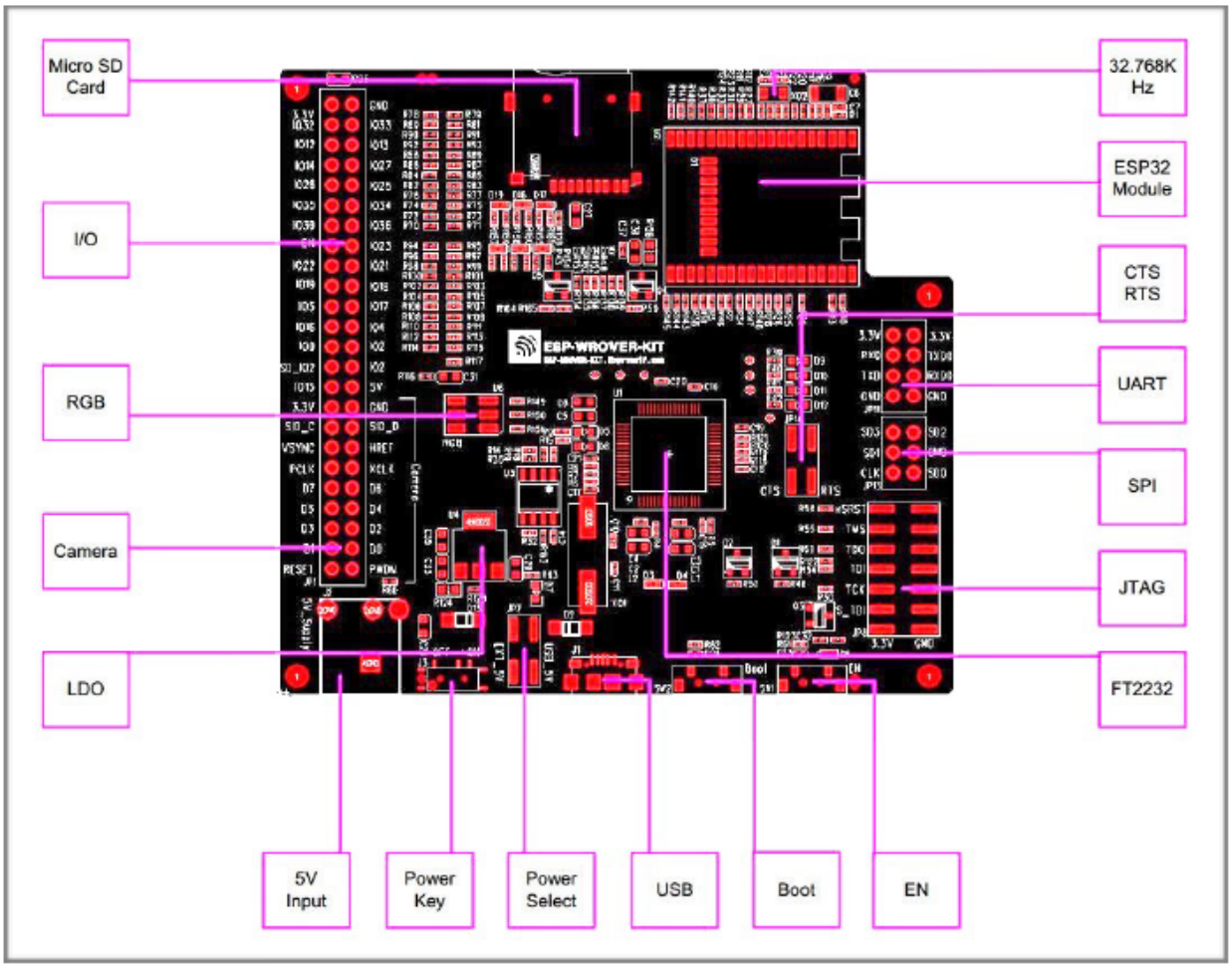

图 9: ESP-WROVER-KIT board layout - front

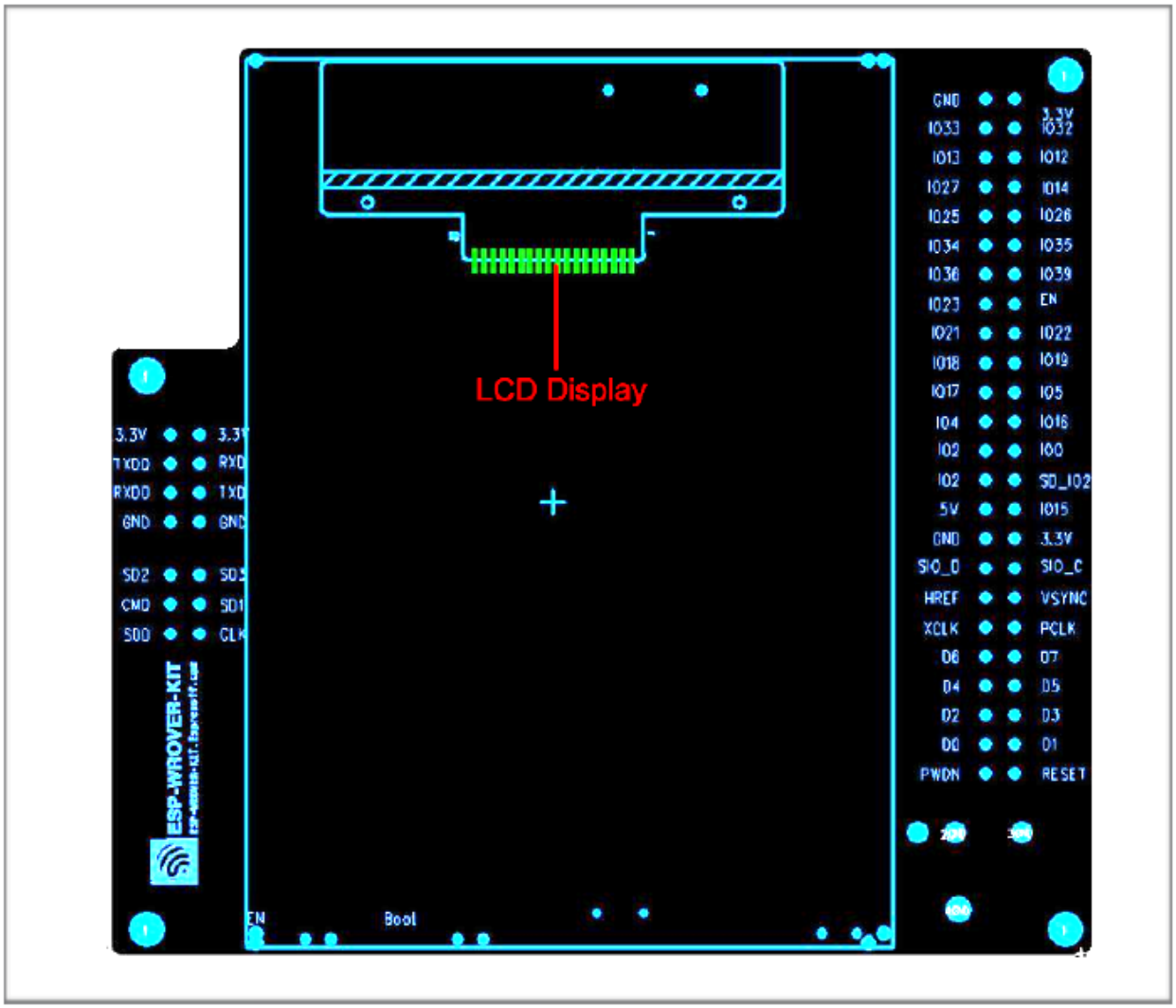

图 10: ESP-WROVER-KIT board layout - back

Setup Options

There are five jumper headers available to set up the board functionality. Typical options to select from are listed in table below.

Header	Jumper Setting	Description of Functionality
JP1	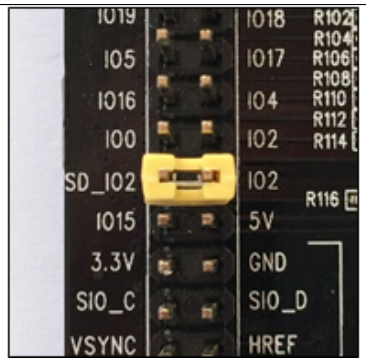	Enable pull up for the Micro SD Card
JP1	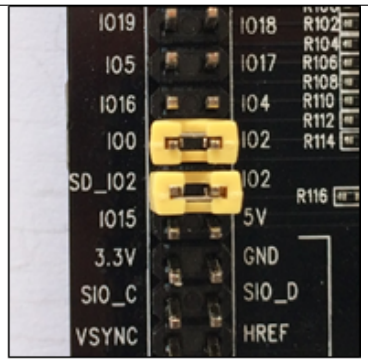	Assert GPIO2 low during each download (by jumping it to GPIO0)
JP7	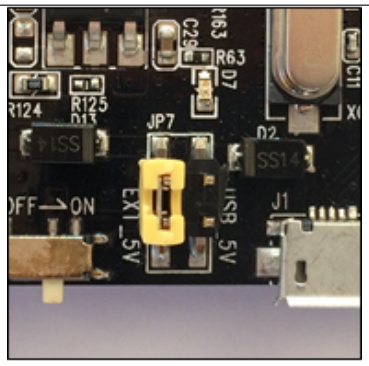	Power ESP-WROVER-KIT board from an external power supply
JP7	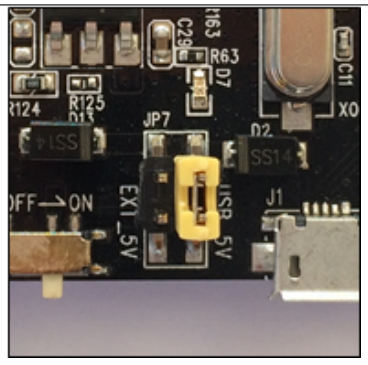	Power ESP-WROVER-KIT board from an USB port
	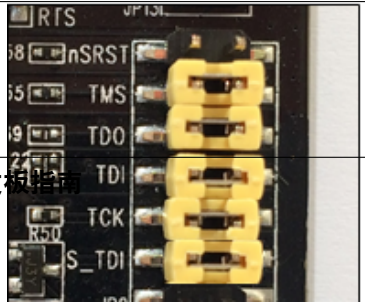	

Start Application Development

Before powering up the ESP-WROVER-KIT, please make sure that the board has been received in good condition with no obvious signs of damage.

Initial Setup

Select the source of power supply for the board by setting jumper JP7. The options are either USB port or an external power supply. For this application selection of USB port is sufficient. Enable UART communication by installing jumpers on JP11. Both selections are shown in table below.

Power up from USB port	Enable UART communication
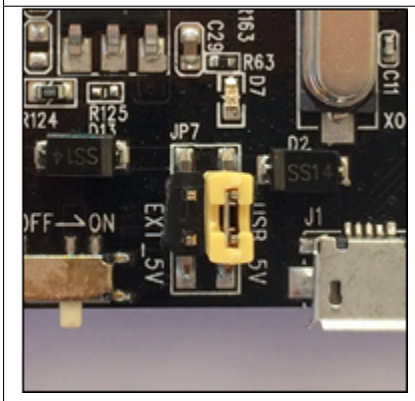	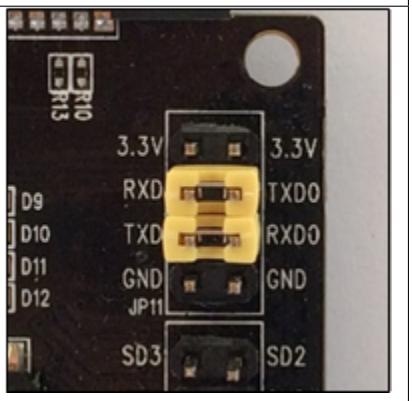

Do not install any other jumpers.

Now to Development

To start development of applications, proceed to Section *快速入门 (CMake)*, that will walk you through the *开发板指南*.

Related Documents

- ESP-WROVER-KIT V2 schematic (PDF)
- ESP32 Datasheet (PDF)
- ESP-WROOM-32 Datasheet (PDF)
- ESP32-WROVER Datasheet (PDF)
- *JTAG 调试*
- *ESP32 H/W 硬件参考*

2.3.3 ESP32-PICO-KIT V4 Getting Started Guide (CMake)

This user guide shows how to get started with the ESP32-PICO-KIT V4 mini development board. For description of other versions of the ESP32-PICO-KIT check *ESP32 H/W 硬件参考*.

What You Need

- 1 × *ESP32-PICO-KIT V4 mini development board*
- 1 × USB A / Micro USB B cable
- 1 × PC loaded with Windows, Linux or Mac OS

If you want to start using this board right now, go directly to Section *Start Application Development*.

Overview

ESP32-PICO-KIT V4 is a mini development board produced by Espressif. At the core of this board is the ESP32-PICO-D4, a System-in-Package (SIP) module with complete Wi-Fi and Bluetooth functionalities. Comparing to other ESP32 chips, the ESP32-PICO-D4 integrates several peripheral components in one single package, that otherwise would need to be installed separately. This includes a 40 MHz crystal oscillator, 4 MB flash, filter capacitors and RF matching links in. This greatly reduces quantity and costs of additional components, subsequent assembly and testing cost, as well as overall product complexity.

The development board integrates a USB-UART Bridge circuit, allowing the developers to connect the board to a PC' s USB port for downloads and debugging.

For easy interfacing, all the IO signals and system power on ESP32-PICO-D4 are led out through two rows of 20 x 0.1" pitch header pads on both sides of the development board. To make the ESP32-PICO-KIT V4 fit into mini breadboards, the header pads are populated with two rows of 17 pin headers. Remaining 2 x 3 pads grouped on each side of the board besides the antenna are not populated. The remaining 2 x 3 pin headers may be soldered later by the user.

注解: The 2 x 3 pads not populated with pin headers are internally connected to the flash memory embedded in the ESP32-PICO-D4 SIP module. For more details see module' s datasheet in *Related Documents*.

The board dimensions are 52 x 20.3 x 10 mm (2.1" x 0.8" x 0.4"), see Section *Board Dimensions*. An overview functional block diagram is shown below.

Functional Description

The following list and figure below describe key components, interfaces and controls of ESP32-PICO-KIT V4 board.

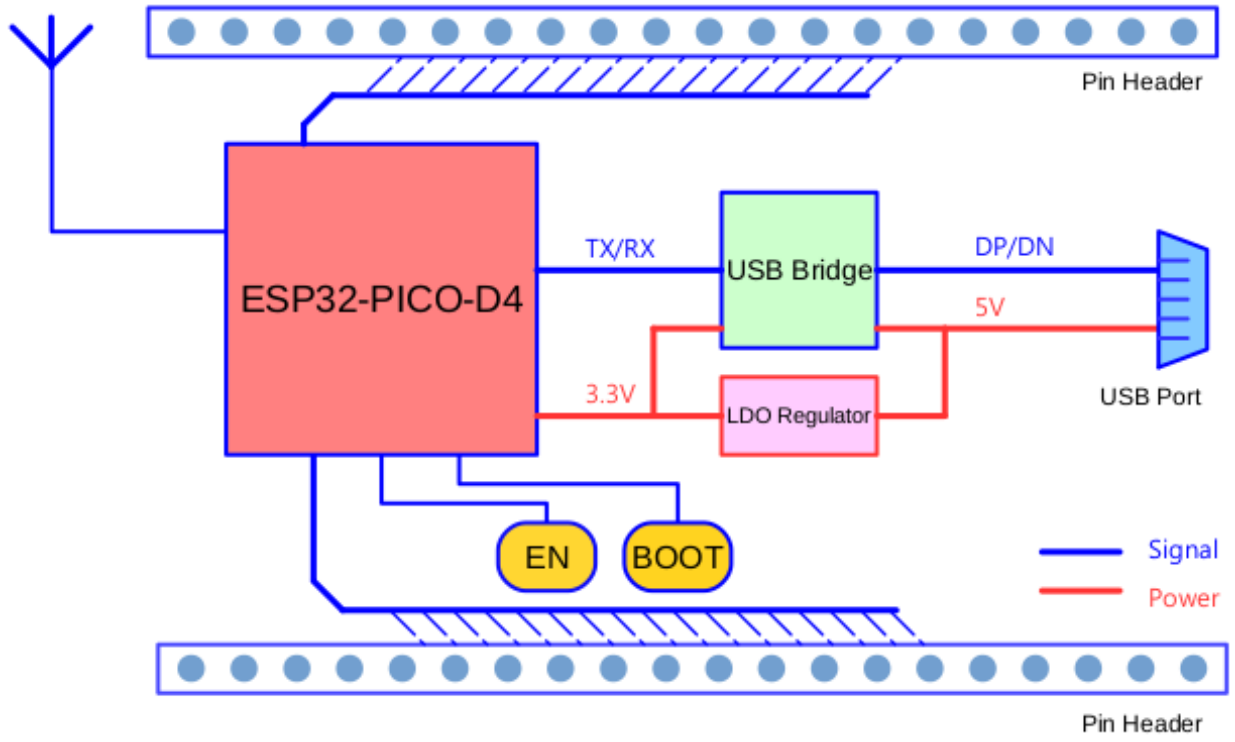

图 11: ESP32-PICO-KIT V4 functional block diagram

ESP32-PICO-D4 Standard ESP32-PICO-D4 module soldered to the ESP32-PICO-KIT V4 board. The complete system of the ESP32 chip has been integrated into the SIP module, requiring only external antenna with LC matching network, decoupling capacitors and pull-up resistors for EN signals to function properly.

LDO 5V-to-3.3V Low dropout voltage regulator (LDO).

USB-UART Bridge A single chip USB-UART bridge provides up to 1 Mbps transfers rates.

Micro USB Port USB interface. It functions as the power supply for the board and the communication interface between PC and ESP32-PICO-KIT V4.

5V Power On LED This light emitting diode lits when the USB or an external 5V power supply is applied to the board. For details see schematic in *Related Documents*.

I/O All the pins on ESP32-PICO-D4 are broken out to the pin headers on the board. Users can program ESP32 to enable multiple functions such as PWM, ADC, DAC, I2C, I2S, SPI, etc. For details please see Section *Pin Descriptions*.

BOOT Button Holding down the Boot button and pressing the EN button initiates the firmware download mode. Then user can download firmware through the serial port.

EN Button Reset button; pressing this button resets the system.

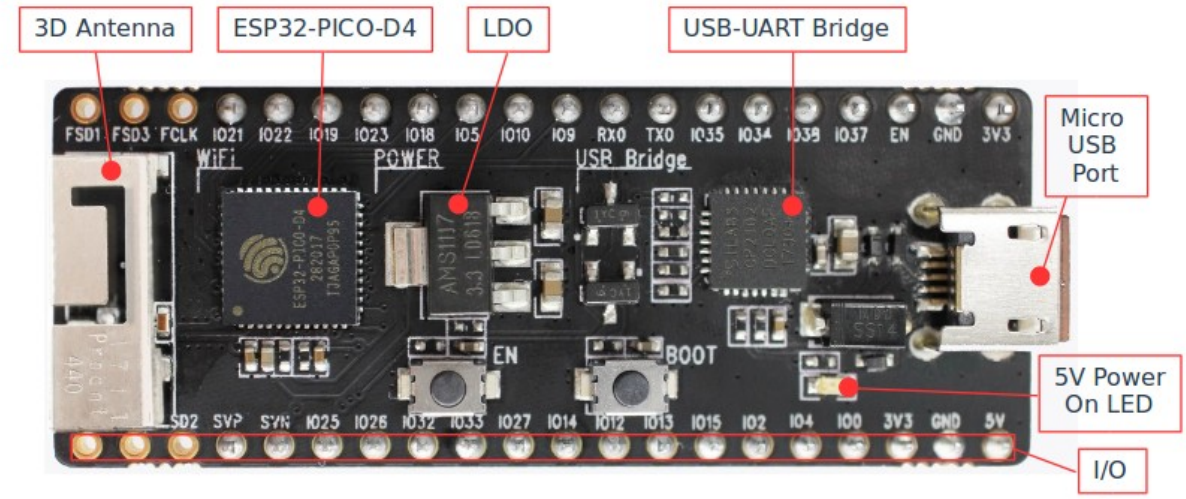

图 12: ESP32-PICO-KIT V4 board layout

Power Supply Options

There following options are available to provide power supply to the ESP32-PICO-KIT V4:

1. Micro USB port, this is default power supply connection
2. 5V / GND header pins
3. 3V3 / GND header pins

> **警告:** Above options are mutually exclusive, i.e. the power supply may be provided using only one of the above options. Attempt to power the board using more than one connection at a time may damage the board and/or the power supply source.

Start Application Development

Before powering up the ESP32-PICO-KIT V4, please make sure that the board has been received in good condition with no obvious signs of damage.

To start development of applications, proceed to Section *快速入门 (CMake)*, that will walk you through the *开发板指南*.

Pin Descriptions

The two tables below provide the **Name** and **Function** of I/O headers on both sides of the board, see *ESP32-PICO-KIT V4 board layout*. The pin numbering and header names are the same as on a schematic in *Related Documents*.

Header J2

No.	Name	Type	Function
1	FLASH_SD1 (FSD1)	I/O	GPIO8, SD_DATA1, SPID, HS1_DATA1 *(1)* , U2CTS
2	FLASH_SD3 (FSD3)	I/O	GPIO7, SD_DATA0, SPIQ, HS1_DATA0 *(1)* , U2RTS
3	FLASH_CLK (FCLK)	I/O	GPIO6, SD_CLK, SPICLK, HS1_CLK *(1)* , U1CTS
4	IO21	I/O	GPIO21, VSPIHD, EMAC_TX_EN
5	IO22	I/O	GPIO22, VSPIWP, U0RTS, EMAC_TXD1
6	IO19	I/O	GPIO19, VSPIQ, U0CTS, EMAC_TXD0
7	IO23	I/O	GPIO23, VSPID, HS1_STROBE
8	IO18	I/O	GPIO18, VSPICLK, HS1_DATA7
9	IO5	I/O	GPIO5, VSPICS0, HS1_DATA6,

Header J3

No.	Name	Type	Function
1	FLASH_CS (FCS)	I/O	GPIO16, HS1_DATA4 *(1)* , U2RXD, EMAC_CLK_OUT
2	FLASH_SD0 (FSD0)	I/O	GPIO17, HS1_DATA5 *(1)* , U2TXD, EMAC_CLK_OUT_180
3	FLASH_SD2 (FSD2)	I/O	GPIO11, SD_CMD, SPICS0, HS1_CMD *(1)* , U1RTS
4	SENSOR_VP (FSVP)	I	GPIO36, ADC1_CH0, ADC_PRE_AMP *(2a)* , RTC_GPIO0
5	SENSOR_VN (FSVN)	I	GPIO39, ADC1_CH3, ADC_PRE_AMP *(2b)* , RTC_GPIO3
6	IO25	I/O	GPIO25, DAC_1, ADC2_CH8, RTC_GPIO6, EMAC_RXD0
7	IO26	I/O	GPIO26, DAC_2, ADC2_CH9, RTC_GPIO7, EMAC_RXD1
2.3. 开发板指南			**115**
8	IO32	I/O	32K_XP *(3a)* ,

Notes to *Pin Descriptions*

1. This pin is connected to the flash pin of ESP32-PICO-D4.
2. When used as ADC_PRE_AMP, connect 270 pF capacitors between: (a) SENSOR_VP and IO37, (b) SENSOR_VN and IO38.
3. 32.768 kHz crystal oscillator: (a) input, (b) output.
4. This pin is connected to the pin of the USB bridge chip on the board.
5. The operating voltage of ESP32-PICO-KIT' s embedded SPI flash is 3.3V. Therefore, the strapping pin MTDI should hold bit " 0" during the module power-on reset.

Board Dimensions

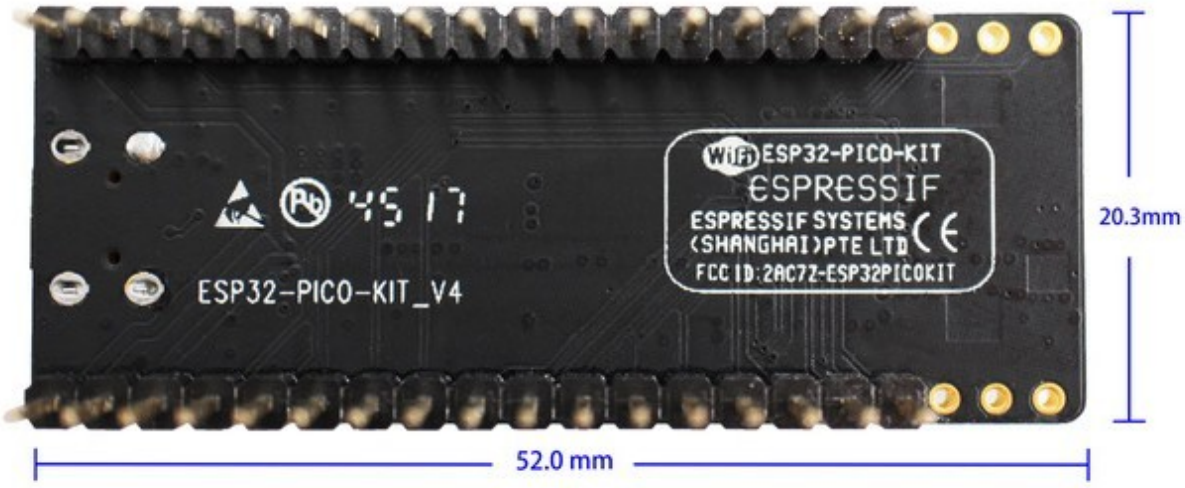

图 13: ESP32-PICO-KIT V4 dimensions - back

Related Documents

- ESP32-PICO-KIT V4 schematic (PDF)
- ESP32-PICO-D4 Datasheet (PDF)
- *ESP32 H/W 硬件参考*

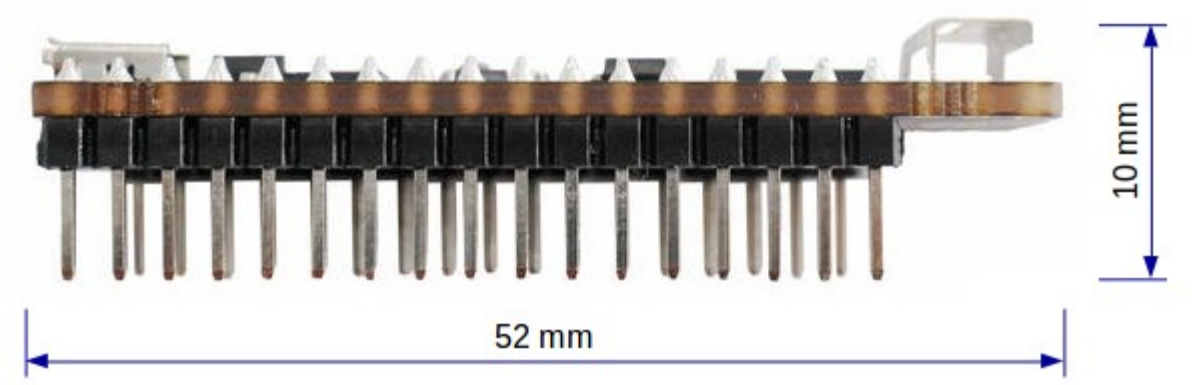

图 14: ESP32-PICO-KIT V4 dimensions - side

ESP32-PICO-KIT V3 Getting Started Guide (CMake)

This user guide shows how to get started with the ESP32-PICO-KIT V3 mini development board. For description of other versions of the ESP32-PICO-KIT check *ESP32 H/W 硬件参考*.

What You Need

- 1 × ESP32-PICO-KIT V3 mini development board
- 1 × USB A / Micro USB B cable
- 1 × PC loaded with Windows, Linux or Mac OS

If you want to start using this board right now, go directly to Section *Start Application Development*.

Overview

ESP32-PICO-KIT V3 is a mini development board based on the ESP32-PICO-D4 SIP module produced by Espressif. All the IO signals and system power on ESP32-PICO-D4 are led out through two standard 20 pin x 0.1" pitch headers on both sides for easy interfacing. The development board integrates a USB-UART Bridge circuit, allowing the developers to connect the development board to a PC' s USB port for downloads and debugging.

Functional Description

The following list and figure below describe key components, interfaces and controls of ESP32-PICO-KIT V3 board.

ESP32-PICO-D4 Standard ESP32-PICO-D4 module soldered to the ESP32-PICO-KIT V3 board. The complete system of the ESP32 chip has been integrated into the SIP module, requiring only external antenna with LC matching network, decoupling capacitors and pull-up resistors for EN signals to function properly.

USB-UART Bridge A single chip USB-UART bridge provides up to 1 Mbps transfers rates.

I/O All the pins on ESP32-PICO-D4 are broken out to the pin headers on the board. Users can program ESP32 to enable multiple functions such as PWM, ADC, DAC, I2C, I2S, SPI, etc.

Micro USB Port USB interface. It functions as the power supply for the board and the communication interface between PC and ESP32-PICO-KIT V3.

EN Button Reset button; pressing this button resets the system.

BOOT Button Holding down the Boot button and pressing the EN button initiates the firmware download mode. Then user can download firmware through the serial port.

Start Application Development

Before powering up the ESP32-PICO-KIT V3, please make sure that the board has been received in good condition with no obvious signs of damage.

To start development of applications, proceed to Section *快速入门 (CMake)*, that will walk you through the *开发板指南*.

Related Documents

- ESP32-PICO-KIT V3 schematic (PDF)
- ESP32-PICO-D4 Datasheet (PDF)
- *ESP32 H/W 硬件参考*

如果你使用其它开发板，请查看下面的内容。

2.4 设置工具链

用 ESP32 进行开发最快的方法是安装预编译的工具链。请根据你的操作系，点击对应的链接，并按照链接中的指导进行安装。

2.4.1 Windows 平台工具链的标准设置 (CMake)

[英文]

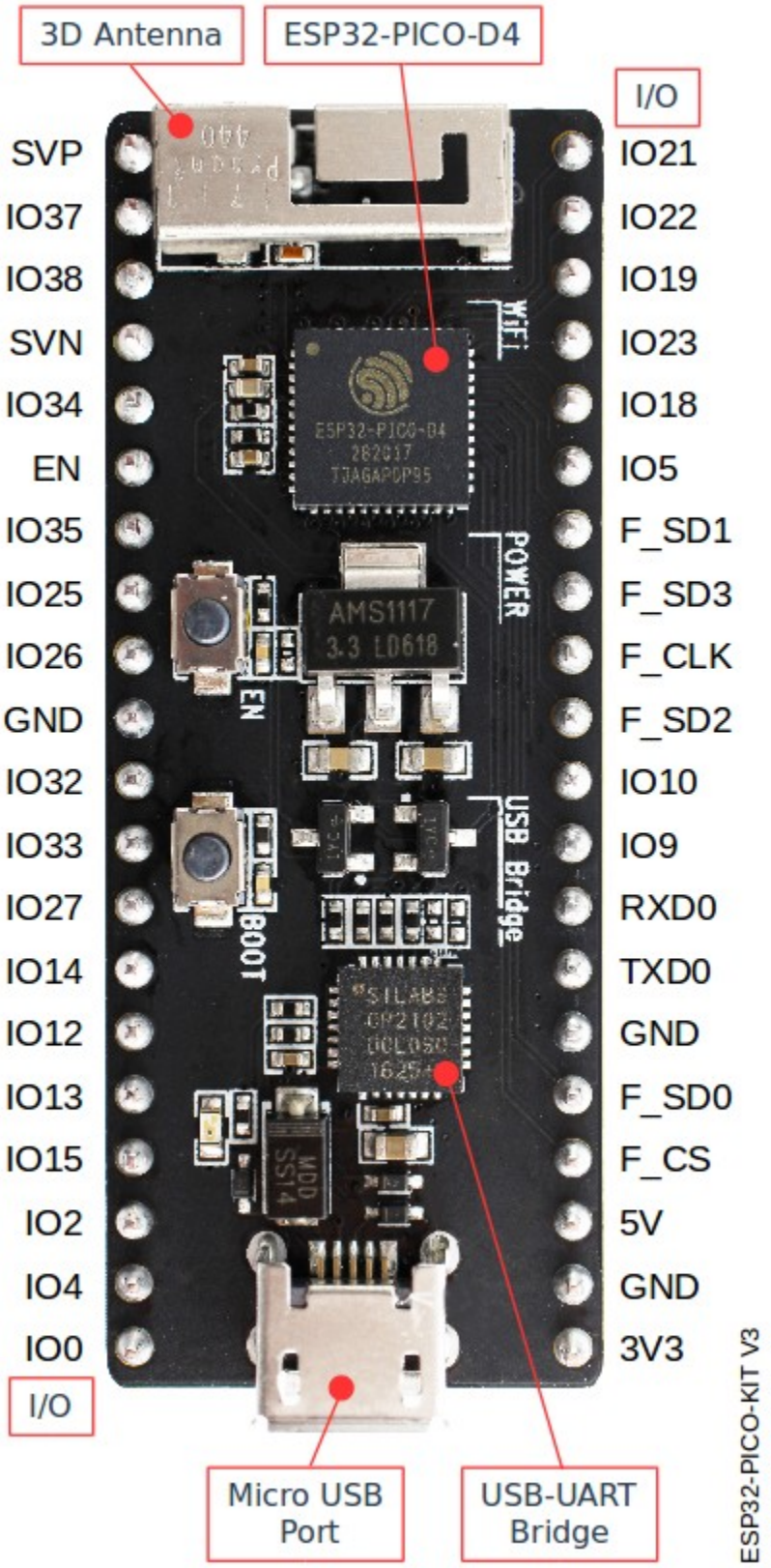

图 15: ESP32-PICO-KIT V3 board layout

注解： 本文档将介绍如何使用 CMake 编译系统。目前，CMake 编译系统仍处于预览发布阶段，如您在使用中遇到任何问题，请前往 ESP-IDF 提交 Issues。

未来，CMake 编译系统将在 ESP-IDF v4.0 发布后过渡为默认编译系统，现行基于 GNU Make 的编译系统将在 ESP-IDF v5.0 后弃用。

注解： 基于 CMake 的构建系统仅支持 64 位版本 Windows。

引言

ESP-IDF 需要安装必要的工具，以编译 ESP32 固件，包括：Git，交叉编译器，以及 CMake 构建工具。本文将对这些工具一一说明。

在此入门指南中，我们通过命令提示符进行有关操作。不过，安装 ESP-IDF 后你还可以使用*Eclipse* 或支持 CMake 的图形化工具 IDE。

注解： 基于 GNU Make 的构建系统要求 Windows 系统兼容 MSYS2 Unix。基于 CMake 的构建系统则无此要求。

ESP-IDF 工具安装器

安装 ESP-IDF 必备工具最简易的方式是下载 ESP-IDF 工具安装器，地址如下：

https://dl.espressif.com/dl/esp-idf-tools-setup-1.1.exe

安装器会自动安装 ESP32 Xtensa gcc 工具链，Ninja 编译工具，以及名为 mconf-idf 的配置工具。此外，如果你的电脑还未安装有关 CMake 和 Python 2.7 的安装器，它还可以下载和运行与之对应的安装器。

安装器默认更新 Windows `Path` 环境变量，因而上述工具也可在其他环境中运行。如果禁止该选项，则需自行设置 ESP-IDF 所使用的环境（终端或所选 IDE），并配置正确的路径。

请注意，此安装器仅针对 ESP-IDF 工具包，并不包括 ESP-IDF。

安装 Git

ESP-IDF 工具安装器并不会安装 Git，因为快速入门指南默认你将以命令行的模式使用它。你可以通过 Git For Windows 下载和安装 Windows 平台的命令行 Git 工具（包括“Git Bash”终端）。

如果你想使用其他图形化 Git 客户端，如 *Github Desktop*，你可以自行安装，并在快速入门中阐释相应 Git 命令，以使用你所选的 Git 客户端。

使用终端

在快速入门指南接下来的步骤说明中，我们将使用终端命令提示符进行有关操作。你也可以使用任何其他形式的命令提示符：

- 比如，Windows 开始菜单下内置的 Command Prompt。本文档中的所有 Windows 命令行指示均为 Windows Command Prompt 中所使用的 “batch” 命令。
- 你还可以使用 Git for Windows 中的 “Git Bash” 终端，其所使用的 “bash” 命令提示符语法与 Mac OS 或 Linux 的既定语法相同。安装此终端后，你可以在开始菜单下找到命令提示符窗口。
- 如果你已安装 MSYS2_（通过 ESP-IDF 之前版本），你还可以使用 MSYS 终端。

后续步骤

要继续设置开发环境，请参照*获取 ESP-IDF*。

相关文档

想要自定义安装流程的高阶用户可参照：

从零开始设置 Windows 环境下的工具链 (CMake)

[英文]

注解： 本文档将介绍如何使用 CMake 编译系统。目前，CMake 编译系统仍处于预览发布阶段，如您在使用中遇到任何问题，请前往 ESP-IDF 提交 Issues。

未来，CMake 编译系统将在 ESP-IDF v4.0 发布后过渡为默认编译系统，现行基于 GNU Make 的编译系统将在 ESP-IDF v5.0 后弃用。

本文就如何运行基于 CMake 构建系统中的*ESP-IDF 工具安装器* 进行逐步详细说明。手动安装所有工具能更好地控制整个安装流程，同时也方便高阶用户进行自定义安装。

使用 ESP-IDF 工具安装器对工具链及其他工具进行快速标准设置，请参照*Windows 平台工具链的标准设置 (CMake)*。

注解： 基于 GNU Make 的构建系统要求 Windows 兼容 MSYS2 Unix。基于 CMake 的构建系统则无此要求。

工具

cmake

下载最新发布的 Windows 平台稳定版*CMake*，并运行安装器。

当安装器询问安装选项时，选择 “Add CMake to the system PATH for all users”（为所有用户的系统路径添加 CMake）或 “Add CMake to the system PATH for the current user”（为当前用户的系统路径添加 CMake）。

Ninja 编译工具

注解: Ninja 目前仅为 64 位版本 Windows 提供 bin 文件。你也可以通过其他编译工具使用 CMake 和 `idf.py`，如适用于 32 位 Windows 的 mingw-make，但是目前暂无关于此工具的说明文档。

从（下载页面）下载最新发布的 Windows 平台稳定版 ninja。

适用于 Windows 平台的 Ninja 下载文件是一个.zip 文件，包含一个 `ninja.exe` 文件。将其解压到目录，并添加到你的路径 （或者选择你的路径中已有的目录）。

Python 2.x

下载并运行适用于 Windows 安装器的最新版 Python 2.7。

Python 安装的 “自定义” 那一步提供了一份选项列表，最后一个选项是 “Add python.exe to Path”（添加 python.exe 到路径中），更改该选项，选择 “Will be installed”（将会安装）。

Python 安装完成后，打开 Windows 开始菜单下的 Command Prompt，并运行以下命令:

```
pip install pyserial
```

适用于 IDF 的 MConf

从 kconfig-frontends 发布页面 下载配置工具 mconf-idf。此为 `mconf` 配置工具，可针对 ESP-IDF 进行一些自定义操作。

你需将此工具解压到目录，然后 添加到你的路径。

工具链设置

从 dl.espressif.com 下载预编译的 Windows 平台工具链:

https://dl.espressif.com/dl/xtensa-esp32-elf-win32-1.22.0-97-gc752ad5-5.2.0.zip

解压压缩包文件到 `C:\Program Files` （或其他地址）。压缩包文件包含 `xtensa-esp32-elf` 目录。

然后，须将该目录下的子目录 `bin` 添加到你的路径。例如，`C:\Program Files\xtensa-esp32-elf\bin`。

注解： 如果你已安装 MSYS2 环境（适用 “GNU Make” 构建系统），你可以跳过下载那一步，直接添加目录 `C:\msys32\opt\xtensa-esp32-elf\bin` 到路径，因为 MSYS2 环境已包含工具链。

添加目录到路径

添加任何新目录到你的 Windows Path 环境变量：

打开系统控制面板，找到环境变量对话框（对于 Windows 10，则在高级系统设置中查找对话框）。

双击 `Path` 变量（选择用户或系统路径，这取决于你是否希望其他用户路径中也存在该目录）。在最后数值那里新添 `;<new value>`。

后续步骤

要继续设置开发环境，请参照获取 *ESP-IDF*。

2.4.2 Linux 平台工具链的标准设置 (CMake)

[英文]

注解： 本文档将介绍如何使用 CMake 编译系统。目前，CMake 编译系统仍处于预览发布阶段，如您在使用中遇到任何问题，请前往 ESP-IDF 提交 Issues。

未来，CMake 编译系统将在 ESP-IDF v4.0 发布后过渡为默认编译系统，现行基于 GNU Make 的编译系统将在 ESP-IDF v5.0 后弃用。

安装前提

编译 ESP-IDF 需要以下软件包：

- CentOS 7:

```
sudo yum install git wget ncurses-devel flex bison gperf python pyserial cmake␣
↪ninja-build ccache
```

- Ubuntu 和 Debian:

```
sudo apt-get install git wget libncurses-dev flex bison gperf python python-pip␣
↪python-setuptools python-serial python-cryptography python-future python-
↪pyparsing cmake ninja-build ccache libffi-dev libssl-dev
```

- Arch:

```
sudo pacman -S --needed gcc git make ncurses flex bison gperf python2-pyserial␣
↪python2-cryptography python2-future python2-pyparsing cmake ninja ccache
```

注解： 使用 ESP-IDF 需要 CMake 3.5 或以上版本。较早版本的 Linux 可能需要升级才能向后移植仓库，或安装“cmake3”软件包，而不是安装“cmake”。

工具链的设置

Linux 版的 ESP32 工具链可以从 Espressif 的网站下载：

- 64 位 Linux：

  https://dl.espressif.com/dl/xtensa-esp32-elf-linux64-1.22.0-97-gc752ad5-5.2.0.tar.gz

- 32 位 Linux：

  https://dl.espressif.com/dl/xtensa-esp32-elf-linux32-1.22.0-97-gc752ad5-5.2.0.tar.gz

1. 下载完成后，将它解压到 `~/esp` 目录：

   - for 64-bit Linux:

     ```
     mkdir -p ~/esp
     cd ~/esp
     tar -xzf ~/Downloads/xtensa-esp32-elf-linux64-1.22.0-97-gc752ad5-5.2.0.tar.gz
     ```

   - for 32-bit Linux:

     ```
     mkdir -p ~/esp
     cd ~/esp
     tar -xzf ~/Downloads/xtensa-esp32-elf-linux32-1.22.0-97-gc752ad5-5.2.0.tar.gz
     ```

2. 工具链将会被解压到 `~/esp/xtensa-esp32-elf/` 目录。

   要使用工具链，你还需要在 `~/.profile` 文件中更新环境变量 `PATH`。要使 `xtensa-esp32-elf` 在所有的终端会话中都有效，需要将下面这一行代码添加到你的 `~/.profile` 文件中：：

   ```
   export PATH="$HOME/esp/xtensa-esp32-elf/bin:$PATH"
   ```

或者，你也可以给上面的命令创建一个别名。这样做的好处是，你仅在需要时才获取工具链，将下面这行代码添加到 ~/.profile 文件中即可:

```
alias get_esp32='export PATH="$HOME/esp/xtensa-esp32-elf/bin:$PATH"'
```

然后，当你需要使用工具链时，在命令行输入 get_esp32，然后工具链会自动添加到你的 PATH 中。

注解: 如果将 /bin/bash 设置为登录 shell，且同时存在 .bash_profile 和 .profile，则更新 .bash_profile。

---

3. 退出并重新登录以使 .profile 更改生效。运行以下命令来检查 PATH 设置是否正确：：

```
printenv PATH
```

检查字符串的开头是否包含类似的工具链路径:

```
  $ printenv PATH
  /home/user-name/esp/xtensa-esp32-elf/bin:/home/user-name/bin:/home/user-name/.
↪local/bin:/usr/local/sbin:/usr/local/bin:/usr/sbin:/usr/bin:/sbin:/bin:/usr/
↪games:/usr/local/games:/snap/bin

除了 ``/home/user-name``，应该有具体的安装的主路径。
```

权限问题 /dev/ttyUSB0

使用某些 Linux 版本向 ESP32 烧写固件时，可能会出现 Failed to open port /dev/ttyUSB0 错误消息。此时，可以将当前用户增加至:ref:‘ Linux Dialout 组 <linux-dialout-group-cmake>‘

Arch Linux 用户

在 Arch Linux 中运行预编译的 gdb (xtensa-esp32-elf-gdb) 需要 ncurses 5，但是 Arch 使用的是 ncurses 6。

AUR 中存在向下兼容的库文件，可用于本地和 lib32 的配置:

- https://aur.archlinux.org/packages/ncurses5-compat-libs/
- https://aur.archlinux.org/packages/lib32-ncurses5-compat-libs/

在安装这些软件包之前，你可能需要将作者的公钥添加到你的密钥环中，具体见上方链接中的 “Comments” 部分的介绍。

或者，你也可以使用 crosstool-NG 编译一个链接到 ncurses 6 的 gdb。

后续步骤

后续开发环境设置，请参考*获取 ESP-IDF* 一节。

相关文档

从零开始设置 Linux 环境下的工具链 (CMake)

[English]

注解： 本文档将介绍如何使用 CMake 编译系统。目前，CMake 编译系统仍处于预览发布阶段，如您在使用中遇到任何问题，请前往 ESP-IDF 提交 Issues。

未来，CMake 编译系统将在 ESP-IDF v4.0 发布后过渡为默认编译系统，现行基于 GNU Make 的编译系统将在 ESP-IDF v5.0 后弃用。

除了从乐鑫官网直接下载已编译好的二进制工具链外，你还可以按照本文介绍，从头开始设置你自己的工具链。如需快速使用已编译好的二进制工具链，可回到*Linux 平台工具链的标准设置 (CMake)* 章节。

安装准备

编译 ESP-IDF 需要以下软件包：

- CentOS 7:

```
sudo yum install git wget ncurses-devel flex bison gperf python pyserial cmake␣
↪ninja-build ccache
```

- Ubuntu 和 Debian:

```
sudo apt-get install git wget libncurses-dev flex bison gperf python python-pip␣
↪python-setuptools python-serial python-cryptography python-future python-
↪pyparsing cmake ninja-build ccache libffi-dev libssl-dev
```

- Arch:

```
sudo pacman -S --needed gcc git make ncurses flex bison gperf python2-pyserial␣
↪python2-cryptography python2-future python2-pyparsing cmake ninja ccache
```

注解： 使用 ESP-IDF 需要 CMake 3.5 或以上版本。较早版本的 Linux 可能需要升级才能向后移植仓库，或安装“cmake3”软件包，而不是安装“cmake”。

从源代码编译工具链

- 安装依赖：
  - CentOS 7:

```
sudo yum install gawk gperf grep gettext ncurses-devel python python-devel␣
↪automake bison flex texinfo help2man libtool make
```

  - Ubuntu pre-16.04:

```
sudo apt-get install gawk gperf grep gettext libncurses-dev python python-dev␣
↪automake bison flex texinfo help2man libtool make
```

  - Ubuntu 16.04:

```
sudo apt-get install gawk gperf grep gettext python python-dev automake bison␣
↪flex texinfo help2man libtool libtool-bin make
```

  - Debian 9:

```
sudo apt-get install gawk gperf grep gettext libncurses-dev python python-dev␣
↪automake bison flex texinfo help2man libtool libtool-bin make
```

  - Arch:

```
TODO
```

创建工作目录，并进入该目录:

```
mkdir -p ~/esp
cd ~/esp
```

下载并编译 crosstool-NG ：

```
git clone -b xtensa-1.22.x https://github.com/espressif/crosstool-NG.git
cd crosstool-NG
./bootstrap && ./configure --enable-local && make install
```

编译工具链:

```
./ct-ng xtensa-esp32-elf
./ct-ng build
chmod -R u+w builds/xtensa-esp32-elf
```

编译得到的工具链会被保存到 ~/esp/crosstool-NG/builds/xtensa-esp32-elf。请按照标准设置指南 的介绍，将工具链添加到 PATH。

后续步骤

继续设置开发环境，请前往获取 *ESP-IDF* 章节。

2.4.3 在 Mac OS 上安装 ESP32 工具链 (CMake)

[英文]

注解： 本文档将介绍如何使用 CMake 编译系统。目前，CMake 编译系统仍处于预览发布阶段，如您在使用中遇到任何问题，请前往 ESP-IDF 提交 Issues。

未来，CMake 编译系统将在 ESP-IDF v4.0 发布后过渡为默认编译系统，现行基于 GNU Make 的编译系统将在 ESP-IDF v5.0 后弃用。

安装准备

ESP-IDF 将使用 Mac OS 上默认安装的 Python 版本。

- 安装 pip:

```
sudo easy_install pip
```

- 安装 pyserial:

```
sudo pip install pyserial
```

- 安装 CMake 和 Ninja 编译工具：
  - 若有 HomeBrew，你可以运行:

```
brew install cmake ninja
```

  - 若有 MacPorts，你可以运行:

```
sudo port install cmake ninja
```

  - 若以上均不适用，访问 CMake 和 Ninja 主页，查询有关 Mac OS 平台的下载安装问题。
- 强烈建议同时安装 ccache 以达到更快的编写速度。如有 HomeBrew，可通过 MacPorts 上的 `brew install ccache` 或 `sudo port install ccache` 完成安装。

注解： 如在任一步骤中出现以下报错信息:

```
``xcrun: error: invalid active developer path (/Library/Developer/CommandLineTools),␣
↪missing xcrun at: /Library/Developer/CommandLineTools/usr/bin/xcrun``
```

你需要安装 XCode 命令行工具才能继续，具体可运行 `xcode-select --install` 进行安装。

安装工具链

下载 MacOS 版本的 ESP32 工具链，请前往乐鑫官网：

https://dl.espressif.com/dl/xtensa-esp32-elf-macos-1.22.0-97-gc752ad5-5.2.0.tar.gz

完成下载后，请在 `~/esp` 目录下进行解压：

```
mkdir -p ~/esp
cd ~/esp
tar -xzf ~/Downloads/xtensa-esp32-elf-macos-1.22.0-97-gc752ad5-5.2.0.tar.gz
```

此后，该工具链将解压至 `~/esp/xtensa-esp32-elf/` 目录。

为了开始使用工具链，你必须更新 `~/.profile` 文件中的 `PATH` 环境变量。为了让所有终端都可以使用 `xtensa-esp32-elf`，请将下方命令增加至你的 `~/.profile` 文件：：

```
export PATH=$HOME/esp/xtensa-esp32-elf/bin:$PATH
```

此外，你可以为以上命令增加一个别名。这样，你就可以仅在有需要时获取工具链。具体方式是在 `~/.profile` 文件中增加下方命令：：

```
alias get_esp32="export PATH=$HOME/esp/xtensa-esp32-elf/bin:$PATH"
```

此时，你可以直接输入 `get_esp32` 命令，即可将工具链添加至你的 `PATH`。

注意，这里需要退出并重新登陆，`.profile` 更改才会生效。

此外，你可以使用以下命令，验证 `PATH` 是否设置正确：：

```
printenv PATH
```

后续步骤

前往获取 *ESP-IDF*，完成接下来的开发环境配置。

相关文档

从零开始设置 Mac OS 环境下的工具链 (CMake)

[英文]

注解： 本文档将介绍如何使用 CMake 编译系统。目前，CMake 编译系统仍处于预览发布阶段，如您在使用中遇到任何问题，请前往 ESP-IDF 提交 Issues。

未来，CMake 编译系统将在 ESP-IDF v4.0 发布后过渡为默认编译系统，现行基于 GNU Make 的编译系统将在 ESP-IDF v5.0 后弃用。

软件包管理器

从零开始设置工具链，你需要安装 MacPorts 或 homebrew 包管理器。或者，你也可以直接下载预编译的工具链。

MacPorts 需要安装完整的 XCode 软件，而 homebrew 只需要安装 XCode 命令行工具即可。

准备工作

- 安装 pip:

```
sudo easy_install pip
```

- 安装 pyserial:

```
sudo pip install pyserial
```

- 安装 CMake 和 Ninja 编译工具：
  - 若使用 HomeBrew，你可以运行:

```
brew install cmake ninja
```

  - 若使用 MacPorts，你可以运行:

```
sudo port install cmake ninja
```

从源代码编译工具链

- 相关安装：
  - 对于 MacPorts:

```
sudo port install gsed gawk binutils gperf grep gettext wget libtool autoconf␣
↪automake make
```

  - 对于 homebrew:

```
brew install gnu-sed gawk binutils gperftools gettext wget help2man libtool␣
↪autoconf automake make
```

创建一个文件系统镜像（区分大小写）：

```
hdiutil create ~/esp/crosstool.dmg -volname "ctng" -size 10g -fs "Case-sensitive HFS+"
```

挂载:

```
hdiutil mount ~/esp/crosstool.dmg
```

创建指向你工作目录的符号链接:

```
mkdir -p ~/esp
ln -s /Volumes/ctng ~/esp/ctng-volume
```

前往新创建的目录：：

```
cd ~/esp/ctng-volume
```

下载 crosstool-NG，并开始编译：

```
git clone -b xtensa-1.22.x https://github.com/espressif/crosstool-NG.git
cd crosstool-NG
./bootstrap && ./configure --enable-local && make install
```

编译工具链：：

```
./ct-ng xtensa-esp32-elf
./ct-ng build
chmod -R u+w builds/xtensa-esp32-elf
```

编译后的工具链将保存在 ~/esp/ctng-volume/crosstool-NG/builds/xtensa-esp32-elf。根据*Mac OS 下设置环境变量的标准方法* 中的介绍，将工具链添加到 PATH 中。

后续步骤

继续设置开发环境，请前往获取 *ESP-IDF* 章节。

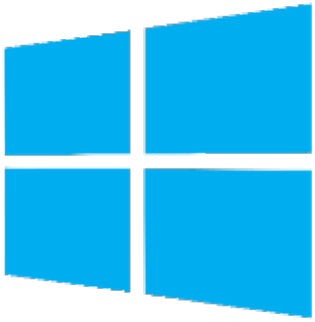		
Windows	Linux	Mac OS

注解: 我们使用用户名主目录下的 `esp` 子目录（Linux 和 MacOS 为 `~/esp`，Windows 为 `%userprofile%\esp`）来进行一切有关 ESP-IDF 的安装操作。你也可以使用其他目录，但是需要注意调整相应的指令。

你可以安装预编译的工具链或者自定义你的环境，这完全取决于个人经验和偏好。如果你要自定义环境，请参考工具链自定义设置 *(CMake)*。

工具链设置完成后，继续阅读获取 *ESP-IDF* 一节。

2.5 获取 ESP-IDF

工具链（包括用于编译和构建应用程序的程序）安装完成后，你还需要 ESP32 相关的 API/库。你可在乐鑫提供的 ESP-IDF 仓库 中获取 API/库本地副本。打开终端，切换到你要存放 ESP-IDF 的目录，然后使用 `git clone` 命令克隆远程仓库。

2.5.1 Linux 和 MacOS

获取本地副本：打开终端，切换到你要存放 ESP-IDF 的工作目录，使用 `git clone` 命令克隆远程仓库:

```
cd ~/esp
git clone -b release/v3.3 --recursive https://github.com/espressif/esp-idf.git
```

ESP-IDF 将会被下载到 `~/esp/esp-idf` 目录下。

有关在给定情况下使用哪个 ESP-IDF 版本的信息，请参阅*ESP-IDF Versions* 。

2.5.2 Windows Command Prompt

```
mkdir %userprofile%\esp
cd %userprofile%\esp
git clone -b release/v3.3 --recursive https://github.com/espressif/esp-idf.git
```

ESP-IDF 将会被下载到用户的 esp\esp-idf 目录下。

有关在给定情况下使用哪个 ESP-IDF 版本的信息，请参阅*ESP-IDF Versions* 。

注解： git clone 命令的 -b release/v3.3 选项告诉 git 从 ESP-IDF 仓库中克隆与此版本的文档对应的分支。

注解： GitHub 中”下载 zip 文档”的功能不适用于 ESP-IDF，所以需要使用 git clone 命令。作为备份，可以在没有安装 Git 的环境中下载 Stable version 的 zip 归档文件。

注解： 注意这里有个 --recursive 选项。如果你克隆 ESP-IDF 时没有带这个选项，你还需要运行额外的命令来获取子模块:

```
cd esp-idf
git submodule update --init
```

2.6 设置环境变量

ESP-IDF 的正常运行需要设置两个环境变量:

- IDF_PATH 应设置为 ESP-IDF 根目录的路径。
- PATH 应包括同一 IDF_PATH 目录下的 tools 目录路径。

你需在你的电脑中设置这两个变量，否则工程将不能编译。

你可以在每次 PC 重启时手动设置，你也可以在用户配置中进行永久设置，具体请参照*在用户配置文件中添加 IDF_PATH 和 idf.py PATH (CMake)* 小节中的*Windows*，*Linux 和 MacOS* 相关指导进行操作。

2.7 创建一个工程

现在可以开始创建 ESP32 应用程序了。为了快速开始，我们这里以 IDF 的 examples 目录下的 get-started/hello_world 工程为例进行说明。

将 get-started/hello_world 拷贝到 ~/esp 目录:

2.7.1 Linux 和 MacOS

```
cd ~/esp
cp -r $IDF_PATH/examples/get-started/hello_world .
```

2.7.2 Windows Command Prompt

```
cd %userprofile%\esp
xcopy /e /i %IDF_PATH%\examples\get-started\hello_world hello_world
```

ESP-IDF 的 examples 目录下有一系列示例工程，都可以按照上面的方法进行创建。

你也可以在原有位置创建示例，无需事先拷贝这些示例。

重要: esp-idf 构建系统不支持在路径中存在空格。

2.8 连接

还有几个步骤就完成了。在继续后续操作前，先将 ESP32 开发板连接到 PC，然后检查串口号，看看它能否正常通信。如果你不知道如何操作，请查看*与 ESP32 创建串口连接 (CMake)* 中的相关指导。请注意一下端口号，我们在下一步中会用到。

2.9 配置

进入 hello_world 应用程序副本目录，运行 menuconfig 工程配置工具:

2.9.1 Linux 和 MacOS

```
cd ~/esp/hello_world
idf.py menuconfig
```

2.9.2 Windows Command Prompt

```
cd %userprofile%\esp\hello_world
idf.py menuconfig
```

注解: 如果你收到未发现 `idf.py` 的报错信息，查看是否如上设置环境变量 所述将 `tools` 目录添加到你的路径中。如果 `tools` 目录中没有 `idf.py`，查看获取 *ESP-IDF* 中 CMake 预览所处的分支是否正确。

注解: 对于 Windows 用户而言，Python 2.7 安装器会尝试配置 Windows，关联扩展名为 `.py` 的 Python 2 文件。如果单独安装的程序（如 Visual Studio Python 工具）关联到其他 Python 版本，`idf.py` 可能无法运行（而仅是在 Visual Studio 中打开此文件）。你可以每次运行 `C:\Python27\python idf.py` 或更改 Windows 中有关 ".py" 文件的关联设置。

注解: 对于 Linux 用户而言，如果默认为 Python 3.x 版本，你需要运行 `python2 idf.py`。

如果之前的步骤都正确，则会显示下面的菜单：

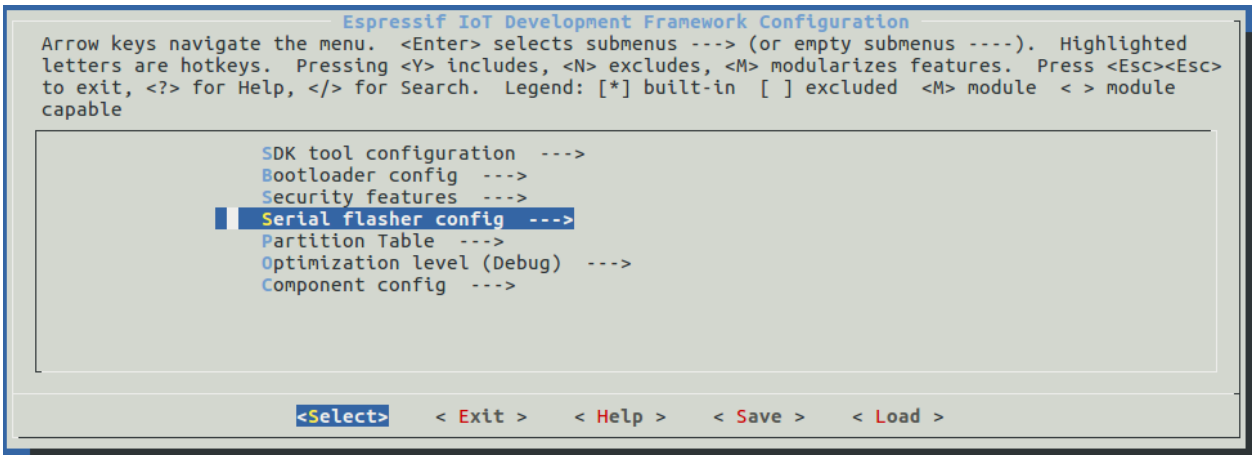

图 16: 工程配置 - 主窗口

下面是一些使用 `menuconfig` 的小技巧：

- 使用 up & down 组合键在菜单中上下移动
- 使用 Enter 键进入一个子菜单，Escape 键进入上一层菜单或退出整个菜单
- 输入 `?` 查看帮助信息，Enter 键退出帮助屏幕
- 使用空格键或 `Y` 和 `N` 键来使能 (Yes) 和禁止 (No) 带有复选框 "`[*]`" 的配置项

- 当光标在某个配置项上面高亮时，输入 ? 可以直接查看该项的帮助信息
- 输入 / 搜索配置项

注意： 如果 ESP32-DevKitC 板载的是 ESP32-SOLO-1 模组，请务必在烧写示例程序之前在 menuconfig 中使能单核模式（*CONFIG_FREERTOS_UNICORE*）。

2.10 创建一个工程

现在可以编译工程了，执行指令:

```
idf.py build
```

这条命令会编译应用程序和所有的 ESP-IDF 组件，生成 bootloader、区分表和应用程序 bin 文件。

```
$ idf.py build
Running cmake in directory /path/to/hello_world/build
Executing "cmake -G Ninja --warn-uninitialized /path/to/hello_world"...
Warn about uninitialized values.
-- Found Git: /usr/bin/git (found version "2.17.0")
-- Building empty aws_iot component due to configuration
-- Component names: ...
-- Component paths: ...

... (more lines of build system output)

[527/527] Generating hello-world.bin
esptool.py v2.3.1

Project build complete. To flash, run this command:
../../../components/esptool_py/esptool/esptool.py -p (PORT) -b 921600 write_flash --
↪flash_mode dio --flash_size detect --flash_freq 40m 0x10000 build/hello-world.bin ␣
↪build 0x1000 build/bootloader/bootloader.bin 0x8000 build/partition_table/partition-
↪table.bin
or run 'idf.py -p PORT flash'
```

如果没有任何报错，将会生成 bin 文件，至此编译完成。

2.11 烧录到设备

现在可以将应用程序烧录到 ESP32 板子上，执行指令:

```
idf.py -p PORT flash
```

将端口改为 ESP32 板子的串口名称。Windows 平台的端口名称类似 `COM1`，而 MacOS 则以 `/dev/cu.` 开头，Linux 则是 `/dev/tty`。详情请参照*与 ESP32 创建串口连接 (CMake)*。

该步骤旨在将此前编译的 bin 文件烧录到 ESP32 板子上。

注解: 无需在 `idf.py flash` 之前运行 `idf.py build`，烧录这一步会按照烧录前编写的要求（如有）自动编写工程。

```
Running esptool.py in directory [...]/esp/hello_world
Executing "python [...]/esp-idf/components/esptool_py/esptool/esptool.py -b 460800 write_
↪flash @flash_project_args"...
esptool.py -b 460800 write_flash --flash_mode dio --flash_size detect --flash_freq 40m␣
↪0x1000 bootloader/bootloader.bin 0x8000 partition_table/partition-table.bin 0x10000␣
↪hello-world.bin
esptool.py v2.3.1
Connecting....
Detecting chip type... ESP32
Chip is ESP32D0WDQ6 (revision 1)
Features: WiFi, BT, Dual Core
Uploading stub...
Running stub...
Stub running...
Changing baud rate to 460800
Changed.
Configuring flash size...
Auto-detected Flash size: 4MB
Flash params set to 0x0220
Compressed 22992 bytes to 13019...
Wrote 22992 bytes (13019 compressed) at 0x00001000 in 0.3 seconds (effective 558.9 kbit/
↪s)...
Hash of data verified.
Compressed 3072 bytes to 82...
Wrote 3072 bytes (82 compressed) at 0x00008000 in 0.0 seconds (effective 5789.3 kbit/s)..
↪.
```

(下页继续)

(续上页)

```
Hash of data verified.
Compressed 136672 bytes to 67544...
Wrote 136672 bytes (67544 compressed) at 0x00010000 in 1.9 seconds (effective 567.5 kbit/
↪s)...
Hash of data verified.

Leaving...
Hard resetting via RTS pin...
```

如果没有任何问题，在烧录的最后阶段，板子将会复位，应用程序“hello_world”开始运行。

2.12 监视器

如果要查看“hello_world”程序是否真的在运行，输入命令 `idf.py -p PORT monitor`。这个命令会启动*IDF Monitor* 程序:

```
$ idf.py -p /dev/ttyUSB0 monitor
Running idf_monitor in directory [...]/esp/hello_world/build
Executing "python [...]/esp-idf/tools/idf_monitor.py -b 115200 [...]/esp/hello_world/
↪build/hello-world.elf"...
--- idf_monitor on /dev/ttyUSB0 115200 ---
--- Quit: Ctrl+] | Menu: Ctrl+T | Help: Ctrl+T followed by Ctrl+H ---
ets Jun  8 2016 00:22:57

rst:0x1 (POWERON_RESET),boot:0x13 (SPI_FAST_FLASH_BOOT)
ets Jun  8 2016 00:22:57
...
```

在启动消息和诊断消息后，你就能看到“Hello world!”程序所打印的消息:

```
...
Hello world!
Restarting in 10 seconds...
I (211) cpu_start: Starting scheduler on APP CPU.
Restarting in 9 seconds...
Restarting in 8 seconds...
Restarting in 7 seconds...
```

要退出监视器，请使用快捷键 `Ctrl+]`。

注解: 如果串口打印的不是上面显示的消息而是类似下面的乱码:

```
e  )(Xn@ y.! （ PW+） Hn9a /9 ! t5  P ~ k  e ea 5 jA
~zY  Y(1 ,1   e  )(Xn@ y.!Dr zY( jpi | +z5Ymvp
```

或者监视器程序启动失败，那么可能你的开发板用的是 26 MHz 晶振，而大多数开发板用的是 40 MHz 晶振，并且 ESP-IDF 默认的也是这一数值。请退出监视器，回到*menuconfig*，将*CONFIG_ESP32_XTAL_FREQ_SEL* 改为 26 MHz，然后再次*编写和烧录* 程序。请在 `idf.py menuconfig` 的 Component config –> ESP32-specific –> Main XTAL frequency 中配置。

注解: 你可以将编写、烧录和监视整合到一步当中，如下所示:

```
idf.py -p PORT flash monitor
```

有关监视器使用的快捷键和其他详情，请参阅*IDF Monitor*。

有关 `idf.py` 的全部命令和选项，请参阅*idf.py*。

你已完成 ESP32 的入门!

现在你可以尝试其他的示例工程 examples，或者直接开发自己的应用程序。

2.13 更新 ESP-IDF

使用 ESP-IDF 一段时间后，您可能想通过升级来获取新的功能或者修复 bug，最简单的升级方式就是删除已有的 `esp-idf` 文件夹然后重新克隆一个，即重复*获取 ESP-IDF* 里的操作。

然后*添加 IDF 到工作路径*，这样工具链脚本就能够知道这一版本的 ESP-IDF 的具体位置。

另外一种方法是只更新有改动的部分。*更新步骤取决于现在用的 ESP-IDF 版本*。

2.14 相关文档

2.14.1 在用户配置文件中添加 IDF_PATH 和 idf.py PATH (CMake)

[英文]

注解: 本文档将介绍如何使用 CMake 编译系统。目前，CMake 编译系统仍处于预览发布阶段，如您在使用中遇到任何问题，请前往 ESP-IDF 提交 Issues。

未来，CMake 编译系统将在 ESP-IDF v4.0 发布后过渡为默认编译系统，现行基于 GNU Make 的编译系统将在 ESP-IDF v5.0 后弃用。

使用基于 CMake 的构建系统和 idf.py 工具，用户需修改两处系统环境变量：

- `IDF_PATH` 需设置为含有 ESP-IDF 目录的路径
- 系统 `PATH` 变量需包括含有 `idf.py` 工具（属于 ESP-IDF 一部分）的目录

为确保系统重启后仍保存之前的变量设置，请参照以下说明将变量设置添加到用户配置文件中。

注解： 使用 IDE 工具的情况下，你可以选择在 IDE 项目环境中设置环境变量，而不使用如下命令行。

注解： 如果你从未用过 `idf.py` 命令行工具，而是直接运行 cmake 或通过 IDE 工具运行 cmake，则无需设置 `PATH` 变量，只需设置 `IDF_PATH` 变量。不过，你也可以两个都设置。

注解： 如果你只用过 `idf.py` 命令行工具，从未直接运行 cmake 或通过 IDE 工具运行 cmake，则无需设置 `IDF_PATH` 变量。`idf.py` 会搜索自身包含的目录，如果没有发现 `IDF_PATH`，则会自行进行有关设置。

Windows 操作系统

在 Windows 10 操作系统下设置环境变量，用户应在开始菜单下搜索 “Edit Environment Variables”。

在较早版本的 Windows 操作系统下设置环境变量，用户应打开系统控制面板，选择 “高级”，找到环境变量按钮。

你可以为本台电脑上的 “所有用户” 或 “当前用户” 设置环境变量，这取决于其他用户是否也需要使用 ESP-IDF。

- 点击 `New...``（新建...）添加名为 ``IDF_PATH` 的新系统变量，具体设置为包含 ESP-IDF 的目录，例如，`C:\Users\user-name\esp\esp-idf`。
- 找到 `Path` 环境变量，双击进行编辑。在末尾添加 `;%IDF_PATH%\tools`，这样你就可以通过 Windows 命令窗口运行 `idf.py` 等其他工具了。

如果你在安装 ESP32 开发的软件时，从设置环境变量 小节跳到了这里，请返回创建一个工程 小节开始阅读。

Linux 和 MacOS 操作系统

要设置 `IDF_PATH`，并在 PATH 中添加 `idf.py`，请将以下两行代码增加至你的 `~/.profile` 文件中:

```
export IDF_PATH=~/esp/esp-idf
export PATH="$IDF_PATH/tools:$PATH"
```

注解： ~/.profile 表示在你的电脑用户主目录中，后缀为 .profile 的文件。(~ 为 shell 中的缩写)。

请退出，并重新登录使更改生效。

注解： 并非所有 shell 都使用 .profile，但是如果同时存在 /bin/bash 和 .bash_profile，请更新此配置文件。如果存在 zsh，更新 .zprofile。其他 shell 可能使用其他配置文件（详询有关 shell 的文档）。

运行以下命令来检查 IDF_PATH 设置是否正确:

```
printenv IDF_PATH
```

此处应打印出此前在 ~/.profile 文件中输入（或手动设置）的路径。

为确认 idf.py 目前是否在 PATH 中，你可以运行以下命令:

```
which idf.py
```

这里，应打印出类似 ${IDF_PATH}/tools/idf.py 的路径。

如果你不想进行有关 IDF_PATH 或 PATH 的修改设置，你可以在每次重启或退出后在终端中手动输入:

```
export IDF_PATH=~/esp/esp-idf
export PATH="$IDF_PATH/tools:$PATH"
```

如果你在安装 ESP32 开发的软件时，从设置环境变量 小节跳到了这里，请返回创建一个工程 小节开始阅读。

2.14.2 与 ESP32 创建串口连接 (CMake)

[English]

本章节主要介绍如何创建 ESP32 和 PC 之间的串口连接。

连接 ESP32 和 PC

用 USB 线将 ESP32 开发板连接到 PC。如果设备驱动程序没有自动安装，请先确认 ESP32 开发板上的 USB 转串口芯片（或外部转串口适配器）型号，然后在网上搜索驱动程序，并进行手动安装。

以下是乐鑫 ESP32 开发板驱动程序的链接：

- ESP32-PICO-KIT 和 ESP32-DevKitC - CP210x USB 至 UART 桥 VCP 驱动程序
- ESP32-WROVER-KIT 和 ESP32 演示板 - FTDI 虚拟 COM 端口驱动程序

以上驱动仅用于参考。当你将上述 ESP32 开发板与 PC 连接时，对应驱动程序应该已经被打包在操作系统中，并已经自动安装了。

在 Windows 上查看端口

检查 Windows 设备管理器中的 COM 端口列表。断开 ESP32 与 PC 的连接，然后重新连接，查看哪个端口从列表中消失，然后再次出现。

以下为 ESP32 DevKitC 和 ESP32 WROVER KIT 串口：

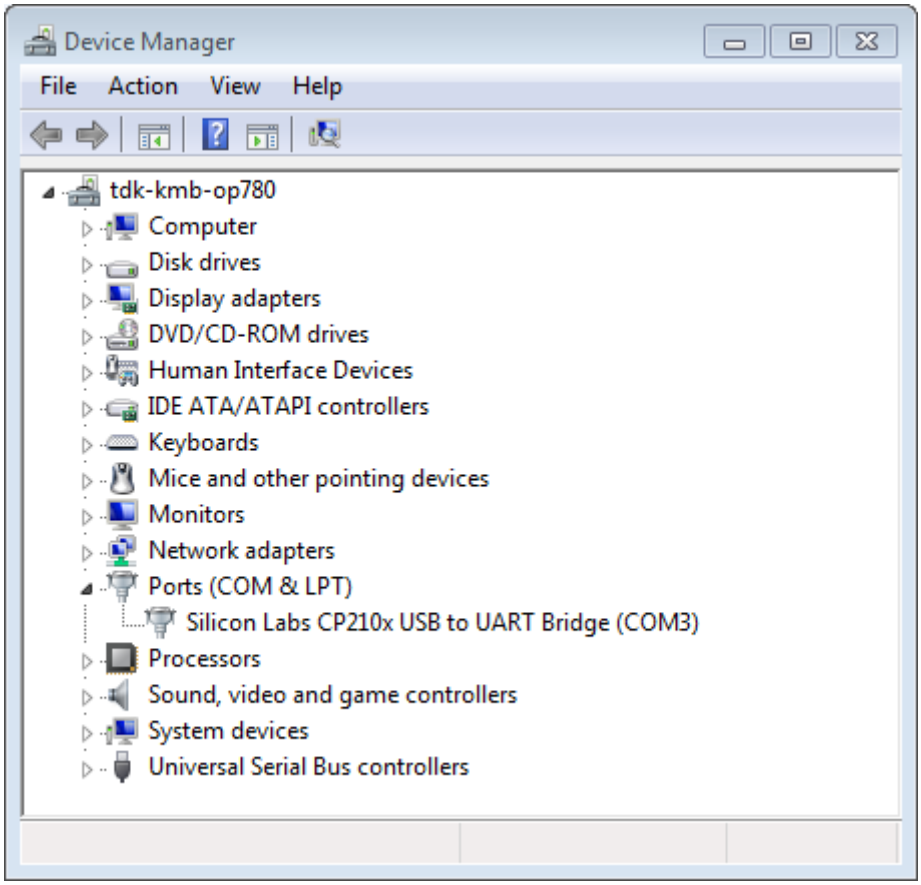

图 17: 设备管理器中 ESP32-DevKitC 的 USB 至 UART 桥

在 Linux 和 MacOS 上查看端口

查看 ESP32 开发板（或外部转串口适配器）的串口设备名称，请运行两次以下命令。首先，断开开发板或适配器，第一次运行命令；然后，连接开发板或适配器，第二次运行命令。其中，第二次运行命令后出现的端口即是 ESP32 对应的串口：

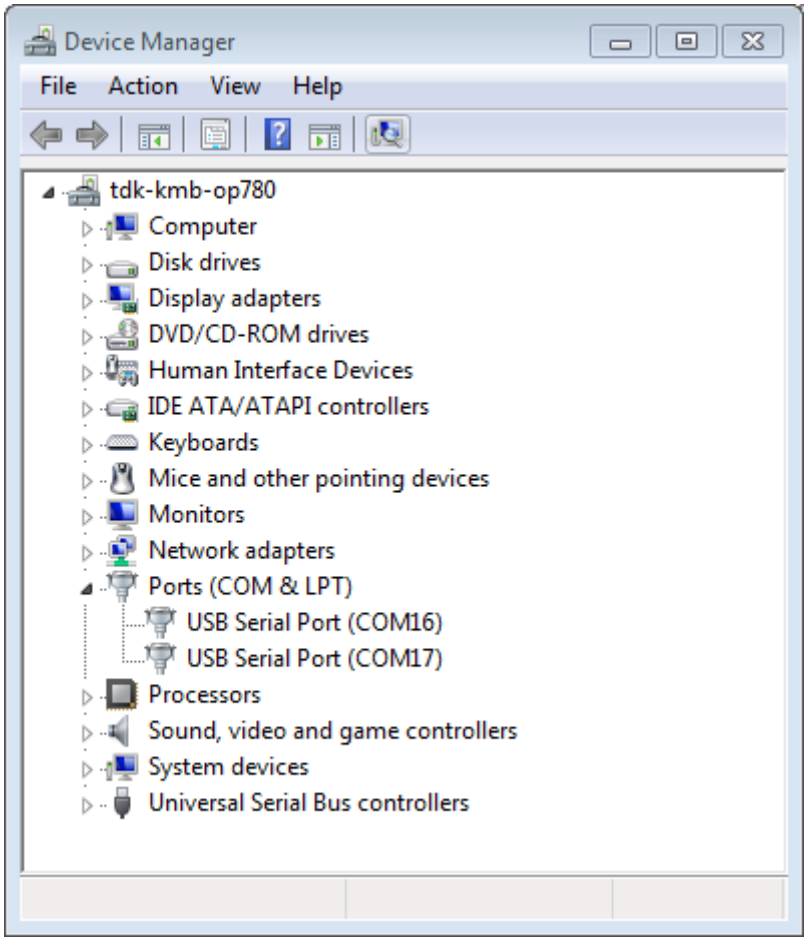

图 18: Windows 设备管理器中 ESP-WROVER-KIT 的两个 USB 串行端口

Linux

```
ls /dev/tty*
```

MacOS

```
ls /dev/cu.*
```

在 Linux 中添加用户到 dialout

当前登录用户应当可以通过 USB 对串口进行读写操作。在多数 Linux 版本中，你都可以通过以下命令，将用户添加到 dialout 组，来获许读写权限:

```
sudo usermod -a -G dialout $USER
```

在 Arch Linux 中，需要通过以下命令将用户添加到 uucp 组中:

```
sudo usermod -a -G uucp $USER
```

请重新登录，确保串口读写权限可以生效。

确认串口连接

现在，请使用串口终端程序，验证串口连接是否可用。在本示例中，我们将使用 PuTTY SSH Client，PuTTY SSH Client 既可用于 Windows 也可用于 Linux。你也可以使用其他串口程序并设置如下的通信参数。

运行终端，配置串口：波特率 = 115200，数据位 = 8，停止位 = 1，奇偶校验 = N。以下截屏分别展示了在 Windows 和 Linux 中配置串口和上述通信参数（如 115200-8-1-N）。注意，这里一定要选择在上述步骤中确认的串口进行配置。

然后，请检查 ESP32 是否有打印日志。如有，请在终端打开串口进行查看。这里，日志内容取决于加载到 ESP32 的应用程序，下图即为一个示例。

```
ets Jun  8 2016 00:22:57

rst:0x5 (DEEPSLEEP_RESET),boot:0x13 (SPI_FAST_FLASH_BOOT)
ets Jun  8 2016 00:22:57

rst:0x7 (TG0WDT_SYS_RESET),boot:0x13 (SPI_FAST_FLASH_BOOT)
configsip: 0, SPIWP:0x00
clk_drv:0x00,q_drv:0x00,d_drv:0x00,cs0_drv:0x00,hd_drv:0x00,wp_drv:0x00
mode:DIO, clock div:2
load:0x3fff0008,len:8
```

(下页继续)

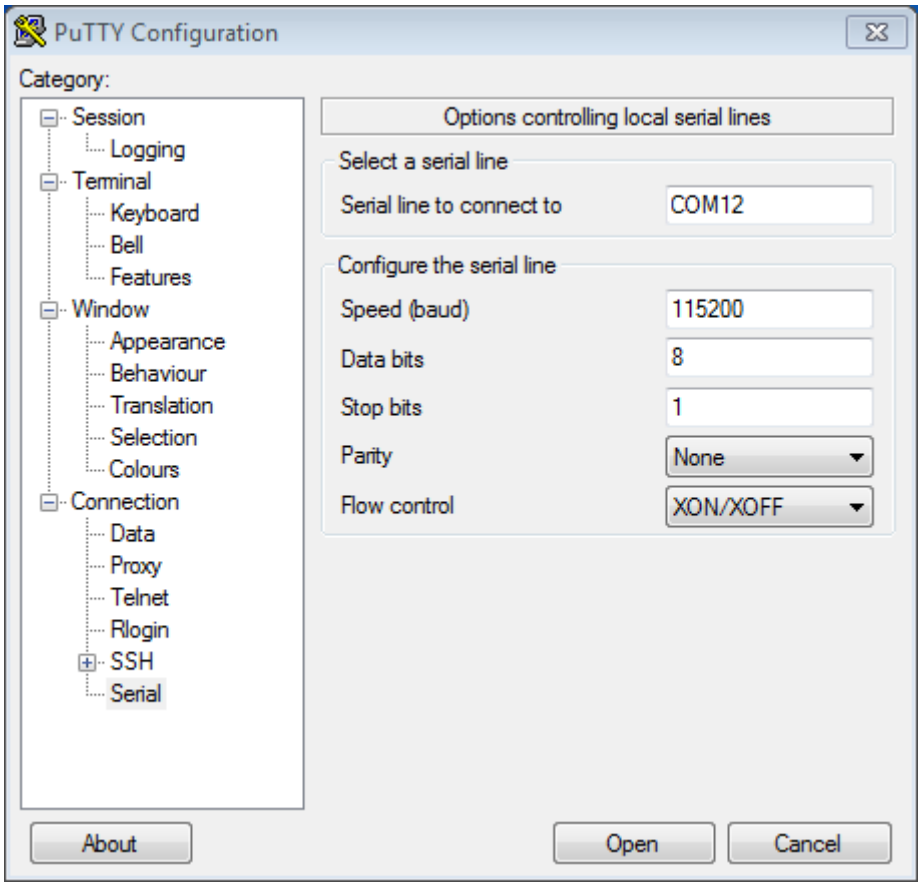

图 19: 在 Windows 操作系统中使用 PuTTY 设置串口通信参数

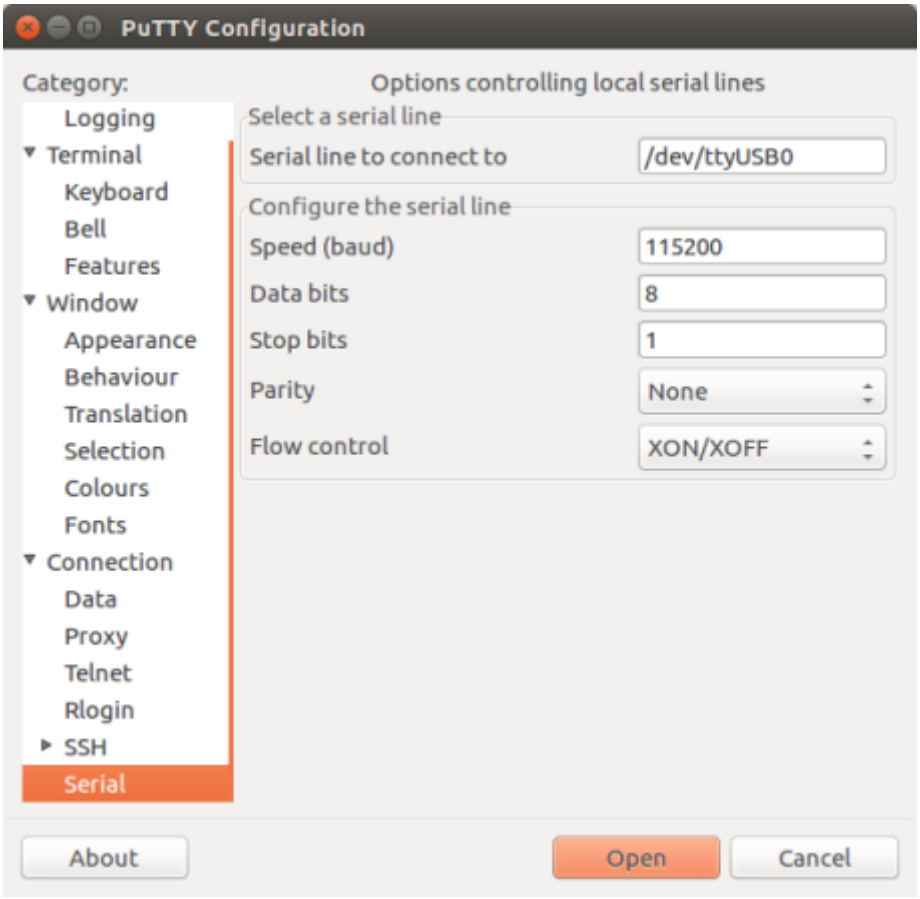

图 20: 在 Linux 操作系统中使用 PuTTY 设置串口通信参数

(续上页)

```
load:0x3fff0010,len:3464
load:0x40078000,len:7828
load:0x40080000,len:252
entry 0x40080034
I (44) boot: ESP-IDF v2.0-rc1-401-gf9fba35 2nd stage bootloader
I (45) boot: compile time 18:48:10

...
```

如果打印出的日志是可读的（而不是乱码），则表示串口连接正常。此时，你可以继续进行安装，并最终将应用程序上载到 ESP32。

注解： 在某些串口接线方式下，在 ESP32 启动并开始打印串口日志前，需要在终端程序中禁用串口 RTS & DTR 引脚。该问题仅存在于将 RTS & DTR 引脚直接连接到 EN & GPIO0 引脚上的情况，绝大多数开发板（包括乐鑫所有的开发板）都没有这个问题。更多详细信息，参见 esptool documentation。

注解： 请在验证完串口通信正常后，关闭串口终端。下一步，我们将使用另一个应用程序将新的固件上传到 ESP32。此时，如果串口被占用则无法成功。

如你在安装用于 ESP32 开发的软件时，从连接 小节跳转到了这里，请返回到配置 小节继续阅读。

2.14.3 Eclipse IDE 创建和烧录指南 (CMake)

[English]

注解： 本文档将介绍如何使用 CMake 编译系统。目前，CMake 编译系统仍处于预览发布阶段，如您在使用中遇到任何问题，请前往 ESP-IDF 提交 Issues。

未来，CMake 编译系统将在 ESP-IDF v4.0 发布后过渡为默认编译系统，现行基于 GNU Make 的编译系统将在 ESP-IDF v5.0 后弃用。

有关基于 CMake-based 构建系统和 Eclipse CDT，进行 Eclipse 设置的相关文档即将发布。

2.14.4 IDF Monitor (CMake)

The idf_monitor tool is a Python program which runs when the `idf.py monitor` target is invoked in IDF.

It is mainly a serial terminal program which relays serial data to and from the target device's serial port, but it has some other IDF-specific features.

Interacting With IDF Monitor

- `Ctrl-]` will exit the monitor.
- `Ctrl-T Ctrl-H` will display a help menu with all other keyboard shortcuts.
- Any other key apart from `Ctrl-]` and `Ctrl-T` is sent through the serial port.

Automatically Decoding Addresses

Any time esp-idf prints a hexadecimal code address of the form `0x4_______`, IDF Monitor will use addr2line to look up the source code location and function name.

When an esp-idf app crashes and panics a register dump and backtrace such as this is produced:

```
Guru Meditation Error of type StoreProhibited occurred on core  0. Exception was␣
↪unhandled.
Register dump:
PC      : 0x400f360d  PS      : 0x00060330  A0      : 0x800dbf56  A1      : 0x3ffb7e00
A2      : 0x3ffb136c  A3      : 0x00000005  A4      : 0x00000000  A5      : 0x00000000
A6      : 0x00000000  A7      : 0x00000080  A8      : 0x00000000  A9      : 0x3ffb7dd0
A10     : 0x00000003  A11     : 0x00060f23  A12     : 0x00060f20  A13     : 0x3ffba6d0
A14     : 0x00000047  A15     : 0x0000000f  SAR     : 0x00000019  EXCCAUSE: 0x0000001d
EXCVADDR: 0x00000000  LBEG    : 0x4000c46c  LEND    : 0x4000c477  LCOUNT  : 0x00000000

Backtrace: 0x400f360d:0x3ffb7e00 0x400dbf56:0x3ffb7e20 0x400dbf5e:0x3ffb7e40␣
↪0x400dbf82:0x3ffb7e60 0x400d071d:0x3ffb7e90
```

IDF Monitor will augment the dump:

```
Guru Meditation Error of type StoreProhibited occurred on core  0. Exception was␣
↪unhandled.
Register dump:
PC      : 0x400f360d  PS      : 0x00060330  A0      : 0x800dbf56  A1      : 0x3ffb7e00
0x400f360d: do_something_to_crash at /home/gus/esp/32/idf/examples/get-started/hello_
↪world/main/./hello_world_main.c:57
(inlined by) inner_dont_crash at /home/gus/esp/32/idf/examples/get-started/hello_world/
↪main/./hello_world_main.c:52
A2      : 0x3ffb136c  A3      : 0x00000005  A4      : 0x00000000  A5      : 0x00000000
A6      : 0x00000000  A7      : 0x00000080  A8      : 0x00000000  A9      : 0x3ffb7dd0
```

(下页继续)

(续上页)

```
A10     : 0x00000003  A11     : 0x00060f23  A12     : 0x00060f20  A13     : 0x3ffba6d0
A14     : 0x00000047  A15     : 0x0000000f  SAR     : 0x00000019  EXCCAUSE: 0x0000001d
EXCVADDR: 0x00000000  LBEG    : 0x4000c46c  LEND    : 0x4000c477  LCOUNT  : 0x00000000

Backtrace: 0x400f360d:0x3ffb7e00 0x400dbf56:0x3ffb7e20 0x400dbf5e:0x3ffb7e40␣
↪0x400dbf82:0x3ffb7e60 0x400d071d:0x3ffb7e90
0x400f360d: do_something_to_crash at /home/gus/esp/32/idf/examples/get-started/hello_
↪world/main/./hello_world_main.c:57
(inlined by) inner_dont_crash at /home/gus/esp/32/idf/examples/get-started/hello_world/
↪main/./hello_world_main.c:52
0x400dbf56: still_dont_crash at /home/gus/esp/32/idf/examples/get-started/hello_world/
↪main/./hello_world_main.c:47
0x400dbf5e: dont_crash at /home/gus/esp/32/idf/examples/get-started/hello_world/main/./
↪hello_world_main.c:42
0x400dbf82: app_main at /home/gus/esp/32/idf/examples/get-started/hello_world/main/./
↪hello_world_main.c:33
0x400d071d: main_task at /home/gus/esp/32/idf/components/esp32/./cpu_start.c:254
```

Behind the scenes, the command IDF Monitor runs to decode each address is:

```
xtensa-esp32-elf-addr2line -pfiaC -e build/PROJECT.elf ADDRESS
```

Launch GDB for GDBStub

By default, if an esp-idf app crashes then the panic handler prints registers and a stack dump as shown above, and then resets.

Optionally, the panic handler can be configured to run a serial "gdb stub" which can communicate with a gdb debugger program and allow memory to be read, variables and stack frames examined, etc. This is not as versatile as JTAG debugging, but no special hardware is required.

To enable the gdbstub, run `idf.py menuconfig` and set *CONFIG_ESP32_PANIC* option to `Invoke GDBStub`.

If this option is enabled and IDF Monitor sees the gdb stub has loaded, it will automatically pause serial monitoring and run GDB with the correct arguments. After GDB exits, the board will be reset via the RTS serial line (if this is connected.)

Behind the scenes, the command IDF Monitor runs is:

```
xtensa-esp32-elf-gdb -ex "set serial baud BAUD" -ex "target remote PORT" -ex interrupt␣
↪build/PROJECT.elf
```

Quick Compile and Flash

The keyboard shortcut `Ctrl-T Ctrl-F` will pause idf_monitor, run the `idf.py flash` target, then resume idf_monitor. Any changed source files will be recompiled before re-flashing.

The keyboard shortcut `Ctrl-T Ctrl-A` will pause idf-monitor, run the `idf.py app-flash` target, then resume idf_monitor. This is similar to `idf.py flash`, but only the main app is compiled and reflashed.

Quick Reset

The keyboard shortcut `Ctrl-T Ctrl-R` will reset the target board via the RTS line (if it is connected.)

Pause the Application

The keyboard shortcut `Ctrl-T Ctrl-P` will reset the target into bootloader, so that the board will run nothing. This is useful when you want to wait for another device to startup. Then shortcut `Ctrl-T Ctrl-R` can be used to restart the application.

Toggle Output Display

Sometimes you may want to stop new output printed to screen, to see the log before. The keyboard shortcut `Ctrl-T Ctrl-Y` will toggle the display (discard all serial data when the display is off) so that you can stop to see the log, and revert again quickly without quitting the monitor.

Simple Monitor

Earlier versions of ESP-IDF used the pySerial command line program miniterm as a serial console program.

This program can still be run, via `make simple_monitor`.

IDF Monitor is based on miniterm and shares the same basic keyboard shortcuts.

注解: This target only works in the GNU Make based build system, not the CMake-based build system preview.

Known Issues with IDF Monitor

Issues Observed on Windows

- If you are using the supported Windows environment and receive the error "winpty: command not found" then run `pacman -S winpty` to fix.

- Arrow keys and some other special keys in gdb don’ t work, due to Windows Console limitations.
- Occasionally when “make” exits, it may stall for up to 30 seconds before idf_monitor resumes.
- Occasionally when “gdb” is run, it may stall for a short time before it begins communicating with the gdbstub.

2.14.5 工具链自定义设置 (CMake)

[英文]

除了从乐鑫官网（请见设置工具链）下载二进制工具链外，你还可以自行编制工具链。

如果没有特别需求，建议直接使用我们提供的预编制二进制工具链。不过，你也可能也会由于以下原因，编制你自己的工具链：

- 需要定制工具链编制配置
- 使用其他 GCC 版本（如 4.8.5）
- 需要破解 gcc、newlib 或 libstdc++
- 有相关兴趣或时间充裕
- 不信任从网站下载的 bin 文件

无论如何，如果你希望自行编制工具链，请查看以下文档：

CHAPTER 3

API Reference

3.1 Bluetooth API

3.1.1 Controller && VHCI

Overview

Instructions

Application Example

Check bluetooth folder in ESP-IDF examples, which contains the following application:

- This is a BLE advertising demo with virtual HCI interface. Send Reset/ADV_PARAM/ADV_DATA/ADV_ENABLE HCI command for BLE advertising - bluetooth/ble_adv.

API Reference

Header File

- bt/include/esp_bt.h

Functions

esp_err_t **esp_ble_tx_power_set**(*esp_ble_power_type_t power_type*, *esp_power_level_t power_level*)

Set BLE TX power Connection Tx power should only be set after connection created.

Return ESP_OK - success, other - failed

Parameters

- `power_type`: : The type of which tx power, could set Advertising/Connection/Default and etc
- `power_level`: Power level(index) corresponding to absolute value(dbm)

esp_power_level_t **esp_ble_tx_power_get**(*esp_ble_power_type_t power_type*)

Get BLE TX power Connection Tx power should only be get after connection created.

Return >= 0 - Power level, < 0 - Invalid

Parameters

- `power_type`: : The type of which tx power, could set Advertising/Connection/Default and etc

esp_err_t **esp_bredr_tx_power_set**(*esp_power_level_t min_power_level*, *esp_power_level_t max_power_level*)

Set BR/EDR TX power BR/EDR power control will use the power in range of minimum value and maximum value. The power level will effect the global BR/EDR TX power, such inquire, page, connection and so on. Please call the function after esp_bt_controller_enable and before any function which cause RF do TX. So you can call the function before doing discovery, profile init and so on. For example, if you want BR/EDR use the new TX power to do inquire, you should call this function before inquire. Another word, If call this function when BR/EDR is in inquire(ING), please do inquire again after call this function. Default minimum power level is ESP_PWR_LVL_N0, and maximum power level is ESP_PWR_LVL_P3.

Return ESP_OK - success, other - failed

Parameters

- `min_power_level`: The minimum power level
- `max_power_level`: The maximum power level

esp_err_t **esp_bredr_tx_power_get**(*esp_power_level_t *min_power_level*, *esp_power_level_t *max_power_level*)

Get BR/EDR TX power If the argument is not NULL, then store the corresponding value.

Return ESP_OK - success, other - failed

Parameters

- `min_power_level`: The minimum power level
- `max_power_level`: The maximum power level

esp_err_t **esp_bredr_sco_datapath_set**(*esp_sco_data_path_t data_path*)

set default SCO data path Should be called after controller is enabled, and before (e)SCO link is established

Return ESP_OK - success, other - failed

Parameters

- `data_path`: SCO data path

esp_err_t **esp_bt_controller_init**(*esp_bt_controller_config_t *cfg*)

Initialize BT controller to allocate task and other resource. This function should be called only once, before any other BT functions are called.

Return ESP_OK - success, other - failed

Parameters

- `cfg`: Initial configuration of BT controller. Different from previous version, there' s a mode and some connection configuration in "cfg" to configure controller work mode and allocate the resource which is needed.

esp_err_t **esp_bt_controller_deinit**(void)

De-initialize BT controller to free resource and delete task.

This function should be called only once, after any other BT functions are called. This function is not whole completed, esp_bt_controller_init cannot called after this function.

Return ESP_OK - success, other - failed

esp_err_t **esp_bt_controller_enable**(*esp_bt_mode_t mode*)

Enable BT controller. Due to a known issue, you cannot call esp_bt_controller_enable() a second time to change the controller mode dynamically. To change controller mode, call esp_bt_controller_disable() and then call esp_bt_controller_enable() with the new mode.

Return ESP_OK - success, other - failed

Parameters

- `mode`: : the mode(BLE/BT/BTDM) to enable. For compatible of API, retain this argument. This mode must be equal as the mode in "cfg" of esp_bt_controller_init().

esp_err_t **esp_bt_controller_disable**(void)

Disable BT controller.

Return ESP_OK - success, other - failed

esp_bt_controller_status_t **esp_bt_controller_get_status**(void)

Get BT controller is initialised/de-initialised/enabled/disabled.

Return status value

bool **esp_vhci_host_check_send_available**(void)

esp_vhci_host_check_send_available used for check actively if the host can send packet to controller or not.

Return true for ready to send, false means cannot send packet

void **esp_vhci_host_send_packet**(uint8_t **data*, uint16_t *len*)

esp_vhci_host_send_packet host send packet to controller

Should not call this function from within a critical section or when the scheduler is suspended.

Parameters

- `data`: the packet point
- `len`: the packet length

esp_err_t **esp_vhci_host_register_callback**(const *esp_vhci_host_callback_t *callback*)

esp_vhci_host_register_callback register the vhci reference callback struct defined by vhci_host_callback structure.

Return ESP_OK - success, ESP_FAIL - failed

Parameters

- `callback`: *esp_vhci_host_callback* type variable

esp_err_t **esp_bt_controller_mem_release**(*esp_bt_mode_t mode*)

esp_bt_controller_mem_release release the controller memory as per the mode

This function releases the BSS, data and other sections of the controller to heap. The total size is about 70k bytes.

esp_bt_controller_mem_release(mode) should be called only before esp_bt_controller_init() or after esp_bt_controller_deinit().

Note that once BT controller memory is released, the process cannot be reversed. It means you cannot use the bluetooth mode which you have released by this function.

If your firmware will later upgrade the Bluetooth controller mode (BLE -> BT Classic or disabled -> enabled) then do not call this function.

If the app calls esp_bt_controller_enable(ESP_BT_MODE_BLE) to use BLE only then it is safe to call esp_bt_controller_mem_release(ESP_BT_MODE_CLASSIC_BT) at initialization time to free unused BT Classic memory.

If the mode is ESP_BT_MODE_BTDM, then it may be useful to call API esp_bt_mem_release(ESP_BT_MODE_BTDM) instead, which internally calls esp_bt_controller_mem_release(ESP_BT_MODE_BTDM) and additionally releases the BSS and data consumed by the BT/BLE host stack to heap. For more details about usage please refer to the documentation of esp_bt_mem_release() function

Return ESP_OK - success, other - failed

Parameters

- `mode`: : the mode want to release memory

esp_err_t **esp_bt_mem_release**(*esp_bt_mode_t mode*)

esp_bt_mem_release release controller memory and BSS and data section of the BT/BLE host stack as per the mode

This function first releases controller memory by internally calling esp_bt_controller_mem_release(). Additionally, if the mode is set to ESP_BT_MODE_BTDM, it also releases the BSS and data consumed by the BT/BLE host stack to heap

Note that once BT memory is released, the process cannot be reversed. It means you cannot use the bluetooth mode which you have released by this function.

If your firmware will later upgrade the Bluetooth controller mode (BLE -> BT Classic or disabled -> enabled) then do not call this function.

If you never intend to use bluetooth in a current boot-up cycle, you can call esp_bt_mem_release(ESP_BT_MODE_BTDM) before esp_bt_controller_init or after esp_bt_controller_deinit.

For example, if a user only uses bluetooth for setting the WiFi configuration, and does not use bluetooth in the rest of the product operation" . In such cases, after receiving the WiFi configuration, you can disable/deinit bluetooth and release its memory. Below is the sequence of APIs to be called for such scenarios:

```
esp_bluedroid_disable();
esp_bluedroid_deinit();
esp_bt_controller_disable();
esp_bt_controller_deinit();
esp_bt_mem_release(ESP_BT_MODE_BTDM);
```

Return ESP_OK - success, other - failed

Parameters

- `mode`: : the mode whose memory is to be released

esp_err_t **esp_bt_sleep_enable**(void)

enable bluetooth to enter modem sleep

Note that this function shall not be invoked before esp_bt_controller_enable()

There are currently two options for bluetooth modem sleep, one is ORIG mode, and another is EVED Mode. EVED Mode is intended for BLE only.

For ORIG mode: Bluetooth modem sleep is enabled in controller start up by default if CONFIG_BTDM_CONTROLLER_MODEM_SLEEP is set and "ORIG mode" is selected. In ORIG modem sleep mode, bluetooth controller will switch off some components and pause to work every now and then, if there is no event to process; and wakeup according to the scheduled interval and resume the work. It can also wakeup earlier upon external request using function "esp_bt_controller_wakeup_request" .

Return

- ESP_OK : success
- other : failed

esp_err_t **esp_bt_sleep_disable**(void)

disable bluetooth modem sleep

Note that this function shall not be invoked before esp_bt_controller_enable()

If esp_bt_sleep_disable() is called, bluetooth controller will not be allowed to enter modem sleep;

If ORIG modem sleep mode is in use, if this function is called, bluetooth controller may not immediately wake up if it is dormant then. In this case, esp_bt_controller_wakeup_request() can be used to shorten the time for wakeup.

Return

- ESP_OK : success
- other : failed

esp_err_t **esp_ble_scan_dupilcate_list_flush**(void)

Manually clear scan duplicate list.

Note that scan duplicate list will be automatically cleared when the maximum amount of device in the filter is reached the amount of device in the filter can be configured in menuconfig.

Return

- ESP_OK : success
- other : failed

Structures

struct esp_bt_controller_config_t

Controller config options, depend on config mask. Config mask indicate which functions enabled, this means some options or parameters of some functions enabled by config mask.

Public Members

uint16_t **controller_task_stack_size**

Bluetooth controller task stack size

uint8_t **controller_task_prio**

Bluetooth controller task priority

uint8_t **hci_uart_no**

If use UART1/2 as HCI IO interface, indicate UART number

uint32_t **hci_uart_baudrate**

If use UART1/2 as HCI IO interface, indicate UART baudrate

uint8_t **scan_duplicate_mode**

scan duplicate mode

uint8_t **scan_duplicate_type**

scan duplicate type

uint16_t **normal_adv_size**

Normal adv size for scan duplicate

uint16_t **mesh_adv_size**

Mesh adv size for scan duplicate

uint16_t **send_adv_reserved_size**

Controller minimum memory value

uint32_t **controller_debug_flag**

Controller debug log flag

uint8_t **mode**

Controller mode: BR/EDR, BLE or Dual Mode

uint8_t **ble_max_conn**

BLE maximum connection numbers

uint8_t **bt_max_acl_conn**

BR/EDR maximum ACL connection numbers

uint8_t **bt_sco_datapath**

SCO data path, i.e. HCI or PCM module

bool **auto_latency**

BLE auto latency, used to enhance classic BT performance

bool **bt_legacy_auth_vs_evt**

BR/EDR Legacy auth complete event required to protect from BIAS attack

uint8_t **bt_max_sync_conn**

BR/EDR maximum ACL connection numbers. Effective in menuconfig

uint32_t **magic**

Magic number

struct esp_vhci_host_callback

esp_vhci_host_callback used for vhci call host function to notify what host need to do

Public Members

void (***notify_host_send_available**)(void)

callback used to notify that the host can send packet to controller

int (***notify_host_recv**)(uint8_t *data, uint16_t len)

callback used to notify that the controller has a packet to send to the host

Macros

ESP_BT_CONTROLLER_CONFIG_MAGIC_VAL

BT_CONTROLLER_INIT_CONFIG_DEFAULT()

Type Definitions

typedef struct *esp_vhci_host_callback* **esp_vhci_host_callback_t**

esp_vhci_host_callback used for vhci call host function to notify what host need to do

Enumerations

enum esp_bt_mode_t

Bluetooth mode for controller enable/disable.

Values:

ESP_BT_MODE_IDLE = 0x00

Bluetooth is not running

ESP_BT_MODE_BLE = 0x01

Run BLE mode

`ESP_BT_MODE_CLASSIC_BT` = 0x02
Run Classic BT mode

`ESP_BT_MODE_BTDM` = 0x03
Run dual mode

enum esp_bt_controller_status_t
Bluetooth controller enable/disable/initialised/de-initialised status.

Values:

`ESP_BT_CONTROLLER_STATUS_IDLE` = 0

`ESP_BT_CONTROLLER_STATUS_INITED`

`ESP_BT_CONTROLLER_STATUS_ENABLED`

`ESP_BT_CONTROLLER_STATUS_NUM`

enum esp_ble_power_type_t
BLE tx power type ESP_BLE_PWR_TYPE_CONN_HDL0-8: for each connection, and only be set after connection completed. when disconnect, the correspond TX power is not effected. ESP_BLE_PWR_TYPE_ADV : for advertising/scan response. ESP_BLE_PWR_TYPE_SCAN : for scan. ESP_BLE_PWR_TYPE_DEFAULT : if each connection' s TX power is not set, it will use this default value. if neither in scan mode nor in adv mode, it will use this default value. If none of power type is set, system will use ESP_PWR_LVL_P3 as default for ADV/SCAN/CONN0-9.

Values:

`ESP_BLE_PWR_TYPE_CONN_HDL0` = 0
For connection handle 0

`ESP_BLE_PWR_TYPE_CONN_HDL1` = 1
For connection handle 1

`ESP_BLE_PWR_TYPE_CONN_HDL2` = 2
For connection handle 2

`ESP_BLE_PWR_TYPE_CONN_HDL3` = 3
For connection handle 3

`ESP_BLE_PWR_TYPE_CONN_HDL4` = 4
For connection handle 4

`ESP_BLE_PWR_TYPE_CONN_HDL5` = 5
For connection handle 5

`ESP_BLE_PWR_TYPE_CONN_HDL6` = 6
For connection handle 6

`ESP_BLE_PWR_TYPE_CONN_HDL7` = 7
For connection handle 7

`ESP_BLE_PWR_TYPE_CONN_HDL8` = 8

For connection handle 8

`ESP_BLE_PWR_TYPE_ADV` = 9

For advertising

`ESP_BLE_PWR_TYPE_SCAN` = 10

For scan

`ESP_BLE_PWR_TYPE_DEFAULT` = 11

For default, if not set other, it will use default value

`ESP_BLE_PWR_TYPE_NUM` = 12

TYPE numbers

enum esp_power_level_t

Bluetooth TX power level(index), it' s just a index corresponding to power(dbm).

Values:

`ESP_PWR_LVL_N12` = 0

Corresponding to -12dbm

`ESP_PWR_LVL_N9` = 1

Corresponding to -9dbm

`ESP_PWR_LVL_N6` = 2

Corresponding to -6dbm

`ESP_PWR_LVL_N3` = 3

Corresponding to -3dbm

`ESP_PWR_LVL_N0` = 4

Corresponding to 0dbm

`ESP_PWR_LVL_P3` = 5

Corresponding to +3dbm

`ESP_PWR_LVL_P6` = 6

Corresponding to +6dbm

`ESP_PWR_LVL_P9` = 7

Corresponding to +9dbm

`ESP_PWR_LVL_N14` = ESP_PWR_LVL_N12

Backward compatibility! Setting to -14dbm will actually result to -12dbm

`ESP_PWR_LVL_N11` = ESP_PWR_LVL_N9

Backward compatibility! Setting to -11dbm will actually result to -9dbm

`ESP_PWR_LVL_N8` = ESP_PWR_LVL_N6

Backward compatibility! Setting to -8dbm will actually result to -6dbm

`ESP_PWR_LVL_N5` = ESP_PWR_LVL_N3
: Backward compatibility! Setting to -5dbm will actually result to -3dbm

`ESP_PWR_LVL_N2` = ESP_PWR_LVL_N0
: Backward compatibility! Setting to -2dbm will actually result to 0dbm

`ESP_PWR_LVL_P1` = ESP_PWR_LVL_P3
: Backward compatibility! Setting to +1dbm will actually result to +3dbm

`ESP_PWR_LVL_P4` = ESP_PWR_LVL_P6
: Backward compatibility! Setting to +4dbm will actually result to +6dbm

`ESP_PWR_LVL_P7` = ESP_PWR_LVL_P9
: Backward compatibility! Setting to +7dbm will actually result to +9dbm

enum esp_sco_data_path_t
: Bluetooth audio data transport path.

Values:

`ESP_SCO_DATA_PATH_HCI` = 0
: data over HCI transport

`ESP_SCO_DATA_PATH_PCM` = 1
: data over PCM interface

3.1.2 BT COMMON

BT GENERIC DEFINES

Overview

Instructions

Application Example

Instructions

API Reference

Header File

- bt/bluedroid/api/include/api/esp_bt_defs.h

Structures

struct esp_bt_uuid_t

UUID type.

Public Members

uint16_t **len**

UUID length, 16bit, 32bit or 128bit

union *esp_bt_uuid_t*::[**anonymous**] **uuid**

UUID

Macros

ESP_BLUEDROID_STATUS_CHECK(status)

ESP_BT_OCTET16_LEN

ESP_BT_OCTET8_LEN

ESP_DEFAULT_GATT_IF

Default GATT interface id.

ESP_BLE_CONN_INT_MIN

relate to BTM_BLE_CONN_INT_MIN in stack/btm_ble_api.h

ESP_BLE_CONN_INT_MAX

relate to BTM_BLE_CONN_INT_MAX in stack/btm_ble_api.h

ESP_BLE_CONN_LATENCY_MAX

relate to ESP_BLE_CONN_LATENCY_MAX in stack/btm_ble_api.h

ESP_BLE_CONN_SUP_TOUT_MIN

relate to BTM_BLE_CONN_SUP_TOUT_MIN in stack/btm_ble_api.h

ESP_BLE_CONN_SUP_TOUT_MAX

relate to ESP_BLE_CONN_SUP_TOUT_MAX in stack/btm_ble_api.h

ESP_BLE_CONN_PARAM_UNDEF

ESP_BLE_SCAN_PARAM_UNDEF

ESP_BLE_IS_VALID_PARAM(x, min, max)

Check the param is valid or not.

ESP_UUID_LEN_16

ESP_UUID_LEN_32

ESP_UUID_LEN_128

ESP_BD_ADDR_LEN
: Bluetooth address length.

ESP_BLE_ENC_KEY_MASK
: Used to exchange the encryption key in the init key & response key.

ESP_BLE_ID_KEY_MASK
: Used to exchange the IRK key in the init key & response key.

ESP_BLE_CSR_KEY_MASK
: Used to exchange the CSRK key in the init key & response key.

ESP_BLE_LINK_KEY_MASK
: Used to exchange the link key(this key just used in the BLE & BR/EDR coexist mode) in the init key & response key.

ESP_APP_ID_MIN
: Minimum of the application id.

ESP_APP_ID_MAX
: Maximum of the application id.

ESP_BD_ADDR_STR

ESP_BD_ADDR_HEX(addr)

Type Definitions

typedef uint8_t esp_bt_octet16_t[ESP_BT_OCTET16_LEN]

typedef uint8_t esp_bt_octet8_t[ESP_BT_OCTET8_LEN]

typedef uint8_t esp_link_key[ESP_BT_OCTET16_LEN]

typedef uint8_t esp_bd_addr_t[ESP_BD_ADDR_LEN]
: Bluetooth device address.

typedef uint8_t esp_ble_key_mask_t

Enumerations

enum esp_bt_status_t
: Status Return Value.

  Values:

  ESP_BT_STATUS_SUCCESS = 0

  ESP_BT_STATUS_FAIL

ESP_BT_STATUS_NOT_READY

ESP_BT_STATUS_NOMEM

ESP_BT_STATUS_BUSY

ESP_BT_STATUS_DONE = 5

ESP_BT_STATUS_UNSUPPORTED

ESP_BT_STATUS_PARM_INVALID

ESP_BT_STATUS_UNHANDLED

ESP_BT_STATUS_AUTH_FAILURE

ESP_BT_STATUS_RMT_DEV_DOWN = 10

ESP_BT_STATUS_AUTH_REJECTED

ESP_BT_STATUS_INVALID_STATIC_RAND_ADDR

ESP_BT_STATUS_PENDING

ESP_BT_STATUS_UNACCEPT_CONN_INTERVAL

ESP_BT_STATUS_PARAM_OUT_OF_RANGE

ESP_BT_STATUS_TIMEOUT

ESP_BT_STATUS_PEER_LE_DATA_LEN_UNSUPPORTED

ESP_BT_STATUS_CONTROL_LE_DATA_LEN_UNSUPPORTED

ESP_BT_STATUS_ERR_ILLEGAL_PARAMETER_FMT

ESP_BT_STATUS_MEMORY_FULL

enum esp_bt_dev_type_t

Bluetooth device type.

Values:

ESP_BT_DEVICE_TYPE_BREDR = 0x01

ESP_BT_DEVICE_TYPE_BLE = 0x02

ESP_BT_DEVICE_TYPE_DUMO = 0x03

enum esp_ble_addr_type_t

BLE device address type.

Values:

BLE_ADDR_TYPE_PUBLIC = 0x00

BLE_ADDR_TYPE_RANDOM = 0x01

BLE_ADDR_TYPE_RPA_PUBLIC = 0x02

`BLE_ADDR_TYPE_RPA_RANDOM` = 0x03

BT MAIN API

Overview

Instructions

Application Example

Instructions

API Reference

Header File

- bt/bluedroid/api/include/api/esp_bt_main.h

Functions

esp_bluedroid_status_t **esp_bluedroid_get_status**(void)

Get bluetooth stack status.

Return Bluetooth stack status

esp_err_t **esp_bluedroid_enable**(void)

Enable bluetooth, must after esp_bluedroid_init()

Return

- ESP_OK : Succeed
- Other : Failed

esp_err_t **esp_bluedroid_disable**(void)

Disable bluetooth, must prior to esp_bluedroid_deinit()

Return

- ESP_OK : Succeed
- Other : Failed

esp_err_t **esp_bluedroid_init**(void)

Init and alloc the resource for bluetooth, must be prior to every bluetooth stuff.

Return

- ESP_OK : Succeed
- Other : Failed

esp_err_t **esp_bluedroid_deinit**(void)

Deinit and free the resource for bluetooth, must be after every bluetooth stuff.

Return

- ESP_OK : Succeed
- Other : Failed

Enumerations

enum esp_bluedroid_status_t

Bluetooth stack status type, to indicate whether the bluetooth stack is ready.

Values:

ESP_BLUEDROID_STATUS_UNINITIALIZED = 0

Bluetooth not initialized

ESP_BLUEDROID_STATUS_INITIALIZED

Bluetooth initialized but not enabled

ESP_BLUEDROID_STATUS_ENABLED

Bluetooth initialized and enabled

BT DEVICE APIs

Overview

Bluetooth device reference APIs.

Instructions

Application Example

Instructions

API Reference

Header File

- bt/bluedroid/api/include/api/esp_bt_device.h

Functions

`const` uint8_t *`esp_bt_dev_get_address`(void)

Get bluetooth device address. Must use after "esp_bluedroid_enable" .

Return bluetooth device address (six bytes), or NULL if bluetooth stack is not enabled

esp_err_t `esp_bt_dev_set_device_name(const` char **name*)

Set bluetooth device name. This function should be called after esp_bluedroid_enable() completes successfully. A BR/EDR/LE device type shall have a single Bluetooth device name which shall be identical irrespective of the physical channel used to perform the name discovery procedure.

Return

- ESP_OK : Succeed
- ESP_ERR_INVALID_ARG : if name is NULL pointer or empty, or string length out of limit
- ESP_ERR_INVALID_STATE : if bluetooth stack is not yet enabled
- ESP_FAIL : others

Parameters

- `name`: : device name to be set

3.1.3 BT LE

GAP API

Overview

Instructions

Application Example

Check bluetooth folder in ESP-IDF examples, which contains the following demos and their tutorials:

- This is a SMP security client demo and its tutorial. This demo initiates its security parameters and acts as a GATT client, which can send a security request to the peer device and then complete the encryption procedure.
  - bluetooth/gatt_security_client
  - GATT Security Client Example Walkthrough
- This is a SMP security server demo and its tutorial. This demo initiates its security parameters and acts as a GATT server, which can send a pair request to the peer device and then complete the encryption procedure.
  - bluetooth/gatt_security_server
  - GATT Security Server Example Walkthrough

API Reference

Header File

- bt/bluedroid/api/include/api/esp_gap_ble_api.h

Functions

esp_err_t **esp_ble_gap_register_callback**(*esp_gap_ble_cb_t callback*)

This function is called to occur gap event, such as scan result.

Return

- ESP_OK : success
- other : failed

Parameters

- `callback`: callback function

esp_err_t **esp_ble_gap_config_adv_data**(*esp_ble_adv_data_t *adv_data*)

This function is called to override the BTA default ADV parameters.

Return

- ESP_OK : success
- other : failed

Parameters

- `adv_data`: Pointer to User defined ADV data structure. This memory space can not be freed until callback of config_adv_data is received.

esp_err_t **esp_ble_gap_set_scan_params**(*esp_ble_scan_params_t* **scan_params*)

This function is called to set scan parameters.

Return

- ESP_OK : success
- other : failed

Parameters

- `scan_params`: Pointer to User defined scan_params data structure. This memory space can not be freed until callback of set_scan_params

esp_err_t **esp_ble_gap_start_scanning**(uint32_t *duration*)

This procedure keep the device scanning the peer device which advertising on the air.

Return

- ESP_OK : success
- other : failed

Parameters

- `duration`: Keeping the scanning time, the unit is second.

esp_err_t **esp_ble_gap_stop_scanning**(void)

This function call to stop the device scanning the peer device which advertising on the air.

Return

- ESP_OK : success
  - other : failed

esp_err_t **esp_ble_gap_start_advertising**(*esp_ble_adv_params_t* **adv_params*)

This function is called to start advertising.

Return

- ESP_OK : success
- other : failed

Parameters

- `adv_params`: pointer to User defined adv_params data structure.

esp_err_t **esp_ble_gap_stop_advertising**(void)

This function is called to stop advertising.

Return

- ESP_OK : success
- other : failed

esp_err_t **esp_ble_gap_update_conn_params**(*esp_ble_conn_update_params_t* **params*)

Update connection parameters, can only be used when connection is up.

Return

- ESP_OK : success
- other : failed

Parameters

- **params**: - connection update parameters

esp_err_t **esp_ble_gap_set_pkt_data_len**(*esp_bd_addr_t remote_device*, uint16_t *tx_data_length*)

This function is to set maximum LE data packet size.

Return

- ESP_OK : success
- other : failed

esp_err_t **esp_ble_gap_set_rand_addr**(*esp_bd_addr_t rand_addr*)

This function sets the static Random Address and Non-Resolvable Private Address for the application.

Return

- ESP_OK : success
- other : failed

Parameters

- **rand_addr**: the random address which should be setting

esp_err_t **esp_ble_gap_clear_rand_addr**(void)

This function clears the random address for the application.

Return

- ESP_OK : success
- other : failed

esp_err_t **esp_ble_gap_config_local_privacy**(bool *privacy_enable*)

Enable/disable privacy on the local device.

Return

- ESP_OK : success
- other : failed

Parameters

- `privacy_enable`: - enable/disable privacy on remote device.

esp_err_t **esp_ble_gap_config_local_icon**(uint16_t *icon*)

set local gap appearance icon

Return

- ESP_OK : success
- other : failed

Parameters

- `icon`: - External appearance value, these values are defined by the Bluetooth SIG, please refer to https://www.bluetooth.com/specifications/gatt/viewer?attributeXmlFile=org.bluetooth.characteristic.gap.appearance.xml

esp_err_t **esp_ble_gap_update_whitelist**(bool *add_remove*, *esp_bd_addr_t* *remote_bda*)

Add or remove device from white list.

Return

- ESP_OK : success
- other : failed

Parameters

- `add_remove`: the value is true if added the ble device to the white list, and false remove to the white list.
- `remote_bda`: the remote device address add/remove from the white list.

esp_err_t **esp_ble_gap_get_whitelist_size**(uint16_t **length*)

Get the whitelist size in the controller.

Return

- ESP_OK : success
- other : failed

Parameters

- `length`: the white list length.

esp_err_t **esp_ble_gap_set_prefer_conn_params**(*esp_bd_addr_t bd_addr*, uint16_t *min_conn_int*, uint16_t *max_conn_int*, uint16_t *slave_latency*, uint16_t *supervision_tout*)

This function is called to set the preferred connection parameters when default connection parameter is not desired before connecting. This API can only be used in the master role.

Return

- ESP_OK : success
- other : failed

Parameters

- `bd_addr`: BD address of the peripheral
- `min_conn_int`: minimum preferred connection interval
- `max_conn_int`: maximum preferred connection interval
- `slave_latency`: preferred slave latency
- `supervision_tout`: preferred supervision timeout

esp_err_t **esp_ble_gap_set_device_name**(**const** char **name*)

Set device name to the local device.

Return

- ESP_OK : success
- other : failed

Parameters

- `name`: - device name.

esp_err_t **esp_ble_gap_get_local_used_addr**(*esp_bd_addr_t local_used_addr*, uint8_t **addr_type*)

This function is called to get local used address and adress type. uint8_t *esp_bt_dev_get_address(void) get the public address.

Return - ESP_OK : success

- other : failed

Parameters

- `local_used_addr`: - current local used ble address (six bytes)
- `addr_type`: - ble address type

uint8_t *esp_ble_resolve_adv_data(uint8_t *adv_data, uint8_t type, uint8_t *length)

This function is called to get ADV data for a specific type.

Return pointer of ADV data

Parameters

- adv_data: - pointer of ADV data which to be resolved
- type: - finding ADV data type
- length: - return the length of ADV data not including type

esp_err_t esp_ble_gap_config_adv_data_raw(uint8_t *raw_data, uint32_t raw_data_len)

This function is called to set raw advertising data. User need to fill ADV data by self.

Return

- ESP_OK : success
- other : failed

Parameters

- raw_data: : raw advertising data
- raw_data_len: : raw advertising data length , less than 31 bytes

esp_err_t esp_ble_gap_config_scan_rsp_data_raw(uint8_t *raw_data, uint32_t raw_data_len)

This function is called to set raw scan response data. User need to fill scan response data by self.

Return

- ESP_OK : success
- other : failed

Parameters

- raw_data: : raw scan response data
- raw_data_len: : raw scan response data length , less than 31 bytes

esp_err_t esp_ble_gap_read_rssi(esp_bd_addr_t remote_addr)

This function is called to read the RSSI of remote device. The address of link policy results are returned in the gap callback function with ESP_GAP_BLE_READ_RSSI_COMPLETE_EVT event.

Return

- ESP_OK : success
- other : failed

Parameters

- `remote_addr`: : The remote connection device address.

esp_err_t **esp_ble_gap_add_duplicate_scan_exceptional_device**(*esp_ble_duplicate_exceptional_info_type_t type*, *esp_duplicate_info_t device_info*)

This function is called to add a device info into the duplicate scan exceptional list.

Return

- ESP_OK : success
- other : failed

Parameters

- `type`: device info type, it is defined in esp_ble_duplicate_exceptional_info_type_t when type is MESH_BEACON_TYPE, MESH_PROV_SRV_ADV or MESH_PROXY_SRV_ADV , device_info is invalid.
- `device_info`: the device information.

esp_err_t **esp_ble_gap_remove_duplicate_scan_exceptional_device**(*esp_ble_duplicate_exceptional_info_type_t type*, *esp_duplicate_info_t device_info*)

This function is called to remove a device info from the duplicate scan exceptional list.

Return

- ESP_OK : success
- other : failed

Parameters

- `type`: device info type, it is defined in esp_ble_duplicate_exceptional_info_type_t when type is MESH_BEACON_TYPE, MESH_PROV_SRV_ADV or MESH_PROXY_SRV_ADV , device_info is invalid.
- `device_info`: the device information.

esp_err_t **esp_ble_gap_clean_duplicate_scan_exceptional_list**(*esp_duplicate_scan_exceptional_list_type_t list_type*)

This function is called to clean the duplicate scan exceptional list. This API will delete all device information in the duplicate scan exceptional list.

Return

- ESP_OK : success
- other : failed

Parameters

- `list_type`: duplicate scan exceptional list type, the value can be one or more of esp_duplicate_scan_exceptional_list_type_t.

esp_err_t **esp_ble_gap_set_security_param**(*esp_ble_sm_param_t param_type*, void **value*, uint8_t *len*)

Set a GAP security parameter value. Overrides the default value.

Return - ESP_OK : success

- other : failed

Parameters

- `param_type`: : the type of the param which to be set
- `value`: : the param value
- `len`: : the length of the param value

esp_err_t **esp_ble_gap_security_rsp**(*esp_bd_addr_t bd_addr*, bool *accept*)

Grant security request access.

Return - ESP_OK : success

- other : failed

Parameters

- `bd_addr`: : BD address of the peer
- `accept`: : accept the security request or not

esp_err_t **esp_ble_set_encryption**(*esp_bd_addr_t bd_addr*, *esp_ble_sec_act_t sec_act*)

Set a gap parameter value. Use this function to change the default GAP parameter values.

Return - ESP_OK : success

- other : failed

Parameters

- `bd_addr`: : the address of the peer device need to encryption
- `sec_act`: : This is the security action to indicate what kind of BLE security level is required for the BLE link if the BLE is supported

esp_err_t **esp_ble_passkey_reply**(*esp_bd_addr_t bd_addr*, bool *accept*, uint32_t *passkey*)

Reply the key value to the peer device in the legacy connection stage.

Return - ESP_OK : success

- other : failed

Parameters

- `bd_addr`: : BD address of the peer
- `accept`: : passkey entry successful or declined.
- `passkey`: : passkey value, must be a 6 digit number, can be lead by 0.

esp_err_t **esp_ble_confirm_reply**(*esp_bd_addr_t bd_addr*, bool *accept*)

Reply the confirm value to the peer device in the secure connection stage.

Return - ESP_OK : success

- other : failed

Parameters

- `bd_addr`: : BD address of the peer device
- `accept`: : numbers to compare are the same or different.

esp_err_t **esp_ble_remove_bond_device**(*esp_bd_addr_t bd_addr*)

Removes a device from the security database list of peer device. It manages unpairing event while connected.

Return - ESP_OK : success

- other : failed

Parameters

- `bd_addr`: : BD address of the peer device

int **esp_ble_get_bond_device_num**(void)

Get the device number from the security database list of peer device. It will return the device bonded number immediately.

Return - >= 0 : bonded devices number.

- ESP_FAIL : failed

esp_err_t **esp_ble_get_bond_device_list**(int **dev_num*, *esp_ble_bond_dev_t *dev_list*)

Get the device from the security database list of peer device. It will return the device bonded information immediately.

Return - ESP_OK : success

- other : failed

Parameters

- `dev_num`: Indicate the dev_list array(buffer) size as input. If dev_num is large enough, it means the actual number as output. Suggest that dev_num value equal to esp_ble_get_bond_device_num().
- `dev_list`: an array(buffer) of *esp_ble_bond_dev_t* type. Use for storing the bonded devices address. The dev_list should be allocated by who call this API.

esp_err_t **esp_ble_oob_req_reply**(*esp_bd_addr_t bd_addr*, uint8_t **TK*, uint8_t *len*)

This function is called to provide the OOB data for SMP in response to ESP_GAP_BLE_OOB_REQ_EVT.

Return - ESP_OK : success

- other : failed

Parameters

- `bd_addr`: BD address of the peer device.
- `TK`: TK value, the TK value shall be a 128-bit random number
- `len`: length of tk, should always be 128-bit

esp_err_t **esp_ble_gap_disconnect**(*esp_bd_addr_t remote_device*)

This function is to disconnect the physical connection of the peer device gattc may have multiple virtual GATT server connections when multiple app_id registered. esp_ble_gattc_close (esp_gatt_if_t gattc_if, uint16_t conn_id) only close one virtual GATT server connection. if there exist other virtual GATT server connections, it does not disconnect the physical connection. esp_ble_gap_disconnect(esp_bd_addr_t remote_device) disconnect the physical connection directly.

Return - ESP_OK : success

- other : failed

Parameters

- `remote_device`: : BD address of the peer device

esp_err_t **esp_gap_ble_set_authorization**(*esp_bd_addr_t bd_addr*, bool *authorize*)

This function is called to authorized a link after Authentication(MITM protection)

Return - ESP_OK : success

- other : failed

Parameters

- `bd_addr`: BD address of the peer device.
- `authorize`: Authorized the link or not.

Unions

union esp_ble_key_value_t

#include <esp_gap_ble_api.h> union type of the security key value

Public Members

esp_ble_penc_keys_t **penc_key**

received peer encryption key

esp_ble_pcsrk_keys_t **pcsrk_key**

received peer device SRK

esp_ble_pid_keys_t **pid_key**

peer device ID key

esp_ble_lenc_keys_t **lenc_key**

local encryption reproduction keys LTK = = d1(ER,DIV,0)

esp_ble_lcsrk_keys **lcsrk_key**

local device CSRK = d1(ER,DIV,1)

union esp_ble_sec_t

#include <esp_gap_ble_api.h> union associated with ble security

Public Members

esp_ble_sec_key_notif_t **key_notif**

passkey notification

esp_ble_sec_req_t **ble_req**

BLE SMP related request

esp_ble_key_t **ble_key**

BLE SMP keys used when pairing

esp_ble_local_id_keys_t **ble_id_keys**

BLE IR event

esp_ble_auth_cmpl_t **auth_cmpl**

Authentication complete indication.

union esp_ble_gap_cb_param_t

#include <esp_gap_ble_api.h> Gap callback parameters union.

Public Members

struct *esp_ble_gap_cb_param_t*::*ble_adv_data_cmpl_evt_param* **adv_data_cmpl**

Event parameter of ESP_GAP_BLE_ADV_DATA_SET_COMPLETE_EVT

struct *esp_ble_gap_cb_param_t*::*ble_scan_rsp_data_cmpl_evt_param* **scan_rsp_data_cmpl**

Event parameter of ESP_GAP_BLE_SCAN_RSP_DATA_SET_COMPLETE_EVT

struct *esp_ble_gap_cb_param_t*::*ble_scan_param_cmpl_evt_param* **scan_param_cmpl**

Event parameter of ESP_GAP_BLE_SCAN_PARAM_SET_COMPLETE_EVT

struct *esp_ble_gap_cb_param_t*::*ble_scan_result_evt_param* **scan_rst**

Event parameter of ESP_GAP_BLE_SCAN_RESULT_EVT

struct *esp_ble_gap_cb_param_t*::*ble_adv_data_raw_cmpl_evt_param* **adv_data_raw_cmpl**

Event parameter of ESP_GAP_BLE_ADV_DATA_RAW_SET_COMPLETE_EVT

struct *esp_ble_gap_cb_param_t*::*ble_scan_rsp_data_raw_cmpl_evt_param* **scan_rsp_data_raw_cmpl**

Event parameter of ESP_GAP_BLE_SCAN_RSP_DATA_RAW_SET_COMPLETE_EVT

struct *esp_ble_gap_cb_param_t*::*ble_adv_start_cmpl_evt_param* **adv_start_cmpl**

Event parameter of ESP_GAP_BLE_ADV_START_COMPLETE_EVT

struct *esp_ble_gap_cb_param_t*::*ble_scan_start_cmpl_evt_param* **scan_start_cmpl**

Event parameter of ESP_GAP_BLE_SCAN_START_COMPLETE_EVT

esp_ble_sec_t **ble_security**

ble gap security union type

struct *esp_ble_gap_cb_param_t*::*ble_scan_stop_cmpl_evt_param* **scan_stop_cmpl**

Event parameter of ESP_GAP_BLE_SCAN_STOP_COMPLETE_EVT

struct *esp_ble_gap_cb_param_t*::*ble_adv_stop_cmpl_evt_param* **adv_stop_cmpl**

Event parameter of ESP_GAP_BLE_ADV_STOP_COMPLETE_EVT

struct *esp_ble_gap_cb_param_t*::*ble_set_rand_cmpl_evt_param* **set_rand_addr_cmpl**

Event parameter of ESP_GAP_BLE_SET_STATIC_RAND_ADDR_EVT

struct *esp_ble_gap_cb_param_t*::*ble_update_conn_params_evt_param* **update_conn_params**

Event parameter of ESP_GAP_BLE_UPDATE_CONN_PARAMS_EVT

struct *esp_ble_gap_cb_param_t*::*ble_pkt_data_length_cmpl_evt_param* **pkt_data_lenth_cmpl**

Event parameter of ESP_GAP_BLE_SET_PKT_LENGTH_COMPLETE_EVT

struct *esp_ble_gap_cb_param_t*::*ble_local_privacy_cmpl_evt_param* **local_privacy_cmpl**

Event parameter of ESP_GAP_BLE_SET_LOCAL_PRIVACY_COMPLETE_EVT

struct *esp_ble_gap_cb_param_t*::*ble_remove_bond_dev_cmpl_evt_param* **remove_bond_dev_cmpl**

Event parameter of ESP_GAP_BLE_REMOVE_BOND_DEV_COMPLETE_EVT

struct *esp_ble_gap_cb_param_t*::*ble_clear_bond_dev_cmpl_evt_param* **clear_bond_dev_cmpl**

Event parameter of ESP_GAP_BLE_CLEAR_BOND_DEV_COMPLETE_EVT

struct *esp_ble_gap_cb_param_t*::*ble_get_bond_dev_cmpl_evt_param* **get_bond_dev_cmpl**
Event parameter of ESP_GAP_BLE_GET_BOND_DEV_COMPLETE_EVT

struct *esp_ble_gap_cb_param_t*::*ble_read_rssi_cmpl_evt_param* **read_rssi_cmpl**
Event parameter of ESP_GAP_BLE_READ_RSSI_COMPLETE_EVT

struct *esp_ble_gap_cb_param_t*::*ble_update_whitelist_cmpl_evt_param* **update_whitelist_cmpl**
Event parameter of ESP_GAP_BLE_UPDATE_WHITELIST_COMPLETE_EVT

struct *esp_ble_gap_cb_param_t*::*ble_update_duplicate_exceptional_list_cmpl_evt_param* **update_duplicate_exc**
Event parameter of ESP_GAP_BLE_UPDATE_DUPLICATE_EXCEPTIONAL_LIST_COMPLETE_EVT

struct ble_adv_data_cmpl_evt_param
#include <esp_gap_ble_api.h> ESP_GAP_BLE_ADV_DATA_SET_COMPLETE_EVT.

Public Members

esp_bt_status_t **status**
Indicate the set advertising data operation success status

struct ble_adv_data_raw_cmpl_evt_param
#include <esp_gap_ble_api.h> ESP_GAP_BLE_ADV_DATA_RAW_SET_COMPLETE_EVT.

Public Members

esp_bt_status_t **status**
Indicate the set raw advertising data operation success status

struct ble_adv_start_cmpl_evt_param
#include <esp_gap_ble_api.h> ESP_GAP_BLE_ADV_START_COMPLETE_EVT.

Public Members

esp_bt_status_t **status**
Indicate advertising start operation success status

struct ble_adv_stop_cmpl_evt_param
#include <esp_gap_ble_api.h> ESP_GAP_BLE_ADV_STOP_COMPLETE_EVT.

Public Members

esp_bt_status_t **status**
Indicate adv stop operation success status

struct ble_clear_bond_dev_cmpl_evt_param
#include <esp_gap_ble_api.h> ESP_GAP_BLE_CLEAR_BOND_DEV_COMPLETE_EVT.

Public Members

esp_bt_status_t **status**

Indicate the clear bond device operation success status

struct ble_get_bond_dev_cmpl_evt_param

#include <esp_gap_ble_api.h> ESP_GAP_BLE_GET_BOND_DEV_COMPLETE_EVT.

Public Members

esp_bt_status_t **status**

Indicate the get bond device operation success status

uint8_t **dev_num**

Indicate the get number device in the bond list

esp_ble_bond_dev_t ***bond_dev**

the pointer to the bond device Structure

struct ble_local_privacy_cmpl_evt_param

#include <esp_gap_ble_api.h> ESP_GAP_BLE_SET_LOCAL_PRIVACY_COMPLETE_EVT.

Public Members

esp_bt_status_t **status**

Indicate the set local privacy operation success status

struct ble_pkt_data_length_cmpl_evt_param

#include <esp_gap_ble_api.h> ESP_GAP_BLE_SET_PKT_LENGTH_COMPLETE_EVT.

Public Members

esp_bt_status_t **status**

Indicate the set pkt data length operation success status

esp_ble_pkt_data_length_params_t **params**

pkt data length value

struct ble_read_rssi_cmpl_evt_param

#include <esp_gap_ble_api.h> ESP_GAP_BLE_READ_RSSI_COMPLETE_EVT.

Public Members

esp_bt_status_t **status**

Indicate the read adv tx power operation success status

int8_t **rssi**

The ble remote device rssi value, the range is from -127 to 20, the unit is dbm, if the RSSI cannot be read, the RSSI metric shall be set to 127.

esp_bd_addr_t **remote_addr**

The remote device address

struct ble_remove_bond_dev_cmpl_evt_param

#include <esp_gap_ble_api.h> ESP_GAP_BLE_REMOVE_BOND_DEV_COMPLETE_EVT.

Public Members

esp_bt_status_t **status**

Indicate the remove bond device operation success status

esp_bd_addr_t **bd_addr**

The device address which has been remove from the bond list

struct ble_scan_param_cmpl_evt_param

#include <esp_gap_ble_api.h> ESP_GAP_BLE_SCAN_PARAM_SET_COMPLETE_EVT.

Public Members

esp_bt_status_t **status**

Indicate the set scan param operation success status

struct ble_scan_result_evt_param

#include <esp_gap_ble_api.h> ESP_GAP_BLE_SCAN_RESULT_EVT.

Public Members

esp_gap_search_evt_t **search_evt**

Search event type

esp_bd_addr_t **bda**

Bluetooth device address which has been searched

esp_bt_dev_type_t **dev_type**

Device type

esp_ble_addr_type_t **ble_addr_type**

Ble device address type

esp_ble_evt_type_t **ble_evt_type**

Ble scan result event type

int **rssi**

Searched device' s RSSI

uint8_t **ble_adv**[**ESP_BLE_ADV_DATA_LEN_MAX** + **ESP_BLE_SCAN_RSP_DATA_LEN_MAX**]

Received EIR

int **flag**

Advertising data flag bit

int **num_resps**

Scan result number

uint8_t **adv_data_len**

Adv data length

uint8_t **scan_rsp_len**

Scan response length

uint32_t **num_dis**

The number of discard packets

struct ble_scan_rsp_data_cmpl_evt_param

#include <esp_gap_ble_api.h> ESP_GAP_BLE_SCAN_RSP_DATA_SET_COMPLETE_EVT.

Public Members

esp_bt_status_t **status**

Indicate the set scan response data operation success status

struct ble_scan_rsp_data_raw_cmpl_evt_param

#include <esp_gap_ble_api.h> ESP_GAP_BLE_SCAN_RSP_DATA_RAW_SET_COMPLETE_EVT.

Public Members

esp_bt_status_t **status**

Indicate the set raw advertising data operation success status

struct ble_scan_start_cmpl_evt_param

#include <esp_gap_ble_api.h> ESP_GAP_BLE_SCAN_START_COMPLETE_EVT.

Public Members

esp_bt_status_t **status**

Indicate scan start operation success status

struct ble_scan_stop_cmpl_evt_param

#include <esp_gap_ble_api.h> ESP_GAP_BLE_SCAN_STOP_COMPLETE_EVT.

Public Members

esp_bt_status_t **status**

Indicate scan stop operation success status

struct ble_set_rand_cmpl_evt_param

#include <esp_gap_ble_api.h> ESP_GAP_BLE_SET_STATIC_RAND_ADDR_EVT.

Public Members

esp_bt_status_t **status**

Indicate set static rand address operation success status

struct ble_update_conn_params_evt_param

#include <esp_gap_ble_api.h> ESP_GAP_BLE_UPDATE_CONN_PARAMS_EVT.

Public Members

esp_bt_status_t **status**

Indicate update connection parameters success status

esp_bd_addr_t **bda**

Bluetooth device address

uint16_t **min_int**

Min connection interval

uint16_t **max_int**

Max connection interval

uint16_t **latency**

Slave latency for the connection in number of connection events. Range: 0x0000 to 0x01F3

uint16_t **conn_int**

Current connection interval

uint16_t **timeout**

Supervision timeout for the LE Link. Range: 0x000A to 0x0C80. Mandatory Range: 0x000A to 0x0C80 Time = N * 10 msec

struct ble_update_duplicate_exceptional_list_cmpl_evt_param

#include <esp_gap_ble_api.h> ESP_GAP_BLE_UPDATE_DUPLICATE_EXCEPTIONAL_LIST_COMPL

Public Members

esp_bt_status_t **status**

Indicate update duplicate scan exceptional list operation success status

uint8_t **subcode**

Define in esp_bt_duplicate_exceptional_subcode_type_t

uint16_t **length**

The length of device_info

esp_duplicate_info_t **device_info**

device information, when subcode is ESP_BLE_DUPLICATE_EXCEPTIONAL_LIST_CLEAN, the value is invalid

struct ble_update_whitelist_cmpl_evt_param

#include <esp_gap_ble_api.h> ESP_GAP_BLE_UPDATE_WHITELIST_COMPLETE_EVT.

Public Members

esp_bt_status_t **status**

Indicate the add or remove whitelist operation success status

esp_ble_wl_opration_t **wl_opration**

The value is ESP_BLE_WHITELIST_ADD if add address to whitelist operation success, ESP_BLE_WHITELIST_REMOVE if remove address from the whitelist operation success

Structures

struct esp_ble_adv_params_t

Advertising parameters.

Public Members

uint16_t **adv_int_min**

Minimum advertising interval for undirected and low duty cycle directed advertising. Range: 0x0020 to 0x4000 Default: N = 0x0800 (1.28 second) Time = N * 0.625 msec Time Range: 20 ms to 10.24 sec

uint16_t **adv_int_max**

Maximum advertising interval for undirected and low duty cycle directed advertising. Range: 0x0020 to 0x4000 Default: N = 0x0800 (1.28 second) Time = N * 0.625 msec Time Range: 20 ms to 10.24 sec Advertising max interval

esp_ble_adv_type_t **adv_type**

Advertising type

esp_ble_addr_type_t **own_addr_type**

Owner bluetooth device address type

esp_bd_addr_t **peer_addr**

Peer device bluetooth device address

esp_ble_addr_type_t **peer_addr_type**

Peer device bluetooth device address type, only support public address type and random address type

esp_ble_adv_channel_t **channel_map**

Advertising channel map

esp_ble_adv_filter_t **adv_filter_policy**

Advertising filter policy

struct esp_ble_adv_data_t

Advertising data content, according to "Supplement to the Bluetooth Core Specification".

Public Members

bool **set_scan_rsp**

Set this advertising data as scan response or not

bool **include_name**

Advertising data include device name or not

bool **include_txpower**

Advertising data include TX power

int **min_interval**

Advertising data show slave preferred connection min interval. The connection interval in the following manner: connIntervalmin = Conn_Interval_Min * 1.25 ms Conn_Interval_Min range: 0x0006 to 0x0C80 Value of 0xFFFF indicates no specific minimum. Values not defined above are reserved for future use.

int **max_interval**

Advertising data show slave preferred connection max interval. The connection interval in the following manner: connIntervalmax = Conn_Interval_Max * 1.25 ms Conn_Interval_Max range: 0x0006 to 0x0C80 Conn_Interval_Max shall be equal to or greater than the Conn_Interval_Min. Value of 0xFFFF indicates no specific maximum. Values not defined above are reserved for future use.

int **appearance**

External appearance of device

uint16_t **manufacturer_len**

Manufacturer data length

uint8_t ***p_manufacturer_data**

Manufacturer data point

uint16_t **service_data_len**
: Service data length

uint8_t ***p_service_data**
: Service data point

uint16_t **service_uuid_len**
: Service uuid length

uint8_t ***p_service_uuid**
: Service uuid array point

uint8_t **flag**
: Advertising flag of discovery mode, see BLE_ADV_DATA_FLAG detail

struct esp_ble_scan_params_t
: Ble scan parameters.

Public Members

esp_ble_scan_type_t **scan_type**
: Scan type

esp_ble_addr_type_t **own_addr_type**
: Owner address type

esp_ble_scan_filter_t **scan_filter_policy**
: Scan filter policy

uint16_t **scan_interval**
: Scan interval. This is defined as the time interval from when the Controller started its last LE scan until it begins the subsequent LE scan. Range: 0x0004 to 0x4000 Default: 0x0010 (10 ms) Time = N * 0.625 msec Time Range: 2.5 msec to 10.24 seconds

uint16_t **scan_window**
: Scan window. The duration of the LE scan. LE_Scan_Window shall be less than or equal to LE_Scan_Interval Range: 0x0004 to 0x4000 Default: 0x0010 (10 ms) Time = N * 0.625 msec Time Range: 2.5 msec to 10240 msec

esp_ble_scan_duplicate_t **scan_duplicate**
: The Scan_Duplicates parameter controls whether the Link Layer should filter out duplicate advertising reports (BLE_SCAN_DUPLICATE_ENABLE) to the Host, or if the Link Layer should generate advertising reports for each packet received

struct esp_ble_conn_update_params_t
: Connection update parameters.

Public Members

esp_bd_addr_t **bda**
Bluetooth device address

uint16_t **min_int**
Min connection interval

uint16_t **max_int**
Max connection interval

uint16_t **latency**
Slave latency for the connection in number of connection events. Range: 0x0000 to 0x01F3

uint16_t **timeout**
Supervision timeout for the LE Link. Range: 0x000A to 0x0C80. Mandatory Range: 0x000A to 0x0C80 Time = N * 10 msec Time Range: 100 msec to 32 seconds

struct esp_ble_pkt_data_length_params_t
BLE pkt date length keys.

Public Members

uint16_t **rx_len**
pkt rx data length value

uint16_t **tx_len**
pkt tx data length value

struct esp_ble_penc_keys_t
BLE encryption keys.

Public Members

esp_bt_octet16_t **ltk**
The long term key

esp_bt_octet8_t **rand**
The random number

uint16_t **ediv**
The ediv value

uint8_t **sec_level**
The security level of the security link

uint8_t **key_size**
The key size(7~16) of the security link

struct esp_ble_pcsrk_keys_t

BLE CSRK keys.

Public Members

uint32_t **counter**

The counter

esp_bt_octet16_t **csrk**

The csrk key

uint8_t **sec_level**

The security level

struct esp_ble_pid_keys_t

BLE pid keys.

Public Members

esp_bt_octet16_t **irk**

The irk value

esp_ble_addr_type_t **addr_type**

The address type

esp_bd_addr_t **static_addr**

The static address

struct esp_ble_lenc_keys_t

BLE Encryption reproduction keys.

Public Members

esp_bt_octet16_t **ltk**

The long term key

uint16_t **div**

The div value

uint8_t **key_size**

The key size of the security link

uint8_t **sec_level**

The security level of the security link

struct esp_ble_lcsrk_keys

BLE SRK keys.

Public Members

uint32_t **counter**

The counter value

uint16_t **div**

The div value

uint8_t **sec_level**

The security level of the security link

esp_bt_octet16_t **csrk**

The csrk key value

struct esp_ble_sec_key_notif_t

Structure associated with ESP_KEY_NOTIF_EVT.

Public Members

esp_bd_addr_t **bd_addr**

peer address

uint32_t **passkey**

the numeric value for comparison. If just_works, do not show this number to UI

struct esp_ble_sec_req_t

Structure of the security request.

Public Members

esp_bd_addr_t **bd_addr**

peer address

struct esp_ble_bond_key_info_t

struct type of the bond key information value

Public Members

esp_ble_key_mask_t **key_mask**

the key mask to indicate witch key is present

esp_ble_penc_keys_t **penc_key**

received peer encryption key

esp_ble_pcsrk_keys_t **pcsrk_key**

received peer device SRK

esp_ble_pid_keys_t **pid_key**
peer device ID key

struct esp_ble_bond_dev_t
struct type of the bond device value

Public Members

esp_bd_addr_t **bd_addr**
peer address

esp_ble_bond_key_info_t **bond_key**
the bond key information

struct esp_ble_key_t
union type of the security key value

Public Members

esp_bd_addr_t **bd_addr**
peer address

esp_ble_key_type_t **key_type**
key type of the security link

esp_ble_key_value_t **p_key_value**
the pointer to the key value

struct esp_ble_local_id_keys_t
structure type of the ble local id keys value

Public Members

esp_bt_octet16_t **ir**
the 16 bits of the ir value

esp_bt_octet16_t **irk**
the 16 bits of the ir key value

esp_bt_octet16_t **dhk**
the 16 bits of the dh key value

struct esp_ble_auth_cmpl_t
Structure associated with ESP_AUTH_CMPL_EVT.

Public Members

esp_bd_addr_t **bd_addr**

BD address peer device.

bool **key_present**

Valid link key value in key element

esp_link_key **key**

Link key associated with peer device.

uint8_t **key_type**

The type of Link Key

bool **success**

TRUE of authentication succeeded, FALSE if failed.

uint8_t **fail_reason**

The HCI reason/error code for when success=FALSE

esp_ble_addr_type_t **addr_type**

Peer device address type

esp_bt_dev_type_t **dev_type**

Device type

esp_ble_auth_req_t **auth_mode**

authentication mode

Macros

ESP_BLE_ADV_FLAG_LIMIT_DISC

BLE_ADV_DATA_FLAG data flag bit definition used for advertising data flag

ESP_BLE_ADV_FLAG_GEN_DISC

ESP_BLE_ADV_FLAG_BREDR_NOT_SPT

ESP_BLE_ADV_FLAG_DMT_CONTROLLER_SPT

ESP_BLE_ADV_FLAG_DMT_HOST_SPT

ESP_BLE_ADV_FLAG_NON_LIMIT_DISC

ESP_LE_KEY_NONE

ESP_LE_KEY_PENC

ESP_LE_KEY_PID

ESP_LE_KEY_PCSRK

ESP_LE_KEY_PLK

ESP_LE_KEY_LLK

ESP_LE_KEY_LENC

ESP_LE_KEY_LID

ESP_LE_KEY_LCSRK

ESP_LE_AUTH_NO_BOND

ESP_LE_AUTH_BOND

ESP_LE_AUTH_REQ_MITM

ESP_LE_AUTH_REQ_BOND_MITM
0101

ESP_LE_AUTH_REQ_SC_ONLY

ESP_LE_AUTH_REQ_SC_BOND

ESP_LE_AUTH_REQ_SC_MITM

ESP_LE_AUTH_REQ_SC_MITM_BOND

ESP_BLE_ONLY_ACCEPT_SPECIFIED_AUTH_DISABLE

ESP_BLE_ONLY_ACCEPT_SPECIFIED_AUTH_ENABLE

ESP_BLE_OOB_DISABLE

ESP_BLE_OOB_ENABLE

ESP_IO_CAP_OUT

ESP_IO_CAP_IO

ESP_IO_CAP_IN

ESP_IO_CAP_NONE

ESP_IO_CAP_KBDISP

ESP_BLE_APPEARANCE_UNKNOWN

ESP_BLE_APPEARANCE_GENERIC_PHONE

ESP_BLE_APPEARANCE_GENERIC_COMPUTER

ESP_BLE_APPEARANCE_GENERIC_WATCH

ESP_BLE_APPEARANCE_SPORTS_WATCH

ESP_BLE_APPEARANCE_GENERIC_CLOCK

ESP_BLE_APPEARANCE_GENERIC_DISPLAY

ESP_BLE_APPEARANCE_GENERIC_REMOTE

ESP_BLE_APPEARANCE_GENERIC_EYEGLASSES

ESP_BLE_APPEARANCE_GENERIC_TAG

ESP_BLE_APPEARANCE_GENERIC_KEYRING

ESP_BLE_APPEARANCE_GENERIC_MEDIA_PLAYER

ESP_BLE_APPEARANCE_GENERIC_BARCODE_SCANNER

ESP_BLE_APPEARANCE_GENERIC_THERMOMETER

ESP_BLE_APPEARANCE_THERMOMETER_EAR

ESP_BLE_APPEARANCE_GENERIC_HEART_RATE

ESP_BLE_APPEARANCE_HEART_RATE_BELT

ESP_BLE_APPEARANCE_GENERIC_BLOOD_PRESSURE

ESP_BLE_APPEARANCE_BLOOD_PRESSURE_ARM

ESP_BLE_APPEARANCE_BLOOD_PRESSURE_WRIST

ESP_BLE_APPEARANCE_GENERIC_HID

ESP_BLE_APPEARANCE_HID_KEYBOARD

ESP_BLE_APPEARANCE_HID_MOUSE

ESP_BLE_APPEARANCE_HID_JOYSTICK

ESP_BLE_APPEARANCE_HID_GAMEPAD

ESP_BLE_APPEARANCE_HID_DIGITIZER_TABLET

ESP_BLE_APPEARANCE_HID_CARD_READER

ESP_BLE_APPEARANCE_HID_DIGITAL_PEN

ESP_BLE_APPEARANCE_HID_BARCODE_SCANNER

ESP_BLE_APPEARANCE_GENERIC_GLUCOSE

ESP_BLE_APPEARANCE_GENERIC_WALKING

ESP_BLE_APPEARANCE_WALKING_IN_SHOE

ESP_BLE_APPEARANCE_WALKING_ON_SHOE

ESP_BLE_APPEARANCE_WALKING_ON_HIP

ESP_BLE_APPEARANCE_GENERIC_CYCLING

ESP_BLE_APPEARANCE_CYCLING_COMPUTER

ESP_BLE_APPEARANCE_CYCLING_SPEED

ESP_BLE_APPEARANCE_CYCLING_CADENCE

ESP_BLE_APPEARANCE_CYCLING_POWER

ESP_BLE_APPEARANCE_CYCLING_SPEED_CADENCE

ESP_BLE_APPEARANCE_GENERIC_PULSE_OXIMETER

ESP_BLE_APPEARANCE_PULSE_OXIMETER_FINGERTIP

ESP_BLE_APPEARANCE_PULSE_OXIMETER_WRIST

ESP_BLE_APPEARANCE_GENERIC_WEIGHT

ESP_BLE_APPEARANCE_GENERIC_PERSONAL_MOBILITY_DEVICE

ESP_BLE_APPEARANCE_POWERED_WHEELCHAIR

ESP_BLE_APPEARANCE_MOBILITY_SCOOTER

ESP_BLE_APPEARANCE_GENERIC_CONTINUOUS_GLUCOSE_MONITOR

ESP_BLE_APPEARANCE_GENERIC_INSULIN_PUMP

ESP_BLE_APPEARANCE_INSULIN_PUMP_DURABLE_PUMP

ESP_BLE_APPEARANCE_INSULIN_PUMP_PATCH_PUMP

ESP_BLE_APPEARANCE_INSULIN_PEN

ESP_BLE_APPEARANCE_GENERIC_MEDICATION_DELIVERY

ESP_BLE_APPEARANCE_GENERIC_OUTDOOR_SPORTS

ESP_BLE_APPEARANCE_OUTDOOR_SPORTS_LOCATION

ESP_BLE_APPEARANCE_OUTDOOR_SPORTS_LOCATION_AND_NAV

ESP_BLE_APPEARANCE_OUTDOOR_SPORTS_LOCATION_POD

ESP_BLE_APPEARANCE_OUTDOOR_SPORTS_LOCATION_POD_AND_NAV

ESP_GAP_BLE_ADD_WHITELIST_COMPLETE_EVT
: This is the old name, just for backwards compatibility.

ESP_BLE_ADV_DATA_LEN_MAX
: Advertising data maximum length.

ESP_BLE_SCAN_RSP_DATA_LEN_MAX
: Scan response data maximum length.

BLE_BIT(n)

Type Definitions

typedef uint8_t esp_ble_key_type_t

typedef uint8_t **esp_ble_auth_req_t**

combination of the above bit pattern

typedef uint8_t **esp_ble_io_cap_t**

combination of the io capability

typedef uint8_t **esp_duplicate_info_t**[ESP_BD_ADDR_LEN]

typedef void (***esp_gap_ble_cb_t**)(*esp_gap_ble_cb_event_t* event, *esp_ble_gap_cb_param_t* *param)

GAP callback function type.

Parameters

- `event`: : Event type
- `param`: : Point to callback parameter, currently is union type

Enumerations

enum **esp_gap_ble_cb_event_t**

GAP BLE callback event type.

Values:

ESP_GAP_BLE_ADV_DATA_SET_COMPLETE_EVT = 0

When advertising data set complete, the event comes

ESP_GAP_BLE_SCAN_RSP_DATA_SET_COMPLETE_EVT

When scan response data set complete, the event comes

ESP_GAP_BLE_SCAN_PARAM_SET_COMPLETE_EVT

When scan parameters set complete, the event comes

ESP_GAP_BLE_SCAN_RESULT_EVT

When one scan result ready, the event comes each time

ESP_GAP_BLE_ADV_DATA_RAW_SET_COMPLETE_EVT

When raw advertising data set complete, the event comes

ESP_GAP_BLE_SCAN_RSP_DATA_RAW_SET_COMPLETE_EVT

When raw advertising data set complete, the event comes

ESP_GAP_BLE_ADV_START_COMPLETE_EVT

When start advertising complete, the event comes

ESP_GAP_BLE_SCAN_START_COMPLETE_EVT

When start scan complete, the event comes

ESP_GAP_BLE_AUTH_CMPL_EVT

ESP_GAP_BLE_KEY_EVT

ESP_GAP_BLE_SEC_REQ_EVT

ESP_GAP_BLE_PASSKEY_NOTIF_EVT

ESP_GAP_BLE_PASSKEY_REQ_EVT

ESP_GAP_BLE_OOB_REQ_EVT

ESP_GAP_BLE_LOCAL_IR_EVT

ESP_GAP_BLE_LOCAL_ER_EVT

ESP_GAP_BLE_NC_REQ_EVT

ESP_GAP_BLE_ADV_STOP_COMPLETE_EVT
When stop adv complete, the event comes

ESP_GAP_BLE_SCAN_STOP_COMPLETE_EVT
When stop scan complete, the event comes

ESP_GAP_BLE_SET_STATIC_RAND_ADDR_EVT
When set the static rand address complete, the event comes

ESP_GAP_BLE_UPDATE_CONN_PARAMS_EVT
When update connection parameters complete, the event comes

ESP_GAP_BLE_SET_PKT_LENGTH_COMPLETE_EVT
When set pkt length complete, the event comes

ESP_GAP_BLE_SET_LOCAL_PRIVACY_COMPLETE_EVT
When Enable/disable privacy on the local device complete, the event comes

ESP_GAP_BLE_REMOVE_BOND_DEV_COMPLETE_EVT
When remove the bond device complete, the event comes

ESP_GAP_BLE_CLEAR_BOND_DEV_COMPLETE_EVT
When clear the bond device clear complete, the event comes

ESP_GAP_BLE_GET_BOND_DEV_COMPLETE_EVT
When get the bond device list complete, the event comes

ESP_GAP_BLE_READ_RSSI_COMPLETE_EVT
When read the rssi complete, the event comes

ESP_GAP_BLE_UPDATE_WHITELIST_COMPLETE_EVT
When add or remove whitelist complete, the event comes

ESP_GAP_BLE_UPDATE_DUPLICATE_EXCEPTIONAL_LIST_COMPLETE_EVT
When update duplicate exceptional list complete, the event comes

ESP_GAP_BLE_EVT_MAX

enum esp_ble_adv_data_type
The type of advertising data(not adv_type)

Values:

ESP_BLE_AD_TYPE_FLAG = 0x01

ESP_BLE_AD_TYPE_16SRV_PART = 0x02

ESP_BLE_AD_TYPE_16SRV_CMPL = 0x03

ESP_BLE_AD_TYPE_32SRV_PART = 0x04

ESP_BLE_AD_TYPE_32SRV_CMPL = 0x05

ESP_BLE_AD_TYPE_128SRV_PART = 0x06

ESP_BLE_AD_TYPE_128SRV_CMPL = 0x07

ESP_BLE_AD_TYPE_NAME_SHORT = 0x08

ESP_BLE_AD_TYPE_NAME_CMPL = 0x09

ESP_BLE_AD_TYPE_TX_PWR = 0x0A

ESP_BLE_AD_TYPE_DEV_CLASS = 0x0D

ESP_BLE_AD_TYPE_SM_TK = 0x10

ESP_BLE_AD_TYPE_SM_OOB_FLAG = 0x11

ESP_BLE_AD_TYPE_INT_RANGE = 0x12

ESP_BLE_AD_TYPE_SOL_SRV_UUID = 0x14

ESP_BLE_AD_TYPE_128SOL_SRV_UUID = 0x15

ESP_BLE_AD_TYPE_SERVICE_DATA = 0x16

ESP_BLE_AD_TYPE_PUBLIC_TARGET = 0x17

ESP_BLE_AD_TYPE_RANDOM_TARGET = 0x18

ESP_BLE_AD_TYPE_APPEARANCE = 0x19

ESP_BLE_AD_TYPE_ADV_INT = 0x1A

ESP_BLE_AD_TYPE_LE_DEV_ADDR = 0x1b

ESP_BLE_AD_TYPE_LE_ROLE = 0x1c

ESP_BLE_AD_TYPE_SPAIR_C256 = 0x1d

ESP_BLE_AD_TYPE_SPAIR_R256 = 0x1e

ESP_BLE_AD_TYPE_32SOL_SRV_UUID = 0x1f

ESP_BLE_AD_TYPE_32SERVICE_DATA = 0x20

ESP_BLE_AD_TYPE_128SERVICE_DATA = 0x21

ESP_BLE_AD_TYPE_LE_SECURE_CONFIRM = 0x22

ESP_BLE_AD_TYPE_LE_SECURE_RANDOM = 0x23

ESP_BLE_AD_TYPE_URI = 0x24

ESP_BLE_AD_TYPE_INDOOR_POSITION = 0x25

ESP_BLE_AD_TYPE_TRANS_DISC_DATA = 0x26

ESP_BLE_AD_TYPE_LE_SUPPORT_FEATURE = 0x27

ESP_BLE_AD_TYPE_CHAN_MAP_UPDATE = 0x28

ESP_BLE_AD_MANUFACTURER_SPECIFIC_TYPE = 0xFF

enum esp_ble_adv_type_t

Advertising mode.

Values:

ADV_TYPE_IND = 0x00

ADV_TYPE_DIRECT_IND_HIGH = 0x01

ADV_TYPE_SCAN_IND = 0x02

ADV_TYPE_NONCONN_IND = 0x03

ADV_TYPE_DIRECT_IND_LOW = 0x04

enum esp_ble_adv_channel_t

Advertising channel mask.

Values:

ADV_CHNL_37 = 0x01

ADV_CHNL_38 = 0x02

ADV_CHNL_39 = 0x04

ADV_CHNL_ALL = 0x07

enum esp_ble_adv_filter_t

Values:

ADV_FILTER_ALLOW_SCAN_ANY_CON_ANY = 0x00

Allow both scan and connection requests from anyone.

ADV_FILTER_ALLOW_SCAN_WLST_CON_ANY

Allow both scan req from White List devices only and connection req from anyone.

ADV_FILTER_ALLOW_SCAN_ANY_CON_WLST

Allow both scan req from anyone and connection req from White List devices only.

ADV_FILTER_ALLOW_SCAN_WLST_CON_WLST

Allow scan and connection requests from White List devices only.

enum esp_ble_sec_act_t

Values:

ESP_BLE_SEC_ENCRYPT = 1

ESP_BLE_SEC_ENCRYPT_NO_MITM

ESP_BLE_SEC_ENCRYPT_MITM

enum esp_ble_sm_param_t

Values:

ESP_BLE_SM_PASSKEY = 0

ESP_BLE_SM_AUTHEN_REQ_MODE

ESP_BLE_SM_IOCAP_MODE

ESP_BLE_SM_SET_INIT_KEY

ESP_BLE_SM_SET_RSP_KEY

ESP_BLE_SM_MAX_KEY_SIZE

ESP_BLE_SM_MIN_KEY_SIZE

ESP_BLE_SM_SET_STATIC_PASSKEY

ESP_BLE_SM_CLEAR_STATIC_PASSKEY

ESP_BLE_SM_ONLY_ACCEPT_SPECIFIED_SEC_AUTH

ESP_BLE_SM_OOB_SUPPORT

ESP_BLE_APP_ENC_KEY_SIZE

ESP_BLE_SM_MAX_PARAM

enum esp_ble_scan_type_t

Ble scan type.

Values:

BLE_SCAN_TYPE_PASSIVE = 0x0

Passive scan

BLE_SCAN_TYPE_ACTIVE = 0x1

Active scan

enum esp_ble_scan_filter_t

Ble scan filter type.

Values:

BLE_SCAN_FILTER_ALLOW_ALL = 0x0

Accept all :

1. advertisement packets except directed advertising packets not addressed to this device (default).

BLE_SCAN_FILTER_ALLOW_ONLY_WLST = 0x1

Accept only :

1. advertisement packets from devices where the advertiser' s address is in the White list.
2. Directed advertising packets which are not addressed for this device shall be ignored.

BLE_SCAN_FILTER_ALLOW_UND_RPA_DIR = 0x2

Accept all :

1. undirected advertisement packets, and
2. directed advertising packets where the initiator address is a resolvable private address, and
3. directed advertising packets addressed to this device.

BLE_SCAN_FILTER_ALLOW_WLIST_PRA_DIR = 0x3

Accept all :

1. advertisement packets from devices where the advertiser' s address is in the White list, and
2. directed advertising packets where the initiator address is a resolvable private address, and
3. directed advertising packets addressed to this device.

enum esp_ble_scan_duplicate_t

Ble scan duplicate type.

Values:

BLE_SCAN_DUPLICATE_DISABLE = 0x0

the Link Layer should generate advertising reports to the host for each packet received

BLE_SCAN_DUPLICATE_ENABLE = 0x1

the Link Layer should filter out duplicate advertising reports to the Host

BLE_SCAN_DUPLICATE_MAX = 0x2

0x02 – 0xFF, Reserved for future use

enum esp_gap_search_evt_t

Sub Event of ESP_GAP_BLE_SCAN_RESULT_EVT.

Values:

ESP_GAP_SEARCH_INQ_RES_EVT = 0

Inquiry result for a peer device.

ESP_GAP_SEARCH_INQ_CMPL_EVT = 1

Inquiry complete.

`ESP_GAP_SEARCH_DISC_RES_EVT` = 2

Discovery result for a peer device.

`ESP_GAP_SEARCH_DISC_BLE_RES_EVT` = 3

Discovery result for BLE GATT based service on a peer device.

`ESP_GAP_SEARCH_DISC_CMPL_EVT` = 4

Discovery complete.

`ESP_GAP_SEARCH_DI_DISC_CMPL_EVT` = 5

Discovery complete.

`ESP_GAP_SEARCH_SEARCH_CANCEL_CMPL_EVT` = 6

Search cancelled

`ESP_GAP_SEARCH_INQ_DISCARD_NUM_EVT` = 7

The number of pkt discarded by flow control

enum esp_ble_evt_type_t

Ble scan result event type, to indicate the result is scan response or advertising data or other.

Values:

`ESP_BLE_EVT_CONN_ADV` = 0x00

Connectable undirected advertising (ADV_IND)

`ESP_BLE_EVT_CONN_DIR_ADV` = 0x01

Connectable directed advertising (ADV_DIRECT_IND)

`ESP_BLE_EVT_DISC_ADV` = 0x02

Scannable undirected advertising (ADV_SCAN_IND)

`ESP_BLE_EVT_NON_CONN_ADV` = 0x03

Non connectable undirected advertising (ADV_NONCONN_IND)

`ESP_BLE_EVT_SCAN_RSP` = 0x04

Scan Response (SCAN_RSP)

enum esp_ble_wl_opration_t

Values:

`ESP_BLE_WHITELIST_REMOVE` = 0X00

remove mac from whitelist

`ESP_BLE_WHITELIST_ADD` = 0X01

add address to whitelist

enum esp_bt_duplicate_exceptional_subcode_type_t

Values:

`ESP_BLE_DUPLICATE_EXCEPTIONAL_LIST_ADD` = 0

Add device info into duplicate scan exceptional list

`ESP_BLE_DUPLICATE_EXCEPTIONAL_LIST_REMOVE`
Remove device info from duplicate scan exceptional list

`ESP_BLE_DUPLICATE_EXCEPTIONAL_LIST_CLEAN`
Clean duplicate scan exceptional list

enum esp_ble_duplicate_exceptional_info_type_t
Values:

`ESP_BLE_DUPLICATE_SCAN_EXCEPTIONAL_INFO_ADV_ADDR` = 0
BLE advertising address , device info will be added into ESP_BLE_DUPLICATE_SCAN_EXCEPTIONAL_ADDR_LIST

`ESP_BLE_DUPLICATE_SCAN_EXCEPTIONAL_INFO_MESH_LINK_ID`
BLE mesh link ID, it is for BLE mesh, device info will be added into ESP_BLE_DUPLICATE_SCAN_EXCEPTIONAL_MESH_LINK_ID_LIST

`ESP_BLE_DUPLICATE_SCAN_EXCEPTIONAL_INFO_MESH_BEACON_TYPE`
BLE mesh beacon AD type, the format is | Len | 0x2B | Beacon Type | Beacon Data |

`ESP_BLE_DUPLICATE_SCAN_EXCEPTIONAL_INFO_MESH_PROV_SRV_ADV`
BLE mesh provisioning service uuid, the format is | 0x02 | 0x01 | flags | 0x03 | 0x03 | 0x1827 | ··· . |‘

`ESP_BLE_DUPLICATE_SCAN_EXCEPTIONAL_INFO_MESH_PROXY_SRV_ADV`
BLE mesh adv with proxy service uuid, the format is | 0x02 | 0x01 | flags | 0x03 | 0x03 | 0x1828 | ···. |‘

enum esp_duplicate_scan_exceptional_list_type_t
Values:

`ESP_BLE_DUPLICATE_SCAN_EXCEPTIONAL_ADDR_LIST` = BLE_BIT(0)
duplicate scan exceptional addr list

`ESP_BLE_DUPLICATE_SCAN_EXCEPTIONAL_MESH_LINK_ID_LIST` = BLE_BIT(1)
duplicate scan exceptional mesh link ID list

`ESP_BLE_DUPLICATE_SCAN_EXCEPTIONAL_MESH_BEACON_TYPE_LIST` = BLE_BIT(2)
duplicate scan exceptional mesh beacon type list

`ESP_BLE_DUPLICATE_SCAN_EXCEPTIONAL_MESH_PROV_SRV_ADV_LIST` = BLE_BIT(3)
duplicate scan exceptional mesh adv with provisioning service uuid

`ESP_BLE_DUPLICATE_SCAN_EXCEPTIONAL_MESH_PROXY_SRV_ADV_LIST` = BLE_BIT(4)
duplicate scan exceptional mesh adv with provisioning service uuid

`ESP_BLE_DUPLICATE_SCAN_EXCEPTIONAL_ALL_LIST` = 0xFFFF
duplicate scan exceptional all list

GATT DEFINES

Overview

Instructions

Application Example

Instructions

API Reference

Header File

- bt/bluedroid/api/include/api/esp_gatt_defs.h

Unions

union esp_gatt_rsp_t

#include <esp_gatt_defs.h> GATT remote read request response type.

Public Members

esp_gatt_value_t **attr_value**

Gatt attribute structure

uint16_t **handle**

Gatt attribute handle

Structures

struct esp_gatt_id_t

Gatt id, include uuid and instance id.

Public Members

esp_bt_uuid_t **uuid**

UUID

uint8_t **inst_id**

Instance id

struct esp_gatt_srvc_id_t

Gatt service id, include id (uuid and instance id) and primary flag.

Public Members

esp_gatt_id_t **id**

Gatt id, include uuid and instance

bool **is_primary**

This service is primary or not

struct esp_attr_desc_t

Attribute description (used to create database)

Public Members

uint16_t **uuid_length**

UUID length

uint8_t ***uuid_p**

UUID value

uint16_t **perm**

Attribute permission

uint16_t **max_length**

Maximum length of the element

uint16_t **length**

Current length of the element

uint8_t ***value**

Element value array

struct esp_attr_control_t

attribute auto response flag

Public Members

uint8_t **auto_rsp**

if auto_rsp set to ESP_GATT_RSP_BY_APP, means the response of Write/Read operation will by replied by application. if auto_rsp set to ESP_GATT_AUTO_RSP, means the response of Write/Read operation will be replied by GATT stack automatically.

struct esp_gatts_attr_db_t

attribute type added to the gatt server database

Public Members

esp_attr_control_t **attr_control**
The attribute control type

esp_attr_desc_t **att_desc**
The attribute type

struct esp_attr_value_t
set the attribute value type

Public Members

uint16_t **attr_max_len**
attribute max value length

uint16_t **attr_len**
attribute current value length

uint8_t ***attr_value**
the pointer to attribute value

struct esp_gatts_incl_svc_desc_t
Gatt include service entry element.

Public Members

uint16_t **start_hdl**
Gatt start handle value of included service

uint16_t **end_hdl**
Gatt end handle value of included service

uint16_t **uuid**
Gatt attribute value UUID of included service

struct esp_gatts_incl128_svc_desc_t
Gatt include 128 bit service entry element.

Public Members

uint16_t **start_hdl**
Gatt start handle value of included 128 bit service

uint16_t **end_hdl**
Gatt end handle value of included 128 bit service

struct esp_gatt_value_t

Gatt attribute value.

Public Members

uint8_t **value**[**ESP_GATT_MAX_ATTR_LEN**]

Gatt attribute value

uint16_t **handle**

Gatt attribute handle

uint16_t **offset**

Gatt attribute value offset

uint16_t **len**

Gatt attribute value length

uint8_t **auth_req**

Gatt authentication request

struct esp_gattc_multi_t

read multiple attribute

Public Members

uint8_t **num_attr**

The number of the attribute

uint16_t **handles**[**ESP_GATT_MAX_READ_MULTI_HANDLES**]

The handles list

struct esp_gattc_db_elem_t

data base attribute element

Public Members

esp_gatt_db_attr_type_t **type**

The attribute type

uint16_t **attribute_handle**

The attribute handle, it' s valid for all of the type

uint16_t **start_handle**

The service start handle, it' s valid only when the type = ESP_GATT_DB_PRIMARY_SERVICE or ESP_GATT_DB_SECONDARY_SERVICE

uint16_t **end_handle**

The service end handle, it's valid only when the type = ESP_GATT_DB_PRIMARY_SERVICE or ESP_GATT_DB_SECONDARY_SERVICE

esp_gatt_char_prop_t **properties**

The characteristic properties, it's valid only when the type = ESP_GATT_DB_CHARACTERISTIC

esp_bt_uuid_t **uuid**

The attribute uuid, it's valid for all of the type

struct esp_gattc_service_elem_t

service element

Public Members

bool **is_primary**

The service flag, true if the service is primary service, else is secondary service

uint16_t **start_handle**

The start handle of the service

uint16_t **end_handle**

The end handle of the service

esp_bt_uuid_t **uuid**

The uuid of the service

struct esp_gattc_char_elem_t

characteristic element

Public Members

uint16_t **char_handle**

The characteristic handle

esp_gatt_char_prop_t **properties**

The characteristic properties

esp_bt_uuid_t **uuid**

The characteristic uuid

struct esp_gattc_descr_elem_t

descriptor element

Public Members

uint16_t **handle**
The characteristic descriptor handle

esp_bt_uuid_t **uuid**
The characteristic descriptor uuid

struct esp_gattc_incl_svc_elem_t
include service element

Public Members

uint16_t **handle**
The include service current attribute handle

uint16_t **incl_srvc_s_handle**
The start handle of the service which has been included

uint16_t **incl_srvc_e_handle**
The end handle of the service which has been included

esp_bt_uuid_t **uuid**
The include service uuid

Macros

ESP_GATT_UUID_IMMEDIATE_ALERT_SVC
All "ESP_GATT_UUID_xxx" is attribute types

ESP_GATT_UUID_LINK_LOSS_SVC

ESP_GATT_UUID_TX_POWER_SVC

ESP_GATT_UUID_CURRENT_TIME_SVC

ESP_GATT_UUID_REF_TIME_UPDATE_SVC

ESP_GATT_UUID_NEXT_DST_CHANGE_SVC

ESP_GATT_UUID_GLUCOSE_SVC

ESP_GATT_UUID_HEALTH_THERMOM_SVC

ESP_GATT_UUID_DEVICE_INFO_SVC

ESP_GATT_UUID_HEART_RATE_SVC

ESP_GATT_UUID_PHONE_ALERT_STATUS_SVC

ESP_GATT_UUID_BATTERY_SERVICE_SVC

ESP_GATT_UUID_BLOOD_PRESSURE_SVC

ESP_GATT_UUID_ALERT_NTF_SVC

ESP_GATT_UUID_HID_SVC

ESP_GATT_UUID_SCAN_PARAMETERS_SVC

ESP_GATT_UUID_RUNNING_SPEED_CADENCE_SVC

ESP_GATT_UUID_CYCLING_SPEED_CADENCE_SVC

ESP_GATT_UUID_CYCLING_POWER_SVC

ESP_GATT_UUID_LOCATION_AND_NAVIGATION_SVC

ESP_GATT_UUID_USER_DATA_SVC

ESP_GATT_UUID_WEIGHT_SCALE_SVC

ESP_GATT_UUID_PRI_SERVICE

ESP_GATT_UUID_SEC_SERVICE

ESP_GATT_UUID_INCLUDE_SERVICE

ESP_GATT_UUID_CHAR_DECLARE

ESP_GATT_UUID_CHAR_EXT_PROP

ESP_GATT_UUID_CHAR_DESCRIPTION

ESP_GATT_UUID_CHAR_CLIENT_CONFIG

ESP_GATT_UUID_CHAR_SRVR_CONFIG

ESP_GATT_UUID_CHAR_PRESENT_FORMAT

ESP_GATT_UUID_CHAR_AGG_FORMAT

ESP_GATT_UUID_CHAR_VALID_RANGE

ESP_GATT_UUID_EXT_RPT_REF_DESCR

ESP_GATT_UUID_RPT_REF_DESCR

ESP_GATT_UUID_NUM_DIGITALS_DESCR

ESP_GATT_UUID_VALUE_TRIGGER_DESCR

ESP_GATT_UUID_ENV_SENSING_CONFIG_DESCR

ESP_GATT_UUID_ENV_SENSING_MEASUREMENT_DESCR

ESP_GATT_UUID_ENV_SENSING_TRIGGER_DESCR

ESP_GATT_UUID_TIME_TRIGGER_DESCR

ESP_GATT_UUID_GAP_DEVICE_NAME

ESP_GATT_UUID_GAP_ICON

ESP_GATT_UUID_GAP_PREF_CONN_PARAM

ESP_GATT_UUID_GAP_CENTRAL_ADDR_RESOL

ESP_GATT_UUID_GATT_SRV_CHGD

ESP_GATT_UUID_ALERT_LEVEL

ESP_GATT_UUID_TX_POWER_LEVEL

ESP_GATT_UUID_CURRENT_TIME

ESP_GATT_UUID_LOCAL_TIME_INFO

ESP_GATT_UUID_REF_TIME_INFO

ESP_GATT_UUID_NW_STATUS

ESP_GATT_UUID_NW_TRIGGER

ESP_GATT_UUID_ALERT_STATUS

ESP_GATT_UUID_RINGER_CP

ESP_GATT_UUID_RINGER_SETTING

ESP_GATT_UUID_GM_MEASUREMENT

ESP_GATT_UUID_GM_CONTEXT

ESP_GATT_UUID_GM_CONTROL_POINT

ESP_GATT_UUID_GM_FEATURE

ESP_GATT_UUID_SYSTEM_ID

ESP_GATT_UUID_MODEL_NUMBER_STR

ESP_GATT_UUID_SERIAL_NUMBER_STR

ESP_GATT_UUID_FW_VERSION_STR

ESP_GATT_UUID_HW_VERSION_STR

ESP_GATT_UUID_SW_VERSION_STR

ESP_GATT_UUID_MANU_NAME

ESP_GATT_UUID_IEEE_DATA

ESP_GATT_UUID_PNP_ID

ESP_GATT_UUID_HID_INFORMATION

ESP_GATT_UUID_HID_REPORT_MAP

ESP_GATT_UUID_HID_CONTROL_POINT

ESP_GATT_UUID_HID_REPORT

ESP_GATT_UUID_HID_PROTO_MODE

ESP_GATT_UUID_HID_BT_KB_INPUT

ESP_GATT_UUID_HID_BT_KB_OUTPUT

ESP_GATT_UUID_HID_BT_MOUSE_INPUT

ESP_GATT_HEART_RATE_MEAS
: Heart Rate Measurement.

ESP_GATT_BODY_SENSOR_LOCATION
: Body Sensor Location.

ESP_GATT_HEART_RATE_CNTL_POINT
: Heart Rate Control Point.

ESP_GATT_UUID_BATTERY_LEVEL

ESP_GATT_UUID_SC_CONTROL_POINT

ESP_GATT_UUID_SENSOR_LOCATION

ESP_GATT_UUID_RSC_MEASUREMENT

ESP_GATT_UUID_RSC_FEATURE

ESP_GATT_UUID_CSC_MEASUREMENT

ESP_GATT_UUID_CSC_FEATURE

ESP_GATT_UUID_SCAN_INT_WINDOW

ESP_GATT_UUID_SCAN_REFRESH

ESP_GATT_ILLEGAL_UUID
: GATT INVALID UUID.

ESP_GATT_ILLEGAL_HANDLE
: GATT INVALID HANDLE.

ESP_GATT_ATTR_HANDLE_MAX
: GATT attribute max handle.

ESP_GATT_MAX_READ_MULTI_HANDLES

ESP_GATT_PERM_READ
: Attribute permissions.

ESP_GATT_PERM_READ_ENCRYPTED

ESP_GATT_PERM_READ_ENC_MITM

ESP_GATT_PERM_WRITE

ESP_GATT_PERM_WRITE_ENCRYPTED

ESP_GATT_PERM_WRITE_ENC_MITM

ESP_GATT_PERM_WRITE_SIGNED

ESP_GATT_PERM_WRITE_SIGNED_MITM

ESP_GATT_PERM_READ_AUTHORIZATION

ESP_GATT_PERM_WRITE_AUTHORIZATION

ESP_GATT_CHAR_PROP_BIT_BROADCAST

ESP_GATT_CHAR_PROP_BIT_READ

ESP_GATT_CHAR_PROP_BIT_WRITE_NR

ESP_GATT_CHAR_PROP_BIT_WRITE

ESP_GATT_CHAR_PROP_BIT_NOTIFY

ESP_GATT_CHAR_PROP_BIT_INDICATE

ESP_GATT_CHAR_PROP_BIT_AUTH

ESP_GATT_CHAR_PROP_BIT_EXT_PROP

ESP_GATT_MAX_ATTR_LEN
: GATT maximum attribute length.

ESP_GATT_RSP_BY_APP

ESP_GATT_AUTO_RSP

ESP_GATT_IF_NONE
: If callback report gattc_if/gatts_if as this macro, means this event is not correspond to any app

Type Definitions

typedef uint16_t **esp_gatt_perm_t**

typedef uint8_t **esp_gatt_char_prop_t**

typedef uint8_t **esp_gatt_if_t**
: Gatt interface type, different application on GATT client use different gatt_if

Enumerations

enum esp_gatt_prep_write_type
: Attribute write data type from the client.

Values:

ESP_GATT_PREP_WRITE_CANCEL = 0x00

Prepare write cancel

ESP_GATT_PREP_WRITE_EXEC = 0x01

Prepare write execute

enum esp_gatt_status_t

GATT success code and error codes.

Values:

ESP_GATT_OK = 0x0

ESP_GATT_INVALID_HANDLE = 0x01

ESP_GATT_READ_NOT_PERMIT = 0x02

ESP_GATT_WRITE_NOT_PERMIT = 0x03

ESP_GATT_INVALID_PDU = 0x04

ESP_GATT_INSUF_AUTHENTICATION = 0x05

ESP_GATT_REQ_NOT_SUPPORTED = 0x06

ESP_GATT_INVALID_OFFSET = 0x07

ESP_GATT_INSUF_AUTHORIZATION = 0x08

ESP_GATT_PREPARE_Q_FULL = 0x09

ESP_GATT_NOT_FOUND = 0x0a

ESP_GATT_NOT_LONG = 0x0b

ESP_GATT_INSUF_KEY_SIZE = 0x0c

ESP_GATT_INVALID_ATTR_LEN = 0x0d

ESP_GATT_ERR_UNLIKELY = 0x0e

ESP_GATT_INSUF_ENCRYPTION = 0x0f

ESP_GATT_UNSUPPORT_GRP_TYPE = 0x10

ESP_GATT_INSUF_RESOURCE = 0x11

ESP_GATT_NO_RESOURCES = 0x80

ESP_GATT_INTERNAL_ERROR = 0x81

ESP_GATT_WRONG_STATE = 0x82

ESP_GATT_DB_FULL = 0x83

ESP_GATT_BUSY = 0x84

ESP_GATT_ERROR = 0x85

ESP_GATT_CMD_STARTED = 0x86

ESP_GATT_ILLEGAL_PARAMETER = 0x87

ESP_GATT_PENDING = 0x88

ESP_GATT_AUTH_FAIL = 0x89

ESP_GATT_MORE = 0x8a

ESP_GATT_INVALID_CFG = 0x8b

ESP_GATT_SERVICE_STARTED = 0x8c

ESP_GATT_ENCRYPED_MITM = ESP_GATT_OK

ESP_GATT_ENCRYPED_NO_MITM = 0x8d

ESP_GATT_NOT_ENCRYPTED = 0x8e

ESP_GATT_CONGESTED = 0x8f

ESP_GATT_DUP_REG = 0x90

ESP_GATT_ALREADY_OPEN = 0x91

ESP_GATT_CANCEL = 0x92

ESP_GATT_STACK_RSP = 0xe0

ESP_GATT_APP_RSP = 0xe1

ESP_GATT_UNKNOWN_ERROR = 0xef

ESP_GATT_CCC_CFG_ERR = 0xfd

ESP_GATT_PRC_IN_PROGRESS = 0xfe

ESP_GATT_OUT_OF_RANGE = 0xff

enum esp_gatt_conn_reason_t

Gatt Connection reason enum.

Values:

ESP_GATT_CONN_UNKNOWN = 0

Gatt connection unknown

ESP_GATT_CONN_L2C_FAILURE = 1

General L2cap failure

ESP_GATT_CONN_TIMEOUT = 0x08

Connection timeout

ESP_GATT_CONN_TERMINATE_PEER_USER = 0x13

Connection terminate by peer user

`ESP_GATT_CONN_TERMINATE_LOCAL_HOST` = 0x16
Connection terminated by local host

`ESP_GATT_CONN_FAIL_ESTABLISH` = 0x3e
Connection fail to establish

`ESP_GATT_CONN_LMP_TIMEOUT` = 0x22
Connection fail for LMP response tout

`ESP_GATT_CONN_CONN_CANCEL` = 0x0100
L2CAP connection cancelled

`ESP_GATT_CONN_NONE` = 0x0101
No connection to cancel

enum esp_gatt_auth_req_t
Gatt authentication request type.

Values:

`ESP_GATT_AUTH_REQ_NONE` = 0

`ESP_GATT_AUTH_REQ_NO_MITM` = 1

`ESP_GATT_AUTH_REQ_MITM` = 2

`ESP_GATT_AUTH_REQ_SIGNED_NO_MITM` = 3

`ESP_GATT_AUTH_REQ_SIGNED_MITM` = 4

enum esp_service_source_t
Values:

`ESP_GATT_SERVICE_FROM_REMOTE_DEVICE` = 0

`ESP_GATT_SERVICE_FROM_NVS_FLASH` = 1

`ESP_GATT_SERVICE_FROM_UNKNOWN` = 2

enum esp_gatt_write_type_t
Gatt write type.

Values:

`ESP_GATT_WRITE_TYPE_NO_RSP` = 1
Gatt write attribute need no response

`ESP_GATT_WRITE_TYPE_RSP`
Gatt write attribute need remote response

enum esp_gatt_db_attr_type_t
the type of attribute element

Values:

`ESP_GATT_DB_PRIMARY_SERVICE`
: Gattc primary service attribute type in the cache

`ESP_GATT_DB_SECONDARY_SERVICE`
: Gattc secondary service attribute type in the cache

`ESP_GATT_DB_CHARACTERISTIC`
: Gattc characteristic attribute type in the cache

`ESP_GATT_DB_DESCRIPTOR`
: Gattc characteristic descriptor attribute type in the cache

`ESP_GATT_DB_INCLUDED_SERVICE`
: Gattc include service attribute type in the cache

`ESP_GATT_DB_ALL`
: Gattc all the attribute (primary service & secondary service & include service & char & descriptor) type in the cache

GATT SERVER API

Overview

Instructions

Application Example

Check bluetooth folder in ESP-IDF examples, which contains the following demos and their tutorials:

- This is a GATT sever demo and its tutorial. This demo creates a GATT service with an attribute table, which releases the user from adding attributes one by one. This is the recommended method of adding attributes.
  - bluetooth/gatt_server_service_table
  - GATT Server Service Table Example Walkthrough
- This is a GATT server demo and its tutorial. This demo creates a GATT service by adding attributes one by one as defined by Bluedroid. The recommended method of adding attributes is presented in example above.
  - bluetooth/gatt_server
  - GATT Server Example Walkthrough
- This is a BLE SPP-Like demo. This demo, which acts as a GATT server, can receive data from UART and then send the data to the peer device automatically.
  - bluetooth/ble_spp_server

API Reference

Header File

- bt/bluedroid/api/include/api/esp_gatts_api.h

Functions

esp_err_t **esp_ble_gatts_register_callback**(*esp_gatts_cb_t callback*)

This function is called to register application callbacks with BTA GATTS module.

Return

- ESP_OK : success
- other : failed

esp_err_t **esp_ble_gatts_app_register**(uint16_t *app_id*)

This function is called to register application identifier.

Return

- ESP_OK : success
- other : failed

esp_err_t **esp_ble_gatts_app_unregister**(*esp_gatt_if_t gatts_if*)

unregister with GATT Server.

Return

- ESP_OK : success
- other : failed

Parameters

- **gatts_if**: GATT server access interface

esp_err_t **esp_ble_gatts_create_service**(*esp_gatt_if_t gatts_if*, *esp_gatt_srvc_id_t* **service_id*, uint16_t *num_handle*)

Create a service. When service creation is done, a callback event BTA_GATTS_CREATE_SRVC_EVT is called to report status and service ID to the profile. The service ID obtained in the callback function needs to be used when adding included service and characteristics/descriptors into the service.

Return

- ESP_OK : success

- other : failed

Parameters

- `gatts_if`: GATT server access interface
- `service_id`: service ID.
- `num_handle`: number of handle requested for this service.

esp_err_t **esp_ble_gatts_create_attr_tab**(const *esp_gatts_attr_db_t* *gatts_attr_db, *esp_gatt_if_t* *gatts_if*, uint8_t *max_nb_attr*, uint8_t *srvc_inst_id*)

Create a service attribute tab.

Return

- ESP_OK : success
- other : failed

Parameters

- `gatts_attr_db`: the pointer to the service attr tab
- `gatts_if`: GATT server access interface
- `max_nb_attr`: the number of attribute to be added to the service database.
- `srvc_inst_id`: the instance id of the service

esp_err_t **esp_ble_gatts_add_included_service**(uint16_t *service_handle*, uint16_t *included_service_handle*)

This function is called to add an included service. This function have to be called between 'esp_ble_gatts_create_service' and 'esp_ble_gatts_add_char' . After included service is included, a callback event BTA_GATTS_ADD_INCL_SRVC_EVT is reported the included service ID.

Return

- ESP_OK : success
- other : failed

Parameters

- `service_handle`: service handle to which this included service is to be added.
- `included_service_handle`: the service ID to be included.

esp_err_t **esp_ble_gatts_add_char**(uint16_t *service_handle*, *esp_bt_uuid_t* *char_uuid, *esp_gatt_perm_t* *perm*, *esp_gatt_char_prop_t* *property*, *esp_attr_value_t* *char_val, *esp_attr_control_t* *control*)

This function is called to add a characteristic into a service.

Return

- ESP_OK : success
- other : failed

Parameters

- `service_handle`: service handle to which this included service is to be added.
- `char_uuid`: : Characteristic UUID.
- `perm`: : Characteristic value declaration attribute permission.
- `property`: : Characteristic Properties
- `char_val`: : Characteristic value
- `control`: : attribute response control byte

esp_err_t **esp_ble_gatts_add_char_descr**(uint16_t *service_handle*, *esp_bt_uuid_t* **descr_uuid*, *esp_gatt_perm_t* *perm*, *esp_attr_value_t* **char_descr_val*, *esp_attr_control_t* **control*)

This function is called to add characteristic descriptor. When it' s done, a callback event BTA_GATTS_ADD_DESCR_EVT is called to report the status and an ID number for this descriptor.

Return

- ESP_OK : success
- other : failed

Parameters

- `service_handle`: service handle to which this characteristic descriptor is to be added.
- `perm`: descriptor access permission.
- `descr_uuid`: descriptor UUID.
- `char_descr_val`: : Characteristic descriptor value
- `control`: : attribute response control byte

esp_err_t **esp_ble_gatts_delete_service**(uint16_t *service_handle*)

This function is called to delete a service. When this is done, a callback event BTA_GATTS_DELETE_EVT is report with the status.

Return

- ESP_OK : success
- other : failed

Parameters

- `service_handle`: service_handle to be deleted.

esp_err_t **esp_ble_gatts_start_service**(uint16_t *service_handle*)

This function is called to start a service.

Return

- ESP_OK : success
- other : failed

Parameters

- `service_handle`: the service handle to be started.

esp_err_t **esp_ble_gatts_stop_service**(uint16_t *service_handle*)

This function is called to stop a service.

Return

- ESP_OK : success
- other : failed

Parameters

- `service_handle`: - service to be topped.

esp_err_t **esp_ble_gatts_send_indicate**(*esp_gatt_if_t gatts_if*, uint16_t *conn_id*, uint16_t *attr_handle*, uint16_t *value_len*, uint8_t **value*, bool *need_confirm*)

Send indicate or notify to GATT client. Set param need_confirm as false will send notification, otherwise indication.

Return

- ESP_OK : success
- other : failed

Parameters

- `gatts_if`: GATT server access interface
- `conn_id`: - connection id to indicate.
- `attr_handle`: - attribute handle to indicate.
- `value_len`: - indicate value length.
- `value`: value to indicate.

- `need_confirm`: - Whether a confirmation is required. false sends a GATT notification, true sends a GATT indication.

esp_err_t **esp_ble_gatts_send_response**(*esp_gatt_if_t gatts_if*, uint16_t *conn_id*, uint32_t *trans_id*, *esp_gatt_status_t status*, *esp_gatt_rsp_t* **rsp*)

This function is called to send a response to a request.

Return

- ESP_OK : success
- other : failed

Parameters

- `gatts_if`: GATT server access interface
- `conn_id`: - connection identifier.
- `trans_id`: - transfer id
- `status`: - response status
- `rsp`: - response data.

esp_err_t **esp_ble_gatts_set_attr_value**(uint16_t *attr_handle*, uint16_t *length*, `const` uint8_t **value*)

This function is called to set the attribute value by the application.

Return

- ESP_OK : success
- other : failed

Parameters

- `attr_handle`: the attribute handle which to be set
- `length`: the value length
- `value`: the pointer to the attribute value

esp_gatt_status_t **esp_ble_gatts_get_attr_value**(uint16_t *attr_handle*, uint16_t **length*, `const` uint8_t ***value*)

Retrieve attribute value.

Return

- ESP_GATT_OK : success
- other : failed

Parameters

- `attr_handle`: Attribute handle.
- `length`: pointer to the attribute value length
- `value`: Pointer to attribute value payload, the value cannot be modified by user

esp_err_t **esp_ble_gatts_open**(*esp_gatt_if_t gatts_if*, *esp_bd_addr_t remote_bda*, bool *is_direct*)

Open a direct open connection or add a background auto connection.

Return

- ESP_OK : success
- other : failed

Parameters

- `gatts_if`: GATT server access interface
- `remote_bda`: remote device bluetooth device address.
- `is_direct`: direct connection or background auto connection

esp_err_t **esp_ble_gatts_close**(*esp_gatt_if_t gatts_if*, uint16_t *conn_id*)

Close a connection a remote device.

Return

- ESP_OK : success
- other : failed

Parameters

- `gatts_if`: GATT server access interface
- `conn_id`: connection ID to be closed.

esp_err_t **esp_ble_gatts_send_service_change_indication**(*esp_gatt_if_t gatts_if*, *esp_bd_addr_t remote_bda*)

Send service change indication.

Return

- ESP_OK : success
- other : failed

Parameters

- `gatts_if`: GATT server access interface
- `remote_bda`: remote device bluetooth device address. If remote_bda is NULL then it will send service change indication to all the connected devices and if not then to a specific device

Unions

union esp_ble_gatts_cb_param_t

#include <esp_gatts_api.h> Gatt server callback parameters union.

Public Members

struct *esp_ble_gatts_cb_param_t*::*gatts_reg_evt_param* **reg**

Gatt server callback param of ESP_GATTS_REG_EVT

struct *esp_ble_gatts_cb_param_t*::*gatts_read_evt_param* **read**

Gatt server callback param of ESP_GATTS_READ_EVT

struct *esp_ble_gatts_cb_param_t*::*gatts_write_evt_param* **write**

Gatt server callback param of ESP_GATTS_WRITE_EVT

struct *esp_ble_gatts_cb_param_t*::*gatts_exec_write_evt_param* **exec_write**

Gatt server callback param of ESP_GATTS_EXEC_WRITE_EVT

struct *esp_ble_gatts_cb_param_t*::*gatts_mtu_evt_param* **mtu**

Gatt server callback param of ESP_GATTS_MTU_EVT

struct *esp_ble_gatts_cb_param_t*::*gatts_conf_evt_param* **conf**

Gatt server callback param of ESP_GATTS_CONF_EVT (confirm)

struct *esp_ble_gatts_cb_param_t*::*gatts_create_evt_param* **create**

Gatt server callback param of ESP_GATTS_CREATE_EVT

struct *esp_ble_gatts_cb_param_t*::*gatts_add_incl_srvc_evt_param* **add_incl_srvc**

Gatt server callback param of ESP_GATTS_ADD_INCL_SRVC_EVT

struct *esp_ble_gatts_cb_param_t*::*gatts_add_char_evt_param* **add_char**

Gatt server callback param of ESP_GATTS_ADD_CHAR_EVT

struct *esp_ble_gatts_cb_param_t*::*gatts_add_char_descr_evt_param* **add_char_descr**

Gatt server callback param of ESP_GATTS_ADD_CHAR_DESCR_EVT

struct *esp_ble_gatts_cb_param_t*::*gatts_delete_evt_param* **del**

Gatt server callback param of ESP_GATTS_DELETE_EVT

struct *esp_ble_gatts_cb_param_t*::*gatts_start_evt_param* **start**

Gatt server callback param of ESP_GATTS_START_EVT

struct *esp_ble_gatts_cb_param_t*::*gatts_stop_evt_param* **stop**

Gatt server callback param of ESP_GATTS_STOP_EVT

struct *esp_ble_gatts_cb_param_t*::*gatts_connect_evt_param* **connect**

Gatt server callback param of ESP_GATTS_CONNECT_EVT

struct *esp_ble_gatts_cb_param_t*::*gatts_disconnect_evt_param* **disconnect**

Gatt server callback param of ESP_GATTS_DISCONNECT_EVT

struct *esp_ble_gatts_cb_param_t*::*gatts_open_evt_param* **open**

Gatt server callback param of ESP_GATTS_OPEN_EVT

struct *esp_ble_gatts_cb_param_t*::*gatts_cancel_open_evt_param* **cancel_open**

Gatt server callback param of ESP_GATTS_CANCEL_OPEN_EVT

struct *esp_ble_gatts_cb_param_t*::*gatts_close_evt_param* **close**

Gatt server callback param of ESP_GATTS_CLOSE_EVT

struct *esp_ble_gatts_cb_param_t*::*gatts_congest_evt_param* **congest**

Gatt server callback param of ESP_GATTS_CONGEST_EVT

struct *esp_ble_gatts_cb_param_t*::*gatts_rsp_evt_param* **rsp**

Gatt server callback param of ESP_GATTS_RESPONSE_EVT

struct *esp_ble_gatts_cb_param_t*::*gatts_add_attr_tab_evt_param* **add_attr_tab**

Gatt server callback param of ESP_GATTS_CREAT_ATTR_TAB_EVT

struct *esp_ble_gatts_cb_param_t*::*gatts_set_attr_val_evt_param* **set_attr_val**

Gatt server callback param of ESP_GATTS_SET_ATTR_VAL_EVT

struct *esp_ble_gatts_cb_param_t*::*gatts_send_service_change_evt_param* **service_change**

Gatt server callback param of ESP_GATTS_SEND_SERVICE_CHANGE_EVT

struct gatts_add_attr_tab_evt_param

#include <esp_gatts_api.h> ESP_GATTS_CREAT_ATTR_TAB_EVT.

Public Members

esp_gatt_status_t **status**

Operation status

esp_bt_uuid_t **svc_uuid**

Service uuid type

uint16_t **num_handle**

The number of the attribute handle to be added to the gatts database

uint16_t ***handles**

The number to the handles

struct gatts_add_char_descr_evt_param

#include <esp_gatts_api.h> ESP_GATTS_ADD_CHAR_DESCR_EVT.

Public Members

esp_gatt_status_t **status**
Operation status

uint16_t **attr_handle**
Descriptor attribute handle

uint16_t **service_handle**
Service attribute handle

esp_bt_uuid_t **descr_uuid**
Characteristic descriptor uuid

struct gatts_add_char_evt_param
#include <esp_gatts_api.h> ESP_GATTS_ADD_CHAR_EVT.

Public Members

esp_gatt_status_t **status**
Operation status

uint16_t **attr_handle**
Characteristic attribute handle

uint16_t **service_handle**
Service attribute handle

esp_bt_uuid_t **char_uuid**
Characteristic uuid

struct gatts_add_incl_srvc_evt_param
#include <esp_gatts_api.h> ESP_GATTS_ADD_INCL_SRVC_EVT.

Public Members

esp_gatt_status_t **status**
Operation status

uint16_t **attr_handle**
Included service attribute handle

uint16_t **service_handle**
Service attribute handle

struct gatts_cancel_open_evt_param
#include <esp_gatts_api.h> ESP_GATTS_CANCEL_OPEN_EVT.

Public Members

esp_gatt_status_t **status**
Operation status

struct gatts_close_evt_param
#include <esp_gatts_api.h> ESP_GATTS_CLOSE_EVT.

Public Members

esp_gatt_status_t **status**
Operation status

uint16_t **conn_id**
Connection id

struct gatts_conf_evt_param
#include <esp_gatts_api.h> ESP_GATTS_CONF_EVT.

Public Members

esp_gatt_status_t **status**
Operation status

uint16_t **conn_id**
Connection id

uint16_t **handle**
attribute handle

uint16_t **len**
The indication or notification value length, len is valid when send notification or indication failed

uint8_t ***value**
The indication or notification value , value is valid when send notification or indication failed

struct gatts_congest_evt_param
#include <esp_gatts_api.h> ESP_GATTS_LISTEN_EVT.

ESP_GATTS_CONGEST_EVT

Public Members

uint16_t **conn_id**
Connection id

bool **congested**

Congested or not

struct gatts_connect_evt_param

#include <esp_gatts_api.h> ESP_GATTS_CONNECT_EVT.

Public Members

uint16_t **conn_id**

Connection id

esp_bd_addr_t **remote_bda**

Remote bluetooth device address

struct gatts_create_evt_param

#include <esp_gatts_api.h> ESP_GATTS_UNREG_EVT.

ESP_GATTS_CREATE_EVT

Public Members

esp_gatt_status_t **status**

Operation status

uint16_t **service_handle**

Service attribute handle

esp_gatt_srvc_id_t **service_id**

Service id, include service uuid and other information

struct gatts_delete_evt_param

#include <esp_gatts_api.h> ESP_GATTS_DELETE_EVT.

Public Members

esp_gatt_status_t **status**

Operation status

uint16_t **service_handle**

Service attribute handle

struct gatts_disconnect_evt_param

#include <esp_gatts_api.h> ESP_GATTS_DISCONNECT_EVT.

Public Members

uint16_t **conn_id**
Connection id

esp_bd_addr_t **remote_bda**
Remote bluetooth device address

esp_gatt_conn_reason_t **reason**
Indicate the reason of disconnection

struct gatts_exec_write_evt_param
#include <esp_gatts_api.h> ESP_GATTS_EXEC_WRITE_EVT.

Public Members

uint16_t **conn_id**
Connection id

uint32_t **trans_id**
Transfer id

esp_bd_addr_t **bda**
The bluetooth device address which been written

uint8_t **exec_write_flag**
Execute write flag

struct gatts_mtu_evt_param
#include <esp_gatts_api.h> ESP_GATTS_MTU_EVT.

Public Members

uint16_t **conn_id**
Connection id

uint16_t **mtu**
MTU size

struct gatts_open_evt_param
#include <esp_gatts_api.h> ESP_GATTS_OPEN_EVT.

Public Members

esp_gatt_status_t **status**
Operation status

`struct gatts_read_evt_param`

#include <esp_gatts_api.h> ESP_GATTS_READ_EVT.

Public Members

uint16_t **conn_id**

Connection id

uint32_t **trans_id**

Transfer id

esp_bd_addr_t **bda**

The bluetooth device address which been read

uint16_t **handle**

The attribute handle

uint16_t **offset**

Offset of the value, if the value is too long

bool **is_long**

The value is too long or not

bool **need_rsp**

The read operation need to do response

`struct gatts_reg_evt_param`

#include <esp_gatts_api.h> ESP_GATTS_REG_EVT.

Public Members

esp_gatt_status_t **status**

Operation status

uint16_t **app_id**

Application id which input in register API

`struct gatts_rsp_evt_param`

#include <esp_gatts_api.h> ESP_GATTS_RESPONSE_EVT.

Public Members

esp_gatt_status_t **status**

Operation status

uint16_t **handle**

Attribute handle which send response

struct gatts_send_service_change_evt_param

#include <esp_gatts_api.h> ESP_GATTS_SEND_SERVICE_CHANGE_EVT.

Public Members

esp_gatt_status_t **status**

Operation status

struct gatts_set_attr_val_evt_param

#include <esp_gatts_api.h> ESP_GATTS_SET_ATTR_VAL_EVT.

Public Members

uint16_t **srvc_handle**

The service handle

uint16_t **attr_handle**

The attribute handle

esp_gatt_status_t **status**

Operation status

struct gatts_start_evt_param

#include <esp_gatts_api.h> ESP_GATTS_START_EVT.

Public Members

esp_gatt_status_t **status**

Operation status

uint16_t **service_handle**

Service attribute handle

struct gatts_stop_evt_param

#include <esp_gatts_api.h> ESP_GATTS_STOP_EVT.

Public Members

esp_gatt_status_t **status**

Operation status

uint16_t **service_handle**

Service attribute handle

struct gatts_write_evt_param

#include <esp_gatts_api.h> ESP_GATTS_WRITE_EVT.

Public Members

uint16_t **conn_id**
Connection id

uint32_t **trans_id**
Transfer id

esp_bd_addr_t **bda**
The bluetooth device address which been written

uint16_t **handle**
The attribute handle

uint16_t **offset**
Offset of the value, if the value is too long

bool **need_rsp**
The write operation need to do response

bool **is_prep**
This write operation is prepare write

uint16_t **len**
The write attribute value length

uint8_t ***value**
The write attribute value

Macros

ESP_GATT_PREP_WRITE_CANCEL
Prepare write flag to indicate cancel prepare write

ESP_GATT_PREP_WRITE_EXEC
Prepare write flag to indicate execute prepare write

Type Definitions

typedef void (***esp_gatts_cb_t**)(*esp_gatts_cb_event_t* event, *esp_gatt_if_t* gatts_if, *esp_ble_gatts_cb_param_t* *param)
GATT Server callback function type.

Parameters

- `event`: : Event type
- `gatts_if`: : GATT server access interface, normally different gatts_if correspond to different profile

- `param`: : Point to callback parameter, currently is union type

Enumerations

enum esp_gatts_cb_event_t

GATT Server callback function events.

Values:

ESP_GATTS_REG_EVT = 0

When register application id, the event comes

ESP_GATTS_READ_EVT = 1

When gatt client request read operation, the event comes

ESP_GATTS_WRITE_EVT = 2

When gatt client request write operation, the event comes

ESP_GATTS_EXEC_WRITE_EVT = 3

When gatt client request execute write, the event comes

ESP_GATTS_MTU_EVT = 4

When set mtu complete, the event comes

ESP_GATTS_CONF_EVT = 5

When receive confirm, the event comes

ESP_GATTS_UNREG_EVT = 6

When unregister application id, the event comes

ESP_GATTS_CREATE_EVT = 7

When create service complete, the event comes

ESP_GATTS_ADD_INCL_SRVC_EVT = 8

When add included service complete, the event comes

ESP_GATTS_ADD_CHAR_EVT = 9

When add characteristic complete, the event comes

ESP_GATTS_ADD_CHAR_DESCR_EVT = 10

When add descriptor complete, the event comes

ESP_GATTS_DELETE_EVT = 11

When delete service complete, the event comes

ESP_GATTS_START_EVT = 12

When start service complete, the event comes

ESP_GATTS_STOP_EVT = 13

When stop service complete, the event comes

`ESP_GATTS_CONNECT_EVT` = 14
When gatt client connect, the event comes

`ESP_GATTS_DISCONNECT_EVT` = 15
When gatt client disconnect, the event comes

`ESP_GATTS_OPEN_EVT` = 16
When connect to peer, the event comes

`ESP_GATTS_CANCEL_OPEN_EVT` = 17
When disconnect from peer, the event comes

`ESP_GATTS_CLOSE_EVT` = 18
When gatt server close, the event comes

`ESP_GATTS_LISTEN_EVT` = 19
When gatt listen to be connected the event comes

`ESP_GATTS_CONGEST_EVT` = 20
When congest happen, the event comes

`ESP_GATTS_RESPONSE_EVT` = 21
When gatt send response complete, the event comes

`ESP_GATTS_CREAT_ATTR_TAB_EVT` = 22
When gatt create table complete, the event comes

`ESP_GATTS_SET_ATTR_VAL_EVT` = 23
When gatt set attr value complete, the event comes

`ESP_GATTS_SEND_SERVICE_CHANGE_EVT` = 24
When gatt send service change indication complete, the event comes

GATT CLIENT API

Overview

Instructions

Application Example

Check bluetooth folder in ESP-IDF examples, which contains the following demos and their tutorials:

- This is a GATT client demo and its tutorial. This demo can scan for devices, connect to the GATT server and discover its services.
  - bluetooth/gatt_client
  - GATT Client Example Walkthrough

- This is a multiple connection demo and its tutorial. This demo can connect to multiple GATT server devices and discover their services.
  - bluetooth/gattc_multi_connect
  - GATT Client Multi-connection Example Walkthrough
- This is a BLE SPP-Like demo. This demo, which acts as a GATT client, can receive data from UART and then send the data to the peer device automatically.
  - bluetooth/ble_spp_client

API Reference

Header File

- bt/bluedroid/api/include/api/esp_gattc_api.h

Functions

esp_err_t **esp_ble_gattc_register_callback**(*esp_gattc_cb_t callback*)

This function is called to register application callbacks with GATTC module.

Return

- ESP_OK: success
- other: failed

Parameters

- `callback`: : pointer to the application callback function.

esp_err_t **esp_ble_gattc_app_register**(uint16_t *app_id*)

This function is called to register application callbacks with GATTC module.

Return

- ESP_OK: success
- other: failed

Parameters

- `app_id`: : Application Identify (UUID), for different application

esp_err_t **esp_ble_gattc_app_unregister**(*esp_gatt_if_t gattc_if*)

This function is called to unregister an application from GATTC module.

Return

- ESP_OK: success
- other: failed

Parameters

- `gattc_if`: Gatt client access interface.

esp_err_t **esp_ble_gattc_open**(*esp_gatt_if_t gattc_if*, *esp_bd_addr_t remote_bda*, *esp_ble_addr_type_t remote_addr_type*, bool *is_direct*)

Open a direct connection or add a background auto connection.

Return

- ESP_OK: success
- other: failed

Parameters

- `gattc_if`: Gatt client access interface.
- `remote_bda`: remote device bluetooth device address.
- `remote_addr_type`: remote device bluetooth device the address type.
- `is_direct`: direct connection or background auto connection

esp_err_t **esp_ble_gattc_close**(*esp_gatt_if_t gattc_if*, uint16_t *conn_id*)

Close the virtual connection to the GATT server. gattc may have multiple virtual GATT server connections when multiple app_id registered, this API only close one virtual GATT server connection. if there exist other virtual GATT server connections, it does not disconnect the physical connection. if you want to disconnect the physical connection directly, you can use esp_ble_gap_disconnect(esp_bd_addr_t remote_device).

Return

- ESP_OK: success
- other: failed

Parameters

- `gattc_if`: Gatt client access interface.
- `conn_id`: connection ID to be closed.

esp_err_t **esp_ble_gattc_send_mtu_req**(*esp_gatt_if_t gattc_if*, uint16_t *conn_id*)

Configure the MTU size in the GATT channel. This can be done only once per connection. Before using, use esp_ble_gatt_set_local_mtu() to configure the local MTU size.

Return

- ESP_OK: success
- other: failed

Parameters

- `gattc_if`: Gatt client access interface.
- `conn_id`: connection ID.

esp_err_t **esp_ble_gattc_search_service**(*esp_gatt_if_t gattc_if*, uint16_t *conn_id*, *esp_bt_uuid_t* **filter_uuid*)

This function is called to get service from local cache. If it does not exist, request a GATT service discovery on a GATT server. This function report service search result by a callback event, and followed by a service search complete event.

Return

- ESP_OK: success
- other: failed

Parameters

- `gattc_if`: Gatt client access interface.
- `conn_id`: connection ID.
- `filter_uuid`: a UUID of the service application is interested in. If Null, discover for all services.

esp_gatt_status_t **esp_ble_gattc_get_service**(*esp_gatt_if_t gattc_if*, uint16_t *conn_id*, *esp_bt_uuid_t* **svc_uuid*, *esp_gattc_service_elem_t* **result*, uint16_t **count*, uint16_t *offset*)

Find all the service with the given service uuid in the gattc cache, if the svc_uuid is NULL, find all the service. Note: It just get service from local cache, won't get from remote devices. If want to get it from remote device, need to used the esp_ble_gattc_search_service.

Return

- ESP_OK: success
- other: failed

Parameters

- `gattc_if`: Gatt client access interface.
- `conn_id`: connection ID which identify the server.
- `svc_uuid`: the pointer to the service uuid.
- `result`: The pointer to the service which has been found in the gattc cache.

- `count`: input the number of service want to find, it will output the number of service has been found in the gattc cache with the given service uuid.
- `offset`: Offset of the service position to get.

esp_gatt_status_t **esp_ble_gattc_get_all_char**(*esp_gatt_if_t gattc_if*, uint16_t *conn_id*, uint16_t *start_handle*, uint16_t *end_handle*, *esp_gattc_char_elem_t* **result*, uint16_t **count*, uint16_t *offset*)

Find all the characteristic with the given service in the gattc cache Note: It just get characteristic from local cache, won't get from remote devices.

Return

- ESP_OK: success
- other: failed

Parameters

- `gattc_if`: Gatt client access interface.
- `conn_id`: connection ID which identify the server.
- `start_handle`: the attribute start handle.
- `end_handle`: the attribute end handle
- `result`: The pointer to the characteristic in the service.
- `count`: input the number of characteristic want to find, it will output the number of characteristic has been found in the gattc cache with the given service.
- `offset`: Offset of the characteristic position to get.

esp_gatt_status_t **esp_ble_gattc_get_all_descr**(*esp_gatt_if_t gattc_if*, uint16_t *conn_id*, uint16_t *char_handle*, *esp_gattc_descr_elem_t* **result*, uint16_t **count*, uint16_t *offset*)

Find all the descriptor with the given characteristic in the gattc cache Note: It just get descriptor from local cache, won't get from remote devices.

Return

- ESP_OK: success
- other: failed

Parameters

- `gattc_if`: Gatt client access interface.
- `conn_id`: connection ID which identify the server.
- `char_handle`: the given characteristic handle

- `result`: The pointer to the descriptor in the characteristic.
- `count`: input the number of descriptor want to find, it will output the number of descriptor has been found in the gattc cache with the given characteristic.
- `offset`: Offset of the descriptor position to get.

esp_gatt_status_t **esp_ble_gattc_get_char_by_uuid**(*esp_gatt_if_t gattc_if*, uint16_t *conn_id*, uint16_t *start_handle*, uint16_t *end_handle*, *esp_bt_uuid_t char_uuid*, *esp_gattc_char_elem_t* **result*, uint16_t **count*)

Find the characteristic with the given characteristic uuid in the gattc cache Note: It just get characteristic from local cache, won't get from remote devices.

Return

- ESP_OK: success
- other: failed

Parameters

- `gattc_if`: Gatt client access interface.
- `conn_id`: connection ID which identify the server.
- `start_handle`: the attribute start handle
- `end_handle`: the attribute end handle
- `char_uuid`: the characteristic uuid
- `result`: The pointer to the characteristic in the service.
- `count`: input the number of characteristic want to find, it will output the number of characteristic has been found in the gattc cache with the given service.

esp_gatt_status_t **esp_ble_gattc_get_descr_by_uuid**(*esp_gatt_if_t gattc_if*, uint16_t *conn_id*, uint16_t *start_handle*, uint16_t *end_handle*, *esp_bt_uuid_t char_uuid*, *esp_bt_uuid_t descr_uuid*, *esp_gattc_descr_elem_t* **result*, uint16_t **count*)

Find the descriptor with the given characteristic uuid in the gattc cache Note: It just get descriptor from local cache, won't get from remote devices.

Return

- ESP_OK: success
- other: failed

Parameters

- `gattc_if`: Gatt client access interface.
- `conn_id`: connection ID which identify the server.
- `start_handle`: the attribute start handle
- `end_handle`: the attribute end handle
- `char_uuid`: the characteristic uuid.
- `descr_uuid`: the descriptor uuid.
- `result`: The pointer to the descriptor in the given characteristic.
- `count`: input the number of descriptor want to find, it will output the number of descriptor has been found in the gattc cache with the given characteristic.

esp_gatt_status_t **esp_ble_gattc_get_descr_by_char_handle**(*esp_gatt_if_t gattc_if*, uint16_t *conn_id*, uint16_t *char_handle*, *esp_bt_uuid_t descr_uuid*, *esp_gattc_descr_elem_t* **result*, uint16_t **count*)

Find the descriptor with the given characteristic handle in the gattc cache Note: It just get descriptor from local cache, won't get from remote devices.

Return

- ESP_OK: success
- other: failed

Parameters

- `gattc_if`: Gatt client access interface.
- `conn_id`: connection ID which identify the server.
- `char_handle`: the characteristic handle.
- `descr_uuid`: the descriptor uuid.
- `result`: The pointer to the descriptor in the given characteristic.
- `count`: input the number of descriptor want to find, it will output the number of descriptor has been found in the gattc cache with the given characteristic.

esp_gatt_status_t **esp_ble_gattc_get_include_service**(*esp_gatt_if_t gattc_if*, uint16_t *conn_id*, uint16_t *start_handle*, uint16_t *end_handle*, *esp_bt_uuid_t* **incl_uuid*, *esp_gattc_incl_svc_elem_t* **result*, uint16_t **count*)

Find the include service with the given service handle in the gattc cache Note: It just get include service from local cache, won't get from remote devices.

Return

- ESP_OK: success
- other: failed

Parameters

- `gattc_if`: Gatt client access interface.
- `conn_id`: connection ID which identify the server.
- `start_handle`: the attribute start handle
- `end_handle`: the attribute end handle
- `incl_uuid`: the include service uuid
- `result`: The pointer to the include service in the given service.
- `count`: input the number of include service want to find, it will output the number of include service has been found in the gattc cache with the given service.

esp_gatt_status_t **esp_ble_gattc_get_attr_count**(*esp_gatt_if_t gattc_if*, uint16_t *conn_id*, *esp_gatt_db_attr_type_t type*, uint16_t *start_handle*, uint16_t *end_handle*, uint16_t *char_handle*, uint16_t **count*)

Find the attribute count with the given service or characteristic in the gattc cache.

Return

- ESP_OK: success
- other: failed

Parameters

- `gattc_if`: Gatt client access interface.
- `conn_id`: connection ID which identify the server.
- `type`: the attribute type.
- `start_handle`: the attribute start handle, if the type is ESP_GATT_DB_DESCRIPTOR, this parameter should be ignore
- `end_handle`: the attribute end handle, if the type is ESP_GATT_DB_DESCRIPTOR, this parameter should be ignore

- `char_handle`: the characteristic handle, this parameter valid when the type is ESP_GATT_DB_DESCRIPTOR. If the type isn't ESP_GATT_DB_DESCRIPTOR, this parameter should be ignore.
- `count`: output the number of attribute has been found in the gattc cache with the given attribute type.

esp_gatt_status_t **esp_ble_gattc_get_db**(*esp_gatt_if_t gattc_if*, uint16_t *conn_id*, uint16_t *start_handle*, uint16_t *end_handle*, *esp_gattc_db_elem_t* **db*, uint16_t **count*)

This function is called to get the GATT database. Note: It just get attribute data base from local cache, won't get from remote devices.

Return

- ESP_OK: success
- other: failed

Parameters

- `gattc_if`: Gatt client access interface.
- `start_handle`: the attribute start handle
- `end_handle`: the attribute end handle
- `conn_id`: connection ID which identify the server.
- `db`: output parameter which will contain the GATT database copy. Caller is responsible for freeing it.
- `count`: number of elements in database.

esp_err_t **esp_ble_gattc_read_char**(*esp_gatt_if_t gattc_if*, uint16_t *conn_id*, uint16_t *handle*, *esp_gatt_auth_req_t auth_req*)

This function is called to read a service's characteristics of the given characteristic handle.

Return

- ESP_OK: success
- other: failed

Parameters

- `gattc_if`: Gatt client access interface.
- `conn_id`: : connection ID.
- `handle`: : characteritic handle to read.
- `auth_req`: : authenticate request type

esp_err_t **esp_ble_gattc_read_by_type**(*esp_gatt_if_t gattc_if*, uint16_t *conn_id*, uint16_t *start_handle*, uint16_t *end_handle*, *esp_bt_uuid_t* **uuid*, *esp_gatt_auth_req_t auth_req*)

This function is called to read a service' s characteristics of the given characteristic UUID.

Return

- ESP_OK: success
- other: failed

Parameters

- `gattc_if`: Gatt client access interface.
- `conn_id`: : connection ID.
- `start_handle`: : the attribute start handle.
- `end_handle`: : the attribute end handle
- `uuid`: : The UUID of attribute which will be read.
- `auth_req`: : authenticate request type

esp_err_t **esp_ble_gattc_read_multiple**(*esp_gatt_if_t gattc_if*, uint16_t *conn_id*, *esp_gattc_multi_t* **read_multi*, *esp_gatt_auth_req_t auth_req*)

This function is called to read multiple characteristic or characteristic descriptors.

Return

- ESP_OK: success
- other: failed

Parameters

- `gattc_if`: Gatt client access interface.
- `conn_id`: : connection ID.
- `read_multi`: : pointer to the read multiple parameter.
- `auth_req`: : authenticate request type

esp_err_t **esp_ble_gattc_read_char_descr**(*esp_gatt_if_t gattc_if*, uint16_t *conn_id*, uint16_t *handle*, *esp_gatt_auth_req_t auth_req*)

This function is called to read a characteristics descriptor.

Return

- ESP_OK: success
- other: failed

Parameters

- `gattc_if`: Gatt client access interface.
- `conn_id`: : connection ID.
- `handle`: : descriptor handle to read.
- `auth_req`: : authenticate request type

esp_err_t **esp_ble_gattc_write_char**(*esp_gatt_if_t gattc_if*, uint16_t *conn_id*, uint16_t *handle*, uint16_t *value_len*, uint8_t **value*, *esp_gatt_write_type_t write_type*, *esp_gatt_auth_req_t auth_req*)

This function is called to write characteristic value.

Return

- ESP_OK: success
- other: failed

Parameters

- `gattc_if`: Gatt client access interface.
- `conn_id`: : connection ID.
- `handle`: : characteristic handle to write.
- `value_len`: length of the value to be written.
- `value`: : the value to be written.
- `write_type`: : the type of attribute write operation.
- `auth_req`: : authentication request.

esp_err_t **esp_ble_gattc_write_char_descr**(*esp_gatt_if_t gattc_if*, uint16_t *conn_id*, uint16_t *handle*, uint16_t *value_len*, uint8_t **value*, *esp_gatt_write_type_t write_type*, *esp_gatt_auth_req_t auth_req*)

This function is called to write characteristic descriptor value.

Return

- ESP_OK: success
- other: failed

Parameters

- `gattc_if`: Gatt client access interface.
- `conn_id`: : connection ID

- `handle`: : descriptor hadle to write.
- `value_len`: length of the value to be written.
- `value`: : the value to be written.
- `write_type`: : the type of attribute write operation.
- `auth_req`: : authentication request.

esp_err_t **esp_ble_gattc_prepare_write**(*esp_gatt_if_t gattc_if*, uint16_t *conn_id*, uint16_t *handle*, uint16_t *offset*, uint16_t *value_len*, uint8_t **value*, *esp_gatt_auth_req_t auth_req*)

This function is called to prepare write a characteristic value.

Return

- ESP_OK: success
- other: failed

Parameters

- `gattc_if`: Gatt client access interface.
- `conn_id`: : connection ID.
- `handle`: : characteristic handle to prepare write.
- `offset`: : offset of the write value.
- `value_len`: length of the value to be written.
- `value`: : the value to be written.
- `auth_req`: : authentication request.

esp_err_t **esp_ble_gattc_prepare_write_char_descr**(*esp_gatt_if_t gattc_if*, uint16_t *conn_id*, uint16_t *handle*, uint16_t *offset*, uint16_t *value_len*, uint8_t **value*, *esp_gatt_auth_req_t auth_req*)

This function is called to prepare write a characteristic descriptor value.

Return

- ESP_OK: success
- other: failed

Parameters

- `gattc_if`: Gatt client access interface.
- `conn_id`: : connection ID.

- `handle`: : characteristic descriptor handle to prepare write.
- `offset`: : offset of the write value.
- `value_len`: length of the value to be written.
- `value`: : the value to be written.
- `auth_req`: : authentication request.

esp_err_t **esp_ble_gattc_execute_write**(*esp_gatt_if_t gattc_if*, uint16_t *conn_id*, bool *is_execute*)

This function is called to execute write a prepare write sequence.

Return

- ESP_OK: success
- other: failed

Parameters

- `gattc_if`: Gatt client access interface.
- `conn_id`: : connection ID.
- `is_execute`: : execute or cancel.

esp_err_t **esp_ble_gattc_register_for_notify**(*esp_gatt_if_t gattc_if*, *esp_bd_addr_t server_bda*, uint16_t *handle*)

This function is called to register for notification of a service.

Return

- ESP_OK: registration succeeds
- other: failed

Parameters

- `gattc_if`: Gatt client access interface.
- `server_bda`: : target GATT server.
- `handle`: : GATT characteristic handle.

esp_err_t **esp_ble_gattc_unregister_for_notify**(*esp_gatt_if_t gattc_if*, *esp_bd_addr_t server_bda*, uint16_t *handle*)

This function is called to de-register for notification of a service.

Return

- ESP_OK: unregister succeeds
- other: failed

Parameters

- `gattc_if`: Gatt client access interface.
- `server_bda`: : target GATT server.
- `handle`: : GATT characteristic handle.

esp_err_t **esp_ble_gattc_cache_refresh**(*esp_bd_addr_t remote_bda*)

Refresh the server cache store in the gattc stack of the remote device.

Return

- ESP_OK: success
- other: failed

Parameters

- `remote_bda`: remote device BD address.

esp_err_t **esp_ble_gattc_cache_assoc**(*esp_gatt_if_t gattc_if*, *esp_bd_addr_t src_addr*, *esp_bd_addr_t assoc_addr*, bool *is_assoc*)

Add or delete the associated address with the source address. Note: The role of this API is mainly when the client side has stored a server-side database, when it needs to connect another device, but the device' s attribute database is the same as the server database stored on the client-side, calling this API can use the database that the device has stored used as the peer server database to reduce the attribute database search and discovery process and speed up the connection time. The associated address mains that device want to used the database has stored in the local cache. The source address mains that device want to share the database to the associated address device.

Return

- ESP_OK: success
- other: failed

Parameters

- `gattc_if`: Gatt client access interface.
- `src_addr`: the source address which provide the attribute table.
- `assoc_addr`: the associated device address which went to share the attribute table with the source address.
- `is_assoc`: true add the associated device address, false remove the associated device address.

esp_err_t **esp_ble_gattc_cache_get_addr_list**(*esp_gatt_if_t gattc_if*)

Get the address list which has store the attribute table in the gattc cache. There will callback ESP_GATTC_GET_ADDR_LIST_EVT event when get address list complete.

Return

- ESP_OK: success
- other: failed

Parameters

- `gattc_if`: Gatt client access interface.

Unions

`union esp_ble_gattc_cb_param_t`

#include <esp_gattc_api.h> Gatt client callback parameters union.

Public Members

struct *esp_ble_gattc_cb_param_t*::*gattc_reg_evt_param* **reg**

Gatt client callback param of ESP_GATTC_REG_EVT

struct *esp_ble_gattc_cb_param_t*::*gattc_open_evt_param* **open**

Gatt client callback param of ESP_GATTC_OPEN_EVT

struct *esp_ble_gattc_cb_param_t*::*gattc_close_evt_param* **close**

Gatt client callback param of ESP_GATTC_CLOSE_EVT

struct *esp_ble_gattc_cb_param_t*::*gattc_cfg_mtu_evt_param* **cfg_mtu**

Gatt client callback param of ESP_GATTC_CFG_MTU_EVT

struct *esp_ble_gattc_cb_param_t*::*gattc_search_cmpl_evt_param* **search_cmpl**

Gatt client callback param of ESP_GATTC_SEARCH_CMPL_EVT

struct *esp_ble_gattc_cb_param_t*::*gattc_search_res_evt_param* **search_res**

Gatt client callback param of ESP_GATTC_SEARCH_RES_EVT

struct *esp_ble_gattc_cb_param_t*::*gattc_read_char_evt_param* **read**

Gatt client callback param of ESP_GATTC_READ_CHAR_EVT

struct *esp_ble_gattc_cb_param_t*::*gattc_write_evt_param* **write**

Gatt client callback param of ESP_GATTC_WRITE_DESCR_EVT

struct *esp_ble_gattc_cb_param_t*::*gattc_exec_cmpl_evt_param* **exec_cmpl**

Gatt client callback param of ESP_GATTC_EXEC_EVT

struct *esp_ble_gattc_cb_param_t*::*gattc_notify_evt_param* **notify**

Gatt client callback param of ESP_GATTC_NOTIFY_EVT

struct *esp_ble_gattc_cb_param_t*::*gattc_srvc_chg_evt_param* **srvc_chg**

Gatt client callback param of ESP_GATTC_SRVC_CHG_EVT

struct *esp_ble_gattc_cb_param_t*::*gattc_congest_evt_param* **congest**

Gatt client callback param of ESP_GATTC_CONGEST_EVT

struct *esp_ble_gattc_cb_param_t*::*gattc_reg_for_notify_evt_param* **reg_for_notify**

Gatt client callback param of ESP_GATTC_REG_FOR_NOTIFY_EVT

struct *esp_ble_gattc_cb_param_t*::*gattc_unreg_for_notify_evt_param* **unreg_for_notify**

Gatt client callback param of ESP_GATTC_UNREG_FOR_NOTIFY_EVT

struct *esp_ble_gattc_cb_param_t*::*gattc_connect_evt_param* **connect**

Gatt client callback param of ESP_GATTC_CONNECT_EVT

struct *esp_ble_gattc_cb_param_t*::*gattc_disconnect_evt_param* **disconnect**

Gatt client callback param of ESP_GATTC_DISCONNECT_EVT

struct *esp_ble_gattc_cb_param_t*::*gattc_set_assoc_addr_cmp_evt_param* **set_assoc_cmp**

Gatt client callback param of ESP_GATTC_SET_ASSOC_EVT

struct *esp_ble_gattc_cb_param_t*::*gattc_get_addr_list_evt_param* **get_addr_list**

Gatt client callback param of ESP_GATTC_GET_ADDR_LIST_EVT

struct *esp_ble_gattc_cb_param_t*::*gattc_queue_full_evt_param* **queue_full**

Gatt client callback param of ESP_GATTC_QUEUE_FULL_EVT

struct gattc_cfg_mtu_evt_param

#include <esp_gattc_api.h> ESP_GATTC_CFG_MTU_EVT.

Public Members

esp_gatt_status_t **status**

Operation status

uint16_t **conn_id**

Connection id

uint16_t **mtu**

MTU size

struct gattc_close_evt_param

#include <esp_gattc_api.h> ESP_GATTC_CLOSE_EVT.

Public Members

esp_gatt_status_t **status**

Operation status

uint16_t **conn_id**

Connection id

esp_bd_addr_t **remote_bda**

Remote bluetooth device address

esp_gatt_conn_reason_t **reason**

The reason of gatt connection close

struct gattc_congest_evt_param

#include <esp_gattc_api.h> ESP_GATTC_CONGEST_EVT.

Public Members

uint16_t **conn_id**

Connection id

bool **congested**

Congested or not

struct gattc_connect_evt_param

#include <esp_gattc_api.h> ESP_GATTC_CONNECT_EVT.

Public Members

uint16_t **conn_id**

Connection id

esp_bd_addr_t **remote_bda**

Remote bluetooth device address

struct gattc_disconnect_evt_param

#include <esp_gattc_api.h> ESP_GATTC_DISCONNECT_EVT.

Public Members

esp_gatt_conn_reason_t **reason**

disconnection reason

uint16_t **conn_id**

Connection id

esp_bd_addr_t **remote_bda**

Remote bluetooth device address

struct gattc_exec_cmpl_evt_param

#include <esp_gattc_api.h> ESP_GATTC_EXEC_EVT.

Public Members

esp_gatt_status_t **status**
Operation status

uint16_t **conn_id**
Connection id

struct gattc_get_addr_list_evt_param
#include <esp_gattc_api.h> ESP_GATTC_GET_ADDR_LIST_EVT.

Public Members

esp_gatt_status_t **status**
Operation status

uint8_t **num_addr**
The number of address in the gattc cache address list

esp_bd_addr_t ***addr_list**
The pointer to the address list which has been get from the gattc cache

struct gattc_notify_evt_param
#include <esp_gattc_api.h> ESP_GATTC_NOTIFY_EVT.

Public Members

uint16_t **conn_id**
Connection id

esp_bd_addr_t **remote_bda**
Remote bluetooth device address

uint16_t **handle**
The Characteristic or descriptor handle

uint16_t **value_len**
Notify attribute value

uint8_t ***value**
Notify attribute value

bool **is_notify**
True means notify, false means indicate

struct gattc_open_evt_param
#include <esp_gattc_api.h> ESP_GATTC_OPEN_EVT.

Public Members

esp_gatt_status_t **status**
Operation status

uint16_t **conn_id**
Connection id

esp_bd_addr_t **remote_bda**
Remote bluetooth device address

uint16_t **mtu**
MTU size

struct gattc_queue_full_evt_param
#include <esp_gattc_api.h> ESP_GATTC_QUEUE_FULL_EVT.

Public Members

esp_gatt_status_t **status**
Operation status

uint16_t **conn_id**
Connection id

bool **is_full**
The gattc command queue is full or not

struct gattc_read_char_evt_param
#include <esp_gattc_api.h> ESP_GATTC_READ_CHAR_EVT, ESP_GATTC_READ_DESCR_EVT.

Public Members

esp_gatt_status_t **status**
Operation status

uint16_t **conn_id**
Connection id

uint16_t **handle**
Characteristic handle

uint8_t ***value**
Characteristic value

uint16_t **value_len**
Characteristic value length

struct gattc_reg_evt_param

#include <esp_gattc_api.h> ESP_GATTC_REG_EVT.

Public Members

esp_gatt_status_t **status**

Operation status

uint16_t **app_id**

Application id which input in register API

struct gattc_reg_for_notify_evt_param

#include <esp_gattc_api.h> ESP_GATTC_REG_FOR_NOTIFY_EVT.

Public Members

esp_gatt_status_t **status**

Operation status

uint16_t **handle**

The characteristic or descriptor handle

struct gattc_search_cmpl_evt_param

#include <esp_gattc_api.h> ESP_GATTC_SEARCH_CMPL_EVT.

Public Members

esp_gatt_status_t **status**

Operation status

uint16_t **conn_id**

Connection id

esp_service_source_t **searched_service_source**

The source of the service information

struct gattc_search_res_evt_param

#include <esp_gattc_api.h> ESP_GATTC_SEARCH_RES_EVT.

Public Members

uint16_t **conn_id**

Connection id

uint16_t **start_handle**

Service start handle

uint16_t **end_handle**

Service end handle

esp_gatt_id_t **srvc_id**

Service id, include service uuid and other information

bool **is_primary**

True if this is the primary service

struct gattc_set_assoc_addr_cmp_evt_param

#include <esp_gattc_api.h> ESP_GATTC_SET_ASSOC_EVT.

Public Members

esp_gatt_status_t **status**

Operation status

struct gattc_srvc_chg_evt_param

#include <esp_gattc_api.h> ESP_GATTC_SRVC_CHG_EVT.

Public Members

esp_bd_addr_t **remote_bda**

Remote bluetooth device address

struct gattc_unreg_for_notify_evt_param

#include <esp_gattc_api.h> ESP_GATTC_UNREG_FOR_NOTIFY_EVT.

Public Members

esp_gatt_status_t **status**

Operation status

uint16_t **handle**

The characteristic or descriptor handle

struct gattc_write_evt_param

#include <esp_gattc_api.h> ESP_GATTC_WRITE_CHAR_EVT, ESP_GATTC_PREP_WRITE_EVT, ESP_GATTC_WRITE_DESCR_EVT.

Public Members

esp_gatt_status_t **status**

Operation status

uint16_t **conn_id**
Connection id

uint16_t **handle**
The Characteristic or descriptor handle

uint16_t **offset**
The prepare write offset, this value is valid only when prepare write

Type Definitions

typedef void (***esp_gattc_cb_t**)(*esp_gattc_cb_event_t* event, *esp_gatt_if_t* gattc_if, *esp_ble_gattc_cb_param_t* *param)
GATT Client callback function type.

Parameters

- `event`: : Event type
- `gattc_if`: : GATT client access interface, normally different gattc_if correspond to different profile
- `param`: : Point to callback parameter, currently is union type

Enumerations

enum esp_gattc_cb_event_t
GATT Client callback function events.

Values:

ESP_GATTC_REG_EVT = 0
When GATT client is registered, the event comes

ESP_GATTC_UNREG_EVT = 1
When GATT client is unregistered, the event comes

ESP_GATTC_OPEN_EVT = 2
When GATT virtual connection is set up, the event comes

ESP_GATTC_READ_CHAR_EVT = 3
When GATT characteristic is read, the event comes

ESP_GATTC_WRITE_CHAR_EVT = 4
When GATT characteristic write operation completes, the event comes

ESP_GATTC_CLOSE_EVT = 5
When GATT virtual connection is closed, the event comes

`ESP_GATTC_SEARCH_CMPL_EVT` = 6

When GATT service discovery is completed, the event comes

`ESP_GATTC_SEARCH_RES_EVT` = 7

When GATT service discovery result is got, the event comes

`ESP_GATTC_READ_DESCR_EVT` = 8

When GATT characteristic descriptor read completes, the event comes

`ESP_GATTC_WRITE_DESCR_EVT` = 9

When GATT characteristic descriptor write completes, the event comes

`ESP_GATTC_NOTIFY_EVT` = 10

When GATT notification or indication arrives, the event comes

`ESP_GATTC_PREP_WRITE_EVT` = 11

When GATT prepare-write operation completes, the event comes

`ESP_GATTC_EXEC_EVT` = 12

When write execution completes, the event comes

`ESP_GATTC_ACL_EVT` = 13

When ACL connection is up, the event comes

`ESP_GATTC_CANCEL_OPEN_EVT` = 14

When GATT client ongoing connection is cancelled, the event comes

`ESP_GATTC_SRVC_CHG_EVT` = 15

When "service changed" occurs, the event comes

`ESP_GATTC_ENC_CMPL_CB_EVT` = 17

When encryption procedure completes, the event comes

`ESP_GATTC_CFG_MTU_EVT` = 18

When configuration of MTU completes, the event comes

`ESP_GATTC_ADV_DATA_EVT` = 19

When advertising of data, the event comes

`ESP_GATTC_MULT_ADV_ENB_EVT` = 20

When multi-advertising is enabled, the event comes

`ESP_GATTC_MULT_ADV_UPD_EVT` = 21

When multi-advertising parameters are updated, the event comes

`ESP_GATTC_MULT_ADV_DATA_EVT` = 22

When multi-advertising data arrives, the event comes

`ESP_GATTC_MULT_ADV_DIS_EVT` = 23

When multi-advertising is disabled, the event comes

`ESP_GATTC_CONGEST_EVT` = 24

When GATT connection congestion comes, the event comes

`ESP_GATTC_BTH_SCAN_ENB_EVT` = 25

When batch scan is enabled, the event comes

`ESP_GATTC_BTH_SCAN_CFG_EVT` = 26

When batch scan storage is configured, the event comes

`ESP_GATTC_BTH_SCAN_RD_EVT` = 27

When Batch scan read event is reported, the event comes

`ESP_GATTC_BTH_SCAN_THR_EVT` = 28

When Batch scan threshold is set, the event comes

`ESP_GATTC_BTH_SCAN_PARAM_EVT` = 29

When Batch scan parameters are set, the event comes

`ESP_GATTC_BTH_SCAN_DIS_EVT` = 30

When Batch scan is disabled, the event comes

`ESP_GATTC_SCAN_FLT_CFG_EVT` = 31

When Scan filter configuration completes, the event comes

`ESP_GATTC_SCAN_FLT_PARAM_EVT` = 32

When Scan filter parameters are set, the event comes

`ESP_GATTC_SCAN_FLT_STATUS_EVT` = 33

When Scan filter status is reported, the event comes

`ESP_GATTC_ADV_VSC_EVT` = 34

When advertising vendor spec content event is reported, the event comes

`ESP_GATTC_REG_FOR_NOTIFY_EVT` = 38

When register for notification of a service completes, the event comes

`ESP_GATTC_UNREG_FOR_NOTIFY_EVT` = 39

When unregister for notification of a service completes, the event comes

`ESP_GATTC_CONNECT_EVT` = 40

When the ble physical connection is set up, the event comes

`ESP_GATTC_DISCONNECT_EVT` = 41

When the ble physical connection disconnected, the event comes

`ESP_GATTC_READ_MULTIPLE_EVT` = 42

When the ble characteristic or descriptor multiple complete, the event comes

`ESP_GATTC_QUEUE_FULL_EVT` = 43

When the gattc command queue full, the event comes

`ESP_GATTC_SET_ASSOC_EVT` = 44

When the ble gattc set the associated address complete, the event comes

`ESP_GATTC_GET_ADDR_LIST_EVT` = 45

When the ble get gattc address list in cache finish, the event comes

BLUFI API

Overview

BLUFI is a profile based GATT to config ESP32 WIFI to connect/disconnect AP or setup a softap and etc. Use should concern these things:

1. The event sent from profile. Then you need to do something as the event indicate.
2. Security reference. You can write your own Security functions such as symmetrical encryption/decryption and checksum functions. Even you can define the "Key Exchange/Negotiation" procedure.

Application Example

Check bluetooth folder in ESP-IDF examples, which contains the following application:

- This is a BLUFI demo. This demo can set ESP32' s wifi to softap/station/softap&station mode and config wifi connections - bluetooth/blufi

API Reference

Header File

- bt/bluedroid/api/include/api/esp_blufi_api.h

Functions

esp_err_t **esp_blufi_register_callbacks**(*esp_blufi_callbacks_t* **callbacks*)

This function is called to receive blufi callback event.

Return ESP_OK - success, other - failed

Parameters

- `callbacks`: callback functions

esp_err_t **esp_blufi_profile_init**(void)

This function is called to initialize blufi_profile.

Return ESP_OK - success, other - failed

esp_err_t **esp_blufi_profile_deinit**(void)

This function is called to de-initialize blufi_profile.

Return ESP_OK - success, other - failed

esp_err_t **esp_blufi_send_wifi_conn_report**(*wifi_mode_t opmode*, *esp_blufi_sta_conn_state_t sta_conn_state*, uint8_t *softap_conn_num*, *esp_blufi_extra_info_t* **extra_info*)

This function is called to send wifi connection report.

Return ESP_OK - success, other - failed

Parameters

- `opmode`: : wifi opmode
- `sta_conn_state`: : station is already in connection or not
- `softap_conn_num`: : softap connection number
- `extra_info`: : extra information, such as sta_ssid, softap_ssid and etc.

esp_err_t **esp_blufi_send_wifi_list**(uint16_t *apCount*, *esp_blufi_ap_record_t* **list*)

This function is called to send wifi list.

Return ESP_OK - success, other - failed

Parameters

- `apCount`: : wifi list count
- `list`: : wifi list

uint16_t **esp_blufi_get_version**(void)

Get BLUFI profile version.

Return Most 8bit significant is Great version, Least 8bit is Sub version

esp_err_t **esp_blufi_close**(*esp_gatt_if_t gatts_if*, uint16_t *conn_id*)

Close a connection a remote device.

Return

- ESP_OK : success
- other : failed

Parameters

- `gatts_if`: GATT server access interface

- `conn_id`: connection ID to be closed.

esp_err_t **esp_blufi_send_error_info**(*esp_blufi_error_state_t state*)

This function is called to send blufi error information.

Return ESP_OK - success, other - failed

Parameters

- `state`: : error state

esp_err_t **esp_blufi_send_custom_data**(uint8_t **data*, uint32_t *data_len*)

This function is called to custom data.

Return ESP_OK - success, other - failed

Parameters

- `data`: : custom data value
- `data_len`: : the length of custom data

Unions

union esp_blufi_cb_param_t

#include <esp_blufi_api.h> BLUFI callback parameters union.

Public Members

struct *esp_blufi_cb_param_t*::*blufi_init_finish_evt_param* **init_finish**

Blufi callback param of ESP_BLUFI_EVENT_INIT_FINISH

struct *esp_blufi_cb_param_t*::*blufi_deinit_finish_evt_param* **deinit_finish**

Blufi callback param of ESP_BLUFI_EVENT_DEINIT_FINISH

struct *esp_blufi_cb_param_t*::*blufi_set_wifi_mode_evt_param* **wifi_mode**

Blufi callback param of ESP_BLUFI_EVENT_INIT_FINISH

struct *esp_blufi_cb_param_t*::*blufi_connect_evt_param* **connect**

Blufi callback param of ESP_BLUFI_EVENT_CONNECT

struct *esp_blufi_cb_param_t*::*blufi_disconnect_evt_param* **disconnect**

Blufi callback param of ESP_BLUFI_EVENT_DISCONNECT

struct *esp_blufi_cb_param_t*::*blufi_recv_sta_bssid_evt_param* **sta_bssid**

Blufi callback param of ESP_BLUFI_EVENT_RECV_STA_BSSID

struct *esp_blufi_cb_param_t*::*blufi_recv_sta_ssid_evt_param* **sta_ssid**

Blufi callback param of ESP_BLUFI_EVENT_RECV_STA_SSID

struct *esp_blufi_cb_param_t*::*blufi_recv_sta_passwd_evt_param* **sta_passwd**
Blufi callback param of ESP_BLUFI_EVENT_RECV_STA_PASSWD

struct *esp_blufi_cb_param_t*::*blufi_recv_softap_ssid_evt_param* **softap_ssid**
Blufi callback param of ESP_BLUFI_EVENT_RECV_SOFTAP_SSID

struct *esp_blufi_cb_param_t*::*blufi_recv_softap_passwd_evt_param* **softap_passwd**
Blufi callback param of ESP_BLUFI_EVENT_RECV_SOFTAP_PASSWD

struct *esp_blufi_cb_param_t*::*blufi_recv_softap_max_conn_num_evt_param* **softap_max_conn_num**
Blufi callback param of ESP_BLUFI_EVENT_RECV_SOFTAP_MAX_CONN_NUM

struct *esp_blufi_cb_param_t*::*blufi_recv_softap_auth_mode_evt_param* **softap_auth_mode**
Blufi callback param of ESP_BLUFI_EVENT_RECV_SOFTAP_AUTH_MODE

struct *esp_blufi_cb_param_t*::*blufi_recv_softap_channel_evt_param* **softap_channel**
Blufi callback param of ESP_BLUFI_EVENT_RECV_SOFTAP_CHANNEL

struct *esp_blufi_cb_param_t*::*blufi_recv_username_evt_param* **username**
Blufi callback param of ESP_BLUFI_EVENT_RECV_USERNAME

struct *esp_blufi_cb_param_t*::*blufi_recv_ca_evt_param* **ca**
Blufi callback param of ESP_BLUFI_EVENT_RECV_CA_CERT

struct *esp_blufi_cb_param_t*::*blufi_recv_client_cert_evt_param* **client_cert**
Blufi callback param of ESP_BLUFI_EVENT_RECV_CLIENT_CERT

struct *esp_blufi_cb_param_t*::*blufi_recv_server_cert_evt_param* **server_cert**
Blufi callback param of ESP_BLUFI_EVENT_RECV_SERVER_CERT

struct *esp_blufi_cb_param_t*::*blufi_recv_client_pkey_evt_param* **client_pkey**
Blufi callback param of ESP_BLUFI_EVENT_RECV_CLIENT_PRIV_KEY

struct *esp_blufi_cb_param_t*::*blufi_recv_server_pkey_evt_param* **server_pkey**
Blufi callback param of ESP_BLUFI_EVENT_RECV_SERVER_PRIV_KEY

struct *esp_blufi_cb_param_t*::*blufi_get_error_evt_param* **report_error**
Blufi callback param of ESP_BLUFI_EVENT_REPORT_ERROR

struct *esp_blufi_cb_param_t*::*blufi_recv_custom_data_evt_param* **custom_data**
Blufi callback param of ESP_BLUFI_EVENT_RECV_CUSTOM_DATA

struct blufi_connect_evt_param
#include <esp_blufi_api.h> ESP_BLUFI_EVENT_CONNECT.

Public Members

esp_bd_addr_t **remote_bda**
Blufi Remote bluetooth device address

uint8_t **server_if**

server interface

uint16_t **conn_id**

Connection id

struct blufi_deinit_finish_evt_param

#include <esp_blufi_api.h> ESP_BLUFI_EVENT_DEINIT_FINISH.

Public Members

esp_blufi_deinit_state_t **state**

De-initial status

struct blufi_disconnect_evt_param

#include <esp_blufi_api.h> ESP_BLUFI_EVENT_DISCONNECT.

Public Members

esp_bd_addr_t **remote_bda**

Blufi Remote bluetooth device address

struct blufi_get_error_evt_param

#include <esp_blufi_api.h> ESP_BLUFI_EVENT_REPORT_ERROR.

Public Members

esp_blufi_error_state_t **state**

Blufi error state

struct blufi_init_finish_evt_param

#include <esp_blufi_api.h> ESP_BLUFI_EVENT_INIT_FINISH.

Public Members

esp_blufi_init_state_t **state**

Initial status

struct blufi_recv_ca_evt_param

#include <esp_blufi_api.h> ESP_BLUFI_EVENT_RECV_CA_CERT.

Public Members

uint8_t *cert

CA certificate point

int cert_len

CA certificate length

struct blufi_recv_client_cert_evt_param

#include <esp_blufi_api.h> ESP_BLUFI_EVENT_RECV_CLIENT_CERT

Public Members

uint8_t *cert

Client certificate point

int cert_len

Client certificate length

struct blufi_recv_client_pkey_evt_param

#include <esp_blufi_api.h> ESP_BLUFI_EVENT_RECV_CLIENT_PRIV_KEY

Public Members

uint8_t *pkey

Client Private Key point, if Client certificate not contain Key

int pkey_len

Client Private key length

struct blufi_recv_custom_data_evt_param

#include <esp_blufi_api.h> ESP_BLUFI_EVENT_RECV_CUSTOM_DATA.

Public Members

uint8_t *data

Custom data

uint32_t data_len

Custom data Length

struct blufi_recv_server_cert_evt_param

#include <esp_blufi_api.h> ESP_BLUFI_EVENT_RECV_SERVER_CERT

Public Members

uint8_t *cert

Client certificate point

int cert_len

Client certificate length

struct blufi_recv_server_pkey_evt_param

#include <esp_blufi_api.h> ESP_BLUFI_EVENT_RECV_SERVER_PRIV_KEY

Public Members

uint8_t *pkey

Client Private Key point, if Client certificate not contain Key

int pkey_len

Client Private key length

struct blufi_recv_softap_auth_mode_evt_param

#include <esp_blufi_api.h> ESP_BLUFI_EVENT_RECV_SOFTAP_AUTH_MODE.

Public Members

wifi_auth_mode_t auth_mode

Authentication mode

struct blufi_recv_softap_channel_evt_param

#include <esp_blufi_api.h> ESP_BLUFI_EVENT_RECV_SOFTAP_CHANNEL.

Public Members

uint8_t channel

Authentication mode

struct blufi_recv_softap_max_conn_num_evt_param

#include <esp_blufi_api.h> ESP_BLUFI_EVENT_RECV_SOFTAP_MAX_CONN_NUM.

Public Members

int max_conn_num

SSID

struct blufi_recv_softap_passwd_evt_param

#include <esp_blufi_api.h> ESP_BLUFI_EVENT_RECV_SOFTAP_PASSWD.

Public Members

uint8_t *passwd
Password

int passwd_len
Password Length

struct blufi_recv_softap_ssid_evt_param
#include <esp_blufi_api.h> ESP_BLUFI_EVENT_RECV_SOFTAP_SSID.

Public Members

uint8_t *ssid
SSID

int ssid_len
SSID length

struct blufi_recv_sta_bssid_evt_param
#include <esp_blufi_api.h> ESP_BLUFI_EVENT_RECV_STA_BSSID.

Public Members

uint8_t bssid[6]
BSSID

struct blufi_recv_sta_passwd_evt_param
#include <esp_blufi_api.h> ESP_BLUFI_EVENT_RECV_STA_PASSWD.

Public Members

uint8_t *passwd
Password

int passwd_len
Password Length

struct blufi_recv_sta_ssid_evt_param
#include <esp_blufi_api.h> ESP_BLUFI_EVENT_RECV_STA_SSID.

Public Members

uint8_t *ssid
SSID

int **ssid_len**

SSID length

struct blufi_recv_username_evt_param

#include <esp_blufi_api.h> ESP_BLUFI_EVENT_RECV_USERNAME.

Public Members

uint8_t ***name**

Username point

int **name_len**

Username length

struct blufi_set_wifi_mode_evt_param

#include <esp_blufi_api.h> ESP_BLUFI_EVENT_SET_WIFI_MODE.

Public Members

wifi_mode_t **op_mode**

Wifi operation mode

Structures

struct esp_blufi_extra_info_t

BLUFI extra information structure.

Public Members

uint8_t **sta_bssid**[6]

BSSID of station interface

bool **sta_bssid_set**

is BSSID of station interface set

uint8_t ***sta_ssid**

SSID of station interface

int **sta_ssid_len**

length of SSID of station interface

uint8_t ***sta_passwd**

password of station interface

int **sta_passwd_len**

length of password of station interface

uint8_t *softap_ssid
SSID of softap interface

int softap_ssid_len
length of SSID of softap interface

uint8_t *softap_passwd
password of station interface

int softap_passwd_len
length of password of station interface

uint8_t softap_authmode
authentication mode of softap interface

bool softap_authmode_set
is authentication mode of softap interface set

uint8_t softap_max_conn_num
max connection number of softap interface

bool softap_max_conn_num_set
is max connection number of softap interface set

uint8_t softap_channel
channel of softap interface

bool softap_channel_set
is channel of softap interface set

struct esp_blufi_ap_record_t
Description of an WiFi AP.

Public Members

uint8_t ssid[33]
SSID of AP

int8_t rssi
signal strength of AP

struct esp_blufi_callbacks_t
BLUFI callback functions type.

Public Members

esp_blufi_event_cb_t event_cb
BLUFI event callback

esp_blufi_negotiate_data_handler_t **negotiate_data_handler**

BLUFI negotiate data function for negotiate share key

esp_blufi_encrypt_func_t **encrypt_func**

BLUFI encrypt data function with share key generated by negotiate_data_handler

esp_blufi_decrypt_func_t **decrypt_func**

BLUFI decrypt data function with share key generated by negotiate_data_handler

esp_blufi_checksum_func_t **checksum_func**

BLUFI check sum function (FCS)

Type Definitions

typedef void (***esp_blufi_event_cb_t**)(*esp_blufi_cb_event_t* event, *esp_blufi_cb_param_t* *param)

BLUFI event callback function type.

Parameters

- `event`: : Event type
- `param`: : Point to callback parameter, currently is union type

typedef void (***esp_blufi_negotiate_data_handler_t**)(uint8_t *data, int len, uint8_t **output_data, int *output_len, bool *need_free)

BLUFI negotiate data handler.

Parameters

- `data`: : data from phone
- `len`: : length of data from phone
- `output_data`: : data want to send to phone
- `output_len`: : length of data want to send to phone
- `need_free`: : output reporting if memory needs to be freed or not *

typedef int (***esp_blufi_encrypt_func_t**)(uint8_t iv8, uint8_t *crypt_data, int crypt_len)

BLUFI encrypt the data after negotiate a share key.

Return Nonnegative number is encrypted length, if error, return negative number;

Parameters

- `iv8`: : initial vector(8bit), normally, blufi core will input packet sequence number

- `crypt_data`: : plain text and encrypted data, the encrypt function must support autochthonous encrypt
- `crypt_len`: : length of plain text

typedef int (***esp_blufi_decrypt_func_t**)(uint8_t iv8, uint8_t *crypt_data, int crypt_len)

BLUFI decrypt the data after negotiate a share key.

Return Nonnegative number is decrypted length, if error, return negative number;

Parameters

- `iv8`: : initial vector(8bit), normally, blufi core will input packet sequence number
- `crypt_data`: : encrypted data and plain text, the encrypt function must support autochthonous decrypt
- `crypt_len`: : length of encrypted text

typedef uint16_t (***esp_blufi_checksum_func_t**)(uint8_t iv8, uint8_t *data, int len)

BLUFI checksum.

Parameters

- `iv8`: : initial vector(8bit), normally, blufi core will input packet sequence number
- `data`: : data need to checksum
- `len`: : length of data

Enumerations

enum esp_blufi_cb_event_t

Values:

`ESP_BLUFI_EVENT_INIT_FINISH` = 0

`ESP_BLUFI_EVENT_DEINIT_FINISH`

`ESP_BLUFI_EVENT_SET_WIFI_OPMODE`

`ESP_BLUFI_EVENT_BLE_CONNECT`

`ESP_BLUFI_EVENT_BLE_DISCONNECT`

`ESP_BLUFI_EVENT_REQ_CONNECT_TO_AP`

`ESP_BLUFI_EVENT_REQ_DISCONNECT_FROM_AP`

`ESP_BLUFI_EVENT_GET_WIFI_STATUS`

`ESP_BLUFI_EVENT_DEAUTHENTICATE_STA`

ESP_BLUFI_EVENT_RECV_STA_BSSID

ESP_BLUFI_EVENT_RECV_STA_SSID

ESP_BLUFI_EVENT_RECV_STA_PASSWD

ESP_BLUFI_EVENT_RECV_SOFTAP_SSID

ESP_BLUFI_EVENT_RECV_SOFTAP_PASSWD

ESP_BLUFI_EVENT_RECV_SOFTAP_MAX_CONN_NUM

ESP_BLUFI_EVENT_RECV_SOFTAP_AUTH_MODE

ESP_BLUFI_EVENT_RECV_SOFTAP_CHANNEL

ESP_BLUFI_EVENT_RECV_USERNAME

ESP_BLUFI_EVENT_RECV_CA_CERT

ESP_BLUFI_EVENT_RECV_CLIENT_CERT

ESP_BLUFI_EVENT_RECV_SERVER_CERT

ESP_BLUFI_EVENT_RECV_CLIENT_PRIV_KEY

ESP_BLUFI_EVENT_RECV_SERVER_PRIV_KEY

ESP_BLUFI_EVENT_RECV_SLAVE_DISCONNECT_BLE

ESP_BLUFI_EVENT_GET_WIFI_LIST

ESP_BLUFI_EVENT_REPORT_ERROR

ESP_BLUFI_EVENT_RECV_CUSTOM_DATA

enum esp_blufi_sta_conn_state_t

BLUFI config status.

Values:

ESP_BLUFI_STA_CONN_SUCCESS = 0x00

ESP_BLUFI_STA_CONN_FAIL = 0x01

enum esp_blufi_init_state_t

BLUFI init status.

Values:

ESP_BLUFI_INIT_OK = 0

ESP_BLUFI_INIT_FAILED

enum esp_blufi_deinit_state_t

BLUFI deinit status.

Values:

ESP_BLUFI_DEINIT_OK = 0

ESP_BLUFI_DEINIT_FAILED

enum esp_blufi_error_state_t

Values:

ESP_BLUFI_SEQUENCE_ERROR = 0

ESP_BLUFI_CHECKSUM_ERROR

ESP_BLUFI_DECRYPT_ERROR

ESP_BLUFI_ENCRYPT_ERROR

ESP_BLUFI_INIT_SECURITY_ERROR

ESP_BLUFI_DH_MALLOC_ERROR

ESP_BLUFI_DH_PARAM_ERROR

ESP_BLUFI_READ_PARAM_ERROR

ESP_BLUFI_MAKE_PUBLIC_ERROR

ESP_BLUFI_DATA_FORMAT_ERROR

3.1.4 CLASSIC BT

CLASSIC BLUETOOTH GAP API

Overview

Instructions

Application Example

Instructions

API Reference

Header File

- bt/bluedroid/api/include/api/esp_gap_bt_api.h

Functions

uint32_t **esp_bt_gap_get_cod_srvc**(uint32_t *cod*)
get major service field of COD

Return major service bits

Parameters

- `cod`: Class of Device

uint32_t **esp_bt_gap_get_cod_major_dev**(uint32_t *cod*)
get major device field of COD

Return major device bits

Parameters

- `cod`: Class of Device

uint32_t **esp_bt_gap_get_cod_minor_dev**(uint32_t *cod*)
get minor service field of COD

Return minor service bits

Parameters

- `cod`: Class of Device

uint32_t **esp_bt_gap_get_cod_format_type**(uint32_t *cod*)
get format type of COD

Return format type

Parameters

- `cod`: Class of Device

bool **esp_bt_gap_is_valid_cod**(uint32_t *cod*)
decide the integrity of COD

Return

- true if cod is valid
- false otherise

Parameters

- `cod`: Class of Device

esp_err_t **esp_bt_gap_register_callback**(*esp_bt_gap_cb_t callback*)

register callback function. This function should be called after esp_bluedroid_enable() completes successfully

Return

- ESP_OK : Succeed
- ESP_FAIL: others

esp_err_t **esp_bt_gap_set_scan_mode**(*esp_bt_scan_mode_t mode*)

Set discoverability and connectability mode for legacy bluetooth. This function should be called after esp_bluedroid_enable() completes successfully.

Return

- ESP_OK : Succeed
- ESP_ERR_INVALID_ARG: if argument invalid
- ESP_ERR_INVALID_STATE: if bluetooth stack is not yet enabled
- ESP_FAIL: others

Parameters

- `mode`: : one of the enums of bt_scan_mode_t

esp_err_t **esp_bt_gap_start_discovery**(*esp_bt_inq_mode_t mode*, uint8_t *inq_len*, uint8_t *num_rsps*)

This function starts Inquiry and Name Discovery. It should be called after esp_bluedroid_enable() completes successfully. When Inquiry is halted and cached results do not contain device name, then Name Discovery will connect to the peer target to get the device name. esp_bt_gap_cb_t will be called with ESP_BT_GAP_DISC_STATE_CHANGED_EVT when Inquriry is started or Name Discovery is completed. esp_bt_gap_cb_t will be called with ESP_BT_GAP_DISC_RES_EVT each time the two types of discovery results are got.

Return

- ESP_OK : Succeed
- ESP_ERR_INVALID_STATE: if bluetooth stack is not yet enabled
- ESP_ERR_INVALID_ARG: if invalid parameters are provided
- ESP_FAIL: others

Parameters

- `mode`: - Inquiry mode

- `inq_len`: - Inquiry duration in 1.28 sec units, ranging from 0x01 to 0x30. This parameter only specifies the total duration of the Inquiry process,
  - when this time expires, Inquiry will be halted.
- `num_rsps`: - Number of responses that can be received before the Inquiry is halted, value 0 indicates an unlimited number of responses.

esp_err_t **esp_bt_gap_cancel_discovery**(void)

Cancel Inquiry and Name Discovery. This function should be called after esp_bluedroid_enable() completes successfully. esp_bt_gap_cb_t will be called with ESP_BT_GAP_DISC_STATE_CHANGED_EVT if Inquiry or Name Discovery is cancelled by calling this function.

Return

- ESP_OK : Succeed
- ESP_ERR_INVALID_STATE: if bluetooth stack is not yet enabled
- ESP_FAIL: others

esp_err_t **esp_bt_gap_get_remote_services**(*esp_bd_addr_t remote_bda*)

Start SDP to get remote services. This function should be called after esp_bluedroid_enable() completes successfully. esp_bt_gap_cb_t will is called with ESP_BT_GAP_RMT_SRVCS_EVT after service discovery ends.

Return

- ESP_OK : Succeed
- ESP_ERR_INVALID_STATE: if bluetooth stack is not yet enabled
- ESP_FAIL: others

esp_err_t **esp_bt_gap_get_remote_service_record**(*esp_bd_addr_t remote_bda*, *esp_bt_uuid_t *uuid*)

Start SDP to look up the service matching uuid on the remote device. This function should be called after esp_bluedroid_enable() completes successfully.

esp_bt_gap_cb_t will is called with ESP_BT_GAP_RMT_SRVC_REC_EVT after service discovery ends

Return

- ESP_OK : Succeed
- ESP_ERR_INVALID_STATE: if bluetooth stack is not yet enabled
- ESP_FAIL: others

uint8_t *esp_bt_gap_resolve_eir_data(uint8_t *eir, esp_bt_eir_type_t type, uint8_t *length)

This function is called to get EIR data for a specific type.

Return pointer of starting position of eir data excluding eir data type, NULL if not found

Parameters

- `eir`: - pointer of raw eir data to be resolved
- `type`: - specific EIR data type
- `length`: - return the length of EIR data excluding fields of length and data type

esp_err_t esp_bt_gap_set_cod(esp_bt_cod_t cod, esp_bt_cod_mode_t mode)

This function is called to set class of device. esp_bt_gap_cb_t will is called with ESP_BT_GAP_SET_COD_EVT after set COD ends Some profile have special restrictions on class of device, changes may cause these profile do not work.

Return

- ESP_OK : Succeed
- ESP_ERR_INVALID_STATE: if bluetooth stack is not yet enabled
- ESP_ERR_INVALID_ARG: if param is invalid
- ESP_FAIL: others

Parameters

- `cod`: - class of device
- `mode`: - setting mode

esp_err_t esp_bt_gap_get_cod(esp_bt_cod_t *cod)

This function is called to get class of device.

Return

- ESP_OK : Succeed
- ESP_FAIL: others

Parameters

- `cod`: - class of device

esp_err_t esp_bt_gap_read_rssi_delta(esp_bd_addr_t remote_addr)

This function is called to read RSSI delta by address after connected. The RSSI value returned by ESP_BT_GAP_READ_RSSI_DELTA_EVT.

Return

- ESP_OK : Succeed
- ESP_FAIL: others

Parameters

- `remote_addr`: - remote device address, corresponding to a certain connection handle.

esp_err_t **esp_bt_gap_remove_bond_device**(*esp_bd_addr_t bd_addr*)

Removes a device from the security database list of peer device.

Return - ESP_OK : success

- ESP_FAIL : failed

Parameters

- `bd_addr`: : BD address of the peer device

int **esp_bt_gap_get_bond_device_num**(void)

Get the device number from the security database list of peer device. It will return the device bonded number immediately.

Return - >= 0 : bonded devices number.

- ESP_FAIL : failed

esp_err_t **esp_bt_gap_get_bond_device_list**(int **dev_num*, *esp_bd_addr_t *dev_list*)

Get the device from the security database list of peer device. It will return the device bonded information immediately.

Return

- ESP_OK : Succeed
- ESP_ERR_INVALID_STATE: if bluetooth stack is not yet enabled
- ESP_FAIL: others

Parameters

- `dev_num`: Indicate the dev_list array(buffer) size as input. If dev_num is large enough, it means the actual number as output. Suggest that dev_num value equal to esp_ble_get_bond_device_num().
- `dev_list`: an array(buffer) of `esp_bd_addr_t` type. Use for storing the bonded devices address. The dev_list should be allocated by who call this API.

esp_err_t **esp_bt_gap_set_pin**(*esp_bt_pin_type_t pin_type*, uint8_t *pin_code_len*, *esp_bt_pin_code_t pin_code*)

Set pin type and default pin code for legacy pairing.

Return - ESP_OK : success

- ESP_ERR_INVALID_STATE: if bluetooth stack is not yet enabled
- other : failed

Parameters

- `pin_type`: Use variable or fixed pin. If pin_type is ESP_BT_PIN_TYPE_VARIABLE, pin_code and pin_code_len will be ignored, and ESP_BT_GAP_PIN_REQ_EVT will come when control requests for pin code. Else, will use fixed pin code and not callback to users.
- `pin_code_len`: Length of pin_code
- `pin_code`: Pin_code

esp_err_t **esp_bt_gap_pin_reply**(*esp_bd_addr_t bd_addr*, bool *accept*, uint8_t *pin_code_len*, *esp_bt_pin_code_t pin_code*)

Reply the pin_code to the peer device for legacy pairing when ESP_BT_GAP_PIN_REQ_EVT is coming.

Return - ESP_OK : success

- ESP_ERR_INVALID_STATE: if bluetooth stack is not yet enabled
- other : failed

Parameters

- `bd_addr`: BD address of the peer
- `accept`: Pin_code reply successful or declined.
- `pin_code_len`: Length of pin_code
- `pin_code`: Pin_code

esp_err_t **esp_bt_gap_set_security_param**(*esp_bt_sp_param_t param_type*, void **value*, uint8_t *len*)

Set a GAP security parameter value. Overrides the default value.

Return - ESP_OK : success

- ESP_ERR_INVALID_STATE: if bluetooth stack is not yet enabled
- other : failed

Parameters

- `param_type`: : the type of the param which is to be set
- `value`: : the param value
- `len`: : the length of the param value

esp_err_t **esp_bt_gap_ssp_passkey_reply**(*esp_bd_addr_t bd_addr*, bool *accept*, uint32_t *passkey*)

Reply the key value to the peer device in the legacy connection stage.

Return - ESP_OK : success

- ESP_ERR_INVALID_STATE: if bluetooth stack is not yet enabled
- other : failed

Parameters

- `bd_addr`: : BD address of the peer
- `accept`: : passkey entry successful or declined.
- `passkey`: : passkey value, must be a 6 digit number, can be lead by 0.

esp_err_t **esp_bt_gap_ssp_confirm_reply**(*esp_bd_addr_t bd_addr*, bool *accept*)

Reply the confirm value to the peer device in the legacy connection stage.

Return - ESP_OK : success

- ESP_ERR_INVALID_STATE: if bluetooth stack is not yet enabled
- other : failed

Parameters

- `bd_addr`: : BD address of the peer device
- `accept`: : numbers to compare are the same or different.

Unions

union esp_bt_gap_cb_param_t

#include <esp_gap_bt_api.h> A2DP state callback parameters.

Public Members

struct *esp_bt_gap_cb_param_t*::*disc_res_param* **disc_res**

discovery result parameter struct

struct *esp_bt_gap_cb_param_t*::*disc_state_changed_param* **disc_st_chg**

discovery state changed parameter struct

struct *esp_bt_gap_cb_param_t*::*rmt_srvcs_param* **rmt_srvcs**

services of remote device parameter struct

struct *esp_bt_gap_cb_param_t*::*rmt_srvc_rec_param* **rmt_srvc_rec**

specific service record from remote device parameter struct

struct *esp_bt_gap_cb_param_t*::*read_rssi_delta_param* **read_rssi_delta**

read rssi parameter struct

struct *esp_bt_gap_cb_param_t*::*auth_cmpl_param* **auth_cmpl**

authentication complete parameter struct

struct *esp_bt_gap_cb_param_t*::*pin_req_param* **pin_req**

pin request parameter struct

struct *esp_bt_gap_cb_param_t*::*cfm_req_param* **cfm_req**

confirm request parameter struct

struct *esp_bt_gap_cb_param_t*::*key_notif_param* **key_notif**

passkey notif parameter struct

struct *esp_bt_gap_cb_param_t*::*key_req_param* **key_req**

passkey request parameter struct

struct *esp_bt_gap_cb_param_t*::*bt_remove_bond_dev_cmpl_evt_param* **remove_bond_dev_cmpl**

Event parameter of ESP_BT_GAP_REMOVE_BOND_DEV_COMPLETE_EVT

struct auth_cmpl_param

#include <esp_gap_bt_api.h> ESP_BT_GAP_AUTH_CMPL_EVT.

Public Members

esp_bd_addr_t **bda**

remote bluetooth device address

esp_bt_status_t **stat**

authentication complete status

uint8_t **device_name**[**ESP_BT_GAP_MAX_BDNAME_LEN** + 1]

device name

struct bt_remove_bond_dev_cmpl_evt_param

#include <esp_gap_bt_api.h> ESP_BT_GAP_REMOVE_BOND_DEV_COMPLETE_EVT.

Public Members

esp_bd_addr_t **bda**

remote bluetooth device address

esp_bt_status_t **status**

Indicate the remove bond device operation success status

struct cfm_req_param

#include <esp_gap_bt_api.h> ESP_BT_GAP_CFM_REQ_EVT.

Public Members

esp_bd_addr_t **bda**
remote bluetooth device address

uint32_t **num_val**
the numeric value for comparison.

struct disc_res_param
#include <esp_gap_bt_api.h> ESP_BT_GAP_DISC_RES_EVT.

Public Members

esp_bd_addr_t **bda**
remote bluetooth device address

int **num_prop**
number of properties got

esp_bt_gap_dev_prop_t ***prop**
properties discovered from the new device

struct disc_state_changed_param
#include <esp_gap_bt_api.h> ESP_BT_GAP_DISC_STATE_CHANGED_EVT.

Public Members

esp_bt_gap_discovery_state_t **state**
discovery state

struct key_notif_param
#include <esp_gap_bt_api.h> ESP_BT_GAP_KEY_NOTIF_EVT.

Public Members

esp_bd_addr_t **bda**
remote bluetooth device address

uint32_t **passkey**
the numeric value for passkey entry.

struct key_req_param
#include <esp_gap_bt_api.h> ESP_BT_GAP_KEY_REQ_EVT.

Public Members

esp_bd_addr_t **bda**
remote bluetooth device address

struct pin_req_param
#include <esp_gap_bt_api.h> ESP_BT_GAP_PIN_REQ_EVT.

Public Members

esp_bd_addr_t **bda**
remote bluetooth device address

bool **min_16_digit**
TRUE if the pin returned must be at least 16 digits

struct read_rssi_delta_param
#include <esp_gap_bt_api.h> ESP_BT_GAP_READ_RSSI_DELTA_EVT *.

Public Members

esp_bd_addr_t **bda**
remote bluetooth device address

esp_bt_status_t **stat**
read rssi status

int8_t **rssi_delta**
rssi delta value range -128 ~127, The value zero indicates that the RSSI is inside the Golden Receive Power Range, the Golden Receive Power Range is from ESP_BT_GAP_RSSI_LOW_THRLD to ESP_BT_GAP_RSSI_HIGH_THRLD

struct rmt_srvc_rec_param
#include <esp_gap_bt_api.h> ESP_BT_GAP_RMT_SRVC_REC_EVT.

Public Members

esp_bd_addr_t **bda**
remote bluetooth device address

esp_bt_status_t **stat**
service search status

struct rmt_srvcs_param
#include <esp_gap_bt_api.h> ESP_BT_GAP_RMT_SRVCS_EVT.

Public Members

esp_bd_addr_t **bda**
remote bluetooth device address

esp_bt_status_t **stat**
service search status

int **num_uuids**
number of UUID in uuid_list

esp_bt_uuid_t ***uuid_list**
list of service UUIDs of remote device

Structures

struct esp_bt_cod_t
Class of device.

Public Members

uint32_t **reserved_2**
undefined

uint32_t **minor**
minor class

uint32_t **major**
major class

uint32_t **service**
service class

uint32_t **reserved_8**
undefined

struct esp_bt_gap_dev_prop_t
Bluetooth Device Property Descriptor.

Public Members

esp_bt_gap_dev_prop_type_t **type**
device property type

int **len**
device property value length

void *val
: device property value

Macros

ESP_BT_GAP_RSSI_HIGH_THRLD
: RSSI threshold.

  High RSSI threshold

ESP_BT_GAP_RSSI_LOW_THRLD
: Low RSSI threshold

ESP_BT_GAP_MAX_BDNAME_LEN
: Maximum bytes of Bluetooth device name.

ESP_BT_GAP_EIR_DATA_LEN
: Maximum size of EIR Significant part.

ESP_BT_PIN_CODE_LEN
: Max pin code length

ESP_BT_IO_CAP_OUT

ESP_BT_IO_CAP_IO

ESP_BT_IO_CAP_IN

ESP_BT_IO_CAP_NONE

ESP_BT_COD_SRVC_BIT_MASK
: Bits of major service class field.

  Major service bit mask

ESP_BT_COD_SRVC_BIT_OFFSET
: Major service bit offset

ESP_BT_COD_MAJOR_DEV_BIT_MASK
: Bits of major device class field.

  Major device bit mask

ESP_BT_COD_MAJOR_DEV_BIT_OFFSET
: Major device bit offset

ESP_BT_COD_MINOR_DEV_BIT_MASK
: Bits of minor device class field.

  Minor device bit mask

ESP_BT_COD_MINOR_DEV_BIT_OFFSET
: Minor device bit offset

ESP_BT_COD_FORMAT_TYPE_BIT_MASK
: Bits of format type.

  Format type bit mask

ESP_BT_COD_FORMAT_TYPE_BIT_OFFSET
: Format type bit offset

ESP_BT_COD_FORMAT_TYPE_1
: Class of device format type 1.

ESP_BT_GAP_MIN_INQ_LEN
: Minimum and Maximum inquiry length Minimum inquiry duration, unit is 1.28s

ESP_BT_GAP_MAX_INQ_LEN
: Maximum inquiry duration, unit is 1.28s

Type Definitions

typedef uint8_t **esp_bt_pin_code_t**[ESP_BT_PIN_CODE_LEN]
: Pin Code (upto 128 bits) MSB is 0

typedef uint8_t **esp_bt_io_cap_t**
: combination of the io capability

typedef void (***esp_bt_gap_cb_t**)(*esp_bt_gap_cb_event_t* event, *esp_bt_gap_cb_param_t* *param)
: bluetooth GAP callback function type

  Parameters

  - event: : Event type
  - param: : Pointer to callback parameter

Enumerations

enum esp_bt_cod_mode_t
: class of device settings

  Values:

  ESP_BT_SET_COD_MAJOR_MINOR = 0x01
  : overwrite major, minor class

  ESP_BT_SET_COD_SERVICE_CLASS = 0x02
  : set the bits in the input, the current bit will remain

ESP_BT_CLR_COD_SERVICE_CLASS = 0x04

clear the bits in the input, others will remain

ESP_BT_SET_COD_ALL = 0x08

overwrite major, minor, set the bits in service class

ESP_BT_INIT_COD = 0x0a

overwrite major, minor, and service class

enum esp_bt_scan_mode_t

Discoverability and Connectability mode.

Values:

ESP_BT_SCAN_MODE_NONE = 0

Neither discoverable nor connectable

ESP_BT_SCAN_MODE_CONNECTABLE

Connectable but not discoverable

ESP_BT_SCAN_MODE_CONNECTABLE_DISCOVERABLE

both discoverable and connectable

enum esp_bt_gap_dev_prop_type_t

Bluetooth Device Property type.

Values:

ESP_BT_GAP_DEV_PROP_BDNAME = 1

Bluetooth device name, value type is int8_t []

ESP_BT_GAP_DEV_PROP_COD

Class of Device, value type is uint32_t

ESP_BT_GAP_DEV_PROP_RSSI

Received Signal strength Indication, value type is int8_t, ranging from -128 to 127

ESP_BT_GAP_DEV_PROP_EIR

Extended Inquiry Response, value type is uint8_t []

enum esp_bt_eir_type_t

Extended Inquiry Response data type.

Values:

ESP_BT_EIR_TYPE_FLAGS = 0x01

Flag with information such as BR/EDR and LE support

ESP_BT_EIR_TYPE_INCMPL_16BITS_UUID = 0x02

Incomplete list of 16-bit service UUIDs

ESP_BT_EIR_TYPE_CMPL_16BITS_UUID = 0x03

Complete list of 16-bit service UUIDs

ESP_BT_EIR_TYPE_INCMPL_32BITS_UUID = 0x04
Incomplete list of 32-bit service UUIDs

ESP_BT_EIR_TYPE_CMPL_32BITS_UUID = 0x05
Complete list of 32-bit service UUIDs

ESP_BT_EIR_TYPE_INCMPL_128BITS_UUID = 0x06
Incomplete list of 128-bit service UUIDs

ESP_BT_EIR_TYPE_CMPL_128BITS_UUID = 0x07
Complete list of 128-bit service UUIDs

ESP_BT_EIR_TYPE_SHORT_LOCAL_NAME = 0x08
Shortened Local Name

ESP_BT_EIR_TYPE_CMPL_LOCAL_NAME = 0x09
Complete Local Name

ESP_BT_EIR_TYPE_TX_POWER_LEVEL = 0x0a
Tx power level, value is 1 octet ranging from -127 to 127, unit is dBm

ESP_BT_EIR_TYPE_MANU_SPECIFIC = 0xff
Manufacturer specific data

enum esp_bt_cod_srvc_t
Major service class field of Class of Device, mutiple bits can be set.

Values:

ESP_BT_COD_SRVC_NONE = 0
None indicates an invalid value

ESP_BT_COD_SRVC_LMTD_DISCOVER = 0x1
Limited Discoverable Mode

ESP_BT_COD_SRVC_POSITIONING = 0x8
Positioning (Location identification)

ESP_BT_COD_SRVC_NETWORKING = 0x10
Networking, e.g. LAN, Ad hoc

ESP_BT_COD_SRVC_RENDERING = 0x20
Rendering, e.g. Printing, Speakers

ESP_BT_COD_SRVC_CAPTURING = 0x40
Capturing, e.g. Scanner, Microphone

ESP_BT_COD_SRVC_OBJ_TRANSFER = 0x80
Object Transfer, e.g. v-Inbox, v-Folder

ESP_BT_COD_SRVC_AUDIO = 0x100
Audio, e.g. Speaker, Microphone, Headset service

`ESP_BT_COD_SRVC_TELEPHONY` = 0x200

Telephony, e.g. Cordless telephony, Modem, Headset service

`ESP_BT_COD_SRVC_INFORMATION` = 0x400

Information, e.g., WEB-server, WAP-server

enum esp_bt_pin_type_t

Values:

`ESP_BT_PIN_TYPE_VARIABLE` = 0

Refer to BTM_PIN_TYPE_VARIABLE

`ESP_BT_PIN_TYPE_FIXED` = 1

Refer to BTM_PIN_TYPE_FIXED

enum esp_bt_sp_param_t

Values:

`ESP_BT_SP_IOCAP_MODE` = 0

Set IO mode

enum esp_bt_cod_major_dev_t

Major device class field of Class of Device.

Values:

`ESP_BT_COD_MAJOR_DEV_MISC` = 0

Miscellaneous

`ESP_BT_COD_MAJOR_DEV_COMPUTER` = 1

Computer

`ESP_BT_COD_MAJOR_DEV_PHONE` = 2

Phone(cellular, cordless, pay phone, modem

`ESP_BT_COD_MAJOR_DEV_LAN_NAP` = 3

LAN, Network Access Point

`ESP_BT_COD_MAJOR_DEV_AV` = 4

Audio/Video(headset, speaker, stereo, video display, VCR

`ESP_BT_COD_MAJOR_DEV_PERIPHERAL` = 5

Peripheral(mouse, joystick, keyboard)

`ESP_BT_COD_MAJOR_DEV_IMAGING` = 6

Imaging(printer, scanner, camera, display

`ESP_BT_COD_MAJOR_DEV_WEARABLE` = 7

Wearable

`ESP_BT_COD_MAJOR_DEV_TOY` = 8

Toy

ESP_BT_COD_MAJOR_DEV_HEALTH = 9

Health

ESP_BT_COD_MAJOR_DEV_UNCATEGORIZED = 31

Uncategorized: device not specified

enum esp_bt_gap_discovery_state_t

Bluetooth Device Discovery state

Values:

ESP_BT_GAP_DISCOVERY_STOPPED

device discovery stopped

ESP_BT_GAP_DISCOVERY_STARTED

device discovery started

enum esp_bt_gap_cb_event_t

BT GAP callback events.

Values:

ESP_BT_GAP_DISC_RES_EVT = 0

device discovery result event

ESP_BT_GAP_DISC_STATE_CHANGED_EVT

discovery state changed event

ESP_BT_GAP_RMT_SRVCS_EVT

get remote services event

ESP_BT_GAP_RMT_SRVC_REC_EVT

get remote service record event

ESP_BT_GAP_AUTH_CMPL_EVT

AUTH complete event

ESP_BT_GAP_PIN_REQ_EVT

Legacy Pairing Pin code request

ESP_BT_GAP_CFM_REQ_EVT

Simple Pairing User Confirmation request.

ESP_BT_GAP_KEY_NOTIF_EVT

Simple Pairing Passkey Notification

ESP_BT_GAP_KEY_REQ_EVT

Simple Pairing Passkey request

ESP_BT_GAP_READ_RSSI_DELTA_EVT

read rssi event

`ESP_BT_GAP_REMOVE_BOND_DEV_COMPLETE_EVT`
remove bond device complete event

`ESP_BT_GAP_EVT_MAX`

`enum esp_bt_inq_mode_t`
Inquiry Mode

Values:

`ESP_BT_INQ_MODE_GENERAL_INQUIRY`
General inquiry mode

`ESP_BT_INQ_MODE_LIMITED_INQUIRY`
Limited inquiry mode

Bluetooth A2DP API

Overview

Instructions

Application Example

Check bluetooth folder in ESP-IDF examples, which contains the following application:

- This is a A2DP sink client demo. This demo can be discovered and connected by A2DP source device and receive the audio stream from remote device - bluetooth/a2dp_sink

API Reference

Header File

- bt/bluedroid/api/include/api/esp_a2dp_api.h

Functions

esp_err_t `esp_a2d_register_callback`(*esp_a2d_cb_t callback*)
Register application callback function to A2DP module. This function should be called only after esp_bluedroid_enable() completes successfully, used by both A2DP source and sink.

Return

- ESP_OK: success
- ESP_INVALID_STATE: if bluetooth stack is not yet enabled

- ESP_FAIL: if callback is a NULL function pointer

Parameters

- `callback`: A2DP event callback function

esp_err_t **esp_a2d_sink_register_data_callback**(*esp_a2d_sink_data_cb_t callback*)

Register A2DP sink data output function; For now the output is PCM data stream decoded from SBC format. This function should be called only after esp_bluedroid_enable() completes successfully, used only by A2DP sink. The callback is invoked in the context of A2DP sink task whose stack size is configurable through menuconfig.

Return

- ESP_OK: success
- ESP_INVALID_STATE: if bluetooth stack is not yet enabled
- ESP_FAIL: if callback is a NULL function pointer

Parameters

- `callback`: A2DP sink data callback function

esp_err_t **esp_a2d_sink_init**(void)

Initialize the bluetooth A2DP sink module. This function should be called after esp_bluedroid_enable() completes successfully, and ESP_A2D_PROF_STATE_EVT with ESP_A2D_INIT_SUCCESS will reported to the APP layer.

Return

- ESP_OK: if the initialization request is sent successfully
- ESP_INVALID_STATE: if bluetooth stack is not yet enabled
- ESP_FAIL: others

esp_err_t **esp_a2d_sink_deinit**(void)

De-initialize for A2DP sink module. This function should be called only after esp_bluedroid_enable() completes successfully, and ESP_A2D_PROF_STATE_EVT with ESP_A2D_DEINIT_SUCCESS will reported to APP layer.

Return

- ESP_OK: success
- ESP_INVALID_STATE: if bluetooth stack is not yet enabled
- ESP_FAIL: others

esp_err_t **esp_a2d_sink_connect**(*esp_bd_addr_t remote_bda*)

Connect to remote bluetooth A2DP source device, must after esp_a2d_sink_init()

Return

- ESP_OK: connect request is sent to lower layer
- ESP_INVALID_STATE: if bluetooth stack is not yet enabled
- ESP_FAIL: others

Parameters

- `remote_bda`: remote bluetooth device address

esp_err_t **esp_a2d_sink_disconnect**(*esp_bd_addr_t remote_bda*)

Disconnect from the remote A2DP source device.

Return

- ESP_OK: disconnect request is sent to lower layer
- ESP_INVALID_STATE: if bluetooth stack is not yet enabled
- ESP_FAIL: others

Parameters

- `remote_bda`: remote bluetooth device address

esp_err_t **esp_a2d_media_ctrl**(*esp_a2d_media_ctrl_t ctrl*)

media control commands; this API can be used for both A2DP sink and source

Return

- ESP_OK: control command is sent to lower layer
- ESP_INVALID_STATE: if bluetooth stack is not yet enabled
- ESP_FAIL: others

Parameters

- `ctrl`: control commands for A2DP data channel

esp_err_t **esp_a2d_source_init**(void)

Initialize the bluetooth A2DP source module. This function should be called after esp_bluedroid_enable() completes successfully, and ESP_A2D_PROF_STATE_EVT with ESP_A2D_INIT_SUCCESS will reported to the APP layer.

Return

- ESP_OK: if the initialization request is sent successfully

- ESP_INVALID_STATE: if bluetooth stack is not yet enabled
- ESP_FAIL: others

esp_err_t **esp_a2d_source_deinit**(void)

De-initialize for A2DP source module. This function should be called only after esp_bluedroid_enable() completes successfully, and ESP_A2D_PROF_STATE_EVT with ESP_A2D_DEINIT_SUCCESS will reported to APP layer.

Return

- ESP_OK: success
- ESP_INVALID_STATE: if bluetooth stack is not yet enabled
- ESP_FAIL: others

esp_err_t **esp_a2d_source_register_data_callback**(*esp_a2d_source_data_cb_t callback*)

Register A2DP source data input function; For now the input is PCM data stream. This function should be called only after esp_bluedroid_enable() completes successfully. The callback is invoked in the context of A2DP source task whose stack size is configurable through menuconfig.

Return

- ESP_OK: success
- ESP_INVALID_STATE: if bluetooth stack is not yet enabled
- ESP_FAIL: if callback is a NULL function pointer

Parameters

- `callback`: A2DP source data callback function

esp_err_t **esp_a2d_source_connect**(*esp_bd_addr_t remote_bda*)

Connect to remote A2DP sink device, must after esp_a2d_source_init()

Return

- ESP_OK: connect request is sent to lower layer
- ESP_INVALID_STATE: if bluetooth stack is not yet enabled
- ESP_FAIL: others

Parameters

- `remote_bda`: remote bluetooth device address

esp_err_t **esp_a2d_source_disconnect**(*esp_bd_addr_t remote_bda*)

Disconnect from the remote A2DP sink device.

Return

- ESP_OK: disconnect request is sent to lower layer
- ESP_INVALID_STATE: if bluetooth stack is not yet enabled
- ESP_FAIL: others

Parameters

- `remote_bda`: remote bluetooth device address

Unions

`union esp_a2d_cb_param_t`

#include <esp_a2dp_api.h> A2DP state callback parameters.

Public Members

`struct` *esp_a2d_cb_param_t*::*a2d_conn_stat_param* `conn_stat`

A2DP connection status

`struct` *esp_a2d_cb_param_t*::*a2d_audio_stat_param* `audio_stat`

audio stream playing state

`struct` *esp_a2d_cb_param_t*::*a2d_audio_cfg_param* `audio_cfg`

media codec configuration information

`struct` *esp_a2d_cb_param_t*::*media_ctrl_stat_param* `media_ctrl_stat`

status in acknowledgement to media control commands

`struct` *esp_a2d_cb_param_t*::*a2d_prof_stat_param* `a2d_prof_stat`

status to indicate a2d prof init or deinit

`struct a2d_audio_cfg_param`

#include <esp_a2dp_api.h> ESP_A2D_AUDIO_CFG_EVT.

Public Members

esp_bd_addr_t `remote_bda`

remote bluetooth device address

esp_a2d_mcc_t `mcc`

A2DP media codec capability information

`struct a2d_audio_stat_param`

#include <esp_a2dp_api.h> ESP_A2D_AUDIO_STATE_EVT.

Public Members

esp_a2d_audio_state_t **state**
one of the values from esp_a2d_audio_state_t

esp_bd_addr_t **remote_bda**
remote bluetooth device address

struct a2d_conn_stat_param
#include <esp_a2dp_api.h> ESP_A2D_CONNECTION_STATE_EVT.

Public Members

esp_a2d_connection_state_t **state**
one of values from esp_a2d_connection_state_t

esp_bd_addr_t **remote_bda**
remote bluetooth device address

esp_a2d_disc_rsn_t **disc_rsn**
reason of disconnection for "DISCONNECTED"

struct a2d_prof_stat_param
#include <esp_a2dp_api.h> ESP_A2D_PROF_STATE_EVT.

Public Members

esp_a2d_init_state_t **init_state**
a2dp profile state param

struct media_ctrl_stat_param
#include <esp_a2dp_api.h> ESP_A2D_MEDIA_CTRL_ACK_EVT.

Public Members

esp_a2d_media_ctrl_t **cmd**
media control commands to acknowledge

esp_a2d_media_ctrl_ack_t **status**
acknowledgement to media control commands

Structures

struct esp_a2d_mcc_t
A2DP media codec capabilities union.

Public Members

esp_a2d_mct_t **type**
A2DP media codec type

union *esp_a2d_mcc_t*::[**anonymous**] **cie**
A2DP codec information element

Macros

ESP_A2D_MCT_SBC
Media codec types supported by A2DP.

SBC

ESP_A2D_MCT_M12
MPEG-1, 2 Audio

ESP_A2D_MCT_M24
MPEG-2, 4 AAC

ESP_A2D_MCT_ATRAC
ATRAC family

ESP_A2D_MCT_NON_A2DP

ESP_A2D_CIE_LEN_SBC

ESP_A2D_CIE_LEN_M12

ESP_A2D_CIE_LEN_M24

ESP_A2D_CIE_LEN_ATRAC

Type Definitions

typedef uint8_t **esp_a2d_mct_t**

typedef void (***esp_a2d_cb_t**)(*esp_a2d_cb_event_t* event, *esp_a2d_cb_param_t* *param)
A2DP profile callback function type.

Parameters

- `event`: : Event type
- `param`: : Pointer to callback parameter

typedef void (***esp_a2d_sink_data_cb_t**)(**const** uint8_t *buf, uint32_t len)
A2DP profile data callback function.

Parameters

- `buf`: : data received from A2DP source device and is PCM format decoder from SBC decoder; buf references to a static memory block and can be overwritten by upcoming data
- `len`: : size(in bytes) in buf

`typedef` int32_t (*`esp_a2d_source_data_cb_t`)(uint8_t *buf, int32_t len)

A2DP source data read callback function.

Return size of bytes read successfully, if the argument len is -1, this value is ignored.

Parameters

- `buf`: : buffer to be filled with PCM data stream from higher layer
- `len`: : size(in bytes) of data block to be copied to buf. -1 is an indication to user that data buffer shall be flushed

Enumerations

`enum esp_a2d_init_state_t`

Bluetooth A2DP Initiation states.

Values:

`ESP_A2D_DEINIT_SUCCESS` = 0

A2DP profile deinit successful event

`ESP_A2D_INIT_SUCCESS`

A2DP profile init successful event

`enum esp_a2d_connection_state_t`

Bluetooth A2DP connection states.

Values:

`ESP_A2D_CONNECTION_STATE_DISCONNECTED` = 0

connection released

`ESP_A2D_CONNECTION_STATE_CONNECTING`

connecting remote device

`ESP_A2D_CONNECTION_STATE_CONNECTED`

connection established

`ESP_A2D_CONNECTION_STATE_DISCONNECTING`

disconnecting remote device

`enum esp_a2d_disc_rsn_t`

Bluetooth A2DP disconnection reason.

Values:

ESP_A2D_DISC_RSN_NORMAL = 0

Finished disconnection that is initiated by local or remote device

ESP_A2D_DISC_RSN_ABNORMAL

Abnormal disconnection caused by signal loss

enum esp_a2d_audio_state_t

Bluetooth A2DP datapath states.

Values:

ESP_A2D_AUDIO_STATE_REMOTE_SUSPEND = 0

audio stream datapath suspended by remote device

ESP_A2D_AUDIO_STATE_STOPPED

audio stream datapath stopped

ESP_A2D_AUDIO_STATE_STARTED

audio stream datapath started

enum esp_a2d_media_ctrl_ack_t

A2DP media control command acknowledgement code.

Values:

ESP_A2D_MEDIA_CTRL_ACK_SUCCESS = 0

media control command is acknowledged with success

ESP_A2D_MEDIA_CTRL_ACK_FAILURE

media control command is acknowledged with failure

ESP_A2D_MEDIA_CTRL_ACK_BUSY

media control command is rejected, as previous command is not yet acknowledged

enum esp_a2d_media_ctrl_t

A2DP media control commands.

Values:

ESP_A2D_MEDIA_CTRL_NONE = 0

Not for application use, use inside stack only.

ESP_A2D_MEDIA_CTRL_CHECK_SRC_RDY

check whether AVDTP is connected, only used in A2DP source

ESP_A2D_MEDIA_CTRL_START

command to set up media transmission channel

ESP_A2D_MEDIA_CTRL_STOP

command to stop media transmission

`ESP_A2D_MEDIA_CTRL_SUSPEND`
command to suspend media transmission

`enum esp_a2d_cb_event_t`
A2DP callback events.

Values:

`ESP_A2D_CONNECTION_STATE_EVT` = 0
connection state changed event

`ESP_A2D_AUDIO_STATE_EVT`
audio stream transmission state changed event

`ESP_A2D_AUDIO_CFG_EVT`
audio codec is configured, only used for A2DP SINK

`ESP_A2D_MEDIA_CTRL_ACK_EVT`
acknowledge event in response to media control commands

`ESP_A2D_PROF_STATE_EVT`
indicate a2dp deinit complete

BT AVRCP APIs

Overview

Bluetooth AVRCP reference APIs.

Instructions

Application Example

Instructions

API Reference

Header File

- bt/bluedroid/api/include/api/esp_avrc_api.h

Functions

esp_err_t **esp_avrc_ct_register_callback**(*esp_avrc_ct_cb_t callback*)
Register application callbacks to AVRCP module; for now only AVRCP Controller role is supported. This function should be called after esp_bluedroid_enable() completes successfully.

Return

- ESP_OK: success
- ESP_INVALID_STATE: if bluetooth stack is not yet enabled
- ESP_FAIL: others

Parameters

- `callback`: AVRCP controller callback function

esp_err_t **esp_avrc_ct_init**(void)

Initialize the bluetooth AVRCP controller module, This function should be called after esp_bluedroid_enable() completes successfully.

Return

- ESP_OK: success
- ESP_INVALID_STATE: if bluetooth stack is not yet enabled
- ESP_FAIL: others

esp_err_t **esp_avrc_ct_deinit**(void)

De-initialize AVRCP controller module. This function should be called after after esp_bluedroid_enable() completes successfully.

Return

- ESP_OK: success
- ESP_INVALID_STATE: if bluetooth stack is not yet enabled
- ESP_FAIL: others

esp_err_t **esp_avrc_ct_send_set_player_value_cmd**(uint8_t *tl*, uint8_t *attr_id*, uint8_t *value_id*)

Send player application settings command to AVRCP target. This function should be called after ESP_AVRC_CT_CONNECTION_STATE_EVT is received and AVRCP connection is established.

Return

- ESP_OK: success
- ESP_INVALID_STATE: if bluetooth stack is not yet enabled
- ESP_FAIL: others

Parameters

- `tl`: : transaction label, 0 to 15, consecutive commands should use different values.
- `attr_id`: : player application setting attribute IDs from one of esp_avrc_ps_attr_ids_t

- `value_id`: : attribute value defined for the specific player application setting attribute

esp_err_t **esp_avrc_ct_send_register_notification_cmd**(uint8_t *tl*, uint8_t *event_id*, uint32_t *event_parameter*)

Send register notification command to AVRCP target, This function should be called after ESP_AVRC_CT_CONNECTION_STATE_EVT is received and AVRCP connection is established.

Return

- ESP_OK: success
- ESP_INVALID_STATE: if bluetooth stack is not yet enabled
- ESP_FAIL: others

Parameters

- `tl`: : transaction label, 0 to 15, consecutive commands should use different values.
- `event_id`: : id of events, e.g. ESP_AVRC_RN_PLAY_STATUS_CHANGE, ESP_AVRC_RN_TRACK_CHANGE, etc.
- `event_parameter`: : special parameters, eg. playback interval for ESP_AVRC_RN_PLAY_POS_CHANGED

esp_err_t **esp_avrc_ct_send_metadata_cmd**(uint8_t *tl*, uint8_t *attr_mask*)

Send metadata command to AVRCP target, This function should be called after ESP_AVRC_CT_CONNECTION_STATE_EVT is received and AVRCP connection is established.

Return

- ESP_OK: success
- ESP_INVALID_STATE: if bluetooth stack is not yet enabled
- ESP_FAIL: others

Parameters

- `tl`: : transaction label, 0 to 15, consecutive commands should use different values.
- `attr_mask`: : mask of attributes, e.g. ESP_AVRC_MD_ATTR_ID_TITLE | ESP_AVRC_MD_ATTR_ID_ARTIST.

esp_err_t **esp_avrc_ct_send_passthrough_cmd**(uint8_t *tl*, uint8_t *key_code*, uint8_t *key_state*)

Send passthrough command to AVRCP target, This function should be called after ESP_AVRC_CT_CONNECTION_STATE_EVT is received and AVRCP connection is established.

Return

- ESP_OK: success

- ESP_INVALID_STATE: if bluetooth stack is not yet enabled
- ESP_FAIL: others

Parameters

- `tl`: : transaction label, 0 to 15, consecutive commands should use different values.
- `key_code`: : passthrough command code, e.g. ESP_AVRC_PT_CMD_PLAY, ESP_AVRC_PT_CMD_STOP, etc.
- `key_state`: : passthrough command key state, ESP_AVRC_PT_CMD_STATE_PRESSED or ESP_AVRC_PT_CMD_STATE_RELEASED

Unions

`union esp_avrc_ct_cb_param_t`

#include <esp_avrc_api.h> AVRC controller callback parameters.

Public Members

`struct` *esp_avrc_ct_cb_param_t*::*avrc_ct_conn_stat_param* `conn_stat`

AVRC connection status

`struct` *esp_avrc_ct_cb_param_t*::*avrc_ct_psth_rsp_param* `psth_rsp`

passthrough command response

`struct` *esp_avrc_ct_cb_param_t*::*avrc_ct_meta_rsp_param* `meta_rsp`

metadata attributes response

`struct` *esp_avrc_ct_cb_param_t*::*avrc_ct_change_notify_param* `change_ntf`

notifications

`struct` *esp_avrc_ct_cb_param_t*::*avrc_ct_rmt_feats_param* `rmt_feats`

AVRC features discovered from remote SDP server

`struct avrc_ct_change_notify_param`

#include <esp_avrc_api.h> ESP_AVRC_CT_CHANGE_NOTIFY_EVT.

Public Members

uint8_t `event_id`

id of AVRC event notification

uint32_t `event_parameter`

event notification parameter

struct avrc_ct_conn_stat_param

#include <esp_avrc_api.h> ESP_AVRC_CT_CONNECTION_STATE_EVT.

Public Members

bool **connected**

whether AVRC connection is set up

esp_bd_addr_t **remote_bda**

remote bluetooth device address

struct avrc_ct_meta_rsp_param

#include <esp_avrc_api.h> ESP_AVRC_CT_METADATA_RSP_EVT.

Public Members

uint8_t **attr_id**

id of metadata attribute

uint8_t ***attr_text**

attribute itself

int **attr_length**

attribute character length

struct avrc_ct_psth_rsp_param

#include <esp_avrc_api.h> ESP_AVRC_CT_PASSTHROUGH_RSP_EVT.

Public Members

uint8_t **tl**

transaction label, 0 to 15

uint8_t **key_code**

passthrough command code

uint8_t **key_state**

0 for PRESSED, 1 for RELEASED

struct avrc_ct_rmt_feats_param

#include <esp_avrc_api.h> ESP_AVRC_CT_REMOTE_FEATURES_EVT.

Public Members

uint32_t **feat_mask**

AVRC feature mask of remote device

esp_bd_addr_t **remote_bda**
remote bluetooth device address

Type Definitions

typedef void (***esp_avrc_ct_cb_t**)(*esp_avrc_ct_cb_event_t* event, *esp_avrc_ct_cb_param_t* *param)
AVRCP controller callback function type.

Parameters

- `event`: : Event type
- `param`: : Pointer to callback parameter union

Enumerations

enum esp_avrc_features_t
AVRC feature bit mask.

Values:

ESP_AVRC_FEAT_RCTG = 0x0001
remote control target

ESP_AVRC_FEAT_RCCT = 0x0002
remote control controller

ESP_AVRC_FEAT_VENDOR = 0x0008
remote control vendor dependent commands

ESP_AVRC_FEAT_BROWSE = 0x0010
use browsing channel

ESP_AVRC_FEAT_META_DATA = 0x0040
remote control metadata transfer command/response

ESP_AVRC_FEAT_ADV_CTRL = 0x0200
remote control advanced control commmand/response

enum esp_avrc_pt_cmd_t
AVRC passthrough command code.

Values:

ESP_AVRC_PT_CMD_PLAY = 0x44
play

ESP_AVRC_PT_CMD_STOP = 0x45
stop

ESP_AVRC_PT_CMD_PAUSE = 0x46
pause

ESP_AVRC_PT_CMD_FORWARD = 0x4B
forward

ESP_AVRC_PT_CMD_BACKWARD = 0x4C
backward

ESP_AVRC_PT_CMD_REWIND = 0x48
rewind

ESP_AVRC_PT_CMD_FAST_FORWARD = 0x49
fast forward

enum esp_avrc_pt_cmd_state_t
AVRC passthrough command state.

Values:

ESP_AVRC_PT_CMD_STATE_PRESSED = 0
key pressed

ESP_AVRC_PT_CMD_STATE_RELEASED = 1
key released

enum esp_avrc_ct_cb_event_t
AVRC Controller callback events.

Values:

ESP_AVRC_CT_CONNECTION_STATE_EVT = 0
connection state changed event

ESP_AVRC_CT_PASSTHROUGH_RSP_EVT = 1
passthrough response event

ESP_AVRC_CT_METADATA_RSP_EVT = 2
metadata response event

ESP_AVRC_CT_PLAY_STATUS_RSP_EVT = 3
play status response event

ESP_AVRC_CT_CHANGE_NOTIFY_EVT = 4
notification event

ESP_AVRC_CT_REMOTE_FEATURES_EVT = 5
feature of remote device indication event

enum esp_avrc_md_attr_mask_t
AVRC metadata attribute mask.

Values:

ESP_AVRC_MD_ATTR_TITLE = 0x1
title of the playing track

ESP_AVRC_MD_ATTR_ARTIST = 0x2
track artist

ESP_AVRC_MD_ATTR_ALBUM = 0x4
album name

ESP_AVRC_MD_ATTR_TRACK_NUM = 0x8
track position on the album

ESP_AVRC_MD_ATTR_NUM_TRACKS = 0x10
number of tracks on the album

ESP_AVRC_MD_ATTR_GENRE = 0x20
track genre

ESP_AVRC_MD_ATTR_PLAYING_TIME = 0x40
total album playing time in miliseconds

enum esp_avrc_rn_event_ids_t
AVRC event notification ids.

Values:

ESP_AVRC_RN_PLAY_STATUS_CHANGE = 0x01
track status change, eg. from playing to paused

ESP_AVRC_RN_TRACK_CHANGE = 0x02
new track is loaded

ESP_AVRC_RN_TRACK_REACHED_END = 0x03
current track reached end

ESP_AVRC_RN_TRACK_REACHED_START = 0x04
current track reached start position

ESP_AVRC_RN_PLAY_POS_CHANGED = 0x05
track playing position changed

ESP_AVRC_RN_BATTERY_STATUS_CHANGE = 0x06
battery status changed

ESP_AVRC_RN_SYSTEM_STATUS_CHANGE = 0x07
system status changed

ESP_AVRC_RN_APP_SETTING_CHANGE = 0x08
application settings changed

ESP_AVRC_RN_MAX_EVT

enum esp_avrc_ps_attr_ids_t

AVRC player setting ids.

Values:

ESP_AVRC_PS_EQUALIZER = 0x01

equalizer, on or off

ESP_AVRC_PS_REPEAT_MODE = 0x02

repeat mode

ESP_AVRC_PS_SHUFFLE_MODE = 0x03

shuffle mode

ESP_AVRC_PS_SCAN_MODE = 0x04

scan mode on or off

ESP_AVRC_PS_MAX_ATTR

enum esp_avrc_ps_eq_value_ids_t

AVRC equalizer modes.

Values:

ESP_AVRC_PS_EQUALIZER_OFF = 0x1

equalizer OFF

ESP_AVRC_PS_EQUALIZER_ON = 0x2

equalizer ON

enum esp_avrc_ps_rpt_value_ids_t

AVRC repeat modes.

Values:

ESP_AVRC_PS_REPEAT_OFF = 0x1

repeat mode off

ESP_AVRC_PS_REPEAT_SINGLE = 0x2

single track repeat

ESP_AVRC_PS_REPEAT_GROUP = 0x3

group repeat

enum esp_avrc_ps_shf_value_ids_t

AVRC shuffle modes.

Values:

ESP_AVRC_PS_SHUFFLE_OFF = 0x1

ESP_AVRC_PS_SHUFFLE_ALL = 0x2

ESP_AVRC_PS_SHUFFLE_GROUP = 0x3

enum esp_avrc_ps_scn_value_ids_t

AVRC scan modes.

Values:

ESP_AVRC_PS_SCAN_OFF = 0x1

scan off

ESP_AVRC_PS_SCAN_ALL = 0x2

all tracks scan

ESP_AVRC_PS_SCAN_GROUP = 0x3

group scan

SPP API

Overview

Instructions

Application Example

Check bluetooth folder in ESP-IDF examples, which contains the following application:

- This is a SPP demo. This demo can discover the service, connect, send and recive SPP data bluetooth/bt_spp_acceptor, bluetooth/bt_spp_initiator

API Reference

Header File

- bt/bluedroid/api/include/api/esp_spp_api.h

Functions

esp_err_t **esp_spp_register_callback**(esp_spp_cb_t *callback*)

This function is called to init callbacks with SPP module.

Return

- ESP_OK: success
- other: failed

Parameters

- `callback`: pointer to the init callback function.

esp_err_t **esp_spp_init**(*esp_spp_mode_t mode*)

This function is called to init SPP.

Return

- ESP_OK: success
- other: failed

Parameters

- `mode`: Choose the mode of SPP, ESP_SPP_MODE_CB or ESP_SPP_MODE_VFS.

esp_err_t **esp_spp_deinit**()

This function is called to uninit SPP.

Return

- ESP_OK: success
- other: failed

esp_err_t **esp_spp_start_discovery**(*esp_bd_addr_t bd_addr*)

This function is called to performs service discovery for the services provided by the given peer device. When the operation is complete the callback function will be called with a ESP_SPP_DISCOVERY_COMP_EVT.

Return

- ESP_OK: success
- other: failed

Parameters

- `bd_addr`: Remote device bluetooth device address.

esp_err_t **esp_spp_connect**(*esp_spp_sec_t sec_mask*, *esp_spp_role_t role*, uint8_t *remote_scn*, *esp_bd_addr_t peer_bd_addr*)

This function makes an SPP connection to a remote BD Address. When the connection is initiated or failed to initiate, the callback is called with ESP_SPP_CL_INIT_EVT. When the connection is established or failed, the callback is called with ESP_SPP_OPEN_EVT.

Return

- ESP_OK: success
- other: failed

Parameters

- `sec_mask`: Security Setting Mask. Suggest to use ESP_SPP_SEC_NONE, ESP_SPP_SEC_AUTHORIZE or ESP_SPP_SEC_AUTHENTICATE only.
- `role`: Master or slave.
- `remote_scn`: Remote device bluetooth device SCN.
- `peer_bd_addr`: Remote device bluetooth device address.

esp_err_t **esp_spp_disconnect**(uint32_t *handle*)

This function closes an SPP connection.

Return

- ESP_OK: success
- other: failed

Parameters

- `handle`: The connection handle.

esp_err_t **esp_spp_start_srv**(*esp_spp_sec_t sec_mask*, *esp_spp_role_t role*, uint8_t *local_scn*, **const** char ***name*)

This function create a SPP server and starts listening for an SPP connection request from a remote Bluetooth device. When the server is started successfully, the callback is called with ESP_SPP_START_EVT. When the connection is established, the callback is called with ESP_SPP_SRV_OPEN_EVT.

Return

- ESP_OK: success
- other: failed

Parameters

- `sec_mask`: Security Setting Mask. Security Setting Mask. Suggest to use ESP_SPP_SEC_NONE, ESP_SPP_SEC_AUTHORIZE or ESP_SPP_SEC_AUTHENTICATE only.
- `role`: Master or slave.
- `local_scn`: The specific channel you want to get. If channel is 0, means get any channel.
- `name`: Server' s name.

esp_err_t **esp_spp_stop_srv**(void)

This function stops all SPP servers. The operation will close all active SPP connection first, then the callback function will be called with ESP_SPP_CLOSE_EVT, and the number of

ESP_SPP_CLOSE_EVT is equal to the number of connection. When the operation is completed, the callback is called with ESP_SPP_SRV_STOP_EVT. This funciton must be called after esp_spp_init() successful and before esp_spp_deinit().

Return

- ESP_OK: success
- other: failed

esp_err_t **esp_spp_stop_srv_scn**(uint8_t *scn*)

This function stops a specific SPP server. The operation will close all active SPP connection first on the specific SPP server, then the callback function will be called with ESP_SPP_CLOSE_EVT, and the number of ESP_SPP_CLOSE_EVT is equal to the number of connection. When the operation is completed, the callback is called with ESP_SPP_SRV_STOP_EVT. This funciton must be called after esp_spp_init() successful and before esp_spp_deinit().

Return

- ESP_OK: success
- other: failed

Parameters

- `scn`: Server channel number.

esp_err_t **esp_spp_write**(uint32_t *handle*, int *len*, uint8_t **p_data*)

This function is used to write data, only for ESP_SPP_MODE_CB.

Return

- ESP_OK: success
- other: failed

Parameters

- `handle`: The connection handle.
- `len`: The length of the data written.
- `p_data`: The data written.

esp_err_t **esp_spp_vfs_register**(void)

This function is used to register VFS.

Return

- ESP_OK: success
- other: failed

Unions

union esp_spp_cb_param_t

#include <esp_spp_api.h> SPP callback parameters union.

Public Members

struct *esp_spp_cb_param_t*::*spp_init_evt_param* **init**

SPP callback param of SPP_INIT_EVT

struct *esp_spp_cb_param_t*::*spp_uninit_evt_param* **uninit**

SPP callback param of SPP_UNINIT_EVT

struct *esp_spp_cb_param_t*::*spp_discovery_comp_evt_param* **disc_comp**

SPP callback param of SPP_DISCOVERY_COMP_EVT

struct *esp_spp_cb_param_t*::*spp_open_evt_param* **open**

SPP callback param of ESP_SPP_OPEN_EVT

struct *esp_spp_cb_param_t*::*spp_srv_open_evt_param* **srv_open**

SPP callback param of ESP_SPP_SRV_OPEN_EVT

struct *esp_spp_cb_param_t*::*spp_close_evt_param* **close**

SPP callback param of ESP_SPP_CLOSE_EVT

struct *esp_spp_cb_param_t*::*spp_start_evt_param* **start**

SPP callback param of ESP_SPP_START_EVT

struct *esp_spp_cb_param_t*::*spp_srv_stop_evt_param* **srv_stop**

SPP callback param of ESP_SPP_SRV_STOP_EVT

struct *esp_spp_cb_param_t*::*spp_cl_init_evt_param* **cl_init**

SPP callback param of ESP_SPP_CL_INIT_EVT

struct *esp_spp_cb_param_t*::*spp_write_evt_param* **write**

SPP callback param of ESP_SPP_WRITE_EVT

struct *esp_spp_cb_param_t*::*spp_data_ind_evt_param* **data_ind**

SPP callback param of ESP_SPP_DATA_IND_EVT

struct *esp_spp_cb_param_t*::*spp_cong_evt_param* **cong**

SPP callback param of ESP_SPP_CONG_EVT

struct spp_cl_init_evt_param

#include <esp_spp_api.h> ESP_SPP_CL_INIT_EVT.

Public Members

esp_spp_status_t **status**
status

uint32_t **handle**
The connection handle

uint8_t **sec_id**
security ID used by this server

bool **use_co**
TRUE to use co_rfc_data

struct spp_close_evt_param
#include <esp_spp_api.h> ESP_SPP_CLOSE_EVT.

Public Members

esp_spp_status_t **status**
status

uint32_t **port_status**
PORT status

uint32_t **handle**
The connection handle

bool **async**
FALSE, if local initiates disconnect

struct spp_cong_evt_param
#include <esp_spp_api.h> ESP_SPP_CONG_EVT.

Public Members

esp_spp_status_t **status**
status

uint32_t **handle**
The connection handle

bool **cong**
TRUE, congested. FALSE, uncongested

struct spp_data_ind_evt_param
#include <esp_spp_api.h> ESP_SPP_DATA_IND_EVT.

Public Members

esp_spp_status_t **status**
status

uint32_t **handle**
The connection handle

uint16_t **len**
The length of data

uint8_t ***data**
The data received

struct spp_discovery_comp_evt_param
#include <esp_spp_api.h> SPP_DISCOVERY_COMP_EVT.

Public Members

esp_spp_status_t **status**
status

uint8_t **scn_num**
The num of scn_num

uint8_t **scn**[**ESP_SPP_MAX_SCN**]
channel #

const char ***service_name**[**ESP_SPP_MAX_SCN**]
service_name

struct spp_init_evt_param
#include <esp_spp_api.h> SPP_INIT_EVT.

Public Members

esp_spp_status_t **status**
status

struct spp_open_evt_param
#include <esp_spp_api.h> ESP_SPP_OPEN_EVT.

Public Members

esp_spp_status_t **status**
status

uint32_t **handle**

The connection handle

int **fd**

The file descriptor only for ESP_SPP_MODE_VFS

esp_bd_addr_t **rem_bda**

The peer address

struct spp_srv_open_evt_param

#include <esp_spp_api.h> ESP_SPP_SRV_OPEN_EVT.

Public Members

esp_spp_status_t **status**

status

uint32_t **handle**

The connection handle

uint32_t **new_listen_handle**

The new listen handle

int **fd**

The file descriptor only for ESP_SPP_MODE_VFS

esp_bd_addr_t **rem_bda**

The peer address

struct spp_srv_stop_evt_param

#include <esp_spp_api.h> ESP_SPP_SRV_STOP_EVT.

Public Members

esp_spp_status_t **status**

status

uint8_t **scn**

Server channel number

struct spp_start_evt_param

#include <esp_spp_api.h> ESP_SPP_START_EVT.

Public Members

esp_spp_status_t **status**

status

uint32_t **handle**
The connection handle

uint8_t **sec_id**
security ID used by this server

uint8_t **scn**
Server channel number

bool **use_co**
TRUE to use co_rfc_data

struct spp_uninit_evt_param
#include <esp_spp_api.h> SPP_UNINIT_EVT.

Public Members

esp_spp_status_t **status**
status

struct spp_write_evt_param
#include <esp_spp_api.h> ESP_SPP_WRITE_EVT.

Public Members

esp_spp_status_t **status**
status

uint32_t **handle**
The connection handle

int **len**
The length of the data written.

bool **cong**
congestion status

Macros

ESP_SPP_SEC_NONE
No security. relate to BTA_SEC_NONE in bta/bta_api.h

ESP_SPP_SEC_AUTHORIZE
Authorization required (only needed for out going connection) relate to BTA_SEC_AUTHORIZE in bta/bta_api.h

`ESP_SPP_SEC_AUTHENTICATE`
Authentication required. relate to BTA_SEC_AUTHENTICATE in bta/bta_api.h

`ESP_SPP_SEC_ENCRYPT`
Encryption required. relate to BTA_SEC_ENCRYPT in bta/bta_api.h

`ESP_SPP_SEC_MODE4_LEVEL4`
Mode 4 level 4 service, i.e. incoming/outgoing MITM and P-256 encryption relate to BTA_SEC_MODE4_LEVEL4 in bta/bta_api.h

`ESP_SPP_SEC_MITM`
Man-In-The_Middle protection relate to BTA_SEC_MITM in bta/bta_api.h

`ESP_SPP_SEC_IN_16_DIGITS`
Min 16 digit for pin code relate to BTA_SEC_IN_16_DIGITS in bta/bta_api.h

`ESP_SPP_MAX_MTU`
SPP max MTU

`ESP_SPP_MAX_SCN`
SPP max SCN

Type Definitions

`typedef` uint16_t `esp_spp_sec_t`

`typedef void() esp_spp_cb_t(esp_spp_cb_event_t event, esp_spp_cb_param_t *param)`
SPP callback function type.

Parameters

- `event`: Event type
- `param`: Point to callback parameter, currently is union type

Enumerations

`enum esp_spp_status_t`
Values:

`ESP_SPP_SUCCESS` = 0
Successful operation.

`ESP_SPP_FAILURE`
Generic failure.

`ESP_SPP_BUSY`
Temporarily can not handle this request.

ESP_SPP_NO_DATA
No data.

ESP_SPP_NO_RESOURCE
No more resource

ESP_SPP_NEED_INIT
SPP module shall init first

ESP_SPP_NEED_DEINIT
SPP module shall deinit first

ESP_SPP_NO_CONNECTION
Connection may have been closed

ESP_SPP_NO_SERVER
No SPP server

enum esp_spp_role_t
Values:

ESP_SPP_ROLE_MASTER = 0
Role: master

ESP_SPP_ROLE_SLAVE = 1
Role: slave

enum esp_spp_mode_t
Values:

ESP_SPP_MODE_CB = 0
When data is coming, a callback will come with data

ESP_SPP_MODE_VFS = 1
Use VFS to write/read data

enum esp_spp_cb_event_t
SPP callback function events.

Values:

ESP_SPP_INIT_EVT = 0
When SPP is inited, the event comes

ESP_SPP_UNINIT_EVT = 1
When SPP is uninited, the event comes

ESP_SPP_DISCOVERY_COMP_EVT = 8
When SDP discovery complete, the event comes

ESP_SPP_OPEN_EVT = 26
When SPP Client connection open, the event comes

`ESP_SPP_CLOSE_EVT` = 27

When SPP connection closed, the event comes

`ESP_SPP_START_EVT` = 28

When SPP server started, the event comes

`ESP_SPP_CL_INIT_EVT` = 29

When SPP client initiated a connection, the event comes

`ESP_SPP_DATA_IND_EVT` = 30

When SPP connection received data, the event comes, only for ESP_SPP_MODE_CB

`ESP_SPP_CONG_EVT` = 31

When SPP connection congestion status changed, the event comes, only for ESP_SPP_MODE_CB

`ESP_SPP_WRITE_EVT` = 33

When SPP write operation completes, the event comes, only for ESP_SPP_MODE_CB

`ESP_SPP_SRV_OPEN_EVT` = 34

When SPP Server connection open, the event comes

`ESP_SPP_SRV_STOP_EVT` = 35

When SPP server stopped, the event comes

HFP DEFINES

Overview

Instructions

API Reference

Header File

- bt/bluedroid/api/include/api/esp_hf_defs.h

Enumerations

`enum esp_hf_volume_control_target_t`

Bluetooth HFP audio volume control target.

Values:

`ESP_HF_VOLUME_CONTROL_TARGET_SPK` = 0

speaker

ESP_HF_VOLUME_CONTROL_TARGET_MIC
microphone

enum esp_hf_roaming_status_t
+CIND roaming status indicator values

Values:

ESP_HF_ROAMING_STATUS_INACTIVE = 0
roaming is not active

ESP_HF_ROAMING_STATUS_ACTIVE
a roaming is active

enum esp_hf_call_status_t
+CIND call status indicator values

Values:

ESP_HF_CALL_STATUS_NO_CALLS = 0
no call in progress

ESP_HF_CALL_STATUS_CALL_IN_PROGRESS = 1
call is present(active or held)

enum esp_hf_call_setup_status_t
+CIND call setup status indicator values

Values:

ESP_HF_CALL_SETUP_STATUS_NONE = 0
no call setup in progress

ESP_HF_CALL_SETUP_STATUS_INCOMING = 1
incoming call setup in progress

ESP_HF_CALL_SETUP_STATUS_OUTGOING_DIALING = 2
outgoing call setup in dialing state

ESP_HF_CALL_SETUP_STATUS_OUTGOING_ALERTING = 3
outgoing call setup in alerting state

enum esp_hf_call_held_status_t
+CIND call held indicator values

Values:

ESP_HF_CALL_HELD_STATUS_NONE = 0
no calls held

ESP_HF_CALL_HELD_STATUS_HELD_AND_ACTIVE = 1
both active and held call

ESP_HF_CALL_HELD_STATUS_HELD = 2
call on hold, no active call

enum esp_hf_service_availability_status_t
+CIND network service availability status

Values:

ESP_HF_SERVICE_AVAILABILITY_STATUS_UNAVAILABLE = 0
service not available

ESP_HF_SERVICE_AVAILABILITY_STATUS_AVAILABLE
service available

enum esp_hf_current_call_status_t
+CLCC status of the call

Values:

ESP_HF_CURRENT_CALL_STATUS_ACTIVE = 0
active

ESP_HF_CURRENT_CALL_STATUS_HELD = 1
held

ESP_HF_CURRENT_CALL_STATUS_DIALING = 2
dialing (outgoing calls only)

ESP_HF_CURRENT_CALL_STATUS_ALERTING = 3
alerting (outgoing calls only)

ESP_HF_CURRENT_CALL_STATUS_INCOMING = 4
incoming (incoming calls only)

ESP_HF_CURRENT_CALL_STATUS_WAITING = 5
waiting (incoming calls only)

ESP_HF_CURRENT_CALL_STATUS_HELD_BY_RESP_HOLD = 6
call held by response and hold

enum esp_hf_current_call_direction_t
+CLCC direction of the call

Values:

ESP_HF_CURRENT_CALL_DIRECTION_OUTGOING = 0
outgoing

ESP_HF_CURRENT_CALL_DIRECTION_INCOMING = 1
incoming

enum esp_hf_current_call_mpty_type_t
+CLCC multi-party call flag

Values:

ESP_HF_CURRENT_CALL_MPTY_TYPE_SINGLE = 0
not a member of a multi-party call

ESP_HF_CURRENT_CALL_MPTY_TYPE_MULTI = 1
member of a multi-party call

enum esp_hf_current_call_mode_t
+CLCC call mode

Values:

ESP_HF_CURRENT_CALL_MODE_VOICE = 0

ESP_HF_CURRENT_CALL_MODE_DATA = 1

ESP_HF_CURRENT_CALL_MODE_FAX = 2

enum esp_hf_call_addr_type_t
+CLCC address type

Values:

ESP_HF_CALL_ADDR_TYPE_UNKNOWN = 0x81
unkown address type

ESP_HF_CALL_ADDR_TYPE_INTERNATIONAL = 0x91
international address

enum esp_hf_subscriber_service_type_t
+CNUM service type of the phone number

Values:

ESP_HF_SUBSCRIBER_SERVICE_TYPE_UNKNOWN = 0
unknown

ESP_HF_SUBSCRIBER_SERVICE_TYPE_VOICE
voice service

ESP_HF_SUBSCRIBER_SERVICE_TYPE_FAX
fax service

enum esp_hf_btrh_status_t
+BTRH response and hold result code

Values:

ESP_HF_BTRH_STATUS_HELD = 0
incoming call is put on held in AG

ESP_HF_BTRH_STATUS_ACCEPTED
held incoming call is accepted in AG

ESP_HF_BTRH_STATUS_REJECTED
held incoming call is rejected in AG

enum esp_hf_btrh_cmd_t
AT+BTRH response and hold action code.

Values:

ESP_HF_BTRH_CMD_HOLD = 0
put the incoming call on hold

ESP_HF_BTRH_CMD_ACCEPT = 1
accept a held incoming call

ESP_HF_BTRH_CMD_REJECT = 2
reject a held incoming call

enum esp_hf_at_response_code_t
response indication codes for AT commands

Values:

ESP_HF_AT_RESPONSE_CODE_OK = 0
acknowledges execution of a command line

ESP_HF_AT_RESPONSE_CODE_ERR
command not accepted

ESP_HF_AT_RESPONSE_CODE_NO_CARRIER
connection terminated

ESP_HF_AT_RESPONSE_CODE_BUSY
busy signal detected

ESP_HF_AT_RESPONSE_CODE_NO_ANSWER
connection completion timeout

ESP_HF_AT_RESPONSE_CODE_DELAYED
delayed

ESP_HF_AT_RESPONSE_CODE_BLACKLISTED
blacklisted

ESP_HF_AT_RESPONSE_CODE_CME
CME error

enum esp_hf_vr_state_t
voice recognition state

Values:

ESP_HF_VR_STATE_DISABLED = 0
voice recognition disabled

ESP_HF_VR_STATE_ENABLED
voice recognition enabled

enum esp_hf_chld_type_t
AT+CHLD command values.

Values:

ESP_HF_CHLD_TYPE_REL = 0
<0>, Terminate all held or set UDUB("busy") to a waiting call

ESP_HF_CHLD_TYPE_REL_ACC
<1>, Terminate all active calls and accepts a waiting/held call

ESP_HF_CHLD_TYPE_HOLD_ACC
<2>, Hold all active calls and accepts a waiting/held call

ESP_HF_CHLD_TYPE_MERGE
<3>, Add all held calls to a conference

ESP_HF_CHLD_TYPE_MERGE_DETACH
<4>, connect the two calls and disconnects the subscriber from both calls

ESP_HF_CHLD_TYPE_REL_X
<1x>, releases specified calls only

ESP_HF_CHLD_TYPE_PRIV_X
<2x>, request private consultation mode with specified call

enum esp_hf_cme_err_t
Extended Audio Gateway Error Result Code Response.

Values:

ESP_HF_CME_AG_FAILURE = 0
ag failure

ESP_HF_CME_NO_CONNECTION_TO_PHONE = 1
no connection to phone

ESP_HF_CME_OPERATION_NOT_ALLOWED = 3
operation not allowed

ESP_HF_CME_OPERATION_NOT_SUPPORTED = 4
operation not supported

ESP_HF_CME_PH_SIM_PIN_REQUIRED = 5
PH-SIM PIN Required

ESP_HF_CME_SIM_NOT_INSERTED = 10
SIM not inserted

ESP_HF_CME_SIM_PIN_REQUIRED = 11
SIM PIN required

ESP_HF_CME_SIM_PUK_REQUIRED = 12
SIM PUK required

ESP_HF_CME_SIM_FAILURE = 13
SIM failure

ESP_HF_CME_SIM_BUSY = 14
SIM busy

ESP_HF_CME_INCORRECT_PASSWORD = 16
incorrect password

ESP_HF_CME_SIM_PIN2_REQUIRED = 17
SIM PIN2 required

ESP_HF_CME_SIM_PUK2_REQUIRED = 18
SIM PUK2 required

ESP_HF_CME_MEMEORY_FULL = 20
memory full

ESP_HF_CME_INVALID_INDEX = 21
invalid index

ESP_HF_CME_MEMEORY_FAILURE = 23
memory failure

ESP_HF_CME_TEXT_STRING_TOO_LONG = 24
test string too long

ESP_HF_CME_INVALID_CHARACTERS_IN_TEXT_STRING = 25
invalid characters in text string

ESP_HF_CME_DIAL_STRING_TOO_LONG = 26
dial string too long

ESP_HF_CME_INVALID_CHARACTERS_IN_DIAL_STRING = 27
invalid characters in dial string

ESP_HF_CME_NO_NETWORK_SERVICE = 30
no network service

ESP_HF_CME_NETWORK_TIMEOUT = 31
network timeout

ESP_HF_CME_NETWORK_NOT_ALLOWED = 32
network not allowed emergency calls only

HFP CLIENT API

Overview

Instructions

API Reference

Header File

- bt/bluedroid/api/include/api/esp_hf_client_api.h

Functions

esp_err_t **esp_hf_client_register_callback**(*esp_hf_client_cb_t callback*)

Register application callback function to HFP client module. This function should be called only after esp_bluedroid_enable() completes successfully, used by HFP client.

Return

- ESP_OK: success
- ESP_INVALID_STATE: if bluetooth stack is not yet enabled
- ESP_FAIL: if callback is a NULL function pointer

Parameters

- `callback`: HFP client event callback function

esp_err_t **esp_hf_client_init**(void)

Initialize the bluetooth HFP client module. This function should be called after esp_bluedroid_enable() completes successfully.

Return

- ESP_OK: if the initialization request is sent successfully
- ESP_INVALID_STATE: if bluetooth stack is not yet enabled
- ESP_FAIL: others

esp_err_t **esp_hf_client_deinit**(void)

De-initialize for HFP client module. This function should be called only after esp_bluedroid_enable() completes successfully.

Return

- ESP_OK: success
- ESP_INVALID_STATE: if bluetooth stack is not yet enabled
- ESP_FAIL: others

esp_err_t **esp_hf_client_connect**(*esp_bd_addr_t remote_bda*)

Connect to remote bluetooth HFP audio gateway(AG) device, must after esp_hf_client_init()

Return

- ESP_OK: connect request is sent to lower layer
- ESP_INVALID_STATE: if bluetooth stack is not yet enabled
- ESP_FAIL: others

Parameters

- `remote_bda`: remote bluetooth device address

esp_err_t **esp_hf_client_disconnect**(*esp_bd_addr_t remote_bda*)

Disconnect from the remote HFP audio gateway.

Return

- ESP_OK: disconnect request is sent to lower layer
- ESP_INVALID_STATE: if bluetooth stack is not yet enabled
- ESP_FAIL: others

Parameters

- `remote_bda`: remote bluetooth device address

esp_err_t **esp_hf_client_connect_audio**(*esp_bd_addr_t remote_bda*)

Create audio connection with remote HFP AG. As a precondition to use this API, Service Level Connection shall exist with AG.

Return

- ESP_OK: disconnect request is sent to lower layer
- ESP_INVALID_STATE: if bluetooth stack is not yet enabled
- ESP_FAIL: others

Parameters

- `remote_bda`: remote bluetooth device address

esp_err_t **esp_hf_client_disconnect_audio**(*esp_bd_addr_t remote_bda*)

Release the established audio connection with remote HFP AG.

Return

- ESP_OK: disconnect request is sent to lower layer
- ESP_INVALID_STATE: if bluetooth stack is not yet enabled
- ESP_FAIL: others

Parameters

- `remote_bda`: remote bluetooth device address

esp_err_t **esp_hf_client_start_voice_recognition**(void)

Enable voice recognition in the AG. As a precondition to use this API, Service Level Connection shall exist with AG.

Return

- ESP_OK: disconnect request is sent to lower layer
- ESP_INVALID_STATE: if bluetooth stack is not yet enabled
- ESP_FAIL: others

esp_err_t **esp_hf_client_stop_voice_recognition**(void)

Disable voice recognition in the AG. As a precondition to use this API, Service Level Connection shall exist with AG.

Return

- ESP_OK: disconnect request is sent to lower layer
- ESP_INVALID_STATE: if bluetooth stack is not yet enabled
- ESP_FAIL: others

esp_err_t **esp_hf_client_volume_update**(*esp_hf_volume_control_target_t* *type*, int *volume*)

Volume synchronization with AG. As a precondition to use this API, Service Level Connection shall exist with AG.

Return

- ESP_OK: disconnect request is sent to lower layer
- ESP_INVALID_STATE: if bluetooth stack is not yet enabled
- ESP_FAIL: others

Parameters

- `type`: volume control target, speaker or microphone
- `volume`: gain of the speaker of microphone, ranges 0 to 15

esp_err_t **esp_hf_client_dial**(**const** char ***number*)

Place a call with a specified number, if number is NULL, last called number is called. As a precondition to use this API, Service Level Connection shall exist with AG.

Return

- ESP_OK: disconnect request is sent to lower layer
- ESP_INVALID_STATE: if bluetooth stack is not yet enabled
- ESP_FAIL: others

Parameters

- `number`: number string of the call. If NULL, the last number is called(aka re-dial)

esp_err_t **esp_hf_client_dial_memory**(int *location*)

Place a call with number specified by location(speed dial). As a precondition, to use this API, Service Level Connection shall exist with AG.

Return

- ESP_OK: disconnect request is sent to lower layer
- ESP_INVALID_STATE: if bluetooth stack is not yet enabled
- ESP_FAIL: others

Parameters

- `location`: location of the number in the memory

esp_err_t **esp_hf_client_send_chld_cmd**(*esp_hf_chld_type_t chld*, int *idx*)

Send call hold and multiparty commands, or enhanced call control commands(Use AT+CHLD). As a precondition to use this API, Service Level Connection shall exist with AG.

Return

- ESP_OK: disconnect request is sent to lower layer
- ESP_INVALID_STATE: if bluetooth stack is not yet enabled
- ESP_FAIL: others

Parameters

- `chld`: AT+CHLD call hold and multiparty handling AT command.
- `idx`: used in Enhanced Call Control Mechanisms, used if chld is ESP_HF_CHLD_TYPE_REL_X or ESP_HF_CHLD_TYPE_PRIV_X

esp_err_t **esp_hf_client_send_btrh_cmd**(*esp_hf_btrh_cmd_t btrh*)

Send response and hold action command(Send AT+BTRH command) As a precondition to use this API, Service Level Connection shall exist with AG.

Return

- ESP_OK: disconnect request is sent to lower layer
- ESP_INVALID_STATE: if bluetooth stack is not yet enabled
- ESP_FAIL: others

Parameters

- `btrh`: response and hold action to send

esp_err_t **esp_hf_client_answer_call**(void)

Answer an incoming call(send ATA command). As a precondition to use this API, Service Level Connection shall exist with AG.

Return

- ESP_OK: disconnect request is sent to lower layer
- ESP_INVALID_STATE: if bluetooth stack is not yet enabled
- ESP_FAIL: others

esp_err_t **esp_hf_client_reject_call**(void)

Reject an incoming call(send AT+CHUP command), As a precondition to use this API, Service Level Connection shall exist with AG.

Return

- ESP_OK: disconnect request is sent to lower layer
- ESP_INVALID_STATE: if bluetooth stack is not yet enabled
- ESP_FAIL: others

esp_err_t **esp_hf_client_query_current_calls**(void)

Query list of current calls in AG(send AT+CLCC command), As a precondition to use this API, Service Level Connection shall exist with AG.

Return

- ESP_OK: disconnect request is sent to lower layer
- ESP_INVALID_STATE: if bluetooth stack is not yet enabled
- ESP_FAIL: others

esp_err_t **esp_hf_client_query_current_operator_name**(void)

Query the name of currently selected network operator in AG(use AT+COPS commands) As a precondition to use this API, Service Level Connection shall exist with AG.

Return

- ESP_OK: disconnect request is sent to lower layer
- ESP_INVALID_STATE: if bluetooth stack is not yet enabled
- ESP_FAIL: others

esp_err_t **esp_hf_client_retrieve_subscriber_info**(void)

Get subscriber information number from AG(send AT+CNUM command) As a precondition to use this API, Service Level Connection shall exist with AG.

Return

- ESP_OK: disconnect request is sent to lower layer
- ESP_INVALID_STATE: if bluetooth stack is not yet enabled
- ESP_FAIL: others

esp_err_t **esp_hf_client_send_dtmf**(char *code*)

Transmit DTMF codes during an ongoing call(use AT+VTS commands) As a precondition to use this API, Service Level Connection shall exist with AG.

Return

- ESP_OK: disconnect request is sent to lower layer
- ESP_INVALID_STATE: if bluetooth stack is not yet enabled
- ESP_FAIL: others

Parameters

- `code`: dtmf code, single ascii character in the set 0-9, #, *, A-D

esp_err_t **esp_hf_client_request_last_voice_tag_number**(void)

Request a phone number from AG corresponding to last voice tag recorded (send AT+BINP command). As a precondition to use this API, Service Level Connection shall exist with AG.

Return

- ESP_OK: disconnect request is sent to lower layer
- ESP_INVALID_STATE: if bluetooth stack is not yet enabled
- ESP_FAIL: others

esp_err_t **esp_hf_client_register_data_callback**(*esp_hf_client_incoming_data_cb_t recv*, *esp_hf_client_outgoing_data_cb_t send*)

Register HFP client data output function; the callback is only used in the case that Voice Over HCI is enabled.

Return

- ESP_OK: success
- ESP_INVALID_STATE: if bluetooth stack is not yet enabled
- ESP_FAIL: if callback is a NULL function pointer

Parameters

- `recv`: HFP client incoming data callback function
- `send`: HFP client outgoing data callback function

void **esp_hf_client_outgoing_data_ready**(void)

Trigger the lower-layer to fetch and send audio data. This function is only only used in the case that Voice Over HCI is enabled. Precondition is that the HFP audio connection is connected. After this function is called, lower layer will invoke esp_hf_client_outgoing_data_cb_t to fetch data.

void **esp_hf_client_pcm_resample_init**(uint32_t *src_sps*, uint32_t *bits*, uint32_t *channels*)

Initialize the down sampling converter. This is a utility function that can only be used in the case that Voice Over HCI is enabled.

Parameters

- `src_sps`: original samples per second(source audio data, i.e. 48000, 32000, 16000, 44100, 22050, 11025)
- `bits`: number of bits per pcm sample (16)
- `channels`: number of channels (i.e. mono(1), stereo(2)···)

int32_t **esp_hf_client_pcm_resample**(void **src*, uint32_t *in_bytes*, void **dst*)

Down sampling utility to convert high sampling rate into 8K/16bits 1-channel mode PCM samples. This can only be used in the case that Voice Over HCI is enabled.

Return number of samples converted

Parameters

- `src`: pointer to the buffer where the original sampling PCM are stored
- `in_bytes`: length of the input PCM sample buffer in byte
- `dst`: pointer to the buffer which is to be used to store the converted PCM samples

Unions

union esp_hf_client_cb_param_t

#include <esp_hf_client_api.h> HFP client callback parameters.

Public Members

struct *esp_hf_client_cb_param_t*::*hf_client_conn_stat_param* **conn_stat**

HF callback param of ESP_HF_CLIENT_CONNECTION_STATE_EVT

struct *esp_hf_client_cb_param_t*::*hf_client_audio_stat_param* **audio_stat**

HF callback param of ESP_HF_CLIENT_AUDIO_STATE_EVT

struct *esp_hf_client_cb_param_t*::*hf_client_bvra_param* **bvra**

HF callback param of ESP_HF_CLIENT_BVRA_EVT

struct *esp_hf_client_cb_param_t*::*hf_client_service_availability_param* **service_availability**

HF callback param of ESP_HF_CLIENT_CIND_SERVICE_AVAILABILITY_EVT

struct *esp_hf_client_cb_param_t*::*hf_client_network_roaming_param* **roaming**

HF callback param of ESP_HF_CLIENT_CIND_ROAMING_STATUS_EVT

struct *esp_hf_client_cb_param_t*::*hf_client_signal_strength_ind_param* **signal_strength**

HF callback param of ESP_HF_CLIENT_CIND_SIGNAL_STRENGTH_EVT

struct *esp_hf_client_cb_param_t*::*hf_client_battery_level_ind_param* **battery_level**

HF callback param of ESP_HF_CLIENT_CIND_BATTERY_LEVEL_EVT

struct *esp_hf_client_cb_param_t*::*hf_client_current_operator_param* **cops**

HF callback param of ESP_HF_CLIENT_COPS_CURRENT_OPERATOR_EVT

struct *esp_hf_client_cb_param_t*::*hf_client_call_ind_param* **call**

HF callback param of ESP_HF_CLIENT_CIND_CALL_EVT

struct *esp_hf_client_cb_param_t*::*hf_client_call_setup_ind_param* **call_setup**

HF callback param of ESP_HF_CLIENT_BVRA_EVT

struct *esp_hf_client_cb_param_t*::*hf_client_call_held_ind_param* **call_held**

HF callback param of ESP_HF_CLIENT_CIND_CALL_HELD_EVT

struct *esp_hf_client_cb_param_t*::*hf_client_btrh_param* **btrh**

HF callback param of ESP_HF_CLIENT_BRTH_EVT

struct *esp_hf_client_cb_param_t*::*hf_client_clip_param* **clip**

HF callback param of ESP_HF_CLIENT_CLIP_EVT

struct *esp_hf_client_cb_param_t*::*hf_client_ccwa_param* **ccwa**

HF callback param of ESP_HF_CLIENT_BVRA_EVT

struct *esp_hf_client_cb_param_t*::*hf_client_clcc_param* **clcc**

HF callback param of ESP_HF_CLIENT_CLCC_EVT

struct *esp_hf_client_cb_param_t*::*hf_client_volume_control_param* **volume_control**

HF callback param of ESP_HF_CLIENT_VOLUME_CONTROL_EVT

struct *esp_hf_client_cb_param_t*::*hf_client_at_response_param* **at_response**

HF callback param of ESP_HF_CLIENT_AT_RESPONSE_EVT

struct *esp_hf_client_cb_param_t*::*hf_client_cnum_param* **cnum**

HF callback param of ESP_HF_CLIENT_CNUM_EVT

struct *esp_hf_client_cb_param_t*::*hf_client_bsirparam* **bsir**

HF callback param of ESP_HF_CLIENT_BSIR_EVT

struct *esp_hf_client_cb_param_t*::*hf_client_binp_param* **binp**

HF callback param of ESP_HF_CLIENT_BINP_EVT

struct hf_client_at_response_param

#include <esp_hf_client_api.h> ESP_HF_CLIENT_AT_RESPONSE_EVT.

Public Members

esp_hf_at_response_code_t **code**

AT response code

esp_hf_cme_err_t **cme**

Extended Audio Gateway Error Result Code

struct hf_client_audio_stat_param

#include <esp_hf_client_api.h> ESP_HF_CLIENT_AUDIO_STATE_EVT.

Public Members

esp_hf_client_audio_state_t **state**

audio connection state

esp_bd_addr_t **remote_bda**

remote bluetooth device address

struct hf_client_battery_level_ind_param

#include <esp_hf_client_api.h> ESP_HF_CLIENT_CIND_BATTERY_LEVEL_EVT.

Public Members

int **value**

battery charge value, ranges from 0 to 5

struct hf_client_binp_param

#include <esp_hf_client_api.h> ESP_HF_CLIENT_BINP_EVT.

Public Members

const char ***number**

phone number corresponding to the last voice tag in the HF

struct hf_client_bsirparam

#include <esp_hf_client_api.h> ESP_HF_CLIENT_BSIR_EVT.

Public Members

esp_hf_client_in_band_ring_state_t **state**

setting state of in-band ring tone

struct hf_client_btrh_param

#include <esp_hf_client_api.h> ESP_HF_CLIENT_BTRH_EVT.

Public Members

esp_hf_btrh_status_t **status**

call hold and response status result code

struct hf_client_bvra_param

#include <esp_hf_client_api.h> ESP_HF_CLIENT_BVRA_EVT.

Public Members

esp_hf_vr_state_t **value**

voice recognition state

struct hf_client_call_held_ind_param

#include <esp_hf_client_api.h> ESP_HF_CLIENT_CIND_CALL_HELD_EVT.

Public Members

esp_hf_call_held_status_t **status**

bluetooth proprietary call hold status indicator

struct hf_client_call_ind_param

#include <esp_hf_client_api.h> ESP_HF_CLIENT_CIND_CALL_EVT.

Public Members

esp_hf_call_status_t **status**
call status indicator

struct hf_client_call_setup_ind_param
#include <esp_hf_client_api.h> ESP_HF_CLIENT_CIND_CALL_SETUP_EVT.

Public Members

esp_hf_call_setup_status_t **status**
call setup status indicator

struct hf_client_ccwa_param
#include <esp_hf_client_api.h> ESP_HF_CLIENT_CCWA_EVT.

Public Members

const char ***number**
phone number string of waiting call

struct hf_client_clcc_param
#include <esp_hf_client_api.h> ESP_HF_CLIENT_CLCC_EVT.

Public Members

int **idx**
numbering(starting with 1) of the call

esp_hf_current_call_direction_t **dir**
direction of the call

esp_hf_current_call_status_t **status**
status of the call

esp_hf_current_call_mpty_type_t **mpty**
multi-party flag

char ***number**
phone number(optional)

struct hf_client_clip_param
#include <esp_hf_client_api.h> ESP_HF_CLIENT_CLIP_EVT.

Public Members

const char ***number**

phone number string of call

struct hf_client_cnum_param

#include <esp_hf_client_api.h> ESP_HF_CLIENT_CNUM_EVT.

Public Members

const char ***number**

phone number string

esp_hf_subscriber_service_type_t **type**

service type that the phone number relates to

struct hf_client_conn_stat_param

#include <esp_hf_client_api.h> ESP_HF_CLIENT_CONNECTION_STATE_EVT.

Public Members

esp_hf_client_connection_state_t **state**

HF connection state

uint32_t **peer_feat**

AG supported features

uint32_t **chld_feat**

AG supported features on call hold and multiparty services

esp_bd_addr_t **remote_bda**

remote bluetooth device address

struct hf_client_current_operator_param

#include <esp_hf_client_api.h> ESP_HF_CLIENT_COPS_CURRENT_OPERATOR_EVT.

Public Members

const char ***name**

name of the network operator

struct hf_client_network_roaming_param

#include <esp_hf_client_api.h> ESP_HF_CLIENT_CIND_ROAMING_STATUS_EVT.

Public Members

esp_hf_roaming_status_t **status**
roaming status

struct hf_client_service_availability_param
#include <esp_hf_client_api.h> ESP_HF_CLIENT_CIND_SERVICE_AVAILABILITY_EVT.

Public Members

esp_hf_service_availability_status_t **status**
service availability status

struct hf_client_signal_strength_ind_param
#include <esp_hf_client_api.h> ESP_HF_CLIENT_CIND_SIGNAL_STRENGTH_EVT.

Public Members

int **value**
signal strength value, ranges from 0 to 5

struct hf_client_volume_control_param
#include <esp_hf_client_api.h> ESP_HF_CLIENT_VOLUME_CONTROL_EVT.

Public Members

esp_hf_volume_control_target_t **type**
volume control target, speaker or microphone

int **volume**
gain, ranges from 0 to 15

Macros

ESP_BT_HF_CLIENT_NUMBER_LEN

ESP_BT_HF_CLIENT_OPERATOR_NAME_LEN

ESP_HF_CLIENT_PEER_FEAT_3WAY

ESP_HF_CLIENT_PEER_FEAT_ECNR

ESP_HF_CLIENT_PEER_FEAT_VREC

ESP_HF_CLIENT_PEER_FEAT_INBAND

ESP_HF_CLIENT_PEER_FEAT_VTAG

ESP_HF_CLIENT_PEER_FEAT_REJECT

ESP_HF_CLIENT_PEER_FEAT_ECS

ESP_HF_CLIENT_PEER_FEAT_ECC

ESP_HF_CLIENT_PEER_FEAT_EXTERR

ESP_HF_CLIENT_PEER_FEAT_CODEC

ESP_HF_CLIENT_CHLD_FEAT_REL

ESP_HF_CLIENT_CHLD_FEAT_REL_ACC

ESP_HF_CLIENT_CHLD_FEAT_REL_X

ESP_HF_CLIENT_CHLD_FEAT_HOLD_ACC

ESP_HF_CLIENT_CHLD_FEAT_PRIV_X

ESP_HF_CLIENT_CHLD_FEAT_MERGE

ESP_HF_CLIENT_CHLD_FEAT_MERGE_DETACH

Type Definitions

typedef void (*esp_hf_client_incoming_data_cb_t)(const uint8_t *buf, uint32_t len)

HFP client incoming data callback function, the callback is useful in case of Voice Over HCI.

Parameters

- buf: : pointer to incoming data(payload of HCI synchronous data packet), the buffer is allocated inside bluetooth protocol stack and will be released after invoke of the callback is finished.
- len: : size(in bytes) in buf

typedef uint32_t (*esp_hf_client_outgoing_data_cb_t)(uint8_t *buf, uint32_t len)

HFP client outgoing data callback function, the callback is useful in case of Voice Over HCI. Once audio connection is set up and the application layer has prepared data to send, the lower layer will call this function to read data and then send. This callback is supposed to be implemented as non-blocking, and if data is not enough, return value 0 is supposed.

Return length of data successfully read

Parameters

- buf: : pointer to incoming data(payload of HCI synchronous data packet), the buffer is allocated inside bluetooth protocol stack and will be released after invoke of the callback is finished.
- len: : size(in bytes) in buf

typedef void (*esp_hf_client_cb_t)(*esp_hf_client_cb_event_t* event, *esp_hf_client_cb_param_t* *param)

HFP client callback function type.

Parameters

- event: : Event type
- param: : Pointer to callback parameter

Enumerations

enum esp_hf_client_connection_state_t

Bluetooth HFP RFCOMM connection and service level connection status.

Values:

ESP_HF_CLIENT_CONNECTION_STATE_DISCONNECTED = 0

RFCOMM data link channel released

ESP_HF_CLIENT_CONNECTION_STATE_CONNECTING

connecting remote device on the RFCOMM data link

ESP_HF_CLIENT_CONNECTION_STATE_CONNECTED

RFCOMM connection established

ESP_HF_CLIENT_CONNECTION_STATE_SLC_CONNECTED

service level connection established

ESP_HF_CLIENT_CONNECTION_STATE_DISCONNECTING

disconnecting with remote device on the RFCOMM dat link

enum esp_hf_client_audio_state_t

Bluetooth HFP audio connection status.

Values:

ESP_HF_CLIENT_AUDIO_STATE_DISCONNECTED = 0

audio connection released

ESP_HF_CLIENT_AUDIO_STATE_CONNECTING

audio connection has been initiated

ESP_HF_CLIENT_AUDIO_STATE_CONNECTED

audio connection is established

ESP_HF_CLIENT_AUDIO_STATE_CONNECTED_MSBC

mSBC audio connection is established

enum esp_hf_client_in_band_ring_state_t

in-band ring tone state

Values:

ESP_HF_CLIENT_IN_BAND_RINGTONE_NOT_PROVIDED = 0

ESP_HF_CLIENT_IN_BAND_RINGTONE_PROVIDED

enum esp_hf_client_cb_event_t

HF CLIENT callback events.

Values:

ESP_HF_CLIENT_CONNECTION_STATE_EVT = 0

connection state changed event

ESP_HF_CLIENT_AUDIO_STATE_EVT

audio connection state change event

ESP_HF_CLIENT_BVRA_EVT

voice recognition state change event

ESP_HF_CLIENT_CIND_CALL_EVT

call indication

ESP_HF_CLIENT_CIND_CALL_SETUP_EVT

call setup indication

ESP_HF_CLIENT_CIND_CALL_HELD_EVT

call held indication

ESP_HF_CLIENT_CIND_SERVICE_AVAILABILITY_EVT

network service availability indication

ESP_HF_CLIENT_CIND_SIGNAL_STRENGTH_EVT

signal strength indication

ESP_HF_CLIENT_CIND_ROAMING_STATUS_EVT

roaming status indication

ESP_HF_CLIENT_CIND_BATTERY_LEVEL_EVT

battery level indication

ESP_HF_CLIENT_COPS_CURRENT_OPERATOR_EVT

current operator information

ESP_HF_CLIENT_BTRH_EVT

call response and hold event

ESP_HF_CLIENT_CLIP_EVT

Calling Line Identification notification

ESP_HF_CLIENT_CCWA_EVT

call waiting notification

`ESP_HF_CLIENT_CLCC_EVT`
: list of current calls notification

`ESP_HF_CLIENT_VOLUME_CONTROL_EVT`
: audio volume control command from AG, provided by +VGM or +VGS message

`ESP_HF_CLIENT_AT_RESPONSE_EVT`
: AT command response event

`ESP_HF_CLIENT_CNUM_EVT`
: subscriber information response from AG

`ESP_HF_CLIENT_BSIR_EVT`
: setting of in-band ring tone

`ESP_HF_CLIENT_BINP_EVT`
: requested number of last voice tag from AG

`ESP_HF_CLIENT_RING_IND_EVT`
: ring indication event

3.1.5 NimBLE-based host APIs

Overview

Apache MyNewt NimBLE is a highly configurable and BT SIG qualifiable BLE stack providing both host and controller functionalities. ESP-IDF supports NimBLE host stack which is specifically ported for ESP32 platform and FreeRTOS. The underlying controller is still the same (as in case of Bluedroid) providing VHCI interface. Refer to NimBLE user guide for a complete list of features and additional information on NimBLE stack. Most features of NimBLE including BLE Mesh are supported by ESP-IDF. The porting layer is kept cleaner by maintaining all the existing APIs of NimBLE along with a single ESP-NimBLE API for initialization, making it simpler for the application developers.

Architecture

Currently, NimBLE host and controller support different transports such UART and RAM between them. However, RAM transport cannot be used as is in case of ESP as ESP controller supports VHCI interface and buffering schemes used by NimBLE host is incompatible with that used by ESP controller. Therefore, a new transport between NimBLE host and ESP controller has been added. This is depicted in the figure below. This layer is responsible for maintaining pool of transport buffers and formatting buffers exchanges between host and controller as per the requirements.

图 1: ESP NimBLE Stack

Threading Model

The NimBLE host can run inside the application thread or can have its own independent thread. This flexibility is inherently provided by NimBLE design. By default, a thread is spawned by the porting function `nimble_port_freertos_init`. This behavior can be changed by overriding the same function. For BLE Mesh, additional thread (advertising thread) is used which keeps on feeding advertisement events to the main thread.

Programming Sequence

To begin with, make sure that the NimBLE stack is enabled from menuconfig *Enable NimBLE host stack*, for this option to be visible please disable *Bluedroid Enable*.

Typical programming sequence with NimBLE stack consists of the following steps:

- Initialize NVS flash using *`nvs_flash_init()`* API. This is because ESP controller uses NVS during initialization.
- Call *`esp_nimble_hci_and_controller_init()`* to initialize ESP controller as well as transport layer. This will also link the host and controller modules together. Alternatively, if ESP controller is already initialized, then `esp_nimble_hci_init` can be called for the remaining initialization.
- Initialize the host stack using `nimble_port_init`.
- Initialize the required NimBLE host configuration parameters and callbacks
- Perform application specific tasks/initialization
- Run the thread for host stack using `nimble_port_freertos_init`

This documentation does not cover NimBLE APIs. Refer to NimBLE tutorial for more details on the programming sequence/NimBLE APIs for different scenarios.

API Reference

Header File

- nimble/esp-hci/include/esp_nimble_hci.h

Functions

esp_err_t **esp_nimble_hci_init**(void)

Initialize VHCI transport layer between NimBLE Host and ESP Bluetooth controller.

This function initializes the transport buffers to be exchanged between NimBLE host and ESP controller. It also registers required host callbacks with the controller.

Return

- ESP_OK if the initialization is successful
- Appropriate error code from esp_err_t in case of an error

esp_err_t **esp_nimble_hci_and_controller_init**(void)

Initialize ESP Bluetooth controller(link layer) and VHCI transport layer between NimBLE Host and ESP Bluetooth controller.

This function initializes ESP controller in BLE only mode and the transport buffers to be exchanged between NimBLE host and ESP controller. It also registers required host callbacks with the controller.

Below is the sequence of APIs to be called to init/enable NimBLE host and ESP controller:

```
void ble_host_task(void *param)
{
     nimble_port_run(); //This function will return only when nimble_port_stop() is␣
↪executed.
     nimble_port_freertos_deinit();
}

int ret = esp_nimble_hci_and_controller_init();
if (ret != ESP_OK) {
     ESP_LOGE(TAG, "esp_nimble_hci_and_controller_init() failed with error: %d",␣
↪ret);
     return;
}

nimble_port_init();

//Initialize the NimBLE Host configuration

nimble_port_freertos_init(ble_host_task);
```

nimble_port_freertos_init() is an optional call that creates a new task in which the NimBLE host will run. The task function should have a call to nimble_port_run(). If a separate task is not required,

calling nimble_port_run() will run the NimBLE host in the current task.

Return

- ESP_OK if the initialization is successful
- Appropriate error code from esp_err_t in case of an error

esp_err_t **esp_nimble_hci_deinit**(void)

Deinitialize VHCI transport layer between NimBLE Host and ESP Bluetooth controller.

Note This function should be called after the NimBLE host is deinitialized.

Return

- ESP_OK if the deinitialization is successful
- Appropriate error codes from esp_err_t in case of an error

esp_err_t **esp_nimble_hci_and_controller_deinit**(void)

Deinitialize VHCI transport layer between NimBLE Host and ESP Bluetooth controller and disable and deinitialize the controller.

Below is the sequence of APIs to be called to disable/deinit NimBLE host and ESP controller:

Note This function should not be executed in the context of Bluetooth host task.

Note This function should be called after the NimBLE host is deinitialized.

```
int ret = nimble_port_stop();
if (ret == 0) {
     nimble_port_deinit();

     ret = esp_nimble_hci_and_controller_deinit();
     if (ret != ESP_OK) {
         ESP_LOGE(TAG, "esp_nimble_hci_and_controller_deinit() failed with error: %d
↪", ret);
     }
}
```

If nimble_port_freertos_init() is used during initialization, then nimble_port_freertos_deinit() should be called in the host task after nimble_port_run().

Return

- ESP_OK if the deinitialization is successful
- Appropriate error codes from esp_err_t in case of an error

Macros

BLE_HCI_UART_H4_NONE

BLE_HCI_UART_H4_CMD

BLE_HCI_UART_H4_ACL

BLE_HCI_UART_H4_SCO

BLE_HCI_UART_H4_EVT

3.1.6 ESP-BLE-MESH

With various features of ESP-BLE-MESH, users can create a managed flooding mesh network for several scenarios, such as lighting, sensor and etc.

For an ESP32 to join and work on a ESP-BLE-MESH network, it must be provisioned firstly. By provisioning, the ESP32, as an unprovisioned device, will join the ESP-BLE-MESH network and become a ESP-BLE-MESH node, communicating with other nodes within or beyond the radio range.

Apart from ESP-BLE-MESH nodes, inside ESP-BLE-MESH network, there is also ESP32 that works as ESP-BLE-MESH Provisioner, which could provision unprovisioned devices into ESP-BLE-MESH nodes and configure the nodes with various features.

For information how to start using ESP32 and ESP-BLE-MESH, please see the Section *ESP-BLE-MESH 快速入门*. If you are interested in information on ESP-BLE-MESH architecture, including some details of software implementation, please see Section *ESP-BLE-MESH 架构*.

Application Examples and Demos

Please refer to Sections *ESP-BLE-MESH 示例* and *ESP-BLE-MESH 演示视频*.

API Reference

ESP-BLE-MESH APIs are divided into the following parts:

- *ESP-BLE-MESH Definitions*
- *ESP-BLE-MESH Core API Reference*
- *ESP-BLE-MESH Models API Reference*

ESP-BLE-MESH Definitions

This section contains only one header file, which lists the following items of ESP-BLE-MESH.

- ID of all the models and related message opcodes

- Structs of model, element and Composition Data
- Structs of used by ESP-BLE-MESH Node/Provisioner for provisioning
- Structs used to transmit/receive messages
- Event types and related event parameters

Header File

- bt/esp_ble_mesh/api/esp_ble_mesh_defs.h

Unions

union esp_ble_mesh_prov_cb_param_t

#include <esp_ble_mesh_defs.h> BLE Mesh Node/Provisioner callback parameters union.

Public Members

struct *esp_ble_mesh_prov_cb_param_t*::*ble_mesh_prov_register_comp_param* **prov_register_comp**

Event parameter of ESP_BLE_MESH_PROV_REGISTER_COMP_EVT

struct *esp_ble_mesh_prov_cb_param_t*::*ble_mesh_set_unprov_dev_name_comp_param* **node_set_unprov_dev_n**

Event parameter of ESP_BLE_MESH_NODE_SET_UNPROV_DEV_NAME_COMP_EVT

struct *esp_ble_mesh_prov_cb_param_t*::*ble_mesh_prov_enable_comp_param* **node_prov_enable_comp**

Event parameter of ESP_BLE_MESH_NODE_PROV_ENABLE_COMP_EVT

struct *esp_ble_mesh_prov_cb_param_t*::*ble_mesh_prov_disable_comp_param* **node_prov_disable_comp**

Event parameter of ESP_BLE_MESH_NODE_PROV_DISABLE_COMP_EVT

struct *esp_ble_mesh_prov_cb_param_t*::*ble_mesh_link_open_evt_param* **node_prov_link_open**

Event parameter of ESP_BLE_MESH_NODE_PROV_LINK_OPEN_EVT

struct *esp_ble_mesh_prov_cb_param_t*::*ble_mesh_link_close_evt_param* **node_prov_link_close**

Event parameter of ESP_BLE_MESH_NODE_PROV_LINK_CLOSE_EVT

struct *esp_ble_mesh_prov_cb_param_t*::*ble_mesh_output_num_evt_param* **node_prov_output_num**

Event parameter of ESP_BLE_MESH_NODE_PROV_OUTPUT_NUMBER_EVT

struct *esp_ble_mesh_prov_cb_param_t*::*ble_mesh_output_str_evt_param* **node_prov_output_str**

Event parameter of ESP_BLE_MESH_NODE_PROV_OUTPUT_STRING_EVT

struct *esp_ble_mesh_prov_cb_param_t*::*ble_mesh_input_evt_param* **node_prov_input**

Event parameter of ESP_BLE_MESH_NODE_PROV_INPUT_EVT

struct *esp_ble_mesh_prov_cb_param_t*::*ble_mesh_provision_complete_evt_param* **node_prov_complete**

Event parameter of ESP_BLE_MESH_NODE_PROV_COMPLETE_EVT

struct *esp_ble_mesh_prov_cb_param_t*::*ble_mesh_provision_reset_param* **node_prov_reset**
Event parameter of ESP_BLE_MESH_NODE_PROV_RESET_EVT

struct *esp_ble_mesh_prov_cb_param_t*::*ble_mesh_set_oob_pub_key_comp_param* **node_prov_set_oob_pub_key**
Event parameter of ESP_BLE_MESH_NODE_PROV_SET_OOB_PUB_KEY_COMP_EVT

struct *esp_ble_mesh_prov_cb_param_t*::*ble_mesh_input_number_comp_param* **node_prov_input_num_comp**
Event parameter of ESP_BLE_MESH_NODE_PROV_INPUT_NUM_COMP_EVT

struct *esp_ble_mesh_prov_cb_param_t*::*ble_mesh_input_string_comp_param* **node_prov_input_str_comp**
Event parameter of ESP_BLE_MESH_NODE_PROV_INPUT_STR_COMP_EVT

struct *esp_ble_mesh_prov_cb_param_t*::*ble_mesh_proxy_identity_enable_comp_param* **node_proxy_identity_en**
Event parameter of ESP_BLE_MESH_NODE_PROXY_IDENTITY_ENABLE_COMP_EVT

struct *esp_ble_mesh_prov_cb_param_t*::*ble_mesh_proxy_gatt_enable_comp_param* **node_proxy_gatt_enable_co**
Event parameter of ESP_BLE_MESH_NODE_PROXY_GATT_ENABLE_COMP_EVT

struct *esp_ble_mesh_prov_cb_param_t*::*ble_mesh_proxy_gatt_disable_comp_param* **node_proxy_gatt_disable_**
Event parameter of ESP_BLE_MESH_NODE_PROXY_GATT_DISABLE_COMP_EVT

struct *esp_ble_mesh_prov_cb_param_t*::*ble_mesh_node_add_local_net_key_comp_param* **node_add_net_key_co**
Event parameter of ESP_BLE_MESH_NODE_ADD_LOCAL_NET_KEY_COMP_EVT

struct *esp_ble_mesh_prov_cb_param_t*::*ble_mesh_node_add_local_app_key_comp_param* **node_add_app_key_co**
Event parameter of ESP_BLE_MESH_NODE_ADD_LOCAL_APP_KEY_COMP_EVT

struct *esp_ble_mesh_prov_cb_param_t*::*ble_mesh_node_bind_local_mod_app_comp_param* **node_bind_app_key**
Event parameter of ESP_BLE_MESH_NODE_BIND_APP_KEY_TO_MODEL_COMP_EVT

struct *esp_ble_mesh_prov_cb_param_t*::*ble_mesh_provisioner_recv_unprov_adv_pkt_param* **provisioner_recv_**
Event parameter of ESP_BLE_MESH_PROVISIONER_RECV_UNPROV_ADV_PKT_EVT

struct *esp_ble_mesh_prov_cb_param_t*::*ble_mesh_provisioner_prov_enable_comp_param* **provisioner_prov_ena**
Event parameter of ESP_BLE_MESH_PROVISIONER_PROV_ENABLE_COMP_EVT

struct *esp_ble_mesh_prov_cb_param_t*::*ble_mesh_provisioner_prov_disable_comp_param* **provisioner_prov_di**
Event parameter of ESP_BLE_MESH_PROVISIONER_PROV_DISABLE_COMP_EVT

struct *esp_ble_mesh_prov_cb_param_t*::*ble_mesh_provisioner_link_open_evt_param* **provisioner_prov_link_o**
Event parameter of ESP_BLE_MESH_PROVISIONER_PROV_LINK_OPEN_EVT

struct *esp_ble_mesh_prov_cb_param_t*::*ble_mesh_provisioner_prov_read_oob_pub_key_evt_param* **provisioner**
Event parameter of ESP_BLE_MESH_PROVISIONER_PROV_READ_OOB_PUB_KEY_EVT

struct *esp_ble_mesh_prov_cb_param_t*::*ble_mesh_provisioner_prov_input_evt_param* **provisioner_prov_input**
Event parameter of ESP_BLE_MESH_PROVISIONER_PROV_INPUT_EVT

struct *esp_ble_mesh_prov_cb_param_t*::*ble_mesh_provisioner_prov_output_evt_param* **provisioner_prov_outp**
Event parameter of ESP_BLE_MESH_PROVISIONER_PROV_OUTPUT_EVT

struct *esp_ble_mesh_prov_cb_param_t*::*ble_mesh_provisioner_link_close_evt_param* **provisioner_prov_link_c**
Event parameter of ESP_BLE_MESH_PROVISIONER_PROV_LINK_CLOSE_EVT

struct *esp_ble_mesh_prov_cb_param_t*::*ble_mesh_provisioner_prov_comp_param* **provisioner_prov_complete**
Event parameter of ESP_BLE_MESH_PROVISIONER_PROV_COMPLETE_EVT

struct *esp_ble_mesh_prov_cb_param_t*::*ble_mesh_provisioner_add_unprov_dev_comp_param* **provisioner_add_**
Event parameter of ESP_BLE_MESH_PROVISIONER_ADD_UNPROV_DEV_COMP_EVT

struct *esp_ble_mesh_prov_cb_param_t*::*ble_mesh_provisioner_prov_dev_with_addr_comp_param* **provisioner_**
Event parameter of ESP_BLE_MESH_PROVISIONER_PROV_DEV_WITH_ADDR_COMP_EVT

struct *esp_ble_mesh_prov_cb_param_t*::*ble_mesh_provisioner_delete_dev_comp_param* **provisioner_delete_de**
Event parameter of ESP_BLE_MESH_PROVISIONER_DELETE_DEV_COMP_EVT

struct *esp_ble_mesh_prov_cb_param_t*::*ble_mesh_provisioner_set_dev_uuid_match_comp_param* **provisioner_**
Event parameter of ESP_BLE_MESH_PROVISIONER_SET_DEV_UUID_MATCH_COMP_EVT

struct *esp_ble_mesh_prov_cb_param_t*::*ble_mesh_provisioner_set_prov_data_info_comp_param* **provisioner_s**
Event parameter of ESP_BLE_MESH_PROVISIONER_SET_PROV_DATA_INFO_COMP_EVT

struct *esp_ble_mesh_prov_cb_param_t*::*ble_mesh_provisioner_set_static_oob_val_comp_param* **provisioner_se**
Event parameter of ESP_BLE_MESH_PROVISIONER_SET_STATIC_OOB_VALUE_COMP_EVT

struct *esp_ble_mesh_prov_cb_param_t*::*ble_mesh_provisioner_set_primary_elem_addr_comp_param* **provision**
Event parameter of ESP_BLE_MESH_PROVISIONER_SET_PRIMARY_ELEM_ADDR_COMP_EVT

struct *esp_ble_mesh_prov_cb_param_t*::*ble_mesh_provisioner_prov_read_oob_pub_key_comp_param* **provisio**
Event parameter of ESP_BLE_MESH_PROVISIONER_PROV_READ_OOB_PUB_KEY_COMP_EVT

struct *esp_ble_mesh_prov_cb_param_t*::*ble_mesh_provisioner_prov_input_num_comp_param* **provisioner_pro**
Event parameter of ESP_BLE_MESH_PROVISIONER_PROV_INPUT_NUMBER_COMP_EVT

struct *esp_ble_mesh_prov_cb_param_t*::*ble_mesh_provisioner_prov_input_str_comp_param* **provisioner_prov_**
Event parameter of ESP_BLE_MESH_PROVISIONER_PROV_INPUT_STRING_COMP_EVT

struct *esp_ble_mesh_prov_cb_param_t*::*ble_mesh_provisioner_set_node_name_comp_param* **provisioner_set_**
Event parameter of ESP_BLE_MESH_PROVISIONER_SET_NODE_NAME_COMP_EVT

struct *esp_ble_mesh_prov_cb_param_t*::*ble_mesh_provisioner_add_local_app_key_comp_param* **provisioner_a**
Event parameter of ESP_BLE_MESH_PROVISIONER_ADD_LOCAL_APP_KEY_COMP_EVT

struct *esp_ble_mesh_prov_cb_param_t*::*ble_mesh_provisioner_update_local_app_key_comp_param* **provisioner**
Event parameter of ESP_BLE_MESH_PROVISIONER_UPDATE_LOCAL_APP_KEY_COMP_EVT

struct *esp_ble_mesh_prov_cb_param_t*::*ble_mesh_provisioner_bind_local_mod_app_comp_param* **provisioner_**
Event parameter of ESP_BLE_MESH_PROVISIONER_BIND_APP_KEY_TO_MODEL_COMP_EVT

struct *esp_ble_mesh_prov_cb_param_t*::*ble_mesh_provisioner_add_local_net_key_comp_param* **provisioner_ad**
Event parameter of ESP_BLE_MESH_PROVISIONER_ADD_LOCAL_NET_KEY_COMP_EVT

struct *esp_ble_mesh_prov_cb_param_t*::*ble_mesh_provisioner_update_local_net_key_comp_param* **provisioner**
Event parameter of ESP_BLE_MESH_PROVISIONER_UPDATE_LOCAL_NET_KEY_COMP_EVT

struct *esp_ble_mesh_prov_cb_param_t*::*ble_mesh_provisioner_store_node_comp_data_comp_param* **provisione**
Event parameter of ESP_BLE_MESH_PROVISIONER_STORE_NODE_COMP_DATA_COMP_EVT

struct *esp_ble_mesh_prov_cb_param_t*::*ble_mesh_provisioner_delete_node_with_uuid_comp_param* **provisione**
Event parameter of ESP_BLE_MESH_PROVISIONER_DELETE_NODE_WITH_UUID_COMP_EVT

struct *esp_ble_mesh_prov_cb_param_t*::*ble_mesh_provisioner_delete_node_with_addr_comp_param* **provisione**
Event parameter of ESP_BLE_MESH_PROVISIONER_DELETE_NODE_WITH_ADDR_COMP_EVT

int **err_code**
Indicate the result of enabling/disabling to receive heartbeat messages by the Provisioner

Indicate the result of setting the heartbeat filter type by the Provisioner

Indicate the result of setting the heartbeat filter address by the Provisioner

Indicate the result of directly erasing settings by the Provisioner

Indicate the result of opening settings with index by the Provisioner

Indicate the result of opening settings with user id by the Provisioner

Indicate the result of closing settings with index by the Provisioner

Indicate the result of closing settings with user id by the Provisioner

Indicate the result of deleting settings with index by the Provisioner

Indicate the result of deleting settings with user id by the Provisioner

bool **enable**
Indicate enabling or disabling receiving heartbeat messages

struct *esp_ble_mesh_prov_cb_param_t*::[**anonymous**] **provisioner_enable_heartbeat_recv_comp**
ESP_BLE_MESH_PROVISIONER_ENABLE_HEARTBEAT_RECV_COMP_EVT.

Event parameters of ESP_BLE_MESH_PROVISIONER_ENABLE_HEARTBEAT_RECV_COMP_EVT

uint8_t **type**
Type of the filter used for receiving heartbeat messages

struct *esp_ble_mesh_prov_cb_param_t*::[**anonymous**] **provisioner_set_heartbeat_filter_type_comp**
ESP_BLE_MESH_PROVISIONER_SET_HEARTBEAT_FILTER_TYPE_COMP_EVT.

Event parameters of ESP_BLE_MESH_PROVISIONER_SET_HEARTBEAT_FILTER_TYPE_COMP_EVT

uint8_t **op**
Operation (add, remove, clean)

uint16_t **hb_src**
Heartbeat source address

uint16_t **hb_dst**

Heartbeat destination address

struct *esp_ble_mesh_prov_cb_param_t*::[**anonymous**] **provisioner_set_heartbeat_filter_info_comp**

ESP_BLE_MESH_PROVISIONER_SET_HEARTBEAT_FILTER_INFO_COMP_EVT.

Event parameters of ESP_BLE_MESH_PROVISIONER_SET_HEARTBEAT_FILTER_INFO_COMP_EVT

uint8_t **init_ttl**

Heartbeat InitTTL

uint8_t **rx_ttl**

Heartbeat RxTTL

uint8_t **hops**

Heartbeat hops (InitTTL - RxTTL + 1)

uint16_t **feature**

Bit field of currently active features of the node

int8_t **rssi**

RSSI of the heartbeat message

struct *esp_ble_mesh_prov_cb_param_t*::[**anonymous**] **provisioner_recv_heartbeat**

ESP_BLE_MESH_PROVISIONER_RECV_HEARTBEAT_MESSAGE_EVT.

Event parameters of ESP_BLE_MESH_PROVISIONER_RECV_HEARTBEAT_MESSAGE_EVT

struct *esp_ble_mesh_prov_cb_param_t*::[**anonymous**] **provisioner_direct_erase_settings_comp**

ESP_BLE_MESH_PROVISIONER_DRIECT_ERASE_SETTINGS_COMP_EVT.

Event parameters of ESP_BLE_MESH_PROVISIONER_DRIECT_ERASE_SETTINGS_COMP_EVT

uint8_t **index**

Index of Provisioner settings

struct *esp_ble_mesh_prov_cb_param_t*::[**anonymous**] **provisioner_open_settings_with_index_comp**

ESP_BLE_MESH_PROVISIONER_OPEN_SETTINGS_WITH_INDEX_COMP_EVT.

Event parameter of ESP_BLE_MESH_PROVISIONER_OPEN_SETTINGS_WITH_INDEX_COMP_EVT

char **uid**[**ESP_BLE_MESH_SETTINGS_UID_SIZE** + 1]

Provisioner settings user id

struct *esp_ble_mesh_prov_cb_param_t*::[**anonymous**] **provisioner_open_settings_with_uid_comp**

ESP_BLE_MESH_PROVISIONER_OPEN_SETTINGS_WITH_UID_COMP_EVT.

Event parameters of ESP_BLE_MESH_PROVISIONER_OPEN_SETTINGS_WITH_UID_COMP_EVT

struct *esp_ble_mesh_prov_cb_param_t*::[**anonymous**] **provisioner_close_settings_with_index_comp**

ESP_BLE_MESH_PROVISIONER_CLOSE_SETTINGS_WITH_INDEX_COMP_EVT.

Event parameter of ESP_BLE_MESH_PROVISIONER_CLOSE_SETTINGS_WITH_INDEX_COMP_EVT

struct *esp_ble_mesh_prov_cb_param_t*::[**anonymous**] **provisioner_close_settings_with_uid_comp**

ESP_BLE_MESH_PROVISIONER_CLOSE_SETTINGS_WITH_UID_COMP_EVT.

Event parameters of ESP_BLE_MESH_PROVISIONER_CLOSE_SETTINGS_WITH_UID_COMP_EVT

struct *esp_ble_mesh_prov_cb_param_t*::[**anonymous**] **provisioner_delete_settings_with_index_comp**

ESP_BLE_MESH_PROVISIONER_DELETE_SETTINGS_WITH_INDEX_COMP_EVT.

Event parameter of ESP_BLE_MESH_PROVISIONER_DELETE_SETTINGS_WITH_INDEX_COMP_EVT

struct *esp_ble_mesh_prov_cb_param_t*::[**anonymous**] **provisioner_delete_settings_with_uid_comp**

ESP_BLE_MESH_PROVISIONER_DELETE_SETTINGS_WITH_UID_COMP_EVT.

Event parameters of ESP_BLE_MESH_PROVISIONER_DELETE_SETTINGS_WITH_UID_COMP_EVT

struct *esp_ble_mesh_prov_cb_param_t*::*ble_mesh_set_fast_prov_info_comp_param* **set_fast_prov_info_comp**

Event parameter of ESP_BLE_MESH_SET_FAST_PROV_INFO_COMP_EVT

struct *esp_ble_mesh_prov_cb_param_t*::*ble_mesh_set_fast_prov_action_comp_param* **set_fast_prov_action_c**

Event parameter of ESP_BLE_MESH_SET_FAST_PROV_ACTION_COMP_EVT

struct *esp_ble_mesh_prov_cb_param_t*::*ble_mesh_heartbeat_msg_recv_param* **heartbeat_msg_recv**

Event parameter of ESP_BLE_MESH_HEARTBEAT_MESSAGE_RECV_EVT

struct *esp_ble_mesh_prov_cb_param_t*::*ble_mesh_lpn_enable_comp_param* **lpn_enable_comp**

Event parameter of ESP_BLE_MESH_LPN_ENABLE_COMP_EVT

struct *esp_ble_mesh_prov_cb_param_t*::*ble_mesh_lpn_disable_comp_param* **lpn_disable_comp**

Event parameter of ESP_BLE_MESH_LPN_DISABLE_COMP_EVT

struct *esp_ble_mesh_prov_cb_param_t*::*ble_mesh_lpn_poll_comp_param* **lpn_poll_comp**

Event parameter of ESP_BLE_MESH_LPN_POLL_COMP_EVT

struct *esp_ble_mesh_prov_cb_param_t*::*ble_mesh_lpn_friendship_establish_param* **lpn_friendship_establish**

Event parameter of ESP_BLE_MESH_LPN_FRIENDSHIP_ESTABLISH_EVT

struct *esp_ble_mesh_prov_cb_param_t*::*ble_mesh_lpn_friendship_terminate_param* **lpn_friendship_terminate**

Event parameter of ESP_BLE_MESH_LPN_FRIENDSHIP_TERMINATE_EVT

struct *esp_ble_mesh_prov_cb_param_t*::*ble_mesh_friend_friendship_establish_param* **frnd_friendship_establi**

Event parameter of ESP_BLE_MESH_FRIEND_FRIENDSHIP_ESTABLISH_EVT

struct *esp_ble_mesh_prov_cb_param_t*::*ble_mesh_friend_friendship_terminate_param* **frnd_friendship_termin**

Event parameter of ESP_BLE_MESH_FRIEND_FRIENDSHIP_TERMINATE_EVT

struct *esp_ble_mesh_prov_cb_param_t*::*ble_mesh_proxy_client_recv_adv_pkt_param* **proxy_client_recv_adv_p**

Event parameter of ESP_BLE_MESH_PROXY_CLIENT_RECV_ADV_PKT_EVT

struct *esp_ble_mesh_prov_cb_param_t*::*ble_mesh_proxy_client_connected_param* **proxy_client_connected**

Event parameter of ESP_BLE_MESH_PROXY_CLIENT_CONNECTED_EVT

struct *esp_ble_mesh_prov_cb_param_t*::*ble_mesh_proxy_client_disconnected_param* **proxy_client_disconnecte**

Event parameter of ESP_BLE_MESH_PROXY_CLIENT_DISCONNECTED_EVT

struct *esp_ble_mesh_prov_cb_param_t*::*ble_mesh_proxy_client_recv_filter_status_param* **proxy_client_recv_f**
Event parameter of ESP_BLE_MESH_PROXY_CLIENT_RECV_FILTER_STATUS_EVT

struct *esp_ble_mesh_prov_cb_param_t*::*ble_mesh_proxy_client_connect_comp_param* **proxy_client_connect_c**
Event parameter of ESP_BLE_MESH_PROXY_CLIENT_CONNECT_COMP_EVT

struct *esp_ble_mesh_prov_cb_param_t*::*ble_mesh_proxy_client_disconnect_comp_param* **proxy_client_disconn**
Event parameter of ESP_BLE_MESH_PROXY_CLIENT_DISCONNECT_COMP_EVT

struct *esp_ble_mesh_prov_cb_param_t*::*ble_mesh_proxy_client_set_filter_type_comp_param* **proxy_client_set**
Event parameter of ESP_BLE_MESH_PROXY_CLIENT_SET_FILTER_TYPE_COMP_EVT

struct *esp_ble_mesh_prov_cb_param_t*::*ble_mesh_proxy_client_add_filter_addr_comp_param* **proxy_client_ad**
Event parameter of ESP_BLE_MESH_PROXY_CLIENT_ADD_FILTER_ADDR_COMP_EVT

struct *esp_ble_mesh_prov_cb_param_t*::*ble_mesh_proxy_client_remove_filter_addr_comp_param* **proxy_client**
Event parameter of ESP_BLE_MESH_PROXY_CLIENT_REMOVE_FILTER_ADDR_COMP_EVT

struct *esp_ble_mesh_prov_cb_param_t*::*ble_mesh_start_ble_advertising_comp_param* **start_ble_advertising_**
Event parameter of ESP_BLE_MESH_START_BLE_ADVERTISING_COMP_EVT

struct *esp_ble_mesh_prov_cb_param_t*::*ble_mesh_stop_ble_advertising_comp_param* **stop_ble_advertising_co**
Event parameter of ESP_BLE_MESH_STOP_BLE_ADVERTISING_COMP_EVT

struct *esp_ble_mesh_prov_cb_param_t*::*ble_mesh_model_sub_group_addr_comp_param* **model_sub_group_addr**
Event parameters of ESP_BLE_MESH_MODEL_SUBSCRIBE_GROUP_ADDR_COMP_EVT

struct *esp_ble_mesh_prov_cb_param_t*::*ble_mesh_model_unsub_group_addr_comp_param* **model_unsub_group_**
Event parameters of ESP_BLE_MESH_MODEL_UNSUBSCRIBE_GROUP_ADDR_COMP_EVT

struct *esp_ble_mesh_prov_cb_param_t*::*ble_mesh_deinit_mesh_comp_param* **deinit_mesh_comp**
Event parameter of ESP_BLE_MESH_DEINIT_MESH_COMP_EVT

struct ble_mesh_deinit_mesh_comp_param
#include <esp_ble_mesh_defs.h> ESP_BLE_MESH_DEINIT_MESH_COMP_EVT.

Public Members

int **err_code**
Indicate the result of BLE Mesh deinitialization

struct ble_mesh_friend_friendship_establish_param
#include <esp_ble_mesh_defs.h> ESP_BLE_MESH_FRIEND_FRIENDSHIP_ESTABLISH_EVT.

Public Members

uint16_t **lpn_addr**
Low Power Node unicast address

struct ble_mesh_friend_friendship_terminate_param

#include <esp_ble_mesh_defs.h> ESP_BLE_MESH_FRIEND_FRIENDSHIP_TERMINATE_EVT.

Public Types

enum [anonymous]

This enum value is the reason of friendship termination on the friend node side

Values:

ESP_BLE_MESH_FRND_FRIENDSHIP_TERMINATE_ESTABLISH_FAIL

Friend Offer has been sent, but Friend Offer is not received within 1 second, friendship fails to be established

ESP_BLE_MESH_FRND_FRIENDSHIP_TERMINATE_POLL_TIMEOUT

Friendship is established, PollTimeout timer expires and no Friend Poll/Sub Add/Sub Remove is received

ESP_BLE_MESH_FRND_FRIENDSHIP_TERMINATE_RECV_FRND_REQ

Receive Friend Request from existing Low Power Node

ESP_BLE_MESH_FRND_FRIENDSHIP_TERMINATE_RECV_FRND_CLEAR

Receive Friend Clear from other friend node

ESP_BLE_MESH_FRND_FRIENDSHIP_TERMINATE_DISABLE

Friend feature disabled or corresponding NetKey is deleted

Public Members

uint16_t **lpn_addr**

Low Power Node unicast address

esp_ble_mesh_prov_cb_param_t::*ble_mesh_friend_friendship_terminate_param*::[**anonymous**] **reason**

This enum value is the reason of friendship termination on the friend node side Friendship terminated reason

struct ble_mesh_heartbeat_msg_recv_param

#include <esp_ble_mesh_defs.h> ESP_BLE_MESH_HEARTBEAT_MESSAGE_RECV_EVT.

Public Members

uint8_t **hops**

Heartbeat hops (InitTTL - RxTTL + 1)

uint16_t **feature**

Bit field of currently active features of the node

struct ble_mesh_input_evt_param

#include <esp_ble_mesh_defs.h> ESP_BLE_MESH_NODE_PROV_INPUT_EVT.

Public Members

esp_ble_mesh_input_action_t **action**

Action of Input OOB Authentication

uint8_t **size**

Size of Input OOB Authentication

struct ble_mesh_input_number_comp_param

#include <esp_ble_mesh_defs.h> ESP_BLE_MESH_NODE_PROV_INPUT_NUM_COMP_EVT.

Public Members

int **err_code**

Indicate the result of inputting number

struct ble_mesh_input_string_comp_param

#include <esp_ble_mesh_defs.h> ESP_BLE_MESH_NODE_PROV_INPUT_STR_COMP_EVT.

Public Members

int **err_code**

Indicate the result of inputting string

struct ble_mesh_link_close_evt_param

#include <esp_ble_mesh_defs.h> ESP_BLE_MESH_NODE_PROV_LINK_CLOSE_EVT.

Public Members

esp_ble_mesh_prov_bearer_t **bearer**

Type of the bearer used when device link is closed

struct ble_mesh_link_open_evt_param

#include <esp_ble_mesh_defs.h> ESP_BLE_MESH_NODE_PROV_LINK_OPEN_EVT.

Public Members

esp_ble_mesh_prov_bearer_t **bearer**

Type of the bearer used when device link is open

struct ble_mesh_lpn_disable_comp_param

#include <esp_ble_mesh_defs.h> ESP_BLE_MESH_LPN_DISABLE_COMP_EVT.

Public Members

int **err_code**

Indicate the result of disabling LPN functionality

struct ble_mesh_lpn_enable_comp_param

#include <esp_ble_mesh_defs.h> ESP_BLE_MESH_LPN_ENABLE_COMP_EVT.

Public Members

int **err_code**

Indicate the result of enabling LPN functionality

struct ble_mesh_lpn_friendship_establish_param

#include <esp_ble_mesh_defs.h> ESP_BLE_MESH_LPN_FRIENDSHIP_ESTABLISH_EVT.

Public Members

uint16_t **friend_addr**

Friend Node unicast address

struct ble_mesh_lpn_friendship_terminate_param

#include <esp_ble_mesh_defs.h> ESP_BLE_MESH_LPN_FRIENDSHIP_TERMINATE_EVT.

Public Members

uint16_t **friend_addr**

Friend Node unicast address

struct ble_mesh_lpn_poll_comp_param

#include <esp_ble_mesh_defs.h> ESP_BLE_MESH_LPN_POLL_COMP_EVT.

Public Members

int **err_code**

Indicate the result of sending Friend Poll

struct ble_mesh_model_sub_group_addr_comp_param

#include <esp_ble_mesh_defs.h> ESP_BLE_MESH_MODEL_SUBSCRIBE_GROUP_ADDR_COMP_EVT

Public Members

int **err_code**
Indicate the result of local model subscribing group address

uint16_t **element_addr**
Element address

uint16_t **company_id**
Company ID

uint16_t **model_id**
Model ID

uint16_t **group_addr**
Group Address

struct ble_mesh_model_unsub_group_addr_comp_param
#include <esp_ble_mesh_defs.h> ESP_BLE_MESH_MODEL_UNSUBSCRIBE_GROUP_ADDR_COMP_E

Public Members

int **err_code**
Indicate the result of local model unsubscribing group address

uint16_t **element_addr**
Element address

uint16_t **company_id**
Company ID

uint16_t **model_id**
Model ID

uint16_t **group_addr**
Group Address

struct ble_mesh_node_add_local_app_key_comp_param
#include <esp_ble_mesh_defs.h> ESP_BLE_MESH_NODE_ADD_LOCAL_APP_KEY_COMP_EVT.

Public Members

int **err_code**
Indicate the result of adding local AppKey by the node

uint16_t **net_idx**
NetKey Index

uint16_t **app_idx**
AppKey Index

struct ble_mesh_node_add_local_net_key_comp_param
#include <esp_ble_mesh_defs.h> ESP_BLE_MESH_NODE_ADD_LOCAL_NET_KEY_COMP_EVT.

Public Members

int **err_code**
Indicate the result of adding local NetKey by the node

uint16_t **net_idx**
NetKey Index

struct ble_mesh_node_bind_local_mod_app_comp_param
#include <esp_ble_mesh_defs.h> ESP_BLE_MESH_NODE_BIND_APP_KEY_TO_MODEL_COMP_EV

Public Members

int **err_code**
Indicate the result of binding AppKey with model by the node

uint16_t **element_addr**
Element address

uint16_t **app_idx**
AppKey Index

uint16_t **company_id**
Company ID

uint16_t **model_id**
Model ID

struct ble_mesh_output_num_evt_param
#include <esp_ble_mesh_defs.h> ESP_BLE_MESH_NODE_PROV_OUTPUT_NUMBER_EVT.

Public Members

esp_ble_mesh_output_action_t **action**
Action of Output OOB Authentication

uint32_t **number**
Number of Output OOB Authentication

struct ble_mesh_output_str_evt_param
#include <esp_ble_mesh_defs.h> ESP_BLE_MESH_NODE_PROV_OUTPUT_STRING_EVT.

Public Members

char **string**[8]
String of Output OOB Authentication

struct ble_mesh_prov_disable_comp_param
#include <esp_ble_mesh_defs.h> ESP_BLE_MESH_NODE_PROV_DISABLE_COMP_EVT.

Public Members

int **err_code**
Indicate the result of disabling BLE Mesh device

struct ble_mesh_prov_enable_comp_param
#include <esp_ble_mesh_defs.h> ESP_BLE_MESH_NODE_PROV_ENABLE_COMP_EVT.

Public Members

int **err_code**
Indicate the result of enabling BLE Mesh device

struct ble_mesh_prov_register_comp_param
#include <esp_ble_mesh_defs.h> ESP_BLE_MESH_PROV_REGISTER_COMP_EVT.

Public Members

int **err_code**
Indicate the result of BLE Mesh initialization

struct ble_mesh_provision_complete_evt_param
#include <esp_ble_mesh_defs.h> ESP_BLE_MESH_NODE_PROV_COMPLETE_EVT.

Public Members

uint16_t **net_idx**
NetKey Index

uint8_t **net_key**[16]
NetKey

uint16_t **addr**
Primary address

uint8_t **flags**
Flags

uint32_t **iv_index**

IV Index

struct ble_mesh_provision_reset_param

#include <esp_ble_mesh_defs.h> ESP_BLE_MESH_NODE_PROV_RESET_EVT.

struct ble_mesh_provisioner_add_local_app_key_comp_param

#include <esp_ble_mesh_defs.h> ESP_BLE_MESH_PROVISIONER_ADD_LOCAL_APP_KEY_COMP_

Public Members

int **err_code**

Indicate the result of adding local AppKey by the Provisioner

uint16_t **net_idx**

NetKey Index

uint16_t **app_idx**

AppKey Index

struct ble_mesh_provisioner_add_local_net_key_comp_param

#include <esp_ble_mesh_defs.h> ESP_BLE_MESH_PROVISIONER_ADD_LOCAL_NET_KEY_COMP_

Public Members

int **err_code**

Indicate the result of adding local NetKey by the Provisioner

uint16_t **net_idx**

NetKey Index

struct ble_mesh_provisioner_add_unprov_dev_comp_param

#include <esp_ble_mesh_defs.h> ESP_BLE_MESH_PROVISIONER_ADD_UNPROV_DEV_COMP_EVT

Public Members

int **err_code**

Indicate the result of adding device into queue by the Provisioner

struct ble_mesh_provisioner_bind_local_mod_app_comp_param

#include <esp_ble_mesh_defs.h> ESP_BLE_MESH_PROVISIONER_BIND_APP_KEY_TO_MODEL_CO

Public Members

int **err_code**

Indicate the result of binding AppKey with model by the Provisioner

uint16_t **element_addr**
Element address

uint16_t **app_idx**
AppKey Index

uint16_t **company_id**
Company ID

uint16_t **model_id**
Model ID

struct ble_mesh_provisioner_delete_dev_comp_param
#include <esp_ble_mesh_defs.h> ESP_BLE_MESH_PROVISIONER_DELETE_DEV_COMP_EVT.

Public Members

int **err_code**
Indicate the result of deleting device by the Provisioner

struct ble_mesh_provisioner_delete_node_with_addr_comp_param
#include <esp_ble_mesh_defs.h> ESP_BLE_MESH_PROVISIONER_DELETE_NODE_WITH_ADDR_CO

Public Members

int **err_code**
Indicate the result of deleting node with unicast address by the Provisioner

uint16_t **unicast_addr**
Node unicast address

struct ble_mesh_provisioner_delete_node_with_uuid_comp_param
#include <esp_ble_mesh_defs.h> ESP_BLE_MESH_PROVISIONER_DELETE_NODE_WITH_UUID_CO

Public Members

int **err_code**
Indicate the result of deleting node with uuid by the Provisioner

uint8_t **uuid**[16]
Node device uuid

struct ble_mesh_provisioner_link_close_evt_param
#include <esp_ble_mesh_defs.h> ESP_BLE_MESH_PROVISIONER_PROV_LINK_CLOSE_EVT.

Public Members

esp_ble_mesh_prov_bearer_t **bearer**

Type of the bearer used when Provisioner link is closed

uint8_t **reason**

Reason of the closed provisioning link

struct ble_mesh_provisioner_link_open_evt_param

#include <esp_ble_mesh_defs.h> ESP_BLE_MESH_PROVISIONER_PROV_LINK_OPEN_EVT.

Public Members

esp_ble_mesh_prov_bearer_t **bearer**

Type of the bearer used when Provisioner link is opened

struct ble_mesh_provisioner_prov_comp_param

#include <esp_ble_mesh_defs.h> ESP_BLE_MESH_PROVISIONER_PROV_COMPLETE_EVT.

Public Members

uint16_t **node_idx**

Index of the provisioned device

esp_ble_mesh_octet16_t **device_uuid**

Device UUID of the provisioned device

uint16_t **unicast_addr**

Primary address of the provisioned device

uint8_t **element_num**

Element count of the provisioned device

uint16_t **netkey_idx**

NetKey Index of the provisioned device

struct ble_mesh_provisioner_prov_dev_with_addr_comp_param

#include <esp_ble_mesh_defs.h> ESP_BLE_MESH_PROVISIONER_PROV_DEV_WITH_ADDR_COMP

Public Members

int **err_code**

Indicate the result of Provisioner starting to provision a device

struct ble_mesh_provisioner_prov_disable_comp_param

#include <esp_ble_mesh_defs.h> ESP_BLE_MESH_PROVISIONER_PROV_DISABLE_COMP_EVT.

Public Members

int **err_code**

Indicate the result of disabling BLE Mesh Provisioner

struct ble_mesh_provisioner_prov_enable_comp_param

#include <esp_ble_mesh_defs.h> ESP_BLE_MESH_PROVISIONER_PROV_ENABLE_COMP_EVT.

Public Members

int **err_code**

Indicate the result of enabling BLE Mesh Provisioner

struct ble_mesh_provisioner_prov_input_evt_param

#include <esp_ble_mesh_defs.h> ESP_BLE_MESH_PROVISIONER_PROV_INPUT_EVT.

Public Members

esp_ble_mesh_oob_method_t **method**

Method of device Output OOB Authentication

esp_ble_mesh_output_action_t **action**

Action of device Output OOB Authentication

uint8_t **size**

Size of device Output OOB Authentication

uint8_t **link_idx**

Index of the provisioning link

struct ble_mesh_provisioner_prov_input_num_comp_param

#include <esp_ble_mesh_defs.h> ESP_BLE_MESH_PROVISIONER_PROV_INPUT_NUMBER_COMP_E

Public Members

int **err_code**

Indicate the result of inputting number by the Provisioner

struct ble_mesh_provisioner_prov_input_str_comp_param

#include <esp_ble_mesh_defs.h> ESP_BLE_MESH_PROVISIONER_PROV_INPUT_STRING_COMP_EV

Public Members

int **err_code**

Indicate the result of inputting string by the Provisioner

struct ble_mesh_provisioner_prov_output_evt_param

#include <esp_ble_mesh_defs.h> ESP_BLE_MESH_PROVISIONER_PROV_OUTPUT_EVT.

Public Members

esp_ble_mesh_oob_method_t **method**

Method of device Input OOB Authentication

esp_ble_mesh_input_action_t **action**

Action of device Input OOB Authentication

uint8_t **size**

Size of device Input OOB Authentication

uint8_t **link_idx**

Index of the provisioning link

char **string**[8]

String output by the Provisioner

uint32_t **number**

Number output by the Provisioner

union *esp_ble_mesh_prov_cb_param_t*::*ble_mesh_provisioner_prov_output_evt_param*::[**anonymous**] [**anon**

struct ble_mesh_provisioner_prov_read_oob_pub_key_comp_param

#include <esp_ble_mesh_defs.h> ESP_BLE_MESH_PROVISIONER_PROV_READ_OOB_PUB_KEY_C

Public Members

int **err_code**

Indicate the result of setting OOB Public Key by the Provisioner

struct ble_mesh_provisioner_prov_read_oob_pub_key_evt_param

#include <esp_ble_mesh_defs.h> ESP_BLE_MESH_PROVISIONER_PROV_READ_OOB_PUB_KEY_E

Public Members

uint8_t **link_idx**

Index of the provisioning link

struct ble_mesh_provisioner_recv_unprov_adv_pkt_param

#include <esp_ble_mesh_defs.h> ESP_BLE_MESH_PROVISIONER_RECV_UNPROV_ADV_PKT_EVT.

Public Members

uint8_t **dev_uuid**[16]

Device UUID of the unprovisioned device

esp_ble_mesh_bd_addr_t **addr**

Device address of the unprovisioned device

esp_ble_mesh_addr_type_t **addr_type**

Device address type

uint16_t **oob_info**

OOB Info of the unprovisioned device

uint8_t **adv_type**

Avertising type of the unprovisioned device

esp_ble_mesh_prov_bearer_t **bearer**

Bearer of the unprovisioned device

int8_t **rssi**

RSSI of the received advertising packet

struct ble_mesh_provisioner_set_dev_uuid_match_comp_param

#include <esp_ble_mesh_defs.h> ESP_BLE_MESH_PROVISIONER_SET_DEV_UUID_MATCH_COMP_

Public Members

int **err_code**

Indicate the result of setting Device UUID match value by the Provisioner

struct ble_mesh_provisioner_set_node_name_comp_param

#include <esp_ble_mesh_defs.h> ESP_BLE_MESH_PROVISIONER_SET_NODE_NAME_COMP_EVT.

Public Members

int **err_code**

Indicate the result of setting provisioned device name by the Provisioner

uint16_t **node_index**

Index of the provisioned device

struct ble_mesh_provisioner_set_primary_elem_addr_comp_param

#include <esp_ble_mesh_defs.h> ESP_BLE_MESH_PROVISIONER_SET_PRIMARY_ELEM_ADDR_CO

Public Members

int **err_code**

Indicate the result of setting unicast address of primary element by the Provisioner

struct ble_mesh_provisioner_set_prov_data_info_comp_param

#include <esp_ble_mesh_defs.h> ESP_BLE_MESH_PROVISIONER_SET_PROV_DATA_INFO_COMP_

Public Members

int **err_code**

Indicate the result of setting provisioning info by the Provisioner

struct ble_mesh_provisioner_set_static_oob_val_comp_param

#include <esp_ble_mesh_defs.h> ESP_BLE_MESH_PROVISIONER_SET_STATIC_OOB_VALUE_COMP

Public Members

int **err_code**

Indicate the result of setting static oob value by the Provisioner

struct ble_mesh_provisioner_store_node_comp_data_comp_param

#include <esp_ble_mesh_defs.h> ESP_BLE_MESH_PROVISIONER_STORE_NODE_COMP_DATA_CO

Public Members

int **err_code**

Indicate the result of storing node composition data by the Provisioner

uint16_t **addr**

Node element address

struct ble_mesh_provisioner_update_local_app_key_comp_param

#include <esp_ble_mesh_defs.h> ESP_BLE_MESH_PROVISIONER_UPDATE_LOCAL_APP_KEY_CO

Public Members

int **err_code**

Indicate the result of updating local AppKey by the Provisioner

uint16_t **net_idx**

NetKey Index

uint16_t **app_idx**

AppKey Index

struct ble_mesh_provisioner_update_local_net_key_comp_param

#include <esp_ble_mesh_defs.h> ESP_BLE_MESH_PROVISIONER_UPDATE_LOCAL_NET_KEY_COM

Public Members

int **err_code**

Indicate the result of updating local NetKey by the Provisioner

uint16_t **net_idx**

NetKey Index

struct ble_mesh_proxy_client_add_filter_addr_comp_param

#include <esp_ble_mesh_defs.h> ESP_BLE_MESH_PROXY_CLIENT_ADD_FILTER_ADDR_COMP_EV

Public Members

int **err_code**

Indicate the result of Proxy Client add filter address

uint8_t **conn_handle**

Proxy connection handle

uint16_t **net_idx**

Corresponding NetKey Index

struct ble_mesh_proxy_client_connect_comp_param

#include <esp_ble_mesh_defs.h> ESP_BLE_MESH_PROXY_CLIENT_CONNECT_COMP_EVT.

Public Members

int **err_code**

Indicate the result of Proxy Client connect

esp_ble_mesh_bd_addr_t **addr**

Device address of the Proxy Server

esp_ble_mesh_addr_type_t **addr_type**

Device address type

uint16_t **net_idx**

Corresponding NetKey Index

struct ble_mesh_proxy_client_connected_param

#include <esp_ble_mesh_defs.h> ESP_BLE_MESH_PROXY_CLIENT_CONNECTED_EVT.

Public Members

esp_ble_mesh_bd_addr_t **addr**
Device address of the Proxy Server

esp_ble_mesh_addr_type_t **addr_type**
Device address type

uint8_t **conn_handle**
Proxy connection handle

uint16_t **net_idx**
Corresponding NetKey Index

struct ble_mesh_proxy_client_disconnect_comp_param
#include <esp_ble_mesh_defs.h> ESP_BLE_MESH_PROXY_CLIENT_DISCONNECT_COMP_EVT.

Public Members

int **err_code**
Indicate the result of Proxy Client disconnect

uint8_t **conn_handle**
Proxy connection handle

struct ble_mesh_proxy_client_disconnected_param
#include <esp_ble_mesh_defs.h> ESP_BLE_MESH_PROXY_CLIENT_DISCONNECTED_EVT.

Public Members

esp_ble_mesh_bd_addr_t **addr**
Device address of the Proxy Server

esp_ble_mesh_addr_type_t **addr_type**
Device address type

uint8_t **conn_handle**
Proxy connection handle

uint16_t **net_idx**
Corresponding NetKey Index

uint8_t **reason**
Proxy disconnect reason

struct ble_mesh_proxy_client_recv_adv_pkt_param
#include <esp_ble_mesh_defs.h> ESP_BLE_MESH_PROXY_CLIENT_RECV_ADV_PKT_EVT.

Public Members

esp_ble_mesh_bd_addr_t **addr**

Device address

esp_ble_mesh_addr_type_t **addr_type**

Device address type

uint16_t **net_idx**

Network ID related NetKey Index

uint8_t **net_id**[8]

Network ID contained in the advertising packet

int8_t **rssi**

RSSI of the received advertising packet

struct ble_mesh_proxy_client_recv_filter_status_param

#include <esp_ble_mesh_defs.h> ESP_BLE_MESH_PROXY_CLIENT_RECV_FILTER_STATUS_EVT.

Public Members

uint8_t **conn_handle**

Proxy connection handle

uint16_t **server_addr**

Proxy Server primary element address

uint16_t **net_idx**

Corresponding NetKey Index

uint8_t **filter_type**

Proxy Server filter type(whitelist or blacklist)

uint16_t **list_size**

Number of addresses in the Proxy Server filter list

struct ble_mesh_proxy_client_remove_filter_addr_comp_param

#include <esp_ble_mesh_defs.h> ESP_BLE_MESH_PROXY_CLIENT_REMOVE_FILTER_ADDR_COM

Public Members

int **err_code**

Indicate the result of Proxy Client remove filter address

uint8_t **conn_handle**

Proxy connection handle

uint16_t **net_idx**

Corresponding NetKey Index

struct ble_mesh_proxy_client_set_filter_type_comp_param

#include <esp_ble_mesh_defs.h> ESP_BLE_MESH_PROXY_CLIENT_SET_FILTER_TYPE_COMP_EV

Public Members

int **err_code**

Indicate the result of Proxy Client set filter type

uint8_t **conn_handle**

Proxy connection handle

uint16_t **net_idx**

Corresponding NetKey Index

struct ble_mesh_proxy_gatt_disable_comp_param

#include <esp_ble_mesh_defs.h> ESP_BLE_MESH_NODE_PROXY_GATT_DISABLE_COMP_EVT.

Public Members

int **err_code**

Indicate the result of disabling Mesh Proxy Service

struct ble_mesh_proxy_gatt_enable_comp_param

#include <esp_ble_mesh_defs.h> ESP_BLE_MESH_NODE_PROXY_GATT_ENABLE_COMP_EVT.

Public Members

int **err_code**

Indicate the result of enabling Mesh Proxy Service

struct ble_mesh_proxy_identity_enable_comp_param

#include <esp_ble_mesh_defs.h> ESP_BLE_MESH_NODE_PROXY_IDENTITY_ENABLE_COMP_EVT

Public Members

int **err_code**

Indicate the result of enabling Mesh Proxy advertising

struct ble_mesh_set_fast_prov_action_comp_param

#include <esp_ble_mesh_defs.h> ESP_BLE_MESH_SET_FAST_PROV_ACTION_COMP_EVT.

Public Members

uint8_t **status_action**

Indicate the result of setting action of fast provisioning

struct ble_mesh_set_fast_prov_info_comp_param

#include <esp_ble_mesh_defs.h> ESP_BLE_MESH_SET_FAST_PROV_INFO_COMP_EVT.

Public Members

uint8_t **status_unicast**

Indicate the result of setting unicast address range of fast provisioning

uint8_t **status_net_idx**

Indicate the result of setting NetKey Index of fast provisioning

uint8_t **status_match**

Indicate the result of setting matching Device UUID of fast provisioning

struct ble_mesh_set_oob_pub_key_comp_param

#include <esp_ble_mesh_defs.h> ESP_BLE_MESH_NODE_PROV_SET_OOB_PUB_KEY_COMP_EVT

Public Members

int **err_code**

Indicate the result of setting OOB Public Key

struct ble_mesh_set_unprov_dev_name_comp_param

#include <esp_ble_mesh_defs.h> ESP_BLE_MESH_NODE_SET_UNPROV_DEV_NAME_COMP_EVT.

Public Members

int **err_code**

Indicate the result of setting BLE Mesh device name

struct ble_mesh_start_ble_advertising_comp_param

#include <esp_ble_mesh_defs.h> ESP_BLE_MESH_START_BLE_ADVERTISING_COMP_EVT.

Public Members

int **err_code**

Indicate the result of starting BLE advertising

uint8_t **index**

Index of the BLE advertising

struct ble_mesh_stop_ble_advertising_comp_param

#include <esp_ble_mesh_defs.h> ESP_BLE_MESH_STOP_BLE_ADVERTISING_COMP_EVT.

Public Members

int **err_code**

Indicate the result of stopping BLE advertising

uint8_t **index**

Index of the BLE advertising

union esp_ble_mesh_server_state_value_t

#include <esp_ble_mesh_defs.h> Server model state value union.

Public Members

uint8_t **onoff**

The value of the Generic OnOff state

The value of the Light LC Light OnOff state

struct *esp_ble_mesh_server_state_value_t*::[**anonymous**] **gen_onoff**

The Generic OnOff state

int16_t **level**

The value of the Generic Level state

struct *esp_ble_mesh_server_state_value_t*::[**anonymous**] **gen_level**

The Generic Level state

uint8_t **onpowerup**

The value of the Generic OnPowerUp state

struct *esp_ble_mesh_server_state_value_t*::[**anonymous**] **gen_onpowerup**

The Generic OnPowerUp state

uint16_t **power**

The value of the Generic Power Actual state

struct *esp_ble_mesh_server_state_value_t*::[**anonymous**] **gen_power_actual**

The Generic Power Actual state

uint16_t **lightness**

The value of the Light Lightness Actual state

The value of the Light Lightness Linear state

The value of the Light CTL Lightness state

The value of the Light HSL Lightness state

The value of the Light xyL Lightness state

struct *esp_ble_mesh_server_state_value_t*::[**anonymous**] **light_lightness_actual**

The Light Lightness Actual state

struct *esp_ble_mesh_server_state_value_t*::[**anonymous**] **light_lightness_linear**

The Light Lightness Linear state

struct *esp_ble_mesh_server_state_value_t*::[**anonymous**] **light_ctl_lightness**

The Light CTL Lightness state

uint16_t **temperature**

The value of the Light CTL Temperature state

int16_t **delta_uv**

The value of the Light CTL Delta UV state

struct *esp_ble_mesh_server_state_value_t*::[**anonymous**] **light_ctl_temp_delta_uv**

The Light CTL Temperature & Delta UV states

struct *esp_ble_mesh_server_state_value_t*::[**anonymous**] **light_hsl_lightness**

The Light HSL Lightness state

uint16_t **hue**

The value of the Light HSL Hue state

struct *esp_ble_mesh_server_state_value_t*::[**anonymous**] **light_hsl_hue**

The Light HSL Hue state

uint16_t **saturation**

The value of the Light HSL Saturation state

struct *esp_ble_mesh_server_state_value_t*::[**anonymous**] **light_hsl_saturation**

The Light HSL Saturation state

struct *esp_ble_mesh_server_state_value_t*::[**anonymous**] **light_xyl_lightness**

The Light xyL Lightness state

struct *esp_ble_mesh_server_state_value_t*::[**anonymous**] **light_lc_light_onoff**

The Light LC Light OnOff state

union esp_ble_mesh_model_cb_param_t

#include <esp_ble_mesh_defs.h> BLE Mesh model callback parameters union.

Public Members

struct *esp_ble_mesh_model_cb_param_t*::*ble_mesh_model_operation_evt_param* **model_operation**

Event parameter of ESP_BLE_MESH_MODEL_OPERATION_EVT

struct *esp_ble_mesh_model_cb_param_t*::*ble_mesh_model_send_comp_param* **model_send_comp**

Event parameter of ESP_BLE_MESH_MODEL_SEND_COMP_EVT

struct *esp_ble_mesh_model_cb_param_t*::*ble_mesh_model_publish_comp_param* **model_publish_comp**
Event parameter of ESP_BLE_MESH_MODEL_PUBLISH_COMP_EVT

struct *esp_ble_mesh_model_cb_param_t*::*ble_mesh_mod_recv_publish_msg_param* **client_recv_publish_msg**
Event parameter of ESP_BLE_MESH_CLIENT_MODEL_RECV_PUBLISH_MSG_EVT

struct *esp_ble_mesh_model_cb_param_t*::*ble_mesh_client_model_send_timeout_param* **client_send_timeout**
Event parameter of ESP_BLE_MESH_CLIENT_MODEL_SEND_TIMEOUT_EVT

struct *esp_ble_mesh_model_cb_param_t*::*ble_mesh_model_publish_update_evt_param* **model_publish_update**
Event parameter of ESP_BLE_MESH_MODEL_PUBLISH_UPDATE_EVT

struct *esp_ble_mesh_model_cb_param_t*::*ble_mesh_server_model_update_state_comp_param* **server_model_upd**
Event parameter of ESP_BLE_MESH_SERVER_MODEL_UPDATE_STATE_COMP_EVT

struct ble_mesh_client_model_send_timeout_param
#include <esp_ble_mesh_defs.h> ESP_BLE_MESH_CLIENT_MODEL_SEND_TIMEOUT_EVT.

Public Members

uint32_t **opcode**
Opcode of the previously sent message

esp_ble_mesh_model_t ***model**
Pointer to the model which sends the previous message

esp_ble_mesh_msg_ctx_t ***ctx**
Pointer to the context of the previous message

struct ble_mesh_mod_recv_publish_msg_param
#include <esp_ble_mesh_defs.h> ESP_BLE_MESH_CLIENT_MODEL_RECV_PUBLISH_MSG_EVT.

Public Members

uint32_t **opcode**
Opcode of the unsolicited received message

esp_ble_mesh_model_t ***model**
Pointer to the model which receives the message

esp_ble_mesh_msg_ctx_t ***ctx**
Pointer to the context of the message

uint16_t **length**
Length of the received message

uint8_t ***msg**
Value of the received message

struct ble_mesh_model_operation_evt_param

#include <esp_ble_mesh_defs.h> ESP_BLE_MESH_MODEL_OPERATION_EVT.

Public Members

uint32_t **opcode**

Opcode of the received message

esp_ble_mesh_model_t ***model**

Pointer to the model which receives the message

esp_ble_mesh_msg_ctx_t ***ctx**

Pointer to the context of the received message

uint16_t **length**

Length of the received message

uint8_t ***msg**

Value of the received message

struct ble_mesh_model_publish_comp_param

#include <esp_ble_mesh_defs.h> ESP_BLE_MESH_MODEL_PUBLISH_COMP_EVT.

Public Members

int **err_code**

Indicate the result of publishing a message

esp_ble_mesh_model_t ***model**

Pointer to the model which publishes the message

struct ble_mesh_model_publish_update_evt_param

#include <esp_ble_mesh_defs.h> ESP_BLE_MESH_MODEL_PUBLISH_UPDATE_EVT.

Public Members

esp_ble_mesh_model_t ***model**

Pointer to the model which is going to update its publish message

struct ble_mesh_model_send_comp_param

#include <esp_ble_mesh_defs.h> ESP_BLE_MESH_MODEL_SEND_COMP_EVT.

Public Members

int **err_code**

Indicate the result of sending a message

uint32_t **opcode**

Opcode of the message

esp_ble_mesh_model_t ***model**

Pointer to the model which sends the message

esp_ble_mesh_msg_ctx_t ***ctx**

Context of the message

struct ble_mesh_server_model_update_state_comp_param

#include <esp_ble_mesh_defs.h> ESP_BLE_MESH_SERVER_MODEL_UPDATE_STATE_COMP_EVT.

Public Members

int **err_code**

Indicate the result of updating server model state

esp_ble_mesh_model_t ***model**

Pointer to the server model which state value is updated

esp_ble_mesh_server_state_type_t **type**

Type of the updated server state

Structures

struct esp_ble_mesh_deinit_param_t

BLE Mesh deinit parameters

Public Members

bool **erase_flash**

Indicate if erasing flash when deinit mesh stack

struct esp_ble_mesh_elem_t

Abstraction that describes a BLE Mesh Element. This structure is associated with struct bt_mesh_elem in mesh_access.h

Public Members

uint16_t **element_addr**

Element Address, assigned during provisioning.

const uint16_t **location**

Location Descriptor (GATT Bluetooth Namespace Descriptors)

const uint8_t **sig_model_count**

SIG Model count

const uint8_t **vnd_model_count**

Vendor Model count

esp_ble_mesh_model_t ***sig_models**

SIG Models

esp_ble_mesh_model_t ***vnd_models**

Vendor Models

struct esp_ble_mesh_model_pub_t

Abstraction that describes a model publication context. This structure is associated with struct bt_mesh_model_pub in mesh_access.h

Public Members

esp_ble_mesh_model_t ***model**

Pointer to the model to which the context belongs. Initialized by the stack.

uint16_t **publish_addr**

Publish Address.

uint16_t **app_idx**

Publish AppKey Index.

uint16_t **cred**

Friendship Credentials Flag.

uint16_t **send_rel**

Force reliable sending (segment acks)

uint8_t **ttl**

Publish Time to Live.

uint8_t **retransmit**

Retransmit Count & Interval Steps.

uint8_t **period**

Publish Period.

uint8_t **period_div**

Divisor for the Period.

uint8_t **fast_period**

Use FastPeriodDivisor

uint8_t **count**

Retransmissions left.

uint32_t **period_start**

Start of the current period.

struct net_buf_simple ***msg**

Publication buffer, containing the publication message.

This will get correctly created when the publication context has been defined using the ESP_BLE_MESH_MODEL_PUB_DEFINE macro.

ESP_BLE_MESH_MODEL_PUB_DEFINE(name, size);

esp_ble_mesh_cb_t **update**

Callback used to update publish message. Initialized by the stack.

struct k_delayed_work **timer**

Publish Period Timer. Initialized by the stack.

uint8_t **dev_role**

Role of the device that is going to publish messages

struct esp_ble_mesh_model_op_t

Abstraction that describes a model operation context. This structure is associated with struct bt_mesh_model_op in mesh_access.h

Public Members

const uint32_t **opcode**

Message opcode

const size_t **min_len**

Message minimum length

esp_ble_mesh_cb_t **param_cb**

Callback used to handle message. Initialized by the stack.

struct esp_ble_mesh_model_cbs_t

Abstraction that describes a model callback structure. This structure is associated with struct bt_mesh_model_cb in mesh_access.h.

Public Members

esp_ble_mesh_cb_t **init_cb**

Callback used during model initialization. Initialized by the stack.

struct esp_ble_mesh_model

Abstraction that describes a Mesh Model instance. This structure is associated with struct bt_mesh_model in mesh_access.h

Public Members

union *esp_ble_mesh_model*::[**anonymous**] [**anonymous**]

Model ID

uint8_t **element_idx**

Internal information, mainly for persistent storage Belongs to Nth element

uint8_t **model_idx**

Is the Nth model in the element

uint16_t **flags**

Information about what has changed

esp_ble_mesh_elem_t ***element**

The Element to which this Model belongs

esp_ble_mesh_model_pub_t ***const pub**

Model Publication

uint16_t **keys**[CONFIG_BLE_MESH_MODEL_KEY_COUNT]

AppKey List

uint16_t **groups**[CONFIG_BLE_MESH_MODEL_GROUP_COUNT]

Subscription List (group or virtual addresses)

esp_ble_mesh_model_op_t ***op**

Model operation context

esp_ble_mesh_model_cbs_t ***cb**

Model callback structure

void ***user_data**

Model-specific user data

struct esp_ble_mesh_msg_ctx_t

Message sending context. This structure is associated with struct bt_mesh_msg_ctx in mesh_access.h

Public Members

uint16_t **net_idx**

NetKey Index of the subnet through which to send the message.

uint16_t **app_idx**

AppKey Index for message encryption.

uint16_t **addr**

Remote address.

uint16_t **recv_dst**

Destination address of a received message. Not used for sending.

int8_t **recv_rssi**

RSSI of received packet. Not used for sending.

uint8_t **recv_ttl**

Received TTL value. Not used for sending.

uint8_t **send_rel**

Force sending reliably by using segment acknowledgement

uint8_t **send_ttl**

TTL, or ESP_BLE_MESH_TTL_DEFAULT for default TTL.

uint32_t **recv_op**

Opcode of a received message. Not used for sending message.

esp_ble_mesh_model_t ***model**

Model corresponding to the message, no need to be initialized before sending message

bool **srv_send**

Indicate if the message is sent by a node server model, no need to be initialized before sending message

struct esp_ble_mesh_prov_t

Provisioning properties & capabilities. This structure is associated with struct bt_mesh_prov in mesh_access.h

struct esp_ble_mesh_comp_t

Node Composition data context. This structure is associated with struct bt_mesh_comp in mesh_access.h

Public Members

uint16_t **cid**

16-bit SIG-assigned company identifier

uint16_t **pid**

16-bit vendor-assigned product identifier

uint16_t **vid**

16-bit vendor-assigned product version identifier

size_t **element_count**

Element count

esp_ble_mesh_elem_t ***elements**

A sequence of elements

struct esp_ble_mesh_unprov_dev_add_t

Information of the device which is going to be added for provisioning.

Public Members

esp_ble_mesh_bd_addr_t **addr**

Device address

esp_ble_mesh_addr_type_t **addr_type**

Device address type

uint8_t **uuid**[16]

Device UUID

uint16_t **oob_info**

Device OOB Info ADD_DEV_START_PROV_NOW_FLAG shall not be set if the bearer has both PB-ADV and PB-GATT enabled

esp_ble_mesh_prov_bearer_t **bearer**

Provisioning Bearer

struct esp_ble_mesh_device_delete_t

Information of the device which is going to be deleted.

Public Members

esp_ble_mesh_bd_addr_t **addr**

Device address

esp_ble_mesh_addr_type_t **addr_type**

Device address type

uint8_t **uuid**[16]

Device UUID

uint8_t **flag**

BIT0: device address; BIT1: device UUID

struct esp_ble_mesh_prov_data_info_t

Information of the provisioner which is going to be updated.

Public Members

uint16_t **net_idx**

NetKey Index

uint8_t **flags**

Flags

uint32_t **iv_index**

IV Index

uint8_t **flag**

BIT0: net_idx; BIT1: flags; BIT2: iv_index

struct esp_ble_mesh_node_t

Information of the provisioned node

Public Members

esp_ble_mesh_bd_addr_t **addr**

Node device address

esp_ble_mesh_addr_type_t **addr_type**

Node device address type

uint8_t **dev_uuid**[16]

Device UUID

uint16_t **oob_info**

Node OOB information

uint16_t **unicast_addr**

Node unicast address

uint8_t **element_num**

Node element number

uint16_t **net_idx**

Node NetKey Index

uint8_t **flags**

Node key refresh flag and iv update flag

uint32_t **iv_index**

Node IV Index

uint8_t **dev_key**[16]

Node device key

char **name**[**ESP_BLE_MESH_NODE_NAME_MAX_LEN** + 1]

Node name

uint16_t **comp_length**

Length of Composition Data

uint8_t ***comp_data**

Value of Composition Data

struct esp_ble_mesh_fast_prov_info_t

Context of fast provisioning which need to be set.

Public Members

uint16_t **unicast_min**

Minimum unicast address used for fast provisioning

uint16_t **unicast_max**

Maximum unicast address used for fast provisioning

uint16_t **net_idx**

Netkey index used for fast provisioning

uint8_t **flags**

Flags used for fast provisioning

uint32_t **iv_index**

IV Index used for fast provisioning

uint8_t **offset**

Offset of the UUID to be compared

uint8_t **match_len**

Length of the UUID to be compared

uint8_t **match_val**[16]

Value of UUID to be compared

struct esp_ble_mesh_ble_adv_param_t

Context of BLE advertising parameters.

Public Members

uint16_t **interval**

BLE advertising interval

uint8_t **adv_type**

BLE advertising type

uint8_t **own_addr_type**

Own address type

uint8_t **peer_addr_type**

Peer address type

uint8_t **peer_addr**[BD_ADDR_LEN]

Peer address

uint16_t **duration**

Duration is milliseconds

uint16_t **period**

Period in milliseconds

uint16_t **count**

Number of advertising duration

uint8_t **priority**

Priority of BLE advertising packet

struct esp_ble_mesh_ble_adv_data_t

Context of BLE advertising data.

Public Members

uint8_t **adv_data_len**

Advertising data length

uint8_t **adv_data**[31]

Advertising data

uint8_t **scan_rsp_data_len**

Scan response data length

uint8_t **scan_rsp_data**[31]

Scan response data

struct esp_ble_mesh_heartbeat_filter_info_t

Context of Provisioner heartbeat filter information to be set

Public Members

uint16_t **hb_src**

Heartbeat source address (unicast address)

uint16_t **hb_dst**

Heartbeat destination address (unicast address or group address)

struct esp_ble_mesh_client_op_pair_t

BLE Mesh client models related definitions.

Client model Get/Set message opcode and corresponding Status message opcode

Public Members

uint32_t **cli_op**

The client message opcode

uint32_t **status_op**

The server status opcode corresponding to the client message opcode

struct esp_ble_mesh_client_t

Client Model user data context.

Public Members

esp_ble_mesh_model_t ***model**

Pointer to the client model. Initialized by the stack.

int **op_pair_size**

Size of the op_pair

const *esp_ble_mesh_client_op_pair_t* ***op_pair**

Table containing get/set message opcode and corresponding status message opcode

uint32_t **publish_status**

Callback used to handle the received unsolicited message. Initialized by the stack.

void ***internal_data**

Pointer to the internal data of client model

uint8_t **msg_role**

Role of the device (Node/Provisioner) that is going to send messages

struct esp_ble_mesh_client_common_param_t

Common parameters of the messages sent by Client Model.

Public Members

esp_ble_mesh_opcode_t **opcode**

Message opcode

esp_ble_mesh_model_t ***model**

Pointer to the client model structure

esp_ble_mesh_msg_ctx_t **ctx**

The context used to send message

int32_t **msg_timeout**

Timeout value (ms) to get response to the sent message Note: if using default timeout value in menuconfig, make sure to set this value to 0

uint8_t **msg_role**

Role of the device - Node/Provisioner

struct esp_ble_mesh_state_transition_t

Parameters of the server model state transition

Public Functions

BLE_MESH_ATOMIC_DEFINE(flag, *ESP_BLE_MESH_SERVER_FLAG_MAX*)

Flag used to indicate if the transition timer has been started internally.

If the model which contains *esp_ble_mesh_state_transition_t* sets "set_auto_rsp" to ESP_BLE_MESH_SERVER_RSP_BY_APP, the handler of the timer shall be initialized by the users.

And users can use this flag to indicate whether the timer is started or not.

Public Members

bool **just_started**

Indicate if the state transition has just started

uint8_t **trans_time**

State transition time

uint8_t **remain_time**

Remaining time of state transition

uint8_t **delay**

Delay before starting state transition

uint32_t **quo_tt**

Duration of each divided transition step

uint32_t **counter**

Number of steps which the transition duration is divided

uint32_t **total_duration**

State transition total duration

int64_t **start_timestamp**

Time when the state transition is started

struct k_delayed_work **timer**

Timer used for state transition

struct esp_ble_mesh_last_msg_info_t

Parameters of the server model received last same set message.

Public Members

uint8_t **tid**

Transaction number of the last message

uint16_t **src**

Source address of the last message

uint16_t **dst**

Destination address of the last message

int64_t **timestamp**

Time when the last message is received

struct esp_ble_mesh_server_rsp_ctrl_t

Parameters of the Server Model response control

Public Members

uint8_t **get_auto_rsp**

BLE Mesh Server Response Option.

1. If get_auto_rsp is set to ESP_BLE_MESH_SERVER_RSP_BY_APP, then the response of Client Get messages need to be replied by the application;
2. If get_auto_rsp is set to ESP_BLE_MESH_SERVER_AUTO_RSP, then the response of Client Get messages will be replied by the server models;
3. If set_auto_rsp is set to ESP_BLE_MESH_SERVER_RSP_BY_APP, then the response of Client Set messages need to be replied by the application;
4. If set_auto_rsp is set to ESP_BLE_MESH_SERVER_AUTO_RSP, then the response of Client Set messages will be replied by the server models;
5. If status_auto_rsp is set to ESP_BLE_MESH_SERVER_RSP_BY_APP, then the response of Server Status messages need to be replied by the application;
6. If status_auto_rsp is set to ESP_BLE_MESH_SERVER_AUTO_RSP, then the response of Server Status messages will be replied by the server models;Response control for Client Get messages

uint8_t **set_auto_rsp**

Response control for Client Set messages

uint8_t **status_auto_rsp**

Response control for Server Status messages

Macros

ESP_BLE_HOST_STATUS_ENABLED

ESP_BLE_HOST_STATUS_CHECK(status)

The maximum length of a BLE Mesh message, including Opcode, Payload and TransMIC

ESP_BLE_MESH_SDU_MAX_LEN

Length of a short Mesh MIC.

ESP_BLE_MESH_MIC_SHORT

Length of a long Mesh MIC.

ESP_BLE_MESH_MIC_LONG

The maximum length of a BLE Mesh provisioned node name

ESP_BLE_MESH_NODE_NAME_MAX_LEN

The maximum length of a BLE Mesh unprovisioned device name

ESP_BLE_MESH_DEVICE_NAME_MAX_LEN

The maximum length of settings user id

ESP_BLE_MESH_SETTINGS_UID_SIZE

Invalid settings index

ESP_BLE_MESH_INVALID_SETTINGS_IDX

Define the BLE Mesh octet 16 bytes size

ESP_BLE_MESH_OCTET16_LEN

ESP_BLE_MESH_OCTET8_LEN

ESP_BLE_MESH_CID_NVAL

Special TTL value to request using configured default TTL

ESP_BLE_MESH_TTL_DEFAULT

Maximum allowed TTL value

ESP_BLE_MESH_TTL_MAX

ESP_BLE_MESH_ADDR_UNASSIGNED

ESP_BLE_MESH_ADDR_ALL_NODES

ESP_BLE_MESH_ADDR_PROXIES

ESP_BLE_MESH_ADDR_FRIENDS

ESP_BLE_MESH_ADDR_RELAYS

ESP_BLE_MESH_KEY_UNUSED

ESP_BLE_MESH_KEY_DEV

ESP_BLE_MESH_KEY_PRIMARY

ESP_BLE_MESH_KEY_ANY
Primary Network Key index

ESP_BLE_MESH_NET_PRIMARY
Relay state value

ESP_BLE_MESH_RELAY_DISABLED

ESP_BLE_MESH_RELAY_ENABLED

ESP_BLE_MESH_RELAY_NOT_SUPPORTED
Beacon state value

ESP_BLE_MESH_BEACON_DISABLED

ESP_BLE_MESH_BEACON_ENABLED
GATT Proxy state value

ESP_BLE_MESH_GATT_PROXY_DISABLED

ESP_BLE_MESH_GATT_PROXY_ENABLED

ESP_BLE_MESH_GATT_PROXY_NOT_SUPPORTED
Friend state value

ESP_BLE_MESH_FRIEND_DISABLED

ESP_BLE_MESH_FRIEND_ENABLED

ESP_BLE_MESH_FRIEND_NOT_SUPPORTED
Node identity state value

ESP_BLE_MESH_NODE_IDENTITY_STOPPED

ESP_BLE_MESH_NODE_IDENTITY_RUNNING

ESP_BLE_MESH_NODE_IDENTITY_NOT_SUPPORTED
Supported features

ESP_BLE_MESH_FEATURE_RELAY

ESP_BLE_MESH_FEATURE_PROXY

ESP_BLE_MESH_FEATURE_FRIEND

ESP_BLE_MESH_FEATURE_LOW_POWER

ESP_BLE_MESH_FEATURE_ALL_SUPPORTED

ESP_BLE_MESH_ADDR_IS_UNICAST(addr)

ESP_BLE_MESH_ADDR_IS_GROUP(addr)

ESP_BLE_MESH_ADDR_IS_VIRTUAL(addr)

ESP_BLE_MESH_ADDR_IS_RFU(addr)

ESP_BLE_MESH_INVALID_NODE_INDEX

ESP_BLE_MESH_TRANSMIT(count, int_ms)

Encode transmission count & interval steps.

Note For example, ESP_BLE_MESH_TRANSMIT(2, 20) means that the message will be sent about 90ms(count is 3, step is 1, interval is 30 ms which includes 10ms of advertising interval random delay).

Return BLE Mesh transmit value that can be used e.g. for the default values of the Configuration Model data.

Parameters

- `count`: Number of retransmissions (first transmission is excluded).
- `int_ms`: Interval steps in milliseconds. Must be greater than 0 and a multiple of 10.

ESP_BLE_MESH_GET_TRANSMIT_COUNT(transmit)

Decode transmit count from a transmit value.

Return Transmission count (actual transmissions equal to N + 1).

Parameters

- `transmit`: Encoded transmit count & interval value.

ESP_BLE_MESH_GET_TRANSMIT_INTERVAL(transmit)

Decode transmit interval from a transmit value.

Return Transmission interval in milliseconds.

Parameters

- `transmit`: Encoded transmit count & interval value.

ESP_BLE_MESH_PUBLISH_TRANSMIT(count, int_ms)

Encode Publish Retransmit count & interval steps.

Return BLE Mesh transmit value that can be used e.g. for the default values of the Configuration Model data.

Parameters

- `count`: Number of retransmissions (first transmission is excluded).
- `int_ms`: Interval steps in milliseconds. Must be greater than 0 and a multiple of 50.

ESP_BLE_MESH_GET_PUBLISH_TRANSMIT_COUNT(transmit)

Decode Publish Retransmit count from a given value.

Return Retransmission count (actual transmissions equal to N + 1).

Parameters

- `transmit`: Encoded Publish Retransmit count & interval value.

ESP_BLE_MESH_GET_PUBLISH_TRANSMIT_INTERVAL(transmit)

Decode Publish Retransmit interval from a given value.

Callbacks which are not needed to be initialized by users (set with 0 and will be initialized internally)

Return Transmission interval in milliseconds.

Parameters

- `transmit`: Encoded Publish Retransmit count & interval value.

ESP_BLE_MESH_PROV_STATIC_OOB_MAX_LEN

Maximum length of string used by Output OOB authentication

ESP_BLE_MESH_PROV_OUTPUT_OOB_MAX_LEN

Maximum length of string used by Output OOB authentication

ESP_BLE_MESH_PROV_INPUT_OOB_MAX_LEN

Macros used to define message opcode

ESP_BLE_MESH_MODEL_OP_1(b0)

ESP_BLE_MESH_MODEL_OP_2(b0, b1)

ESP_BLE_MESH_MODEL_OP_3(b0, cid)

This macro is associated with BLE_MESH_MODEL_CB in mesh_access.h

ESP_BLE_MESH_SIG_MODEL(_id, _op, _pub, _user_data)

This macro is associated with BLE_MESH_MODEL_VND_CB in mesh_access.h

ESP_BLE_MESH_VENDOR_MODEL(_company, _id, _op, _pub, _user_data)

ESP_BLE_MESH_ELEMENT(_loc, _mods, _vnd_mods)

Helper to define a BLE Mesh element within an array.

In case the element has no SIG or Vendor models, the helper macro ESP_BLE_MESH_MODEL_NONE can be given instead.

Note This macro is associated with BLE_MESH_ELEM in mesh_access.h

Parameters

- `_loc`: Location Descriptor.
- `_mods`: Array of SIG models.

- `_vnd_mods`: Array of vendor models.

`ESP_BLE_MESH_PROV`(uuid, sta_val, sta_val_len, out_size, out_act, in_size, in_act)

`BT_OCTET32_LEN`

`BD_ADDR_LEN`

`ESP_BLE_MESH_ADDR_TYPE_PUBLIC`

`ESP_BLE_MESH_ADDR_TYPE_RANDOM`

`ESP_BLE_MESH_ADDR_TYPE_RPA_PUBLIC`

`ESP_BLE_MESH_ADDR_TYPE_RPA_RANDOM`

`ESP_BLE_MESH_MODEL_PUB_DEFINE`(_name, _msg_len, _role)

Define a model publication context.

Parameters

- `_name`: Variable name given to the context.
- `_msg_len`: Length of the publication message.
- `_role`: Role of the device which contains the model.

`ESP_BLE_MESH_MODEL_OP`(_opcode, _min_len)

Define a model operation context.

Parameters

- `_opcode`: Message opcode.
- `_min_len`: Message minimum length.

`ESP_BLE_MESH_MODEL_OP_END`

Define the terminator for the model operation table. Each model operation struct array must use this terminator as the end tag of the operation unit.

`ESP_BLE_MESH_MODEL_NONE`

Helper to define an empty model array. This structure is associated with BLE_MESH_MODEL_NONE in mesh_access.h

`ADD_DEV_RM_AFTER_PROV_FLAG`

Device will be removed from queue after provisioned successfully

`ADD_DEV_START_PROV_NOW_FLAG`

Start provisioning device immediately

`ADD_DEV_FLUSHABLE_DEV_FLAG`

Device can be remove when queue is full and new device is going to added

DEL_DEV_ADDR_FLAG

DEL_DEV_UUID_FLAG

PROV_DATA_NET_IDX_FLAG

PROV_DATA_FLAGS_FLAG

PROV_DATA_IV_INDEX_FLAG

ESP_BLE_MESH_BLE_ADV_INFINITE

Count for sending BLE advertising packet infinitely This enum value is the priority of BLE advertising packet

ESP_BLE_MESH_HEARTBEAT_FILTER_ACCEPTLIST

ESP_BLE_MESH_HEARTBEAT_FILTER_REJECTLIST

Provisioner heartbeat filter operation

ESP_BLE_MESH_HEARTBEAT_FILTER_ADD

ESP_BLE_MESH_HEARTBEAT_FILTER_REMOVE

ESP_BLE_MESH_MODEL_ID_CONFIG_SRV

BLE Mesh models related Model ID and Opcode definitions.

< Foundation Models

ESP_BLE_MESH_MODEL_ID_CONFIG_CLI

ESP_BLE_MESH_MODEL_ID_HEALTH_SRV

ESP_BLE_MESH_MODEL_ID_HEALTH_CLI

Models from the Mesh Model Specification

ESP_BLE_MESH_MODEL_ID_GEN_ONOFF_SRV

ESP_BLE_MESH_MODEL_ID_GEN_ONOFF_CLI

ESP_BLE_MESH_MODEL_ID_GEN_LEVEL_SRV

ESP_BLE_MESH_MODEL_ID_GEN_LEVEL_CLI

ESP_BLE_MESH_MODEL_ID_GEN_DEF_TRANS_TIME_SRV

ESP_BLE_MESH_MODEL_ID_GEN_DEF_TRANS_TIME_CLI

ESP_BLE_MESH_MODEL_ID_GEN_POWER_ONOFF_SRV

ESP_BLE_MESH_MODEL_ID_GEN_POWER_ONOFF_SETUP_SRV

ESP_BLE_MESH_MODEL_ID_GEN_POWER_ONOFF_CLI

ESP_BLE_MESH_MODEL_ID_GEN_POWER_LEVEL_SRV

ESP_BLE_MESH_MODEL_ID_GEN_POWER_LEVEL_SETUP_SRV

ESP_BLE_MESH_MODEL_ID_GEN_POWER_LEVEL_CLI

ESP_BLE_MESH_MODEL_ID_GEN_BATTERY_SRV

ESP_BLE_MESH_MODEL_ID_GEN_BATTERY_CLI

ESP_BLE_MESH_MODEL_ID_GEN_LOCATION_SRV

ESP_BLE_MESH_MODEL_ID_GEN_LOCATION_SETUP_SRV

ESP_BLE_MESH_MODEL_ID_GEN_LOCATION_CLI

ESP_BLE_MESH_MODEL_ID_GEN_ADMIN_PROP_SRV

ESP_BLE_MESH_MODEL_ID_GEN_MANUFACTURER_PROP_SRV

ESP_BLE_MESH_MODEL_ID_GEN_USER_PROP_SRV

ESP_BLE_MESH_MODEL_ID_GEN_CLIENT_PROP_SRV

ESP_BLE_MESH_MODEL_ID_GEN_PROP_CLI

ESP_BLE_MESH_MODEL_ID_SENSOR_SRV

ESP_BLE_MESH_MODEL_ID_SENSOR_SETUP_SRV

ESP_BLE_MESH_MODEL_ID_SENSOR_CLI

ESP_BLE_MESH_MODEL_ID_TIME_SRV

ESP_BLE_MESH_MODEL_ID_TIME_SETUP_SRV

ESP_BLE_MESH_MODEL_ID_TIME_CLI

ESP_BLE_MESH_MODEL_ID_SCENE_SRV

ESP_BLE_MESH_MODEL_ID_SCENE_SETUP_SRV

ESP_BLE_MESH_MODEL_ID_SCENE_CLI

ESP_BLE_MESH_MODEL_ID_SCHEDULER_SRV

ESP_BLE_MESH_MODEL_ID_SCHEDULER_SETUP_SRV

ESP_BLE_MESH_MODEL_ID_SCHEDULER_CLI

ESP_BLE_MESH_MODEL_ID_LIGHT_LIGHTNESS_SRV

ESP_BLE_MESH_MODEL_ID_LIGHT_LIGHTNESS_SETUP_SRV

ESP_BLE_MESH_MODEL_ID_LIGHT_LIGHTNESS_CLI

ESP_BLE_MESH_MODEL_ID_LIGHT_CTL_SRV

ESP_BLE_MESH_MODEL_ID_LIGHT_CTL_SETUP_SRV

ESP_BLE_MESH_MODEL_ID_LIGHT_CTL_CLI

ESP_BLE_MESH_MODEL_ID_LIGHT_CTL_TEMP_SRV

ESP_BLE_MESH_MODEL_ID_LIGHT_HSL_SRV

ESP_BLE_MESH_MODEL_ID_LIGHT_HSL_SETUP_SRV

ESP_BLE_MESH_MODEL_ID_LIGHT_HSL_CLI

ESP_BLE_MESH_MODEL_ID_LIGHT_HSL_HUE_SRV

ESP_BLE_MESH_MODEL_ID_LIGHT_HSL_SAT_SRV

ESP_BLE_MESH_MODEL_ID_LIGHT_XYL_SRV

ESP_BLE_MESH_MODEL_ID_LIGHT_XYL_SETUP_SRV

ESP_BLE_MESH_MODEL_ID_LIGHT_XYL_CLI

ESP_BLE_MESH_MODEL_ID_LIGHT_LC_SRV

ESP_BLE_MESH_MODEL_ID_LIGHT_LC_SETUP_SRV

ESP_BLE_MESH_MODEL_ID_LIGHT_LC_CLI

ESP_BLE_MESH_MODEL_OP_BEACON_GET
: Config Beacon Get

ESP_BLE_MESH_MODEL_OP_COMPOSITION_DATA_GET
: Config Composition Data Get

ESP_BLE_MESH_MODEL_OP_DEFAULT_TTL_GET
: Config Default TTL Get

ESP_BLE_MESH_MODEL_OP_GATT_PROXY_GET
: Config GATT Proxy Get

ESP_BLE_MESH_MODEL_OP_RELAY_GET
: Config Relay Get

ESP_BLE_MESH_MODEL_OP_MODEL_PUB_GET
: Config Model Publication Get

ESP_BLE_MESH_MODEL_OP_FRIEND_GET
: Config Friend Get

ESP_BLE_MESH_MODEL_OP_HEARTBEAT_PUB_GET
: Config Heartbeat Publication Get

ESP_BLE_MESH_MODEL_OP_HEARTBEAT_SUB_GET
: Config Heartbeat Subscription Get

ESP_BLE_MESH_MODEL_OP_NET_KEY_GET
: Config NetKey Get

ESP_BLE_MESH_MODEL_OP_APP_KEY_GET
: Config AppKey Get

ESP_BLE_MESH_MODEL_OP_NODE_IDENTITY_GET
: Config Node Identity Get

ESP_BLE_MESH_MODEL_OP_SIG_MODEL_SUB_GET
: Config SIG Model Subscription Get

ESP_BLE_MESH_MODEL_OP_VENDOR_MODEL_SUB_GET
: Config Vendor Model Subscription Get

ESP_BLE_MESH_MODEL_OP_SIG_MODEL_APP_GET
: Config SIG Model App Get

ESP_BLE_MESH_MODEL_OP_VENDOR_MODEL_APP_GET
: Config Vendor Model App Get

ESP_BLE_MESH_MODEL_OP_KEY_REFRESH_PHASE_GET
: Config Key Refresh Phase Get

ESP_BLE_MESH_MODEL_OP_LPN_POLLTIMEOUT_GET
: Config Low Power Node PollTimeout Get

ESP_BLE_MESH_MODEL_OP_NETWORK_TRANSMIT_GET
: Config Network Transmit Get

ESP_BLE_MESH_MODEL_OP_BEACON_SET
: Config Beacon Set

ESP_BLE_MESH_MODEL_OP_DEFAULT_TTL_SET
: Config Default TTL Set

ESP_BLE_MESH_MODEL_OP_GATT_PROXY_SET
: Config GATT Proxy Set

ESP_BLE_MESH_MODEL_OP_RELAY_SET
: Config Relay Set

ESP_BLE_MESH_MODEL_OP_MODEL_PUB_SET
: Config Model Publication Set

ESP_BLE_MESH_MODEL_OP_MODEL_SUB_ADD
: Config Model Subscription Add

ESP_BLE_MESH_MODEL_OP_MODEL_SUB_VIRTUAL_ADDR_ADD
: Config Model Subscription Virtual Address Add

ESP_BLE_MESH_MODEL_OP_MODEL_SUB_DELETE
: Config Model Subscription Delete

ESP_BLE_MESH_MODEL_OP_MODEL_SUB_VIRTUAL_ADDR_DELETE
: Config Model Subscription Virtual Address Delete

ESP_BLE_MESH_MODEL_OP_MODEL_SUB_OVERWRITE
: Config Model Subscription Overwrite

ESP_BLE_MESH_MODEL_OP_MODEL_SUB_VIRTUAL_ADDR_OVERWRITE
: Config Model Subscription Virtual Address Overwrite

ESP_BLE_MESH_MODEL_OP_NET_KEY_ADD
: Config NetKey Add

ESP_BLE_MESH_MODEL_OP_APP_KEY_ADD
: Config AppKey Add

ESP_BLE_MESH_MODEL_OP_MODEL_APP_BIND
: Config Model App Bind

ESP_BLE_MESH_MODEL_OP_NODE_RESET
: Config Node Reset

ESP_BLE_MESH_MODEL_OP_FRIEND_SET
: Config Friend Set

ESP_BLE_MESH_MODEL_OP_HEARTBEAT_PUB_SET
: Config Heartbeat Publication Set

ESP_BLE_MESH_MODEL_OP_HEARTBEAT_SUB_SET
: Config Heartbeat Subscription Set

ESP_BLE_MESH_MODEL_OP_NET_KEY_UPDATE
: Config NetKey Update

ESP_BLE_MESH_MODEL_OP_NET_KEY_DELETE
: Config NetKey Delete

ESP_BLE_MESH_MODEL_OP_APP_KEY_UPDATE
: Config AppKey Update

ESP_BLE_MESH_MODEL_OP_APP_KEY_DELETE
: Config AppKey Delete

ESP_BLE_MESH_MODEL_OP_NODE_IDENTITY_SET
: Config Node Identity Set

ESP_BLE_MESH_MODEL_OP_KEY_REFRESH_PHASE_SET
: Config Key Refresh Phase Set

ESP_BLE_MESH_MODEL_OP_MODEL_PUB_VIRTUAL_ADDR_SET
: Config Model Publication Virtual Address Set

ESP_BLE_MESH_MODEL_OP_MODEL_SUB_DELETE_ALL
: Config Model Subscription Delete All

ESP_BLE_MESH_MODEL_OP_MODEL_APP_UNBIND
: Config Model App Unbind

ESP_BLE_MESH_MODEL_OP_NETWORK_TRANSMIT_SET
: Config Network Transmit Set

ESP_BLE_MESH_MODEL_OP_BEACON_STATUS

ESP_BLE_MESH_MODEL_OP_COMPOSITION_DATA_STATUS

ESP_BLE_MESH_MODEL_OP_DEFAULT_TTL_STATUS

ESP_BLE_MESH_MODEL_OP_GATT_PROXY_STATUS

ESP_BLE_MESH_MODEL_OP_RELAY_STATUS

ESP_BLE_MESH_MODEL_OP_MODEL_PUB_STATUS

ESP_BLE_MESH_MODEL_OP_MODEL_SUB_STATUS

ESP_BLE_MESH_MODEL_OP_SIG_MODEL_SUB_LIST

ESP_BLE_MESH_MODEL_OP_VENDOR_MODEL_SUB_LIST

ESP_BLE_MESH_MODEL_OP_NET_KEY_STATUS

ESP_BLE_MESH_MODEL_OP_NET_KEY_LIST

ESP_BLE_MESH_MODEL_OP_APP_KEY_STATUS

ESP_BLE_MESH_MODEL_OP_APP_KEY_LIST

ESP_BLE_MESH_MODEL_OP_NODE_IDENTITY_STATUS

ESP_BLE_MESH_MODEL_OP_MODEL_APP_STATUS

ESP_BLE_MESH_MODEL_OP_SIG_MODEL_APP_LIST

ESP_BLE_MESH_MODEL_OP_VENDOR_MODEL_APP_LIST

ESP_BLE_MESH_MODEL_OP_NODE_RESET_STATUS

ESP_BLE_MESH_MODEL_OP_FRIEND_STATUS

ESP_BLE_MESH_MODEL_OP_KEY_REFRESH_PHASE_STATUS

ESP_BLE_MESH_MODEL_OP_HEARTBEAT_PUB_STATUS

ESP_BLE_MESH_MODEL_OP_HEARTBEAT_SUB_STATUS

ESP_BLE_MESH_MODEL_OP_LPN_POLLTIMEOUT_STATUS

ESP_BLE_MESH_MODEL_OP_NETWORK_TRANSMIT_STATUS

ESP_BLE_MESH_CFG_STATUS_SUCCESS

ESP_BLE_MESH_CFG_STATUS_INVALID_ADDRESS

ESP_BLE_MESH_CFG_STATUS_INVALID_MODEL

ESP_BLE_MESH_CFG_STATUS_INVALID_APPKEY

ESP_BLE_MESH_CFG_STATUS_INVALID_NETKEY

ESP_BLE_MESH_CFG_STATUS_INSUFFICIENT_RESOURCES

ESP_BLE_MESH_CFG_STATUS_KEY_INDEX_ALREADY_STORED

ESP_BLE_MESH_CFG_STATUS_INVALID_PUBLISH_PARAMETERS

ESP_BLE_MESH_CFG_STATUS_NOT_A_SUBSCRIBE_MODEL

ESP_BLE_MESH_CFG_STATUS_STORAGE_FAILURE

ESP_BLE_MESH_CFG_STATUS_FEATURE_NOT_SUPPORTED

ESP_BLE_MESH_CFG_STATUS_CANNOT_UPDATE

ESP_BLE_MESH_CFG_STATUS_CANNOT_REMOVE

ESP_BLE_MESH_CFG_STATUS_CANNOT_BIND

ESP_BLE_MESH_CFG_STATUS_TEMP_UNABLE_TO_CHANGE_STATE

ESP_BLE_MESH_CFG_STATUS_CANNOT_SET

ESP_BLE_MESH_CFG_STATUS_UNSPECIFIED_ERROR

ESP_BLE_MESH_CFG_STATUS_INVALID_BINDING

ESP_BLE_MESH_MODEL_OP_HEALTH_FAULT_GET
: Health Fault Get

ESP_BLE_MESH_MODEL_OP_HEALTH_PERIOD_GET
: Health Period Get

ESP_BLE_MESH_MODEL_OP_ATTENTION_GET
: Health Attention Get

ESP_BLE_MESH_MODEL_OP_HEALTH_FAULT_CLEAR
: Health Fault Clear

ESP_BLE_MESH_MODEL_OP_HEALTH_FAULT_CLEAR_UNACK
: Health Fault Clear Unacknowledged

ESP_BLE_MESH_MODEL_OP_HEALTH_FAULT_TEST
: Health Fault Test

ESP_BLE_MESH_MODEL_OP_HEALTH_FAULT_TEST_UNACK
: Health Fault Test Unacknowledged

ESP_BLE_MESH_MODEL_OP_HEALTH_PERIOD_SET
: Health Period Set

ESP_BLE_MESH_MODEL_OP_HEALTH_PERIOD_SET_UNACK
: Health Period Set Unacknowledged

ESP_BLE_MESH_MODEL_OP_ATTENTION_SET
: Health Attention Set

ESP_BLE_MESH_MODEL_OP_ATTENTION_SET_UNACK
: Health Attention Set Unacknowledged

ESP_BLE_MESH_MODEL_OP_HEALTH_CURRENT_STATUS

ESP_BLE_MESH_MODEL_OP_HEALTH_FAULT_STATUS

ESP_BLE_MESH_MODEL_OP_HEALTH_PERIOD_STATUS

ESP_BLE_MESH_MODEL_OP_ATTENTION_STATUS

ESP_BLE_MESH_MODEL_OP_GEN_ONOFF_GET

ESP_BLE_MESH_MODEL_OP_GEN_ONOFF_SET

ESP_BLE_MESH_MODEL_OP_GEN_ONOFF_SET_UNACK

ESP_BLE_MESH_MODEL_OP_GEN_ONOFF_STATUS
: Generic Level Message Opcode

ESP_BLE_MESH_MODEL_OP_GEN_LEVEL_GET

ESP_BLE_MESH_MODEL_OP_GEN_LEVEL_SET

ESP_BLE_MESH_MODEL_OP_GEN_LEVEL_SET_UNACK

ESP_BLE_MESH_MODEL_OP_GEN_LEVEL_STATUS

ESP_BLE_MESH_MODEL_OP_GEN_DELTA_SET

ESP_BLE_MESH_MODEL_OP_GEN_DELTA_SET_UNACK

ESP_BLE_MESH_MODEL_OP_GEN_MOVE_SET

ESP_BLE_MESH_MODEL_OP_GEN_MOVE_SET_UNACK
: Generic Default Transition Time Message Opcode

ESP_BLE_MESH_MODEL_OP_GEN_DEF_TRANS_TIME_GET

ESP_BLE_MESH_MODEL_OP_GEN_DEF_TRANS_TIME_SET

ESP_BLE_MESH_MODEL_OP_GEN_DEF_TRANS_TIME_SET_UNACK

ESP_BLE_MESH_MODEL_OP_GEN_DEF_TRANS_TIME_STATUS
: Generic Power OnOff Message Opcode

ESP_BLE_MESH_MODEL_OP_GEN_ONPOWERUP_GET

ESP_BLE_MESH_MODEL_OP_GEN_ONPOWERUP_STATUS
: Generic Power OnOff Setup Message Opcode

ESP_BLE_MESH_MODEL_OP_GEN_ONPOWERUP_SET

ESP_BLE_MESH_MODEL_OP_GEN_ONPOWERUP_SET_UNACK

Generic Power Level Message Opcode

ESP_BLE_MESH_MODEL_OP_GEN_POWER_LEVEL_GET

ESP_BLE_MESH_MODEL_OP_GEN_POWER_LEVEL_SET

ESP_BLE_MESH_MODEL_OP_GEN_POWER_LEVEL_SET_UNACK

ESP_BLE_MESH_MODEL_OP_GEN_POWER_LEVEL_STATUS

ESP_BLE_MESH_MODEL_OP_GEN_POWER_LAST_GET

ESP_BLE_MESH_MODEL_OP_GEN_POWER_LAST_STATUS

ESP_BLE_MESH_MODEL_OP_GEN_POWER_DEFAULT_GET

ESP_BLE_MESH_MODEL_OP_GEN_POWER_DEFAULT_STATUS

ESP_BLE_MESH_MODEL_OP_GEN_POWER_RANGE_GET

ESP_BLE_MESH_MODEL_OP_GEN_POWER_RANGE_STATUS

Generic Power Level Setup Message Opcode

ESP_BLE_MESH_MODEL_OP_GEN_POWER_DEFAULT_SET

ESP_BLE_MESH_MODEL_OP_GEN_POWER_DEFAULT_SET_UNACK

ESP_BLE_MESH_MODEL_OP_GEN_POWER_RANGE_SET

ESP_BLE_MESH_MODEL_OP_GEN_POWER_RANGE_SET_UNACK

Generic Battery Message Opcode

ESP_BLE_MESH_MODEL_OP_GEN_BATTERY_GET

ESP_BLE_MESH_MODEL_OP_GEN_BATTERY_STATUS

Generic Location Message Opcode

ESP_BLE_MESH_MODEL_OP_GEN_LOC_GLOBAL_GET

ESP_BLE_MESH_MODEL_OP_GEN_LOC_GLOBAL_STATUS

ESP_BLE_MESH_MODEL_OP_GEN_LOC_LOCAL_GET

ESP_BLE_MESH_MODEL_OP_GEN_LOC_LOCAL_STATUS

Generic Location Setup Message Opcode

ESP_BLE_MESH_MODEL_OP_GEN_LOC_GLOBAL_SET

ESP_BLE_MESH_MODEL_OP_GEN_LOC_GLOBAL_SET_UNACK

ESP_BLE_MESH_MODEL_OP_GEN_LOC_LOCAL_SET

ESP_BLE_MESH_MODEL_OP_GEN_LOC_LOCAL_SET_UNACK

Generic Manufacturer Property Message Opcode

ESP_BLE_MESH_MODEL_OP_GEN_MANUFACTURER_PROPERTIES_GET

ESP_BLE_MESH_MODEL_OP_GEN_MANUFACTURER_PROPERTIES_STATUS

ESP_BLE_MESH_MODEL_OP_GEN_MANUFACTURER_PROPERTY_GET

ESP_BLE_MESH_MODEL_OP_GEN_MANUFACTURER_PROPERTY_SET

ESP_BLE_MESH_MODEL_OP_GEN_MANUFACTURER_PROPERTY_SET_UNACK

ESP_BLE_MESH_MODEL_OP_GEN_MANUFACTURER_PROPERTY_STATUS
Generic Admin Property Message Opcode

ESP_BLE_MESH_MODEL_OP_GEN_ADMIN_PROPERTIES_GET

ESP_BLE_MESH_MODEL_OP_GEN_ADMIN_PROPERTIES_STATUS

ESP_BLE_MESH_MODEL_OP_GEN_ADMIN_PROPERTY_GET

ESP_BLE_MESH_MODEL_OP_GEN_ADMIN_PROPERTY_SET

ESP_BLE_MESH_MODEL_OP_GEN_ADMIN_PROPERTY_SET_UNACK

ESP_BLE_MESH_MODEL_OP_GEN_ADMIN_PROPERTY_STATUS
Generic User Property Message Opcode

ESP_BLE_MESH_MODEL_OP_GEN_USER_PROPERTIES_GET

ESP_BLE_MESH_MODEL_OP_GEN_USER_PROPERTIES_STATUS

ESP_BLE_MESH_MODEL_OP_GEN_USER_PROPERTY_GET

ESP_BLE_MESH_MODEL_OP_GEN_USER_PROPERTY_SET

ESP_BLE_MESH_MODEL_OP_GEN_USER_PROPERTY_SET_UNACK

ESP_BLE_MESH_MODEL_OP_GEN_USER_PROPERTY_STATUS
Generic Client Property Message Opcode

ESP_BLE_MESH_MODEL_OP_GEN_CLIENT_PROPERTIES_GET

ESP_BLE_MESH_MODEL_OP_GEN_CLIENT_PROPERTIES_STATUS

ESP_BLE_MESH_MODEL_OP_SENSOR_DESCRIPTOR_GET

ESP_BLE_MESH_MODEL_OP_SENSOR_DESCRIPTOR_STATUS

ESP_BLE_MESH_MODEL_OP_SENSOR_GET

ESP_BLE_MESH_MODEL_OP_SENSOR_STATUS

ESP_BLE_MESH_MODEL_OP_SENSOR_COLUMN_GET

ESP_BLE_MESH_MODEL_OP_SENSOR_COLUMN_STATUS

ESP_BLE_MESH_MODEL_OP_SENSOR_SERIES_GET

ESP_BLE_MESH_MODEL_OP_SENSOR_SERIES_STATUS
Sensor Setup Message Opcode

ESP_BLE_MESH_MODEL_OP_SENSOR_CADENCE_GET

ESP_BLE_MESH_MODEL_OP_SENSOR_CADENCE_SET

ESP_BLE_MESH_MODEL_OP_SENSOR_CADENCE_SET_UNACK

ESP_BLE_MESH_MODEL_OP_SENSOR_CADENCE_STATUS

ESP_BLE_MESH_MODEL_OP_SENSOR_SETTINGS_GET

ESP_BLE_MESH_MODEL_OP_SENSOR_SETTINGS_STATUS

ESP_BLE_MESH_MODEL_OP_SENSOR_SETTING_GET

ESP_BLE_MESH_MODEL_OP_SENSOR_SETTING_SET

ESP_BLE_MESH_MODEL_OP_SENSOR_SETTING_SET_UNACK

ESP_BLE_MESH_MODEL_OP_SENSOR_SETTING_STATUS

ESP_BLE_MESH_MODEL_OP_TIME_GET

ESP_BLE_MESH_MODEL_OP_TIME_SET

ESP_BLE_MESH_MODEL_OP_TIME_STATUS

ESP_BLE_MESH_MODEL_OP_TIME_ROLE_GET

ESP_BLE_MESH_MODEL_OP_TIME_ROLE_SET

ESP_BLE_MESH_MODEL_OP_TIME_ROLE_STATUS

ESP_BLE_MESH_MODEL_OP_TIME_ZONE_GET

ESP_BLE_MESH_MODEL_OP_TIME_ZONE_SET

ESP_BLE_MESH_MODEL_OP_TIME_ZONE_STATUS

ESP_BLE_MESH_MODEL_OP_TAI_UTC_DELTA_GET

ESP_BLE_MESH_MODEL_OP_TAI_UTC_DELTA_SET

ESP_BLE_MESH_MODEL_OP_TAI_UTC_DELTA_STATUS

Scene Message Opcode

ESP_BLE_MESH_MODEL_OP_SCENE_GET

ESP_BLE_MESH_MODEL_OP_SCENE_RECALL

ESP_BLE_MESH_MODEL_OP_SCENE_RECALL_UNACK

ESP_BLE_MESH_MODEL_OP_SCENE_STATUS

ESP_BLE_MESH_MODEL_OP_SCENE_REGISTER_GET

ESP_BLE_MESH_MODEL_OP_SCENE_REGISTER_STATUS

Scene Setup Message Opcode

ESP_BLE_MESH_MODEL_OP_SCENE_STORE

ESP_BLE_MESH_MODEL_OP_SCENE_STORE_UNACK

ESP_BLE_MESH_MODEL_OP_SCENE_DELETE

ESP_BLE_MESH_MODEL_OP_SCENE_DELETE_UNACK

Scheduler Message Opcode

ESP_BLE_MESH_MODEL_OP_SCHEDULER_ACT_GET

ESP_BLE_MESH_MODEL_OP_SCHEDULER_ACT_STATUS

ESP_BLE_MESH_MODEL_OP_SCHEDULER_GET

ESP_BLE_MESH_MODEL_OP_SCHEDULER_STATUS

Scheduler Setup Message Opcode

ESP_BLE_MESH_MODEL_OP_SCHEDULER_ACT_SET

ESP_BLE_MESH_MODEL_OP_SCHEDULER_ACT_SET_UNACK

ESP_BLE_MESH_MODEL_OP_LIGHT_LIGHTNESS_GET

ESP_BLE_MESH_MODEL_OP_LIGHT_LIGHTNESS_SET

ESP_BLE_MESH_MODEL_OP_LIGHT_LIGHTNESS_SET_UNACK

ESP_BLE_MESH_MODEL_OP_LIGHT_LIGHTNESS_STATUS

ESP_BLE_MESH_MODEL_OP_LIGHT_LIGHTNESS_LINEAR_GET

ESP_BLE_MESH_MODEL_OP_LIGHT_LIGHTNESS_LINEAR_SET

ESP_BLE_MESH_MODEL_OP_LIGHT_LIGHTNESS_LINEAR_SET_UNACK

ESP_BLE_MESH_MODEL_OP_LIGHT_LIGHTNESS_LINEAR_STATUS

ESP_BLE_MESH_MODEL_OP_LIGHT_LIGHTNESS_LAST_GET

ESP_BLE_MESH_MODEL_OP_LIGHT_LIGHTNESS_LAST_STATUS

ESP_BLE_MESH_MODEL_OP_LIGHT_LIGHTNESS_DEFAULT_GET

ESP_BLE_MESH_MODEL_OP_LIGHT_LIGHTNESS_DEFAULT_STATUS

ESP_BLE_MESH_MODEL_OP_LIGHT_LIGHTNESS_RANGE_GET

ESP_BLE_MESH_MODEL_OP_LIGHT_LIGHTNESS_RANGE_STATUS

Light Lightness Setup Message Opcode

ESP_BLE_MESH_MODEL_OP_LIGHT_LIGHTNESS_DEFAULT_SET

ESP_BLE_MESH_MODEL_OP_LIGHT_LIGHTNESS_DEFAULT_SET_UNACK

ESP_BLE_MESH_MODEL_OP_LIGHT_LIGHTNESS_RANGE_SET

ESP_BLE_MESH_MODEL_OP_LIGHT_LIGHTNESS_RANGE_SET_UNACK

Light CTL Message Opcode

ESP_BLE_MESH_MODEL_OP_LIGHT_CTL_GET

ESP_BLE_MESH_MODEL_OP_LIGHT_CTL_SET

ESP_BLE_MESH_MODEL_OP_LIGHT_CTL_SET_UNACK

ESP_BLE_MESH_MODEL_OP_LIGHT_CTL_STATUS

ESP_BLE_MESH_MODEL_OP_LIGHT_CTL_TEMPERATURE_GET

ESP_BLE_MESH_MODEL_OP_LIGHT_CTL_TEMPERATURE_RANGE_GET

ESP_BLE_MESH_MODEL_OP_LIGHT_CTL_TEMPERATURE_RANGE_STATUS

ESP_BLE_MESH_MODEL_OP_LIGHT_CTL_TEMPERATURE_SET

ESP_BLE_MESH_MODEL_OP_LIGHT_CTL_TEMPERATURE_SET_UNACK

ESP_BLE_MESH_MODEL_OP_LIGHT_CTL_TEMPERATURE_STATUS

ESP_BLE_MESH_MODEL_OP_LIGHT_CTL_DEFAULT_GET

ESP_BLE_MESH_MODEL_OP_LIGHT_CTL_DEFAULT_STATUS
Light CTL Setup Message Opcode

ESP_BLE_MESH_MODEL_OP_LIGHT_CTL_DEFAULT_SET

ESP_BLE_MESH_MODEL_OP_LIGHT_CTL_DEFAULT_SET_UNACK

ESP_BLE_MESH_MODEL_OP_LIGHT_CTL_TEMPERATURE_RANGE_SET

ESP_BLE_MESH_MODEL_OP_LIGHT_CTL_TEMPERATURE_RANGE_SET_UNACK
Light HSL Message Opcode

ESP_BLE_MESH_MODEL_OP_LIGHT_HSL_GET

ESP_BLE_MESH_MODEL_OP_LIGHT_HSL_HUE_GET

ESP_BLE_MESH_MODEL_OP_LIGHT_HSL_HUE_SET

ESP_BLE_MESH_MODEL_OP_LIGHT_HSL_HUE_SET_UNACK

ESP_BLE_MESH_MODEL_OP_LIGHT_HSL_HUE_STATUS

ESP_BLE_MESH_MODEL_OP_LIGHT_HSL_SATURATION_GET

ESP_BLE_MESH_MODEL_OP_LIGHT_HSL_SATURATION_SET

ESP_BLE_MESH_MODEL_OP_LIGHT_HSL_SATURATION_SET_UNACK

ESP_BLE_MESH_MODEL_OP_LIGHT_HSL_SATURATION_STATUS

ESP_BLE_MESH_MODEL_OP_LIGHT_HSL_SET

ESP_BLE_MESH_MODEL_OP_LIGHT_HSL_SET_UNACK

ESP_BLE_MESH_MODEL_OP_LIGHT_HSL_STATUS

ESP_BLE_MESH_MODEL_OP_LIGHT_HSL_TARGET_GET

ESP_BLE_MESH_MODEL_OP_LIGHT_HSL_TARGET_STATUS

ESP_BLE_MESH_MODEL_OP_LIGHT_HSL_DEFAULT_GET

ESP_BLE_MESH_MODEL_OP_LIGHT_HSL_DEFAULT_STATUS

ESP_BLE_MESH_MODEL_OP_LIGHT_HSL_RANGE_GET

ESP_BLE_MESH_MODEL_OP_LIGHT_HSL_RANGE_STATUS
Light HSL Setup Message Opcode

ESP_BLE_MESH_MODEL_OP_LIGHT_HSL_DEFAULT_SET

ESP_BLE_MESH_MODEL_OP_LIGHT_HSL_DEFAULT_SET_UNACK

ESP_BLE_MESH_MODEL_OP_LIGHT_HSL_RANGE_SET

ESP_BLE_MESH_MODEL_OP_LIGHT_HSL_RANGE_SET_UNACK
Light xyL Message Opcode

ESP_BLE_MESH_MODEL_OP_LIGHT_XYL_GET

ESP_BLE_MESH_MODEL_OP_LIGHT_XYL_SET

ESP_BLE_MESH_MODEL_OP_LIGHT_XYL_SET_UNACK

ESP_BLE_MESH_MODEL_OP_LIGHT_XYL_STATUS

ESP_BLE_MESH_MODEL_OP_LIGHT_XYL_TARGET_GET

ESP_BLE_MESH_MODEL_OP_LIGHT_XYL_TARGET_STATUS

ESP_BLE_MESH_MODEL_OP_LIGHT_XYL_DEFAULT_GET

ESP_BLE_MESH_MODEL_OP_LIGHT_XYL_DEFAULT_STATUS

ESP_BLE_MESH_MODEL_OP_LIGHT_XYL_RANGE_GET

ESP_BLE_MESH_MODEL_OP_LIGHT_XYL_RANGE_STATUS
Light xyL Setup Message Opcode

ESP_BLE_MESH_MODEL_OP_LIGHT_XYL_DEFAULT_SET

ESP_BLE_MESH_MODEL_OP_LIGHT_XYL_DEFAULT_SET_UNACK

ESP_BLE_MESH_MODEL_OP_LIGHT_XYL_RANGE_SET

ESP_BLE_MESH_MODEL_OP_LIGHT_XYL_RANGE_SET_UNACK
Light Control Message Opcode

ESP_BLE_MESH_MODEL_OP_LIGHT_LC_MODE_GET

ESP_BLE_MESH_MODEL_OP_LIGHT_LC_MODE_SET

ESP_BLE_MESH_MODEL_OP_LIGHT_LC_MODE_SET_UNACK

ESP_BLE_MESH_MODEL_OP_LIGHT_LC_MODE_STATUS

ESP_BLE_MESH_MODEL_OP_LIGHT_LC_OM_GET

ESP_BLE_MESH_MODEL_OP_LIGHT_LC_OM_SET

ESP_BLE_MESH_MODEL_OP_LIGHT_LC_OM_SET_UNACK

ESP_BLE_MESH_MODEL_OP_LIGHT_LC_OM_STATUS

ESP_BLE_MESH_MODEL_OP_LIGHT_LC_LIGHT_ONOFF_GET

ESP_BLE_MESH_MODEL_OP_LIGHT_LC_LIGHT_ONOFF_SET

ESP_BLE_MESH_MODEL_OP_LIGHT_LC_LIGHT_ONOFF_SET_UNACK

ESP_BLE_MESH_MODEL_OP_LIGHT_LC_LIGHT_ONOFF_STATUS

ESP_BLE_MESH_MODEL_OP_LIGHT_LC_PROPERTY_GET

ESP_BLE_MESH_MODEL_OP_LIGHT_LC_PROPERTY_SET

ESP_BLE_MESH_MODEL_OP_LIGHT_LC_PROPERTY_SET_UNACK

ESP_BLE_MESH_MODEL_OP_LIGHT_LC_PROPERTY_STATUS

ESP_BLE_MESH_MODEL_STATUS_SUCCESS

ESP_BLE_MESH_MODEL_STATUS_CANNOT_SET_RANGE_MIN

ESP_BLE_MESH_MODEL_STATUS_CANNOT_SET_RANGE_MAX

ESP_BLE_MESH_SERVER_RSP_BY_APP
: Response need to be sent in the application

ESP_BLE_MESH_SERVER_AUTO_RSP
: Response will be sent internally

Type Definitions

typedef uint8_t esp_ble_mesh_octet16_t[ESP_BLE_MESH_OCTET16_LEN]
: Define the BLE Mesh octet 8 bytes size

typedef uint8_t esp_ble_mesh_octet8_t[ESP_BLE_MESH_OCTET8_LEN]
: Invalid Company ID

typedef uint32_t esp_ble_mesh_cb_t

typedef uint8_t UINT8

typedef uint16_t UINT16

typedef uint32_t UINT32

typedef uint64_t UINT64

typedef *UINT8* BT_OCTET32[BT_OCTET32_LEN]

typedef uint8_t **BD_ADDR**[**BD_ADDR_LEN**]

typedef uint8_t **esp_ble_mesh_bd_addr_t**[**BD_ADDR_LEN**]

typedef uint8_t **esp_ble_mesh_addr_type_t**

BLE device address type.

typedef struct *esp_ble_mesh_model* **esp_ble_mesh_model_t**

typedef uint8_t **esp_ble_mesh_dev_add_flag_t**

typedef uint32_t **esp_ble_mesh_opcode_config_client_get_t**

esp_ble_mesh_opcode_config_client_get_t belongs to esp_ble_mesh_opcode_t, this typedef is only used to locate the opcodes used by esp_ble_mesh_config_client_get_state. The following opcodes will only be used in the esp_ble_mesh_config_client_get_state function.

typedef uint32_t **esp_ble_mesh_opcode_config_client_set_t**

esp_ble_mesh_opcode_config_client_set_t belongs to esp_ble_mesh_opcode_t, this typedef is only used to locate the opcodes used by esp_ble_mesh_config_client_set_state. The following opcodes will only be used in the esp_ble_mesh_config_client_set_state function.

typedef uint32_t **esp_ble_mesh_opcode_config_status_t**

esp_ble_mesh_opcode_config_status_t belongs to esp_ble_mesh_opcode_t, this typedef is only used to locate the opcodes used by the Config Model messages The following opcodes are used by the BLE Mesh Config Server Model internally to respond to the Config Client Model' s request messages.

typedef uint8_t **esp_ble_mesh_cfg_status_t**

This typedef is only used to indicate the status code contained in some of the Configuration Server Model status message.

typedef uint32_t **esp_ble_mesh_opcode_health_client_get_t**

esp_ble_mesh_opcode_health_client_get_t belongs to esp_ble_mesh_opcode_t, this typedef is only used to locate the opcodes used by esp_ble_mesh_health_client_get_state. The following opcodes will only be used in the esp_ble_mesh_health_client_get_state function.

typedef uint32_t **esp_ble_mesh_opcode_health_client_set_t**

esp_ble_mesh_opcode_health_client_set_t belongs to esp_ble_mesh_opcode_t, this typedef is only used to locate the opcodes used by esp_ble_mesh_health_client_set_state. The following opcodes will only be used in the esp_ble_mesh_health_client_set_state function.

typedef uint32_t **esp_ble_mesh_health_model_status_t**

esp_ble_mesh_health_model_status_t belongs to esp_ble_mesh_opcode_t, this typedef is only used to locate the opcodes used by the Health Model messages. The following opcodes are used by the BLE Mesh Health Server Model internally to respond to the Health Client Model' s request messages.

typedef uint32_t **esp_ble_mesh_generic_message_opcode_t**

esp_ble_mesh_generic_message_opcode_t belongs to esp_ble_mesh_opcode_t, this typedef is

only used to locate the opcodes used by functions esp_ble_mesh_generic_client_get_state & esp_ble_mesh_generic_client_set_state.Generic OnOff Message Opcode

typedef uint32_t **esp_ble_mesh_sensor_message_opcode_t**

esp_ble_mesh_sensor_message_opcode_t belongs to esp_ble_mesh_opcode_t, this typedef is only used to locate the opcodes used by functions esp_ble_mesh_sensor_client_get_state & esp_ble_mesh_sensor_client_set_state.Sensor Message Opcode

typedef uint32_t **esp_ble_mesh_time_scene_message_opcode_t**

esp_ble_mesh_time_scene_message_opcode_t belongs to esp_ble_mesh_opcode_t, this typedef is only used to locate the opcodes used by functions esp_ble_mesh_time_scene_client_get_state & esp_ble_mesh_time_scene_client_set_state.Time Message Opcode

typedef uint32_t **esp_ble_mesh_light_message_opcode_t**

esp_ble_mesh_light_message_opcode_t belongs to esp_ble_mesh_opcode_t, this typedef is only used to locate the opcodes used by functions esp_ble_mesh_light_client_get_state & esp_ble_mesh_light_client_set_state.Light Lightness Message Opcode

typedef uint32_t **esp_ble_mesh_opcode_t**

End of defines of esp_ble_mesh_opcode_t

typedef uint8_t **esp_ble_mesh_model_status_t**

This typedef is only used to indicate the status code contained in some of the server models (e.g. Generic Server Model) status message.

Enumerations

enum esp_ble_mesh_cb_type_t

Values:

ESP_BLE_MESH_TYPE_PROV_CB

ESP_BLE_MESH_TYPE_OUTPUT_NUM_CB

ESP_BLE_MESH_TYPE_OUTPUT_STR_CB

ESP_BLE_MESH_TYPE_INTPUT_CB

ESP_BLE_MESH_TYPE_LINK_OPEN_CB

ESP_BLE_MESH_TYPE_LINK_CLOSE_CB

ESP_BLE_MESH_TYPE_COMPLETE_CB

ESP_BLE_MESH_TYPE_RESET_CB

enum esp_ble_mesh_oob_method_t

Values:

ESP_BLE_MESH_NO_OOB

ESP_BLE_MESH_STATIC_OOB

ESP_BLE_MESH_OUTPUT_OOB

ESP_BLE_MESH_INPUT_OOB

enum esp_ble_mesh_output_action_t

Values:

ESP_BLE_MESH_NO_OUTPUT = 0

ESP_BLE_MESH_BLINK = BIT(0)

ESP_BLE_MESH_BEEP = BIT(1)

ESP_BLE_MESH_VIBRATE = BIT(2)

ESP_BLE_MESH_DISPLAY_NUMBER = BIT(3)

ESP_BLE_MESH_DISPLAY_STRING = BIT(4)

enum esp_ble_mesh_input_action_t

Values:

ESP_BLE_MESH_NO_INPUT = 0

ESP_BLE_MESH_PUSH = BIT(0)

ESP_BLE_MESH_TWIST = BIT(1)

ESP_BLE_MESH_ENTER_NUMBER = BIT(2)

ESP_BLE_MESH_ENTER_STRING = BIT(3)

enum esp_ble_mesh_prov_bearer_t

Values:

ESP_BLE_MESH_PROV_ADV = BIT(0)

ESP_BLE_MESH_PROV_GATT = BIT(1)

enum esp_ble_mesh_prov_oob_info_t

Values:

ESP_BLE_MESH_PROV_OOB_OTHER = BIT(0)

ESP_BLE_MESH_PROV_OOB_URI = BIT(1)

ESP_BLE_MESH_PROV_OOB_2D_CODE = BIT(2)

ESP_BLE_MESH_PROV_OOB_BAR_CODE = BIT(3)

ESP_BLE_MESH_PROV_OOB_NFC = BIT(4)

ESP_BLE_MESH_PROV_OOB_NUMBER = BIT(5)

ESP_BLE_MESH_PROV_OOB_STRING = BIT(6)

ESP_BLE_MESH_PROV_OOB_ON_BOX = BIT(11)

ESP_BLE_MESH_PROV_OOB_IN_BOX = BIT(12)

ESP_BLE_MESH_PROV_OOB_ON_PAPER = BIT(13)

ESP_BLE_MESH_PROV_OOB_IN_MANUAL = BIT(14)

ESP_BLE_MESH_PROV_OOB_ON_DEV = BIT(15)

enum esp_ble_mesh_dev_role_t

Values:

ROLE_NODE = 0

ROLE_PROVISIONER

ROLE_FAST_PROV

enum esp_ble_mesh_fast_prov_action_t

Values:

FAST_PROV_ACT_NONE

FAST_PROV_ACT_ENTER

FAST_PROV_ACT_SUSPEND

FAST_PROV_ACT_EXIT

FAST_PROV_ACT_MAX

enum esp_ble_mesh_proxy_filter_type_t

Values:

PROXY_FILTER_WHITELIST

PROXY_FILTER_BLACKLIST

enum esp_ble_mesh_ble_adv_priority_t

Values:

ESP_BLE_MESH_BLE_ADV_PRIO_LOW

ESP_BLE_MESH_BLE_ADV_PRIO_HIGH

enum esp_ble_mesh_prov_cb_event_t

Values:

ESP_BLE_MESH_PROV_REGISTER_COMP_EVT

Initialize BLE Mesh provisioning capabilities and internal data information completion event

ESP_BLE_MESH_NODE_SET_UNPROV_DEV_NAME_COMP_EVT

Set the unprovisioned device name completion event

`ESP_BLE_MESH_NODE_PROV_ENABLE_COMP_EVT`
Enable node provisioning functionality completion event

`ESP_BLE_MESH_NODE_PROV_DISABLE_COMP_EVT`
Disable node provisioning functionality completion event

`ESP_BLE_MESH_NODE_PROV_LINK_OPEN_EVT`
Establish a BLE Mesh link event

`ESP_BLE_MESH_NODE_PROV_LINK_CLOSE_EVT`
Close a BLE Mesh link event

`ESP_BLE_MESH_NODE_PROV_OOB_PUB_KEY_EVT`
Generate Node input OOB public key event

`ESP_BLE_MESH_NODE_PROV_OUTPUT_NUMBER_EVT`
Generate Node Output Number event

`ESP_BLE_MESH_NODE_PROV_OUTPUT_STRING_EVT`
Generate Node Output String event

`ESP_BLE_MESH_NODE_PROV_INPUT_EVT`
Event requiring the user to input a number or string

`ESP_BLE_MESH_NODE_PROV_COMPLETE_EVT`
Provisioning done event

`ESP_BLE_MESH_NODE_PROV_RESET_EVT`
Provisioning reset event

`ESP_BLE_MESH_NODE_PROV_SET_OOB_PUB_KEY_COMP_EVT`
Node set oob public key completion event

`ESP_BLE_MESH_NODE_PROV_INPUT_NUMBER_COMP_EVT`
Node input number completion event

`ESP_BLE_MESH_NODE_PROV_INPUT_STRING_COMP_EVT`
Node input string completion event

`ESP_BLE_MESH_NODE_PROXY_IDENTITY_ENABLE_COMP_EVT`
Enable BLE Mesh Proxy Identity advertising completion event

`ESP_BLE_MESH_NODE_PROXY_GATT_ENABLE_COMP_EVT`
Enable BLE Mesh GATT Proxy Service completion event

`ESP_BLE_MESH_NODE_PROXY_GATT_DISABLE_COMP_EVT`
Disable BLE Mesh GATT Proxy Service completion event

`ESP_BLE_MESH_NODE_ADD_LOCAL_NET_KEY_COMP_EVT`
Node add NetKey locally completion event

ESP_BLE_MESH_NODE_ADD_LOCAL_APP_KEY_COMP_EVT
: Node add AppKey locally completion event

ESP_BLE_MESH_NODE_BIND_APP_KEY_TO_MODEL_COMP_EVT
: Node bind AppKey to model locally completion event

ESP_BLE_MESH_PROVISIONER_PROV_ENABLE_COMP_EVT
: Provisioner enable provisioning functionality completion event

ESP_BLE_MESH_PROVISIONER_PROV_DISABLE_COMP_EVT
: Provisioner disable provisioning functionality completion event

ESP_BLE_MESH_PROVISIONER_RECV_UNPROV_ADV_PKT_EVT
: Provisioner receives unprovisioned device beacon event

ESP_BLE_MESH_PROVISIONER_PROV_READ_OOB_PUB_KEY_EVT
: Provisioner read unprovisioned device OOB public key event

ESP_BLE_MESH_PROVISIONER_PROV_INPUT_EVT
: Provisioner input value for provisioning procedure event

ESP_BLE_MESH_PROVISIONER_PROV_OUTPUT_EVT
: Provisioner output value for provisioning procedure event

ESP_BLE_MESH_PROVISIONER_PROV_LINK_OPEN_EVT
: Provisioner establish a BLE Mesh link event

ESP_BLE_MESH_PROVISIONER_PROV_LINK_CLOSE_EVT
: Provisioner close a BLE Mesh link event

ESP_BLE_MESH_PROVISIONER_PROV_COMPLETE_EVT
: Provisioner provisioning done event

ESP_BLE_MESH_PROVISIONER_ADD_UNPROV_DEV_COMP_EVT
: Provisioner add a device to the list which contains devices that are waiting/going to be provisioned completion event

ESP_BLE_MESH_PROVISIONER_PROV_DEV_WITH_ADDR_COMP_EVT
: Provisioner start to provision an unprovisioned device completion event

ESP_BLE_MESH_PROVISIONER_DELETE_DEV_COMP_EVT
: Provisioner delete a device from the list, close provisioning link with the device completion event

ESP_BLE_MESH_PROVISIONER_SET_DEV_UUID_MATCH_COMP_EVT
: Provisioner set the value to be compared with part of the unprovisioned device UUID completion event

ESP_BLE_MESH_PROVISIONER_SET_PROV_DATA_INFO_COMP_EVT
: Provisioner set net_idx/flags/iv_index used for provisioning completion event

`ESP_BLE_MESH_PROVISIONER_SET_STATIC_OOB_VALUE_COMP_EVT`
Provisioner set static oob value used for provisioning completion event

`ESP_BLE_MESH_PROVISIONER_SET_PRIMARY_ELEM_ADDR_COMP_EVT`
Provisioner set unicast address of primary element completion event

`ESP_BLE_MESH_PROVISIONER_PROV_READ_OOB_PUB_KEY_COMP_EVT`
Provisioner read unprovisioned device OOB public key completion event

`ESP_BLE_MESH_PROVISIONER_PROV_INPUT_NUMBER_COMP_EVT`
Provisioner input number completion event

`ESP_BLE_MESH_PROVISIONER_PROV_INPUT_STRING_COMP_EVT`
Provisioner input string completion event

`ESP_BLE_MESH_PROVISIONER_SET_NODE_NAME_COMP_EVT`
Provisioner set node name completion event

`ESP_BLE_MESH_PROVISIONER_ADD_LOCAL_APP_KEY_COMP_EVT`
Provisioner add local app key completion event

`ESP_BLE_MESH_PROVISIONER_UPDATE_LOCAL_APP_KEY_COMP_EVT`
Provisioner update local app key completion event

`ESP_BLE_MESH_PROVISIONER_BIND_APP_KEY_TO_MODEL_COMP_EVT`
Provisioner bind local model with local app key completion event

`ESP_BLE_MESH_PROVISIONER_ADD_LOCAL_NET_KEY_COMP_EVT`
Provisioner add local network key completion event

`ESP_BLE_MESH_PROVISIONER_UPDATE_LOCAL_NET_KEY_COMP_EVT`
Provisioner update local network key completion event

`ESP_BLE_MESH_PROVISIONER_STORE_NODE_COMP_DATA_COMP_EVT`
Provisioner store node composition data completion event

`ESP_BLE_MESH_PROVISIONER_DELETE_NODE_WITH_UUID_COMP_EVT`
Provisioner delete node with uuid completion event

`ESP_BLE_MESH_PROVISIONER_DELETE_NODE_WITH_ADDR_COMP_EVT`
Provisioner delete node with unicast address completion event

`ESP_BLE_MESH_PROVISIONER_ENABLE_HEARTBEAT_RECV_COMP_EVT`
Provisioner start to receive heartbeat message completion event

`ESP_BLE_MESH_PROVISIONER_SET_HEARTBEAT_FILTER_TYPE_COMP_EVT`
Provisioner set the heartbeat filter type completion event

`ESP_BLE_MESH_PROVISIONER_SET_HEARTBEAT_FILTER_INFO_COMP_EVT`
Provisioner set the heartbeat filter information completion event

ESP_BLE_MESH_PROVISIONER_RECV_HEARTBEAT_MESSAGE_EVT
: Provisioner receive heartbeat message event

ESP_BLE_MESH_PROVISIONER_DRIECT_ERASE_SETTINGS_COMP_EVT
: Provisioner directly erase settings completion event

ESP_BLE_MESH_PROVISIONER_OPEN_SETTINGS_WITH_INDEX_COMP_EVT
: Provisioner open settings with index completion event

ESP_BLE_MESH_PROVISIONER_OPEN_SETTINGS_WITH_UID_COMP_EVT
: Provisioner open settings with user id completion event

ESP_BLE_MESH_PROVISIONER_CLOSE_SETTINGS_WITH_INDEX_COMP_EVT
: Provisioner close settings with index completion event

ESP_BLE_MESH_PROVISIONER_CLOSE_SETTINGS_WITH_UID_COMP_EVT
: Provisioner close settings with user id completion event

ESP_BLE_MESH_PROVISIONER_DELETE_SETTINGS_WITH_INDEX_COMP_EVT
: Provisioner delete settings with index completion event

ESP_BLE_MESH_PROVISIONER_DELETE_SETTINGS_WITH_UID_COMP_EVT
: Provisioner delete settings with user id completion event

ESP_BLE_MESH_SET_FAST_PROV_INFO_COMP_EVT
: Set fast provisioning information (e.g. unicast address range, net_idx, etc.) completion event

ESP_BLE_MESH_SET_FAST_PROV_ACTION_COMP_EVT
: Set fast provisioning action completion event

ESP_BLE_MESH_HEARTBEAT_MESSAGE_RECV_EVT
: Receive Heartbeat message event

ESP_BLE_MESH_LPN_ENABLE_COMP_EVT
: Enable Low Power Node completion event

ESP_BLE_MESH_LPN_DISABLE_COMP_EVT
: Disable Low Power Node completion event

ESP_BLE_MESH_LPN_POLL_COMP_EVT
: Low Power Node send Friend Poll completion event

ESP_BLE_MESH_LPN_FRIENDSHIP_ESTABLISH_EVT
: Low Power Node establishes friendship event

ESP_BLE_MESH_LPN_FRIENDSHIP_TERMINATE_EVT
: Low Power Node terminates friendship event

ESP_BLE_MESH_FRIEND_FRIENDSHIP_ESTABLISH_EVT
: Friend Node establishes friendship event

`ESP_BLE_MESH_FRIEND_FRIENDSHIP_TERMINATE_EVT`
Friend Node terminates friendship event

`ESP_BLE_MESH_PROXY_CLIENT_RECV_ADV_PKT_EVT`
Proxy Client receives Network ID advertising packet event

`ESP_BLE_MESH_PROXY_CLIENT_CONNECTED_EVT`
Proxy Client establishes connection successfully event

`ESP_BLE_MESH_PROXY_CLIENT_DISCONNECTED_EVT`
Proxy Client terminates connection successfully event

`ESP_BLE_MESH_PROXY_CLIENT_RECV_FILTER_STATUS_EVT`
Proxy Client receives Proxy Filter Status event

`ESP_BLE_MESH_PROXY_CLIENT_CONNECT_COMP_EVT`
Proxy Client connect completion event

`ESP_BLE_MESH_PROXY_CLIENT_DISCONNECT_COMP_EVT`
Proxy Client disconnect completion event

`ESP_BLE_MESH_PROXY_CLIENT_SET_FILTER_TYPE_COMP_EVT`
Proxy Client set filter type completion event

`ESP_BLE_MESH_PROXY_CLIENT_ADD_FILTER_ADDR_COMP_EVT`
Proxy Client add filter address completion event

`ESP_BLE_MESH_PROXY_CLIENT_REMOVE_FILTER_ADDR_COMP_EVT`
Proxy Client remove filter address completion event

`ESP_BLE_MESH_START_BLE_ADVERTISING_COMP_EVT`
Start BLE advertising completion event

`ESP_BLE_MESH_STOP_BLE_ADVERTISING_COMP_EVT`
Stop BLE advertising completion event

`ESP_BLE_MESH_MODEL_SUBSCRIBE_GROUP_ADDR_COMP_EVT`
Local model subscribes group address completion event

`ESP_BLE_MESH_MODEL_UNSUBSCRIBE_GROUP_ADDR_COMP_EVT`
Local model unsubscribes group address completion event

`ESP_BLE_MESH_DEINIT_MESH_COMP_EVT`
De-initialize BLE Mesh stack completion event

`ESP_BLE_MESH_PROV_EVT_MAX`

`enum [anonymous]`
BLE Mesh server models related definitions.

This enum value is the flag of transition timer operation

Values:

ESP_BLE_MESH_SERVER_TRANS_TIMER_START

ESP_BLE_MESH_SERVER_FLAG_MAX

enum esp_ble_mesh_server_state_type_t

This enum value is the type of server model states

Values:

ESP_BLE_MESH_GENERIC_ONOFF_STATE

ESP_BLE_MESH_GENERIC_LEVEL_STATE

ESP_BLE_MESH_GENERIC_ONPOWERUP_STATE

ESP_BLE_MESH_GENERIC_POWER_ACTUAL_STATE

ESP_BLE_MESH_LIGHT_LIGHTNESS_ACTUAL_STATE

ESP_BLE_MESH_LIGHT_LIGHTNESS_LINEAR_STATE

ESP_BLE_MESH_LIGHT_CTL_LIGHTNESS_STATE

ESP_BLE_MESH_LIGHT_CTL_TEMP_DELTA_UV_STATE

ESP_BLE_MESH_LIGHT_HSL_LIGHTNESS_STATE

ESP_BLE_MESH_LIGHT_HSL_HUE_STATE

ESP_BLE_MESH_LIGHT_HSL_SATURATION_STATE

ESP_BLE_MESH_LIGHT_XYL_LIGHTNESS_STATE

ESP_BLE_MESH_LIGHT_LC_LIGHT_ONOFF_STATE

ESP_BLE_MESH_SERVER_MODEL_STATE_MAX

enum esp_ble_mesh_model_cb_event_t

Values:

ESP_BLE_MESH_MODEL_OPERATION_EVT

User-defined models receive messages from peer devices (e.g. get, set, status, etc) event

ESP_BLE_MESH_MODEL_SEND_COMP_EVT

User-defined models send messages completion event

ESP_BLE_MESH_MODEL_PUBLISH_COMP_EVT

User-defined models publish messages completion event

ESP_BLE_MESH_CLIENT_MODEL_RECV_PUBLISH_MSG_EVT

User-defined client models receive publish messages event

ESP_BLE_MESH_CLIENT_MODEL_SEND_TIMEOUT_EVT

Timeout event for the user-defined client models that failed to receive response from peer server models

`ESP_BLE_MESH_MODEL_PUBLISH_UPDATE_EVT`
When a model is configured to publish messages periodically, this event will occur during every publish period

`ESP_BLE_MESH_SERVER_MODEL_UPDATE_STATE_COMP_EVT`
Server models update state value completion event

`ESP_BLE_MESH_MODEL_EVT_MAX`

ESP-BLE-MESH Core API Reference

This section contains ESP-BLE-MESH Core related APIs, which can be used to initialize ESP-BLE-MESH stack, provision, send/publish messages, etc.

This API reference covers six components:

- *ESP-BLE-MESH Stack Initialization*
- *Reading of Local Data Information*
- *Low Power Operation (Updating)*
- *Send/Publish Messages, add Local AppKey, etc.*
- *ESP-BLE-MESH Node/Provisioner Provisioning*
- *ESP-BLE-MESH GATT Proxy Server*

ESP-BLE-MESH Stack Initialization

Header File

- bt/esp_ble_mesh/api/core/include/esp_ble_mesh_common_api.h

Functions

esp_err_t **esp_ble_mesh_init**(*esp_ble_mesh_prov_t* *prov, *esp_ble_mesh_comp_t* *comp)
Initialize BLE Mesh module. This API initializes provisioning capabilities and composition data information.

Note After calling this API, the device needs to call esp_ble_mesh_prov_enable() to enable provisioning functionality again.

Return ESP_OK on success or error code otherwise.

Parameters

- `prov`: Pointer to the device provisioning capabilities. This pointer must remain valid during the lifetime of the BLE Mesh device.

- `comp`: Pointer to the device composition data information. This pointer must remain valid during the lifetime of the BLE Mesh device.

esp_err_t **esp_ble_mesh_deinit**(*esp_ble_mesh_deinit_param_t* **param*)

De-initialize BLE Mesh module.

Note This function shall be invoked after esp_ble_mesh_client_model_deinit().

Return ESP_OK on success or error code otherwise.

Parameters

- `param`: Pointer to the structure of BLE Mesh deinit parameters.

Reading of Local Data Information

Header File

- bt/esp_ble_mesh/api/core/include/esp_ble_mesh_local_data_operation_api.h

Functions

int32_t **esp_ble_mesh_get_model_publish_period**(*esp_ble_mesh_model_t* **model*)

Get the model publish period, the unit is ms.

Return Publish period value on success, 0 or (negative) error code from errno.h on failure.

Parameters

- `model`: Model instance pointer.

uint16_t **esp_ble_mesh_get_primary_element_address**(void)

Get the address of the primary element.

Return Address of the primary element on success, or ESP_BLE_MESH_ADDR_UNASSIGNED on failure which means the device has not been provisioned.

uint16_t ***esp_ble_mesh_is_model_subscribed_to_group**(*esp_ble_mesh_model_t* **model*, uint16_t *group_addr*)

Check if the model has subscribed to the given group address. Note: E.g., once a status message is received and the destination address is a group address, the model uses this API to check if it is successfully subscribed to the given group address.

Return Pointer to the group address within the Subscription List of the model on success, or NULL on failure which means the model has not subscribed to the given group address. Note: With

the pointer to the group address returned, you can reset the group address to 0x0000 in order to unsubscribe the model from the group.

Parameters

- `model`: Pointer to the model.
- `group_addr`: Group address.

esp_ble_mesh_elem_t ***esp_ble_mesh_find_element**(uint16_t *element_addr*)

Find the BLE Mesh element pointer via the element address.

Return Pointer to the element on success, or NULL on failure.

Parameters

- `element_addr`: Element address.

uint8_t **esp_ble_mesh_get_element_count**(void)

Get the number of elements that have been registered.

Return Number of elements.

esp_ble_mesh_model_t ***esp_ble_mesh_find_vendor_model**(const *esp_ble_mesh_elem_t* **element*, uint16_t *company_id*, uint16_t *model_id*)

Find the Vendor specific model with the given element, the company ID and the Vendor Model ID.

Return Pointer to the Vendor Model on success, or NULL on failure which means the Vendor Model is not found.

Parameters

- `element`: Element to which the model belongs.
- `company_id`: A 16-bit company identifier assigned by the Bluetooth SIG.
- `model_id`: A 16-bit vendor-assigned model identifier.

esp_ble_mesh_model_t ***esp_ble_mesh_find_sig_model**(const *esp_ble_mesh_elem_t* **element*, uint16_t *model_id*)

Find the SIG model with the given element and Model id.

Return Pointer to the SIG Model on success, or NULL on failure which means the SIG Model is not found.

Parameters

- `element`: Element to which the model belongs.
- `model_id`: SIG model identifier.

const *esp_ble_mesh_comp_t* ***esp_ble_mesh_get_composition_data**(void)

Get the Composition data which has been registered.

Return Pointer to the Composition data on success, or NULL on failure which means the Composition data is not initialized.

esp_err_t **esp_ble_mesh_model_subscribe_group_addr**(uint16_t *element_addr*, uint16_t *company_id*, uint16_t *model_id*, uint16_t *group_addr*)

A local model of node or Provisioner subscribes a group address.

Note This function shall not be invoked before node is provisioned or Provisioner is enabled.

Return ESP_OK on success or error code otherwise.

Parameters

- `element_addr`: Unicast address of the element to which the model belongs.
- `company_id`: A 16-bit company identifier.
- `model_id`: A 16-bit model identifier.
- `group_addr`: The group address to be subscribed.

esp_err_t **esp_ble_mesh_model_unsubscribe_group_addr**(uint16_t *element_addr*, uint16_t *company_id*, uint16_t *model_id*, uint16_t *group_addr*)

A local model of node or Provisioner unsubscribes a group address.

Note This function shall not be invoked before node is provisioned or Provisioner is enabled.

Return ESP_OK on success or error code otherwise.

Parameters

- `element_addr`: Unicast address of the element to which the model belongs.
- `company_id`: A 16-bit company identifier.
- `model_id`: A 16-bit model identifier.
- `group_addr`: The subscribed group address.

const uint8_t ***esp_ble_mesh_node_get_local_net_key**(uint16_t *net_idx*)

This function is called by Node to get the local NetKey.

Return NetKey on success, or NULL on failure.

Parameters

- `net_idx`: NetKey index.

const uint8_t *esp_ble_mesh_node_get_local_app_key(uint16_t *app_idx*)

This function is called by Node to get the local AppKey.

Return AppKey on success, or NULL on failure.

Parameters

- app_idx: AppKey index.

esp_err_t esp_ble_mesh_node_add_local_net_key(const uint8_t *net_key*[16], uint16_t *net_idx*)

This function is called by Node to add a local NetKey.

Note This function can only be called after the device is provisioned.

Return ESP_OK on success or error code otherwise.

Parameters

- net_key: NetKey to be added.
- net_idx: NetKey Index.

esp_err_t esp_ble_mesh_node_add_local_app_key(const uint8_t *app_key*[16], uint16_t *net_idx*, uint16_t *app_idx*)

This function is called by Node to add a local AppKey.

Note The net_idx must be an existing one. This function can only be called after the device is provisioned.

Return ESP_OK on success or error code otherwise.

Parameters

- app_key: AppKey to be added.
- net_idx: NetKey Index.
- app_idx: AppKey Index.

esp_err_t esp_ble_mesh_node_bind_app_key_to_local_model(uint16_t *element_addr*, uint16_t *company_id*, uint16_t *model_id*, uint16_t *app_idx*)

This function is called by Node to bind AppKey to model locally.

Note If going to bind app_key with local vendor model, the company_id shall be set to 0xFFFF. This function can only be called after the device is provisioned.

Return ESP_OK on success or error code otherwise.

Parameters

- element_addr: Node local element address

- `company_id`: Node local company id
- `model_id`: Node local model id
- `app_idx`: Node local appkey index

Low Power Operation (Updating)

Header File

- bt/esp_ble_mesh/api/core/include/esp_ble_mesh_low_power_api.h

Functions

esp_err_t **esp_ble_mesh_lpn_enable**(void)

Enable BLE Mesh device LPN functionality.

Note This API enables LPN functionality. Once called, the proper Friend Request will be sent.

Return ESP_OK on success or error code otherwise.

esp_err_t **esp_ble_mesh_lpn_disable**(bool *force*)

Disable BLE Mesh device LPN functionality.

Return ESP_OK on success or error code otherwise.

Parameters

- `force`: when disabling LPN functionality, use this flag to indicate whether directly clear corresponding information or just send friend clear to disable it if friendship has already been established.

esp_err_t **esp_ble_mesh_lpn_poll**(void)

LPN tries to poll messages from the Friend Node.

Note The Friend Poll message is sent by a Low Power node to ask the Friend node to send a message that it has stored for the Low Power node. Users can call this API to send Friend Poll message manually. If this API is not invoked, the bottom layer of the Low Power node will send Friend Poll before the PollTimeout timer expires. If the corresponding Friend Update is received and MD is set to 0, which means there are no messages for the Low Power node, then the Low Power node will stop scanning.

Return ESP_OK on success or error code otherwise.

Send/Publish Messages, add Local AppKey, etc.

Header File

- bt/esp_ble_mesh/api/core/include/esp_ble_mesh_networking_api.h

Functions

esp_err_t **esp_ble_mesh_register_custom_model_callback**(*esp_ble_mesh_model_cb_t callback*)

Register BLE Mesh callback for user-defined models' operations. This callback can report the following events generated for the user-defined models:

- Call back the messages received by user-defined client and server models to the application layer;
- If users call esp_ble_mesh_server/client_model_send, this callback notifies the application layer of the send_complete event;
- If user-defined client model sends a message that requires response, and the response message is received after the timer expires, the response message will be reported to the application layer as published by a peer device;
- If the user-defined client model fails to receive the response message during a specified period of time, a timeout event will be reported to the application layer.

Note The client models (i.e. Config Client model, Health Client model, Generic Client models, Sensor Client model, Scene Client model and Lighting Client models) that have been realized internally have their specific register functions. For example, esp_ble_mesh_register_config_client_callback is the register function for Config Client Model.

Return ESP_OK on success or error code otherwise.

Parameters

- `callback`: Pointer to the callback function.

esp_err_t **esp_ble_mesh_model_msg_opcode_init**(uint8_t **data*, uint32_t *opcode*)

Add the message opcode to the beginning of the model message before sending or publishing the model message.

Note This API is only used to set the opcode of the message.

Return ESP_OK on success or error code otherwise.

Parameters

- `data`: Pointer to the message data.
- `opcode`: The message opcode.

esp_err_t **esp_ble_mesh_client_model_init**(*esp_ble_mesh_model_t* **model*)

Initialize the user-defined client model. All user-defined client models shall call this function to initialize the client model internal data. Node: Before calling this API, the op_pair_size and op_pair variabled within the user_data(defined using esp_ble_mesh_client_t_) of the client model need to be initialized.

Return ESP_OK on success or error code otherwise.

Parameters

- `model`: BLE Mesh Client model to which the message belongs.

esp_err_t **esp_ble_mesh_client_model_deinit**(*esp_ble_mesh_model_t* **model*)

De-initialize the user-defined client model.

Note This function shall be invoked before esp_ble_mesh_deinit() is called.

Return ESP_OK on success or error code otherwise.

Parameters

- `model`: Pointer of the Client model.

esp_err_t **esp_ble_mesh_server_model_send_msg**(*esp_ble_mesh_model_t* **model*, *esp_ble_mesh_msg_ctx_t* **ctx*, uint32_t *opcode*, uint16_t *length*, uint8_t **data*)

Send server model messages(such as server model status messages).

Return ESP_OK on success or error code otherwise.

Parameters

- `model`: BLE Mesh Server Model to which the message belongs.
- `ctx`: Message context, includes keys, TTL, etc.
- `opcode`: Message opcode.
- `length`: Message length (exclude the message opcode).
- `data`: Parameters of Access Payload (exclude the message opcode) to be sent.

esp_err_t **esp_ble_mesh_client_model_send_msg**(*esp_ble_mesh_model_t* **model*, *esp_ble_mesh_msg_ctx_t* **ctx*, uint32_t *opcode*, uint16_t *length*, uint8_t **data*, int32_t *msg_timeout*, bool *need_rsp*, *esp_ble_mesh_dev_role_t* *device_role*)

Send client model message (such as model get, set, etc).

Return ESP_OK on success or error code otherwise.

Parameters

- `model`: BLE Mesh Client Model to which the message belongs.
- `ctx`: Message context, includes keys, TTL, etc.
- `opcode`: Message opcode.
- `length`: Message length (exclude the message opcode).
- `data`: Parameters of the Access Payload (exclude the message opcode) to be sent.
- `msg_timeout`: Time to get response to the message (in milliseconds).
- `need_rsp`: TRUE if the opcode requires the peer device to reply, FALSE otherwise.
- `device_role`: Role of the device (Node/Provisioner) that sends the message.

esp_err_t **esp_ble_mesh_model_publish**(*esp_ble_mesh_model_t* **model*, uint32_t *opcode*, uint16_t *length*, uint8_t **data*, *esp_ble_mesh_dev_role_t device_role*)

Send a model publication message.

Note Before calling this function, the user needs to ensure that the model publication message (*esp_ble_mesh_model_pub_t::msg*) contains a valid message to be sent. And if users want to update the publishing message, this API should be called in ESP_BLE_MESH_MODEL_PUBLISH_UPDATE_EVT with the message updated.

Return ESP_OK on success or error code otherwise.

Parameters

- `model`: Mesh (client) Model publishing the message.
- `opcode`: Message opcode.
- `length`: Message length (exclude the message opcode).
- `data`: Parameters of the Access Payload (exclude the message opcode) to be sent.
- `device_role`: Role of the device (node/provisioner) publishing the message of the type esp_ble_mesh_dev_role_t.

esp_err_t **esp_ble_mesh_server_model_update_state**(*esp_ble_mesh_model_t* **model*, *esp_ble_mesh_server_state_type_t type*, *esp_ble_mesh_server_state_value_t* **value*)

Update a server model state value. If the model publication state is set properly (e.g. publish address is set to a valid address), it will publish corresponding status message.

Note Currently this API is used to update bound state value, not for all server model states.

Return ESP_OK on success or error code otherwise.

Parameters

- `model`: Server model which is going to update the state.
- `type`: Server model state type.
- `value`: Server model state value.

esp_err_t **esp_ble_mesh_node_local_reset**(void)

Reset the provisioning procedure of the local BLE Mesh node.

Note All provisioning information in this node will be deleted and the node needs to be reprovisioned. The API function esp_ble_mesh_node_prov_enable() needs to be called to start a new provisioning procedure.

Return ESP_OK on success or error code otherwise.

esp_err_t **esp_ble_mesh_provisioner_set_node_name**(uint16_t *index*, **const** char **name*)

This function is called to set the node (provisioned device) name.

Note index is obtained from the parameters of ESP_BLE_MESH_PROVISIONER_PROV_COMPLETE_EVT.

Return ESP_OK on success or error code otherwise.

Parameters

- `index`: Index of the node in the node queue.
- `name`: Name (end by '\0') to be set for the node.

const char ***esp_ble_mesh_provisioner_get_node_name**(uint16_t *index*)

This function is called to get the node (provisioned device) name.

Note index is obtained from the parameters of ESP_BLE_MESH_PROVISIONER_PROV_COMPLETE_EVT.

Return Node name on success, or NULL on failure.

Parameters

- `index`: Index of the node in the node queue.

uint16_t **esp_ble_mesh_provisioner_get_node_index**(**const** char **name*)

This function is called to get the node (provisioned device) index.

Return Node index on success, or an invalid value (0xFFFF) on failure.

Parameters

- `name`: Name of the node (end by '\0').

esp_err_t **esp_ble_mesh_provisioner_store_node_comp_data**(uint16_t *unicast_addr*, uint8_t **data*, uint16_t *length*)

This function is called to store the Composition Data of the node.

Return ESP_OK on success or error code otherwise.

Parameters

- `unicast_addr`: Element address of the node
- `data`: Pointer of Composition Data
- `length`: Length of Composition Data

esp_ble_mesh_node_t ***esp_ble_mesh_provisioner_get_node_with_uuid**(**const** uint8_t *uuid*[16])

This function is called to get the provisioned node information with the node device uuid.

Return Pointer of the node info struct or NULL on failure.

Parameters

- `uuid`: Device UUID of the node

esp_ble_mesh_node_t ***esp_ble_mesh_provisioner_get_node_with_addr**(uint16_t *unicast_addr*)

This function is called to get the provisioned node information with the node unicast address.

Return Pointer of the node info struct or NULL on failure.

Parameters

- `unicast_addr`: Unicast address of the node

esp_ble_mesh_node_t ***esp_ble_mesh_provisioner_get_node_with_name**(**const** char **name*)

This function is called to get the provisioned node information with the node name.

Return Pointer of the node info struct or NULL on failure.

Parameters

- `name`: Name of the node (end by '\0').

uint16_t **esp_ble_mesh_provisioner_get_prov_node_count**(void)

This function is called by Provisioner to get provisioned node count.

Return Number of the provisioned nodes.

const *esp_ble_mesh_node_t* ****esp_ble_mesh_provisioner_get_node_table_entry**(void)

This function is called by Provisioner to get the entry of the node table.

Note After invoking the function to get the entry of nodes, users can use the "for" loop combined with the macro CONFIG_BLE_MESH_MAX_PROV_NODES to get each node' s information. Before trying to read the node' s information, users need to check if the node exists, i.e. if the *(*esp_ble_mesh_node_t* **node) is NULL. For example: "' const *esp_ble_mesh_node_t* **entry = esp_ble_mesh_provisioner_get_node_table_entry(); for (int i = 0; i < CONFIG_BLE_MESH_MAX_PROV_NODES; i++) { const *esp_ble_mesh_node_t* *node = entry[i]; if (node) { ……} } "'

Return Pointer to the start of the node table.

esp_err_t **esp_ble_mesh_provisioner_delete_node_with_uuid**(**const** uint8_t *uuid*[16])

This function is called to delete the provisioned node information with the node device uuid.

Return ESP_OK on success or error code otherwise.

Parameters

- `uuid`: Device UUID of the node

esp_err_t **esp_ble_mesh_provisioner_delete_node_with_addr**(uint16_t *unicast_addr*)

This function is called to delete the provisioned node information with the node unicast address.

Return ESP_OK on success or error code otherwise.

Parameters

- `unicast_addr`: Unicast address of the node

esp_err_t **esp_ble_mesh_provisioner_add_local_app_key**(**const** uint8_t *app_key*[16], uint16_t *net_idx*, uint16_t *app_idx*)

This function is called to add a local AppKey for Provisioner.

Note app_key: If set to NULL, app_key will be generated internally. net_idx: Should be an existing one. app_idx: If it is going to be generated internally, it should be set to 0xFFFF, and the new app_idx will be reported via an event.

Return ESP_OK on success or error code otherwise.

Parameters

- `app_key`: The app key to be set for the local BLE Mesh stack.
- `net_idx`: The network key index.
- `app_idx`: The app key index.

esp_err_t **esp_ble_mesh_provisioner_update_local_app_key**(**const** uint8_t *app_key*[16], uint16_t *net_idx*, uint16_t *app_idx*)

This function is used to update a local AppKey for Provisioner.

Return ESP_OK on success or error code otherwise.

Parameters

- `app_key`: Value of the AppKey.
- `net_idx`: Corresponding NetKey Index.
- `app_idx`: The AppKey Index

`const` uint8_t *`esp_ble_mesh_provisioner_get_local_app_key`(uint16_t *net_idx*, uint16_t *app_idx*)

This function is called by Provisioner to get the local app key value.

Return App key on success, or NULL on failure.

Parameters

- `net_idx`: Network key index.
- `app_idx`: Application key index.

esp_err_t `esp_ble_mesh_provisioner_bind_app_key_to_local_model`(uint16_t *element_addr*, uint16_t *app_idx*, uint16_t *model_id*, uint16_t *company_id*)

This function is called by Provisioner to bind own model with proper app key.

Note company_id: If going to bind app_key with local vendor model, company_id should be set to 0xFFFF.

Return ESP_OK on success or error code otherwise.

Parameters

- `element_addr`: Provisioner local element address
- `app_idx`: Provisioner local appkey index
- `model_id`: Provisioner local model id
- `company_id`: Provisioner local company id

esp_err_t `esp_ble_mesh_provisioner_add_local_net_key`(`const` uint8_t *net_key*[16], uint16_t *net_idx*)

This function is called by Provisioner to add local network key.

Note net_key: If set to NULL, net_key will be generated internally. net_idx: If it is going to be generated internally, it should be set to 0xFFFF, and the new net_idx will be reported via an event.

Return ESP_OK on success or error code otherwise.

Parameters

- `net_key`: The network key to be added to the Provisioner local BLE Mesh stack.
- `net_idx`: The network key index.

esp_err_t **esp_ble_mesh_provisioner_update_local_net_key**(const uint8_t *net_key*[16], uint16_t *net_idx*)

This function is called by Provisioner to update a local network key.

Return ESP_OK on success or error code otherwise.

Parameters

- `net_key`: Value of the NetKey.
- `net_idx`: The NetKey Index.

const uint8_t ***esp_ble_mesh_provisioner_get_local_net_key**(uint16_t *net_idx*)

This function is called by Provisioner to get the local network key value.

Return Network key on success, or NULL on failure.

Parameters

- `net_idx`: Network key index.

esp_err_t **esp_ble_mesh_provisioner_recv_heartbeat**(bool *enable*)

This function is called by Provisioner to enable or disable receiving heartbeat messages.

Note If enabling receiving heartbeat message successfully, the filter will be an empty rejectlist by default, which means all heartbeat messages received by the Provisioner will be reported to the application layer.

Return ESP_OK on success or error code otherwise.

Parameters

- `enable`: Enable or disable receiving heartbeat messages.

esp_err_t **esp_ble_mesh_provisioner_set_heartbeat_filter_type**(uint8_t *type*)

This function is called by Provisioner to set the heartbeat filter type.

Note 1. If the filter type is not the same with the current value, then all the filter entries will be cleaned.

1. If the previous type is rejectlist, and changed to acceptlist, then the filter will be an empty acceptlist, which means no heartbeat messages will be reported. Users need to add SRC or DST into the filter entry, then heartbeat messages from the SRC or to the DST will be reported.

Return ESP_OK on success or error code otherwise.

Parameters

- `type`: Heartbeat filter type (acceptlist or rejectlist).

esp_err_t **esp_ble_mesh_provisioner_set_heartbeat_filter_info**(uint8_t *op*, *esp_ble_mesh_heartbeat_filter_info_t* **info*)

This function is called by Provisioner to add or remove a heartbeat filter entry.

1. If the operation is "REMOVE", the "hb_src" can be set to the SRC (can only be a unicast address) of heartbeat messages, and the "hb_dst" can be set to the DST (unicast address or group address), at least one of them needs to be set.
   - The filter entry with the same SRC or DST will be removed.

Note 1. If the operation is "ADD", the "hb_src" can be set to the SRC (can only be a unicast address) of heartbeat messages, and the "hb_dst" can be set to the DST (unicast address or group address), at least one of them needs to be set.

- If only one of them is set, the filter entry will only use the configured SRC or DST to filter heartbeat messages.
- If both of them are set, the SRC and DST will both be used to decide if a heartbeat message will be handled.
- If SRC or DST already exists in some filter entry, then the corresponding entry will be cleaned firstly, then a new entry will be allocated to store the information.

Return ESP_OK on success or error code otherwise.

Parameters

- `op`: Add or REMOVE
- `info`: Heartbeat filter entry information, including: hb_src - Heartbeat source address; hb_dst - Heartbeat destination address;

esp_err_t **esp_ble_mesh_provisioner_direct_erase_settings**(void)

This function is called by Provisioner to directly erase the mesh information from nvs namespace.

Note This function can be invoked when the mesh stack is not initialized or has been de-initialized.

Return ESP_OK on success or error code otherwise.

esp_err_t **esp_ble_mesh_provisioner_open_settings_with_index**(uint8_t *index*)

This function is called by Provisioner to open a nvs namespace for storing mesh information.

Note Before open another nvs namespace, the previously opened nvs namespace must be closed firstly.

Return ESP_OK on success or error code otherwise.

Parameters

- `index`: Settings index.

esp_err_t **esp_ble_mesh_provisioner_open_settings_with_uid**(**const** char **uid*)

This function is called by Provisioner to open a nvs namespace for storing mesh information.

Note Before open another nvs namespace, the previously opened nvs namespace must be closed firstly.

Return ESP_OK on success or error code otherwise.

Parameters

- `uid`: Settings user id.

esp_err_t **esp_ble_mesh_provisioner_close_settings_with_index**(uint8_t *index*, bool *erase*)

This function is called by Provisioner to close a nvs namespace which is opened previously for storing mesh information.

Note 1. Before closing the nvs namespace, it must be open.

1. When the function is invoked, the Provisioner functionality will be disabled firstly, and: a) If the "erase" flag is set to false, the mesh information will be cleaned (e.g. removing NetKey, AppKey, nodes, etc) from the mesh stack. b) If the "erase" flag is set to true, the mesh information stored in the nvs namespace will also be erased besides been cleaned from the mesh stack.
2. If Provisioner tries to work properly again, we can invoke the open function to open a new nvs namespace or a previously added one, and restore the mesh information from it if not erased.
3. The working process shall be as following: a) Open settings A b) Start to provision and control nodes c) Close settings A d) Open settings B e) Start to provision and control other nodes f) Close settings B g) ……

Return ESP_OK on success or error code otherwise.

Parameters

- `index`: Settings index.
- `erase`: Indicate if erasing mesh information.

esp_err_t **esp_ble_mesh_provisioner_close_settings_with_uid**(**const** char **uid*, bool *erase*)

This function is called by Provisioner to close a nvs namespace which is opened previously for storing mesh information.

Note 1. Before closing the nvs namespace, it must be open.

1. When the function is invoked, the Provisioner functionality will be disabled firstly, and: a) If the "erase" flag is set to false, the mesh information will be cleaned (e.g. removing NetKey, AppKey, nodes, etc) from the mesh stack. b) If the "erase" flag is set to true, the mesh information stored in the nvs namespace will also be erased besides been cleaned from the mesh stack.
2. If Provisioner tries to work properly again, we can invoke the open function to open a new nvs namespace or a previously added one, and restore the mesh information from it if not erased.
3. The working process shall be as following: a) Open settings A b) Start to provision and control nodes c) Close settings A d) Open settings B e) Start to provision and control other nodes f) Close settings B g) ……

Return ESP_OK on success or error code otherwise.

Parameters

- `uid`: Settings user id.
- `erase`: Indicate if erasing mesh information.

esp_err_t **esp_ble_mesh_provisioner_delete_settings_with_index**(uint8_t *index*)

This function is called by Provisioner to erase the mesh information and settings user id from a nvs namespace.

Note When this function is called, the nvs namespace must not be open. This function is used to erase the mesh information and settings user id which are not used currently.

Return ESP_OK on success or error code otherwise.

Parameters

- `index`: Settings index.

esp_err_t **esp_ble_mesh_provisioner_delete_settings_with_uid**(**const** char **uid*)

This function is called by Provisioner to erase the mesh information and settings user id from a nvs namespace.

Note When this function is called, the nvs namespace must not be open. This function is used to erase the mesh information and settings user id which are not used currently.

Return ESP_OK on success or error code otherwise.

Parameters

- `uid`: Settings user id.

const char ***esp_ble_mesh_provisioner_get_settings_uid**(uint8_t *index*)

This function is called by Provisioner to get settings user id.

Return Setting user id on success or NULL on failure.

Parameters

- `index`: Settings index.

uint8_t **esp_ble_mesh_provisioner_get_settings_index**(**const** char *_uid_)

This function is called by Provisioner to get settings index.

Return Settings index.

Parameters

- `uid`: Settings user id.

uint8_t **esp_ble_mesh_provisioner_get_free_settings_count**(void)

This function is called by Provisioner to get the number of free settings user id.

Return Number of free settings user id.

const uint8_t ***esp_ble_mesh_get_fast_prov_app_key**(uint16_t *net_idx*, uint16_t *app_idx*)

This function is called to get fast provisioning application key.

Return Application key on success, or NULL on failure.

Parameters

- `net_idx`: Network key index.
- `app_idx`: Application key index.

Type Definitions

typedef void (***esp_ble_mesh_model_cb_t**)(*esp_ble_mesh_model_cb_event_t* event, *esp_ble_mesh_model_cb_param_t* *param)

: event, event code of user-defined model events; param, parameters of user-defined model events

ESP-BLE-MESH Node/Provisioner Provisioning

Header File

- bt/esp_ble_mesh/api/core/include/esp_ble_mesh_provisioning_api.h

Functions

esp_err_t **esp_ble_mesh_register_prov_callback**(*esp_ble_mesh_prov_cb_t callback*)

Register BLE Mesh provisioning callback.

Return ESP_OK on success or error code otherwise.

Parameters

- `callback`: Pointer to the callback function.

bool **esp_ble_mesh_node_is_provisioned**(void)

Check if a device has been provisioned.

Return TRUE if the device is provisioned, FALSE if the device is unprovisioned.

esp_err_t **esp_ble_mesh_node_prov_enable**(*esp_ble_mesh_prov_bearer_t bearers*)

Enable specific provisioning bearers to get the device ready for provisioning.

Note PB-ADV: send unprovisioned device beacon. PB-GATT: send connectable advertising packets.

Return ESP_OK on success or error code otherwise.

Parameters

- `bearers`: Bit-wise OR of provisioning bearers.

esp_err_t **esp_ble_mesh_node_prov_disable**(*esp_ble_mesh_prov_bearer_t bearers*)

Disable specific provisioning bearers to make a device inaccessible for provisioning.

Return ESP_OK on success or error code otherwise.

Parameters

- `bearers`: Bit-wise OR of provisioning bearers.

esp_err_t **esp_ble_mesh_node_set_oob_pub_key**(uint8_t *pub_key_x*[32], uint8_t *pub_key_y*[32], uint8_t *private_key*[32])

Unprovisioned device set own oob public key & private key pair.

Return ESP_OK on success or error code otherwise.

Parameters

- `pub_key_x`: Unprovisioned device' s Public Key X
- `pub_key_y`: Unprovisioned device' s Public Key Y
- `private_key`: Unprovisioned device' s Private Key

esp_err_t **esp_ble_mesh_node_input_number**(uint32_t *number*)

Provide provisioning input OOB number.

Note This is intended to be called if the user has received ESP_BLE_MESH_NODE_PROV_INPUT_EVT with ESP_BLE_MESH_ENTER_NUMBER as the action.

Return ESP_OK on success or error code otherwise.

Parameters

- `number`: Number input by device.

esp_err_t **esp_ble_mesh_node_input_string**(**const** char *_string_)

Provide provisioning input OOB string.

Note This is intended to be called if the user has received ESP_BLE_MESH_NODE_PROV_INPUT_EVT with ESP_BLE_MESH_ENTER_STRING as the action.

Return ESP_OK on success or error code otherwise.

Parameters

- `string`: String input by device.

esp_err_t **esp_ble_mesh_set_unprovisioned_device_name**(**const** char *_name_)

Using this function, an unprovisioned device can set its own device name, which will be broadcasted in its advertising data.

Note This API applicable to PB-GATT mode only by setting the name to the scan response data, it doesn't apply to PB-ADV mode.

Return ESP_OK on success or error code otherwise.

Parameters

- `name`: Unprovisioned device name

esp_err_t **esp_ble_mesh_provisioner_read_oob_pub_key**(uint8_t *link_idx*, uint8_t *pub_key_x*[32], uint8_t *pub_key_y*[32])

Provisioner inputs unprovisioned device's oob public key.

Return ESP_OK on success or error code otherwise.

Parameters

- `link_idx`: The provisioning link index
- `pub_key_x`: Unprovisioned device's Public Key X
- `pub_key_y`: Unprovisioned device's Public Key Y

esp_err_t **esp_ble_mesh_provisioner_input_string**(**const** char *_string_, uint8_t *link_idx*)

Provide provisioning input OOB string.

This is intended to be called after the *esp_ble_mesh_prov_t* prov_input_num callback has been called with ESP_BLE_MESH_ENTER_STRING as the action.

Return ESP_OK on success or error code otherwise.

Parameters

- `string`: String input by Provisioner.
- `link_idx`: The provisioning link index.

esp_err_t **esp_ble_mesh_provisioner_input_number**(uint32_t *number*, uint8_t *link_idx*)

Provide provisioning input OOB number.

This is intended to be called after the *esp_ble_mesh_prov_t* prov_input_num callback has been called with ESP_BLE_MESH_ENTER_NUMBER as the action.

Return ESP_OK on success or error code otherwise.

Parameters

- `number`: Number input by Provisioner.
- `link_idx`: The provisioning link index.

esp_err_t **esp_ble_mesh_provisioner_prov_enable**(*esp_ble_mesh_prov_bearer_t* *bearers*)

Enable one or more provisioning bearers.

Note PB-ADV: Enable BLE scan. PB-GATT: Initialize corresponding BLE Mesh Proxy info.

Return ESP_OK on success or error code otherwise.

Parameters

- `bearers`: Bit-wise OR of provisioning bearers.

esp_err_t **esp_ble_mesh_provisioner_prov_disable**(*esp_ble_mesh_prov_bearer_t* *bearers*)

Disable one or more provisioning bearers.

Note PB-ADV: Disable BLE scan. PB-GATT: Break any existing BLE Mesh Provisioning connections.

Return ESP_OK on success or error code otherwise.

Parameters

- `bearers`: Bit-wise OR of provisioning bearers.

esp_err_t **esp_ble_mesh_provisioner_add_unprov_dev**(*esp_ble_mesh_unprov_dev_add_t* **add_dev*, *esp_ble_mesh_dev_add_flag_t* *flags*)

Add unprovisioned device info to the unprov_dev queue.

Return ESP_OK on success or error code otherwise.

Note : 1. Currently address type only supports public address and static random address.

1. If device UUID and/or device address as well as address type already exist in the device queue, but the bearer is different from the existing one, add operation will also be successful and it will update the provision bearer supported by the device.
2. For example, if the Provisioner wants to add an unprovisioned device info before receiving its unprovisioned device beacon or Mesh Provisioning advertising packets, the Provisioner can use this API to add the device info with each one or both of device UUID and device address added. When the Provisioner gets the device' s advertising packets, it will start provisioning the device internally.
   - In this situation, the Provisioner can set bearers with each one or both of ESP_BLE_MESH_PROV_ADV and ESP_BLE_MESH_PROV_GATT enabled, and cannot set flags with ADD_DEV_START_PROV_NOW_FLAG enabled.
3. Another example is when the Provisioner receives the unprovisioned device' s beacon or Mesh Provisioning advertising packets, the advertising packets will be reported on to the application layer using the callback registered by the function esp_ble_mesh_register_prov_callback. And in the callback, the Provisioner can call this API to start provisioning the device.
   - If the Provisioner uses PB-ADV to provision, either one or both of device UUID and device address can be added, bearers shall be set with ESP_BLE_MESH_PROV_ADV enabled and the flags shall be set with ADD_DEV_START_PROV_NOW_FLAG enabled.
   - If the Provisioner uses PB-GATT to provision, both the device UUID and device address need to be added, bearers shall be set with ESP_BLE_MESH_PROV_GATT enabled, and the flags shall be set with ADD_DEV_START_PROV_NOW_FLAG enabled.
   - If the Provisioner just wants to store the unprovisioned device info when receiving its advertising packets and start to provision it the next time (e.g. after receiving its advertising packets again), then it can add the device info with either one or both of device UUID and device address included. Bearers can be set with either one or both of ESP_BLE_MESH_PROV_ADV and ESP_BLE_MESH_PROV_GATT enabled (recommend to enable the bearer which will receive its advertising packets, because if the other bearer is enabled, the Provisioner is not aware if the device supports the bearer), and flags cannot be set with ADD_DEV_START_PROV_NOW_FLAG enabled.
   - Note: ESP_BLE_MESH_PROV_ADV, ESP_BLE_MESH_PROV_GATT and ADD_DEV_START_PROV_NOW_FLAG can not be enabled at the same time.

Parameters

- `add_dev`: Pointer to a struct containing the device information
- `flags`: Flags indicate several operations on the device information
  - Remove device information from queue after device has been provisioned (BIT0)

- Start provisioning immediately after device is added to queue (BIT1)
- Device can be removed if device queue is full (BIT2)

esp_err_t **esp_ble_mesh_provisioner_prov_device_with_addr**(**const** uint8_t *uuid*[16], *esp_ble_mesh_bd_addr_t* *addr*, *esp_ble_mesh_addr_type_t* *addr_type*, *esp_ble_mesh_prov_bearer_t* *bearer*, uint16_t *oob_info*, uint16_t *unicast_addr*)

Provision an unprovisioned device with fixed unicast address.

Return Zero on success or (negative) error code otherwise.

Note : 1. Currently address type only supports public address and static random address.

1. Bearer must be equal to ESP_BLE_MESH_PROV_ADV or ESP_BLE_MESH_PROV_GATT, since Provisioner will start to provision a device immediately once this function is invked. And the input bearer must be identical with the one within the parameters of the ESP_BLE_MESH_PROVISIONER_RECV_UNPROV_ADV_PKT_EVT event.
2. If this function is used by a Provisioner to provision devices, the application should take care of the assigned unicast address and avoid overlap of the unicast addresses of different nodes.
3. Recommend to use only one of the functions "esp_ble_mesh_provisioner_add_unprov_dev" and "esp_ble_mesh_provisioner_prov_device_with_addr" by a Provisioner.

Parameters

- `uuid`: Device UUID of the unprovisioned device
- `addr`: Device address of the unprovisioned device
- `addr_type`: Device address type of the unprovisioned device
- `bearer`: Provisioning bearer going to be used by Provisioner
- `oob_info`: OOB info of the unprovisioned device
- `unicast_addr`: Unicast address going to be allocated for the unprovisioned device

esp_err_t **esp_ble_mesh_provisioner_delete_dev**(*esp_ble_mesh_device_delete_t* **del_dev*)

Delete device from queue, and reset current provisioning link with the device.

Note If the device is in the queue, remove it from the queue; if the device is being provisioned, terminate the provisioning procedure. Either one of the device address or device UUID can be used as input.

Return ESP_OK on success or error code otherwise.

Parameters

- `del_dev`: Pointer to a struct containing the device information.

esp_err_t **esp_ble_mesh_provisioner_set_dev_uuid_match**(**const** uint8_t **match_val*, uint8_t *match_len*, uint8_t *offset*, bool *prov_after_match*)

This function is called by Provisioner to set the part of the device UUID to be compared before starting to provision.

Return ESP_OK on success or error code otherwise.

Parameters

- `match_val`: Value to be compared with the part of the device UUID.
- `match_len`: Length of the compared match value.
- `offset`: Offset of the device UUID to be compared (based on zero).
- `prov_after_match`: Flag used to indicate whether provisioner should start to provision the device immediately if the part of the UUID matches.

esp_err_t **esp_ble_mesh_provisioner_set_prov_data_info**(*esp_ble_mesh_prov_data_info_t* **prov_data_info*)

This function is called by Provisioner to set provisioning data information before starting to provision.

Return ESP_OK on success or error code otherwise.

Parameters

- `prov_data_info`: Pointer to a struct containing net_idx or flags or iv_index.

esp_err_t **esp_ble_mesh_provisioner_set_static_oob_value**(**const** uint8_t **value*, uint8_t *length*)

This function is called by Provisioner to set static oob value used for provisioning.

Return ESP_OK on success or error code otherwise.

Parameters

- `value`: Pointer to the static oob value.
- `length`: Length of the static oob value.

esp_err_t **esp_ble_mesh_provisioner_set_primary_elem_addr**(uint16_t *addr*)

This function is called by Provisioner to set own Primary element address.

Note This API must be invoked when BLE Mesh initialization is completed successfully, and can be invoked before Provisioner functionality is enabled. Once this API is invoked successfully, the prov_unicast_addr value in the struct *esp_ble_mesh_prov_t* will be ignored, and Provisioner

will use this address as its own primary element address. And if the unicast address going to assigned for the next unprovisioned device is smaller than the input address + element number of Provisioner, then the address for the next unprovisioned device will be recalculated internally.

Return ESP_OK on success or error code otherwise.

Parameters

- `addr`: Unicast address of the Primary element of Provisioner.

esp_err_t **esp_ble_mesh_set_fast_prov_info**(*esp_ble_mesh_fast_prov_info_t* **fast_prov_info*)

This function is called to set provisioning data information before starting fast provisioning.

Return ESP_OK on success or error code otherwise.

Parameters

- `fast_prov_info`: Pointer to a struct containing unicast address range, net_idx, etc.

esp_err_t **esp_ble_mesh_set_fast_prov_action**(*esp_ble_mesh_fast_prov_action_t* *action*)

This function is called to start/suspend/exit fast provisioning.

Return ESP_OK on success or error code otherwise.

Parameters

- `action`: fast provisioning action (i.e. enter, suspend, exit).

Type Definitions

typedef void (***esp_ble_mesh_prov_cb_t**)(*esp_ble_mesh_prov_cb_event_t* event, *esp_ble_mesh_prov_cb_param_t* *param)

: event, event code of provisioning events; param, parameters of provisioning events

typedef void (***esp_ble_mesh_prov_adv_cb_t**)(**const** *esp_ble_mesh_bd_addr_t* addr, **const** *esp_ble_mesh_addr_type_t* addr_type, **const** uint8_t adv_type, **const** uint8_t *dev_uuid, uint16_t oob_info, *esp_ble_mesh_prov_bearer_t* bearer)

Callback for Provisioner that received advertising packets from unprovisioned devices which are not in the unprovisioned device queue.

Report on the unprovisioned device beacon and mesh provisioning service adv data to application.

Parameters

- `addr`: Pointer to the unprovisioned device address.
- `addr_type`: Unprovisioned device address type.
- `adv_type`: Adv packet type(ADV_IND or ADV_NONCONN_IND).

- `dev_uuid`: Unprovisioned device UUID pointer.
- `oob_info`: OOB information of the unprovisioned device.
- `bearer`: Adv packet received from PB-GATT or PB-ADV bearer.

ESP-BLE-MESH GATT Proxy Server

Header File

- bt/esp_ble_mesh/api/core/include/esp_ble_mesh_proxy_api.h

Functions

esp_err_t **esp_ble_mesh_proxy_identity_enable**(void)

Enable advertising with Node Identity.

Note This API requires that GATT Proxy support be enabled. Once called, each subnet starts advertising using Node Identity for the next 60 seconds, and after 60s Network ID will be advertised. Under normal conditions, the BLE Mesh Proxy Node Identity and Network ID advertising will be enabled automatically by BLE Mesh stack after the device is provisioned.

Return ESP_OK on success or error code otherwise.

esp_err_t **esp_ble_mesh_proxy_gatt_enable**(void)

Enable BLE Mesh GATT Proxy Service.

Return ESP_OK on success or error code otherwise.

esp_err_t **esp_ble_mesh_proxy_gatt_disable**(void)

Disconnect the BLE Mesh GATT Proxy connection if there is any, and disable the BLE Mesh GATT Proxy Service.

Return ESP_OK on success or error code otherwise.

esp_err_t **esp_ble_mesh_proxy_client_connect**(*esp_ble_mesh_bd_addr_t* *addr*, *esp_ble_mesh_addr_type_t* *addr_type*, uint16_t *net_idx*)

Proxy Client creates a connection with the Proxy Server.

Return ESP_OK on success or error code otherwise.

Parameters

- `addr`: Device address of the Proxy Server.
- `addr_type`: Device address type(public or static random).

- `net_idx`: NetKey Index related with Network ID in the Mesh Proxy advertising packet.

esp_err_t **esp_ble_mesh_proxy_client_disconnect**(uint8_t *conn_handle*)

Proxy Client terminates a connection with the Proxy Server.

Return ESP_OK on success or error code otherwise.

Parameters

- `conn_handle`: Proxy connection handle.

esp_err_t **esp_ble_mesh_proxy_client_set_filter_type**(uint8_t *conn_handle*, uint16_t *net_idx*, *esp_ble_mesh_proxy_filter_type_t* *filter_type*)

Proxy Client sets the filter type of the Proxy Server.

Return ESP_OK on success or error code otherwise.

Parameters

- `conn_handle`: Proxy connection handle.
- `net_idx`: Corresponding NetKey Index.
- `filter_type`: whitelist or blacklist.

esp_err_t **esp_ble_mesh_proxy_client_add_filter_addr**(uint8_t *conn_handle*, uint16_t *net_idx*, uint16_t **addr*, uint16_t *addr_num*)

Proxy Client adds address to the Proxy Server filter list.

Return ESP_OK on success or error code otherwise.

Parameters

- `conn_handle`: Proxy connection handle.
- `net_idx`: Corresponding NetKey Index.
- `addr`: Pointer to the filter address.
- `addr_num`: Number of the filter address.

esp_err_t **esp_ble_mesh_proxy_client_remove_filter_addr**(uint8_t *conn_handle*, uint16_t *net_idx*, uint16_t **addr*, uint16_t *addr_num*)

Proxy Client removes address from the Proxy Server filter list.

Return ESP_OK on success or error code otherwise.

Parameters

- `conn_handle`: Proxy connection handle.
- `net_idx`: Corresponding NetKey Index.
- `addr`: Pointer to the filter address.
- `addr_num`: Number of the filter address.

ESP-BLE-MESH Models API Reference

This section contains ESP-BLE-MESH Model related APIs, event types, event parameters, etc.

There are six categories of models:

- *Configuration Client/Server Models*
- *Health Client/Server Models*
- *Generic Client/Server Models*
- *Sensor Client/Server Models*
- *Time and Scenes Client/Server Models*
- *Lighting Client/Server Models*

注解: Definitions related to Server Models are being updated, and will be released soon.

Configuration Client/Server Models

Header File

- bt/esp_ble_mesh/api/models/include/esp_ble_mesh_config_model_api.h

Functions

esp_err_t **esp_ble_mesh_register_config_client_callback**(*esp_ble_mesh_cfg_client_cb_t callback*)

Register BLE Mesh Config Client Model callback.

Return ESP_OK on success or error code otherwise.

Parameters

- `callback`: Pointer to the callback function.

esp_err_t **esp_ble_mesh_register_config_server_callback**(*esp_ble_mesh_cfg_server_cb_t callback*)

Register BLE Mesh Config Server Model callback.

Return ESP_OK on success or error code otherwise.

Parameters

- `callback`: Pointer to the callback function.

esp_err_t **esp_ble_mesh_config_client_get_state**(*esp_ble_mesh_client_common_param_t* **params*, *esp_ble_mesh_cfg_client_get_state_t* **get_state*)

Get the value of Config Server Model states using the Config Client Model get messages.

Note If you want to find the opcodes and corresponding meanings accepted by this API, please refer to esp_ble_mesh_opcode_config_client_get_t in esp_ble_mesh_defs.h

Return ESP_OK on success or error code otherwise.

Parameters

- `params`: Pointer to BLE Mesh common client parameters.
- `get_state`: Pointer to a union, each kind of opcode corresponds to one structure inside. Shall not be set to NULL.

esp_err_t **esp_ble_mesh_config_client_set_state**(*esp_ble_mesh_client_common_param_t* **params*, *esp_ble_mesh_cfg_client_set_state_t* **set_state*)

Set the value of the Configuration Server Model states using the Config Client Model set messages.

Note If you want to find the opcodes and corresponding meanings accepted by this API, please refer to esp_ble_mesh_opcode_config_client_set_t in esp_ble_mesh_defs.h

Return ESP_OK on success or error code otherwise.

Parameters

- `params`: Pointer to BLE Mesh common client parameters.
- `set_state`: Pointer to a union, each kind of opcode corresponds to one structure inside. Shall not be set to NULL.

Unions

union esp_ble_mesh_cfg_client_get_state_t

#include <esp_ble_mesh_config_model_api.h> For ESP_BLE_MESH_MODEL_OP_BEACON_GET ESP_BLE_MESH_MODEL_OP_COMPOSITION_DATA_GET ESP_BLE_MESH_MODEL_OP_DEFAULT_T ESP_BLE_MESH_MODEL_OP_GATT_PROXY_GET ESP_BLE_MESH_MODEL_OP_RELAY_GET

ESP_BLE_MESH_MODEL_OP_MODEL_PUB_GET ESP_BLE_MESH_MODEL_OP_FRIEND_GET ESP_BLE_MESH_MODEL_OP_HEARTBEAT_PUB_GET ESP_BLE_MESH_MODEL_OP_HEARTBEAT_S the get_state parameter in the esp_ble_mesh_config_client_get_state function should not be set to NULL.

Public Members

esp_ble_mesh_cfg_model_pub_get_t **model_pub_get**

For ESP_BLE_MESH_MODEL_OP_MODEL_PUB_GET.

esp_ble_mesh_cfg_composition_data_get_t **comp_data_get**

For ESP_BLE_MESH_MODEL_OP_COMPOSITION_DATA_GET.

esp_ble_mesh_cfg_sig_model_sub_get_t **sig_model_sub_get**

For ESP_BLE_MESH_MODEL_OP_SIG_MODEL_SUB_GET

esp_ble_mesh_cfg_vnd_model_sub_get_t **vnd_model_sub_get**

For ESP_BLE_MESH_MODEL_OP_VENDOR_MODEL_SUB_GET

esp_ble_mesh_cfg_app_key_get_t **app_key_get**

For ESP_BLE_MESH_MODEL_OP_APP_KEY_GET.

esp_ble_mesh_cfg_node_identity_get_t **node_identity_get**

For ESP_BLE_MESH_MODEL_OP_NODE_IDENTITY_GET.

esp_ble_mesh_cfg_sig_model_app_get_t **sig_model_app_get**

For ESP_BLE_MESH_MODEL_OP_SIG_MODEL_APP_GET

esp_ble_mesh_cfg_vnd_model_app_get_t **vnd_model_app_get**

For ESP_BLE_MESH_MODEL_OP_VENDOR_MODEL_APP_GET

esp_ble_mesh_cfg_kr_phase_get_t **kr_phase_get**

For ESP_BLE_MESH_MODEL_OP_KEY_REFRESH_PHASE_GET

esp_ble_mesh_cfg_lpn_polltimeout_get_t **lpn_pollto_get**

For ESP_BLE_MESH_MODEL_OP_LPN_POLLTIMEOUT_GET

union esp_ble_mesh_cfg_client_set_state_t

#include <esp_ble_mesh_config_model_api.h> For ESP_BLE_MESH_MODEL_OP_BEACON_SET ESP_BLE_MESH_MODEL_OP_DEFAULT_TTL_SET ESP_BLE_MESH_MODEL_OP_GATT_PROXY_SET ESP_BLE_MESH_MODEL_OP_RELAY_SET ESP_BLE_MESH_MODEL_OP_MODEL_PUB_SET ESP_BLE_MESH_MODEL_OP_MODEL_SUB_ADD ESP_BLE_MESH_MODEL_OP_MODEL_SUB_VIRTU ESP_BLE_MESH_MODEL_OP_MODEL_SUB_DELETE ESP_BLE_MESH_MODEL_OP_MODEL_SUB_VI ESP_BLE_MESH_MODEL_OP_MODEL_SUB_OVERWRITE ESP_BLE_MESH_MODEL_OP_MODEL_SUB ESP_BLE_MESH_MODEL_OP_NET_KEY_ADD ESP_BLE_MESH_MODEL_OP_APP_KEY_ADD ESP_BLE_MESH_MODEL_OP_MODEL_APP_BIND ESP_BLE_MESH_MODEL_OP_NODE_RESET ESP_BLE_MESH_MODEL_OP_FRIEND_SET ESP_BLE_MESH_MODEL_OP_HEARTBEAT_PUB_SET

ESP_BLE_MESH_MODEL_OP_HEARTBEAT_SUB_SET the set_state parameter in the esp_ble_mesh_config_client_set_state function should not be set to NULL.

Public Members

esp_ble_mesh_cfg_beacon_set_t **beacon_set**

For ESP_BLE_MESH_MODEL_OP_BEACON_SET

esp_ble_mesh_cfg_default_ttl_set_t **default_ttl_set**

For ESP_BLE_MESH_MODEL_OP_DEFAULT_TTL_SET

esp_ble_mesh_cfg_friend_set_t **friend_set**

For ESP_BLE_MESH_MODEL_OP_FRIEND_SET

esp_ble_mesh_cfg_gatt_proxy_set_t **gatt_proxy_set**

For ESP_BLE_MESH_MODEL_OP_GATT_PROXY_SET

esp_ble_mesh_cfg_relay_set_t **relay_set**

For ESP_BLE_MESH_MODEL_OP_RELAY_SET

esp_ble_mesh_cfg_net_key_add_t **net_key_add**

For ESP_BLE_MESH_MODEL_OP_NET_KEY_ADD

esp_ble_mesh_cfg_app_key_add_t **app_key_add**

For ESP_BLE_MESH_MODEL_OP_APP_KEY_ADD

esp_ble_mesh_cfg_model_app_bind_t **model_app_bind**

For ESP_BLE_MESH_MODEL_OP_MODEL_APP_BIND

esp_ble_mesh_cfg_model_pub_set_t **model_pub_set**

For ESP_BLE_MESH_MODEL_OP_MODEL_PUB_SET

esp_ble_mesh_cfg_model_sub_add_t **model_sub_add**

For ESP_BLE_MESH_MODEL_OP_MODEL_SUB_ADD

esp_ble_mesh_cfg_model_sub_delete_t **model_sub_delete**

For ESP_BLE_MESH_MODEL_OP_MODEL_SUB_DELETE

esp_ble_mesh_cfg_model_sub_overwrite_t **model_sub_overwrite**

For ESP_BLE_MESH_MODEL_OP_MODEL_SUB_OVERWRITE

esp_ble_mesh_cfg_model_sub_va_add_t **model_sub_va_add**

For ESP_BLE_MESH_MODEL_OP_MODEL_SUB_VIRTUAL_ADDR_ADD

esp_ble_mesh_cfg_model_sub_va_delete_t **model_sub_va_delete**

For ESP_BLE_MESH_MODEL_OP_MODEL_SUB_VIRTUAL_ADDR_DELETE

esp_ble_mesh_cfg_model_sub_va_overwrite_t **model_sub_va_overwrite**

For ESP_BLE_MESH_MODEL_OP_MODEL_SUB_VIRTUAL_ADDR_OVERWRITE

esp_ble_mesh_cfg_heartbeat_pub_set_t **heartbeat_pub_set**

For ESP_BLE_MESH_MODEL_OP_HEARTBEAT_PUB_SET

esp_ble_mesh_cfg_heartbeat_sub_set_t **heartbeat_sub_set**

For ESP_BLE_MESH_MODEL_OP_HEARTBEAT_SUB_SET

esp_ble_mesh_cfg_model_pub_va_set_t **model_pub_va_set**

For ESP_BLE_MESH_MODEL_OP_MODEL_PUB_VIRTUAL_ADDR_SET

esp_ble_mesh_cfg_model_sub_delete_all_t **model_sub_delete_all**

For ESP_BLE_MESH_MODEL_OP_MODEL_SUB_DELETE_ALL

esp_ble_mesh_cfg_net_key_update_t **net_key_update**

For ESP_BLE_MESH_MODEL_OP_NET_KEY_UPDATE

esp_ble_mesh_cfg_net_key_delete_t **net_key_delete**

For ESP_BLE_MESH_MODEL_OP_NET_KEY_DELETE

esp_ble_mesh_cfg_app_key_update_t **app_key_update**

For ESP_BLE_MESH_MODEL_OP_APP_KEY_UPDATE

esp_ble_mesh_cfg_app_key_delete_t **app_key_delete**

For ESP_BLE_MESH_MODEL_OP_APP_KEY_DELETE

esp_ble_mesh_cfg_node_identity_set_t **node_identity_set**

For ESP_BLE_MESH_MODEL_OP_NODE_IDENTITY_SET

esp_ble_mesh_cfg_model_app_unbind_t **model_app_unbind**

For ESP_BLE_MESH_MODEL_OP_MODEL_APP_UNBIND

esp_ble_mesh_cfg_kr_phase_set_t **kr_phase_set**

For ESP_BLE_MESH_MODEL_OP_KEY_REFRESH_PHASE_SET

esp_ble_mesh_cfg_net_transmit_set_t **net_transmit_set**

For ESP_BLE_MESH_MODEL_OP_NETWORK_TRANSMIT_SET

union esp_ble_mesh_cfg_client_common_cb_param_t

#include <esp_ble_mesh_config_model_api.h> Configuration Client Model received message union.

Public Members

esp_ble_mesh_cfg_beacon_status_cb_t **beacon_status**

The beacon status value

esp_ble_mesh_cfg_comp_data_status_cb_t **comp_data_status**

The composition data status value

esp_ble_mesh_cfg_default_ttl_status_cb_t **default_ttl_status**

The default_ttl status value

esp_ble_mesh_cfg_gatt_proxy_status_cb_t **gatt_proxy_status**

The gatt_proxy status value

esp_ble_mesh_cfg_relay_status_cb_t **relay_status**

The relay status value

esp_ble_mesh_cfg_model_pub_status_cb_t **model_pub_status**

The model publication status value

esp_ble_mesh_cfg_model_sub_status_cb_t **model_sub_status**

The model subscription status value

esp_ble_mesh_cfg_net_key_status_cb_t **netkey_status**

The netkey status value

esp_ble_mesh_cfg_app_key_status_cb_t **appkey_status**

The appkey status value

esp_ble_mesh_cfg_mod_app_status_cb_t **model_app_status**

The model app status value

esp_ble_mesh_cfg_friend_status_cb_t **friend_status**

The friend status value

esp_ble_mesh_cfg_hb_pub_status_cb_t **heartbeat_pub_status**

The heartbeat publication status value

esp_ble_mesh_cfg_hb_sub_status_cb_t **heartbeat_sub_status**

The heartbeat subscription status value

esp_ble_mesh_cfg_net_trans_status_cb_t **net_transmit_status**

The network transmit status value

esp_ble_mesh_cfg_model_sub_list_cb_t **model_sub_list**

The model subscription list value

esp_ble_mesh_cfg_net_key_list_cb_t **netkey_list**

The network key index list value

esp_ble_mesh_cfg_app_key_list_cb_t **appkey_list**

The application key index list value

esp_ble_mesh_cfg_node_id_status_cb_t **node_identity_status**

The node identity status value

esp_ble_mesh_cfg_model_app_list_cb_t **model_app_list**

The model application key index list value

esp_ble_mesh_cfg_kr_phase_status_cb_t **kr_phase_status**

The key refresh phase status value

esp_ble_mesh_cfg_lpn_pollto_status_cb_t **lpn_timeout_status**

The low power node poll timeout status value

union esp_ble_mesh_cfg_server_state_change_t

#include <esp_ble_mesh_config_model_api.h> Configuration Server model state change value union.

Public Members

esp_ble_mesh_state_change_cfg_mod_pub_set_t **mod_pub_set**

The recv_op in ctx can be used to decide which state is changed.Config Model Publication Set

esp_ble_mesh_state_change_cfg_model_sub_add_t **mod_sub_add**

Config Model Subscription Add

esp_ble_mesh_state_change_cfg_model_sub_delete_t **mod_sub_delete**

Config Model Subscription Delete

esp_ble_mesh_state_change_cfg_netkey_add_t **netkey_add**

Config NetKey Add

esp_ble_mesh_state_change_cfg_netkey_update_t **netkey_update**

Config NetKey Update

esp_ble_mesh_state_change_cfg_netkey_delete_t **netkey_delete**

Config NetKey Delete

esp_ble_mesh_state_change_cfg_appkey_add_t **appkey_add**

Config AppKey Add

esp_ble_mesh_state_change_cfg_appkey_update_t **appkey_update**

Config AppKey Update

esp_ble_mesh_state_change_cfg_appkey_delete_t **appkey_delete**

Config AppKey Delete

esp_ble_mesh_state_change_cfg_model_app_bind_t **mod_app_bind**

Config Model App Bind

esp_ble_mesh_state_change_cfg_model_app_unbind_t **mod_app_unbind**

Config Model App Unbind

esp_ble_mesh_state_change_cfg_kr_phase_set_t **kr_phase_set**

Config Key Refresh Phase Set

union esp_ble_mesh_cfg_server_cb_value_t

#include <esp_ble_mesh_config_model_api.h> Configuration Server model callback value union.

Public Members

esp_ble_mesh_cfg_server_state_change_t **state_change**
ESP_BLE_MESH_CFG_SERVER_STATE_CHANGE_EVT

Structures

struct esp_ble_mesh_cfg_srv
Configuration Server Model context

Public Members

esp_ble_mesh_model_t ***model**
Pointer to Configuration Server Model

uint8_t **net_transmit**
Network Transmit state

uint8_t **relay**
Relay Mode state

uint8_t **relay_retransmit**
Relay Retransmit state

uint8_t **beacon**
Secure Network Beacon state

uint8_t **gatt_proxy**
GATT Proxy state

uint8_t **friend_state**
Friend state

uint8_t **default_ttl**
Default TTL

struct k_delayed_work **timer**
Heartbeat Publication timer

uint16_t **dst**
Destination address for Heartbeat messages

uint16_t **count**
Number of Heartbeat messages to be sent

Number of Heartbeat messages received

uint8_t **period**
Period for sending Heartbeat messages

uint8_t **ttl**

TTL to be used when sending Heartbeat messages

uint16_t **feature**

Bit field indicating features that trigger Heartbeat messages when changed

uint16_t **net_idx**

NetKey Index used by Heartbeat Publication

struct *esp_ble_mesh_cfg_srv*::[**anonymous**] **heartbeat_pub**

Heartbeat Publication

int64_t **expiry**

Timestamp when Heartbeat subscription period is expired

uint16_t **src**

Source address for Heartbeat messages

uint8_t **min_hops**

Minimum hops when receiving Heartbeat messages

uint8_t **max_hops**

Maximum hops when receiving Heartbeat messages

esp_ble_mesh_cb_t **heartbeat_recv_cb**

Optional heartbeat subscription tracking function

struct *esp_ble_mesh_cfg_srv*::[**anonymous**] **heartbeat_sub**

Heartbeat Subscription

struct esp_ble_mesh_cfg_composition_data_get_t

Parameters of Config Composition Data Get.

Public Members

uint8_t **page**

Page number of the Composition Data.

struct esp_ble_mesh_cfg_model_pub_get_t

Parameters of Config Model Publication Get.

Public Members

uint16_t **element_addr**

The element address

uint16_t **model_id**

The model id

uint16_t **company_id**

The company id, if not a vendor model, shall set to 0xFFFF

struct esp_ble_mesh_cfg_sig_model_sub_get_t

Parameters of Config SIG Model Subscription Get.

Public Members

uint16_t **element_addr**

The element address

uint16_t **model_id**

The model id

struct esp_ble_mesh_cfg_vnd_model_sub_get_t

Parameters of Config Vendor Model Subscription Get.

Public Members

uint16_t **element_addr**

The element address

uint16_t **model_id**

The model id

uint16_t **company_id**

The company id, if not a vendor model, shall set to 0xFFFF

struct esp_ble_mesh_cfg_app_key_get_t

Parameters of Config AppKey Get.

Public Members

uint16_t **net_idx**

The network key index

struct esp_ble_mesh_cfg_node_identity_get_t

Parameters of Config Node Identity Get.

Public Members

uint16_t **net_idx**

The network key index

struct esp_ble_mesh_cfg_sig_model_app_get_t

Parameters of Config SIG Model App Get.

Public Members

uint16_t **element_addr**
The element address

uint16_t **model_id**
The model id

struct esp_ble_mesh_cfg_vnd_model_app_get_t
Parameters of Config Vendor Model App Get.

Public Members

uint16_t **element_addr**
The element address

uint16_t **model_id**
The model id

uint16_t **company_id**
The company id, if not a vendor model, shall set to 0xFFFF

struct esp_ble_mesh_cfg_kr_phase_get_t
Parameters of Config Key Refresh Phase Get.

Public Members

uint16_t **net_idx**
The network key index

struct esp_ble_mesh_cfg_lpn_polltimeout_get_t
Parameters of Config Low Power Node PollTimeout Get.

Public Members

uint16_t **lpn_addr**
The unicast address of the Low Power node

struct esp_ble_mesh_cfg_beacon_set_t
Parameters of Config Beacon Set.

Public Members

uint8_t **beacon**
New Secure Network Beacon state

struct esp_ble_mesh_cfg_default_ttl_set_t

Parameters of Config Default TTL Set.

Public Members

uint8_t **ttl**

The default TTL state value

struct esp_ble_mesh_cfg_friend_set_t

Parameters of Config Friend Set.

Public Members

uint8_t **friend_state**

The friend state value

struct esp_ble_mesh_cfg_gatt_proxy_set_t

Parameters of Config GATT Proxy Set.

Public Members

uint8_t **gatt_proxy**

The GATT Proxy state value

struct esp_ble_mesh_cfg_relay_set_t

Parameters of Config Relay Set.

Public Members

uint8_t **relay**

The relay value

uint8_t **relay_retransmit**

The relay retransmit value

struct esp_ble_mesh_cfg_net_key_add_t

Parameters of Config NetKey Add.

Public Members

uint16_t **net_idx**

The network key index

uint8_t **net_key**[16]

The network key value

struct esp_ble_mesh_cfg_app_key_add_t

Parameters of Config AppKey Add.

Public Members

uint16_t **net_idx**

The network key index

uint16_t **app_idx**

The app key index

uint8_t **app_key**[16]

The app key value

struct esp_ble_mesh_cfg_model_app_bind_t

Parameters of Config Model App Bind.

Public Members

uint16_t **element_addr**

The element address

uint16_t **model_app_idx**

Index of the app key to bind with the model

uint16_t **model_id**

The model id

uint16_t **company_id**

The company id, if not a vendor model, shall set to 0xFFFF

struct esp_ble_mesh_cfg_model_pub_set_t

Parameters of Config Model Publication Set.

Public Members

uint16_t **element_addr**

The element address

uint16_t **publish_addr**

Value of the publish address

uint16_t **publish_app_idx**

Index of the application key

bool **cred_flag**

Value of the Friendship Credential Flag

uint8_t **publish_ttl**

Default TTL value for the publishing messages

uint8_t **publish_period**

Period for periodic status publishing

uint8_t **publish_retransmit**

Number of retransmissions and number of 50-millisecond steps between retransmissions

uint16_t **model_id**

The model id

uint16_t **company_id**

The company id, if not a vendor model, shall set to 0xFFFF

struct esp_ble_mesh_cfg_model_sub_add_t

Parameters of Config Model Subscription Add.

Public Members

uint16_t **element_addr**

The element address

uint16_t **sub_addr**

The address to be added to the Subscription List

uint16_t **model_id**

The model id

uint16_t **company_id**

The company id, if not a vendor model, shall set to 0xFFFF

struct esp_ble_mesh_cfg_model_sub_delete_t

Parameters of Config Model Subscription Delete.

Public Members

uint16_t **element_addr**

The element address

uint16_t **sub_addr**

The address to be removed from the Subscription List

uint16_t **model_id**

The model id

uint16_t **company_id**

The company id, if not a vendor model, shall set to 0xFFFF

struct esp_ble_mesh_cfg_model_sub_overwrite_t

Parameters of Config Model Subscription Overwrite.

Public Members

uint16_t **element_addr**

The element address

uint16_t **sub_addr**

The address to be added to the Subscription List

uint16_t **model_id**

The model id

uint16_t **company_id**

The company id, if not a vendor model, shall set to 0xFFFF

struct esp_ble_mesh_cfg_model_sub_va_add_t

Parameters of Config Model Subscription Virtual Address Add.

Public Members

uint16_t **element_addr**

The element address

uint8_t **label_uuid**[16]

The Label UUID of the virtual address to be added to the Subscription List

uint16_t **model_id**

The model id

uint16_t **company_id**

The company id, if not a vendor model, shall set to 0xFFFF

struct esp_ble_mesh_cfg_model_sub_va_delete_t

Parameters of Config Model Subscription Virtual Address Delete.

Public Members

uint16_t **element_addr**

The element address

uint8_t **label_uuid**[16]

The Label UUID of the virtual address to be removed from the Subscription List

uint16_t **model_id**

The model id

uint16_t **company_id**

The company id, if not a vendor model, shall set to 0xFFFF

struct esp_ble_mesh_cfg_model_sub_va_overwrite_t

Parameters of Config Model Subscription Virtual Address Overwrite.

Public Members

uint16_t **element_addr**

The element address

uint8_t **label_uuid**[16]

The Label UUID of the virtual address to be added to the Subscription List

uint16_t **model_id**

The model id

uint16_t **company_id**

The company id, if not a vendor model, shall set to 0xFFFF

struct esp_ble_mesh_cfg_model_pub_va_set_t

Parameters of Config Model Publication Virtual Address Set.

Public Members

uint16_t **element_addr**

The element address

uint8_t **label_uuid**[16]

Value of the Label UUID publish address

uint16_t **publish_app_idx**

Index of the application key

bool **cred_flag**

Value of the Friendship Credential Flag

uint8_t **publish_ttl**

Default TTL value for the publishing messages

uint8_t **publish_period**

Period for periodic status publishing

uint8_t **publish_retransmit**

Number of retransmissions and number of 50-millisecond steps between retransmissions

uint16_t **model_id**

The model id

uint16_t **company_id**

The company id, if not a vendor model, shall set to 0xFFFF

struct esp_ble_mesh_cfg_model_sub_delete_all_t

Parameters of Config Model Subscription Delete All.

Public Members

uint16_t **element_addr**

The element address

uint16_t **model_id**

The model id

uint16_t **company_id**

The company id, if not a vendor model, shall set to 0xFFFF

struct esp_ble_mesh_cfg_net_key_update_t

Parameters of Config NetKey Update.

Public Members

uint16_t **net_idx**

The network key index

uint8_t **net_key**[16]

The network key value

struct esp_ble_mesh_cfg_net_key_delete_t

Parameters of Config NetKey Delete.

Public Members

uint16_t **net_idx**

The network key index

struct esp_ble_mesh_cfg_app_key_update_t

Parameters of Config AppKey Update.

Public Members

uint16_t **net_idx**

The network key index

uint16_t **app_idx**

The app key index

uint8_t **app_key**[16]
The app key value

struct esp_ble_mesh_cfg_app_key_delete_t
Parameters of Config AppKey Delete.

Public Members

uint16_t **net_idx**
The network key index

uint16_t **app_idx**
The app key index

struct esp_ble_mesh_cfg_node_identity_set_t
Parameters of Config Node Identity Set.

Public Members

uint16_t **net_idx**
The network key index

uint8_t **identity**
New Node Identity state

struct esp_ble_mesh_cfg_model_app_unbind_t
Parameters of Config Model App Unbind.

Public Members

uint16_t **element_addr**
The element address

uint16_t **model_app_idx**
Index of the app key to bind with the model

uint16_t **model_id**
The model id

uint16_t **company_id**
The company id, if not a vendor model, shall set to 0xFFFF

struct esp_ble_mesh_cfg_kr_phase_set_t
Parameters of Config Key Refresh Phase Set.

Public Members

uint16_t **net_idx**

The network key index

uint8_t **transition**

New Key Refresh Phase Transition

struct esp_ble_mesh_cfg_net_transmit_set_t

Parameters of Config Network Transmit Set.

Public Members

uint8_t **net_transmit**

Network Transmit State

struct esp_ble_mesh_cfg_heartbeat_pub_set_t

Parameters of Config Model Heartbeat Publication Set.

Public Members

uint16_t **dst**

Destination address for Heartbeat messages

uint8_t **count**

Number of Heartbeat messages to be sent

uint8_t **period**

Period for sending Heartbeat messages

uint8_t **ttl**

TTL to be used when sending Heartbeat messages

uint16_t **feature**

Bit field indicating features that trigger Heartbeat messages when changed

uint16_t **net_idx**

NetKey Index

struct esp_ble_mesh_cfg_heartbeat_sub_set_t

Parameters of Config Model Heartbeat Subscription Set.

Public Members

uint16_t **src**

Source address for Heartbeat messages

uint16_t **dst**

Destination address for Heartbeat messages

uint8_t **period**

Period for receiving Heartbeat messages

struct esp_ble_mesh_cfg_beacon_status_cb_t

Parameter of Config Beacon Status

Public Members

uint8_t **beacon**

Secure Network Beacon state value

struct esp_ble_mesh_cfg_comp_data_status_cb_t

Parameters of Config Composition Data Status

Public Members

uint8_t **page**

Page number of the Composition Data

struct net_buf_simple ***composition_data**

Pointer to Composition Data for the identified page

struct esp_ble_mesh_cfg_default_ttl_status_cb_t

Parameter of Config Default TTL Status

Public Members

uint8_t **default_ttl**

Default TTL state value

struct esp_ble_mesh_cfg_gatt_proxy_status_cb_t

Parameter of Config GATT Proxy Status

Public Members

uint8_t **gatt_proxy**

GATT Proxy state value

struct esp_ble_mesh_cfg_relay_status_cb_t

Parameters of Config Relay Status

Public Members

uint8_t **relay**

Relay state value

uint8_t **retransmit**

Relay retransmit value(number of retransmissions and number of 10-millisecond steps between retransmissions)

struct esp_ble_mesh_cfg_model_pub_status_cb_t

Parameters of Config Model Publication Status

Public Members

uint8_t **status**

Status Code for the request message

uint16_t **element_addr**

Address of the element

uint16_t **publish_addr**

Value of the publish address

uint16_t **app_idx**

Index of the application key

bool **cred_flag**

Value of the Friendship Credential Flag

uint8_t **ttl**

Default TTL value for the outgoing messages

uint8_t **period**

Period for periodic status publishing

uint8_t **transmit**

Number of retransmissions and number of 50-millisecond steps between retransmissions

uint16_t **company_id**

Company ID

uint16_t **model_id**

Model ID

struct esp_ble_mesh_cfg_model_sub_status_cb_t

Parameters of Config Model Subscription Status

Public Members

uint8_t **status**

Status Code for the request message

uint16_t **element_addr**

Address of the element

uint16_t **sub_addr**

Value of the address

uint16_t **company_id**

Company ID

uint16_t **model_id**

Model ID

struct esp_ble_mesh_cfg_net_key_status_cb_t

Parameters of Config NetKey Status

Public Members

uint8_t **status**

Status Code for the request message

uint16_t **net_idx**

Index of the NetKey

struct esp_ble_mesh_cfg_app_key_status_cb_t

Parameters of Config AppKey Status

Public Members

uint8_t **status**

Status Code for the request message

uint16_t **net_idx**

Index of the NetKey

uint16_t **app_idx**

Index of the application key

struct esp_ble_mesh_cfg_mod_app_status_cb_t

Parameters of Config Model App Status

Public Members

uint8_t **status**

Status Code for the request message

uint16_t **element_addr**

Address of the element

uint16_t **app_idx**

Index of the application key

uint16_t **company_id**

Company ID

uint16_t **model_id**

Model ID

struct esp_ble_mesh_cfg_friend_status_cb_t

Parameter of Config Friend Status

Public Members

uint8_t **friend_state**

Friend state value

struct esp_ble_mesh_cfg_hb_pub_status_cb_t

Parameters of Config Heartbeat Publication Status

Public Members

uint8_t **status**

Status Code for the request message

uint16_t **dst**

Destination address for Heartbeat messages

uint8_t **count**

Number of Heartbeat messages remaining to be sent

uint8_t **period**

Period for sending Heartbeat messages

uint8_t **ttl**

TTL to be used when sending Heartbeat messages

uint16_t **features**

Features that trigger Heartbeat messages when changed

uint16_t **net_idx**

Index of the NetKey

struct esp_ble_mesh_cfg_hb_sub_status_cb_t

Parameters of Config Heartbeat Subscription Status

Public Members

uint8_t **status**

Status Code for the request message

uint16_t **src**

Source address for Heartbeat messages

uint16_t **dst**

Destination address for Heartbeat messages

uint8_t **period**

Remaining Period for processing Heartbeat messages

uint8_t **count**

Number of Heartbeat messages received

uint8_t **min_hops**

Minimum hops when receiving Heartbeat messages

uint8_t **max_hops**

Maximum hops when receiving Heartbeat messages

struct esp_ble_mesh_cfg_net_trans_status_cb_t

Parameters of Config Network Transmit Status

Public Members

uint8_t **net_trans_count**

Number of transmissions for each Network PDU originating from the node

uint8_t **net_trans_step**

Maximum hops when receiving Heartbeat messages

struct esp_ble_mesh_cfg_model_sub_list_cb_t

Parameters of Config SIG/Vendor Subscription List

Public Members

uint8_t **status**

Status Code for the request message

uint16_t **element_addr**
Address of the element

uint16_t **company_id**
Company ID

uint16_t **model_id**
Model ID

struct net_buf_simple ***sub_addr**
A block of all addresses from the Subscription List

struct esp_ble_mesh_cfg_net_key_list_cb_t
Parameter of Config NetKey List

Public Members

struct net_buf_simple ***net_idx**
A list of NetKey Indexes known to the node

struct esp_ble_mesh_cfg_app_key_list_cb_t
Parameters of Config AppKey List

Public Members

uint8_t **status**
Status Code for the request message

uint16_t **net_idx**
NetKey Index of the NetKey that the AppKeys are bound to

struct net_buf_simple ***app_idx**
A list of AppKey indexes that are bound to the NetKey identified by NetKeyIndex

struct esp_ble_mesh_cfg_node_id_status_cb_t
Parameters of Config Node Identity Status

Public Members

uint8_t **status**
Status Code for the request message

uint16_t **net_idx**
Index of the NetKey

uint8_t **identity**
Node Identity state

struct esp_ble_mesh_cfg_model_app_list_cb_t

Parameters of Config SIG/Vendor Model App List

Public Members

uint8_t **status**

Status Code for the request message

uint16_t **element_addr**

Address of the element

uint16_t **company_id**

Company ID

uint16_t **model_id**

Model ID

struct net_buf_simple ***app_idx**

All AppKey indexes bound to the Model

struct esp_ble_mesh_cfg_kr_phase_status_cb_t

Parameters of Config Key Refresh Phase Status

Public Members

uint8_t **status**

Status Code for the request message

uint16_t **net_idx**

Index of the NetKey

uint8_t **phase**

Key Refresh Phase state

struct esp_ble_mesh_cfg_lpn_pollto_status_cb_t

Parameters of Config Low Power Node PollTimeout Status

Public Members

uint16_t **lpn_addr**

The unicast address of the Low Power node

int32_t **poll_timeout**

The current value of the PollTimeout timer of the Low Power node

struct esp_ble_mesh_cfg_client_cb_param_t

Configuration Client Model callback parameters

Public Members

int **error_code**

Appropriate error code

esp_ble_mesh_client_common_param_t ***params**

The client common parameters

esp_ble_mesh_cfg_client_common_cb_param_t **status_cb**

The config status message callback values

struct esp_ble_mesh_state_change_cfg_mod_pub_set_t

Configuration Server model related context.

Public Members

uint16_t **element_addr**

Element Address

uint16_t **pub_addr**

Publish Address

uint16_t **app_idx**

AppKey Index

bool **cred_flag**

Friendship Credential Flag

uint8_t **pub_ttl**

Publish TTL

uint8_t **pub_period**

Publish Period

uint8_t **pub_retransmit**

Publish Retransmit

uint16_t **company_id**

Company ID

uint16_t **model_id**

Model ID

struct esp_ble_mesh_state_change_cfg_model_sub_add_t

Parameters of Config Model Subscription Add

Public Members

uint16_t **element_addr**
Element Address

uint16_t **sub_addr**
Subscription Address

uint16_t **company_id**
Company ID

uint16_t **model_id**
Model ID

struct esp_ble_mesh_state_change_cfg_model_sub_delete_t
Parameters of Config Model Subscription Delete

Public Members

uint16_t **element_addr**
Element Address

uint16_t **sub_addr**
Subscription Address

uint16_t **company_id**
Company ID

uint16_t **model_id**
Model ID

struct esp_ble_mesh_state_change_cfg_netkey_add_t
Parameters of Config NetKey Add

Public Members

uint16_t **net_idx**
NetKey Index

uint8_t **net_key**[16]
NetKey

struct esp_ble_mesh_state_change_cfg_netkey_update_t
Parameters of Config NetKey Update

Public Members

uint16_t **net_idx**
NetKey Index

uint8_t **net_key**[16]
NetKey

struct esp_ble_mesh_state_change_cfg_netkey_delete_t
Parameter of Config NetKey Delete

Public Members

uint16_t **net_idx**
NetKey Index

struct esp_ble_mesh_state_change_cfg_appkey_add_t
Parameters of Config AppKey Add

Public Members

uint16_t **net_idx**
NetKey Index

uint16_t **app_idx**
AppKey Index

uint8_t **app_key**[16]
AppKey

struct esp_ble_mesh_state_change_cfg_appkey_update_t
Parameters of Config AppKey Update

Public Members

uint16_t **net_idx**
NetKey Index

uint16_t **app_idx**
AppKey Index

uint8_t **app_key**[16]
AppKey

struct esp_ble_mesh_state_change_cfg_appkey_delete_t
Parameters of Config AppKey Delete

Public Members

uint16_t **net_idx**
NetKey Index

uint16_t **app_idx**
AppKey Index

struct esp_ble_mesh_state_change_cfg_model_app_bind_t
Parameters of Config Model App Bind

Public Members

uint16_t **element_addr**
Element Address

uint16_t **app_idx**
AppKey Index

uint16_t **company_id**
Company ID

uint16_t **model_id**
Model ID

struct esp_ble_mesh_state_change_cfg_model_app_unbind_t
Parameters of Config Model App Unbind

Public Members

uint16_t **element_addr**
Element Address

uint16_t **app_idx**
AppKey Index

uint16_t **company_id**
Company ID

uint16_t **model_id**
Model ID

struct esp_ble_mesh_state_change_cfg_kr_phase_set_t
Parameters of Config Key Refresh Phase Set

Public Members

uint16_t **net_idx**
NetKey Index

uint8_t **kr_phase**
New Key Refresh Phase Transition

struct esp_ble_mesh_cfg_server_cb_param_t
Configuration Server model callback parameters

Public Members

esp_ble_mesh_model_t ***model**
Pointer to the server model structure

esp_ble_mesh_msg_ctx_t **ctx**
Context of the received message

esp_ble_mesh_cfg_server_cb_value_t **value**
Value of the received configuration messages

Macros

ESP_BLE_MESH_MODEL_CFG_SRV(srv_data)
Define a new Config Server Model.

Note The Config Server Model can only be included by a Primary Element.

Return New Config Server Model instance.

Parameters

- `srv_data`: Pointer to a unique Config Server Model user_data.

ESP_BLE_MESH_MODEL_CFG_CLI(cli_data)
Define a new Config Client Model.

Note The Config Client Model can only be included by a Primary Element.

Return New Config Client Model instance.

Parameters

- `cli_data`: Pointer to a unique struct *esp_ble_mesh_client_t*.

Type Definitions

typedef struct *esp_ble_mesh_cfg_srv* **esp_ble_mesh_cfg_srv_t**

Configuration Server Model context

typedef void (***esp_ble_mesh_cfg_client_cb_t**)(*esp_ble_mesh_cfg_client_cb_event_t* event, *esp_ble_mesh_cfg_client_cb_param_t* *param)

Bluetooth Mesh Config Client and Server Model functions.

Configuration Client Model callback function type

Parameters

- `event`: Event type
- `param`: Pointer to callback parameter

typedef void (***esp_ble_mesh_cfg_server_cb_t**)(*esp_ble_mesh_cfg_server_cb_event_t* event, *esp_ble_mesh_cfg_server_cb_param_t* *param)

Configuration Server Model callback function type.

Parameters

- `event`: Event type
- `param`: Pointer to callback parameter

Enumerations

enum esp_ble_mesh_cfg_client_cb_event_t

This enum value is the event of Configuration Client Model

Values:

ESP_BLE_MESH_CFG_CLIENT_GET_STATE_EVT

ESP_BLE_MESH_CFG_CLIENT_SET_STATE_EVT

ESP_BLE_MESH_CFG_CLIENT_PUBLISH_EVT

ESP_BLE_MESH_CFG_CLIENT_TIMEOUT_EVT

ESP_BLE_MESH_CFG_CLIENT_EVT_MAX

enum esp_ble_mesh_cfg_server_cb_event_t

This enum value is the event of Configuration Server model

Values:

ESP_BLE_MESH_CFG_SERVER_STATE_CHANGE_EVT

ESP_BLE_MESH_CFG_SERVER_EVT_MAX

Health Client/Server Models

Header File

- bt/esp_ble_mesh/api/models/include/esp_ble_mesh_generic_model_api.h

Functions

esp_err_t **esp_ble_mesh_register_generic_client_callback**(*esp_ble_mesh_generic_client_cb_t callback*)

Register BLE Mesh Generic Client Model callback.

Return ESP_OK on success or error code otherwise.

Parameters

- `callback`: Pointer to the callback function.

esp_err_t **esp_ble_mesh_generic_client_get_state**(*esp_ble_mesh_client_common_param_t* **params*, *esp_ble_mesh_generic_client_get_state_t* **get_state*)

Get the value of Generic Server Model states using the Generic Client Model get messages.

Note If you want to find the opcodes and corresponding meanings accepted by this API, please refer to esp_ble_mesh_generic_message_opcode_t in esp_ble_mesh_defs.h

Return ESP_OK on success or error code otherwise.

Parameters

- `params`: Pointer to BLE Mesh common client parameters.
- `get_state`: Pointer to generic get message value. Shall not be set to NULL.

esp_err_t **esp_ble_mesh_generic_client_set_state**(*esp_ble_mesh_client_common_param_t* **params*, *esp_ble_mesh_generic_client_set_state_t* **set_state*)

Set the value of Generic Server Model states using the Generic Client Model set messages.

Note If you want to find the opcodes and corresponding meanings accepted by this API, please refer to esp_ble_mesh_generic_message_opcode_t in esp_ble_mesh_defs.h

Return ESP_OK on success or error code otherwise.

Parameters

- `params`: Pointer to BLE Mesh common client parameters.
- `set_state`: Pointer to generic set message value. Shall not be set to NULL.

esp_err_t **esp_ble_mesh_register_generic_server_callback**(*esp_ble_mesh_generic_server_cb_t callback*)

Register BLE Mesh Generic Server Model callback.

Return ESP_OK on success or error code otherwise.

Parameters

- `callback`: Pointer to the callback function.

Unions

union esp_ble_mesh_generic_client_get_state_t

#include <esp_ble_mesh_generic_model_api.h> Generic Client Model get message union.

Public Members

esp_ble_mesh_gen_user_property_get_t **user_property_get**

For ESP_BLE_MESH_MODEL_OP_GEN_USER_PROPERTY_GET

esp_ble_mesh_gen_admin_property_get_t **admin_property_get**

For ESP_BLE_MESH_MODEL_OP_GEN_ADMIN_PROPERTY_GET

esp_ble_mesh_gen_manufacturer_property_get_t **manufacturer_property_get**

For ESP_BLE_MESH_MODEL_OP_GEN_MANUFACTURER_PROPERTY_SET

esp_ble_mesh_gen_client_properties_get_t **client_properties_get**

For ESP_BLE_MESH_MODEL_OP_GEN_CLIENT_PROPERTIES_GET

union esp_ble_mesh_generic_client_set_state_t

#include <esp_ble_mesh_generic_model_api.h> Generic Client Model set message union.

Public Members

esp_ble_mesh_gen_onoff_set_t **onoff_set**

For ESP_BLE_MESH_MODEL_OP_GEN_ONOFF_SET & ESP_BLE_MESH_MODEL_OP_GEN_ONOFF_SET_UNACK

esp_ble_mesh_gen_level_set_t **level_set**

For ESP_BLE_MESH_MODEL_OP_GEN_LEVEL_SET & ESP_BLE_MESH_MODEL_OP_GEN_LEVEL

esp_ble_mesh_gen_delta_set_t **delta_set**

For ESP_BLE_MESH_MODEL_OP_GEN_DELTA_SET & ESP_BLE_MESH_MODEL_OP_GEN_DELTA

esp_ble_mesh_gen_move_set_t **move_set**

For ESP_BLE_MESH_MODEL_OP_GEN_MOVE_SET & ESP_BLE_MESH_MODEL_OP_GEN_MOVE

esp_ble_mesh_gen_def_trans_time_set_t **def_trans_time_set**
For ESP_BLE_MESH_MODEL_OP_GEN_DEF_TRANS_TIME_SET & ESP_BLE_MESH_MODEL_OP_GEN_DEF_TRANS_TIME_SET_UNACK

esp_ble_mesh_gen_onpowerup_set_t **power_set**
For ESP_BLE_MESH_MODEL_OP_GEN_ONPOWERUP_SET & ESP_BLE_MESH_MODEL_OP_GEN_ONPOWERUP_SET_UNACK

esp_ble_mesh_gen_power_level_set_t **power_level_set**
For ESP_BLE_MESH_MODEL_OP_GEN_POWER_LEVEL_SET & ESP_BLE_MESH_MODEL_OP_GEN_POWER_LEVEL_SET_UNACK

esp_ble_mesh_gen_power_default_set_t **power_default_set**
For ESP_BLE_MESH_MODEL_OP_GEN_POWER_DEFAULT_SET & ESP_BLE_MESH_MODEL_OP_GEN_POWER_DEFAULT_SET_UNACK

esp_ble_mesh_gen_power_range_set_t **power_range_set**
For ESP_BLE_MESH_MODEL_OP_GEN_POWER_RANGE_SET & ESP_BLE_MESH_MODEL_OP_GEN_POWER_RANGE_SET_UNACK

esp_ble_mesh_gen_loc_global_set_t **loc_global_set**
For ESP_BLE_MESH_MODEL_OP_GEN_LOC_GLOBAL_SET & ESP_BLE_MESH_MODEL_OP_GEN_LOC_GLOBAL_SET_UNACK

esp_ble_mesh_gen_loc_local_set_t **loc_local_set**
For ESP_BLE_MESH_MODEL_OP_GEN_LOC_LOCAL_SET & ESP_BLE_MESH_MODEL_OP_GEN_LOC_LOCAL_SET_UNACK

esp_ble_mesh_gen_user_property_set_t **user_property_set**
For ESP_BLE_MESH_MODEL_OP_GEN_USER_PROPERTY_SET & ESP_BLE_MESH_MODEL_OP_GEN_USER_PROPERTY_SET_UNACK

esp_ble_mesh_gen_admin_property_set_t **admin_property_set**
For ESP_BLE_MESH_MODEL_OP_GEN_ADMIN_PROPERTY_SET & ESP_BLE_MESH_MODEL_OP_GEN_ADMIN_PROPERTY_SET_UNACK

esp_ble_mesh_gen_manufacturer_property_set_t **manufacturer_property_set**
For ESP_BLE_MESH_MODEL_OP_GEN_MANUFACTURER_PROPERTY_SET & ESP_BLE_MESH_MODEL_OP_GEN_MANUFACTURER_PROPERTY_SET_UNACK

union esp_ble_mesh_gen_client_status_cb_t

#include <esp_ble_mesh_generic_model_api.h> Generic Client Model received message union.

Public Members

esp_ble_mesh_gen_onoff_status_cb_t **onoff_status**
For ESP_BLE_MESH_MODEL_OP_GEN_ONOFF_STATUS

esp_ble_mesh_gen_level_status_cb_t **level_status**
For ESP_BLE_MESH_MODEL_OP_GEN_LEVEL_STATUS

esp_ble_mesh_gen_def_trans_time_status_cb_t **def_trans_time_status**
For ESP_BLE_MESH_MODEL_OP_GEN_DEF_TRANS_TIME_STATUS

esp_ble_mesh_gen_onpowerup_status_cb_t **onpowerup_status**
For ESP_BLE_MESH_MODEL_OP_GEN_ONPOWERUP_STATUS

esp_ble_mesh_gen_power_level_status_cb_t **power_level_status**
For ESP_BLE_MESH_MODEL_OP_GEN_POWER_LEVEL_STATUS

esp_ble_mesh_gen_power_last_status_cb_t **power_last_status**
For ESP_BLE_MESH_MODEL_OP_GEN_POWER_LAST_STATUS

esp_ble_mesh_gen_power_default_status_cb_t **power_default_status**
For ESP_BLE_MESH_MODEL_OP_GEN_POWER_DEFAULT_STATUS

esp_ble_mesh_gen_power_range_status_cb_t **power_range_status**
For ESP_BLE_MESH_MODEL_OP_GEN_POWER_RANGE_STATUS

esp_ble_mesh_gen_battery_status_cb_t **battery_status**
For ESP_BLE_MESH_MODEL_OP_GEN_BATTERY_STATUS

esp_ble_mesh_gen_loc_global_status_cb_t **location_global_status**
For ESP_BLE_MESH_MODEL_OP_GEN_LOC_GLOBAL_STATUS

esp_ble_mesh_gen_loc_local_status_cb_t **location_local_status**
ESP_BLE_MESH_MODEL_OP_GEN_LOC_LOCAL_STATUS

esp_ble_mesh_gen_user_properties_status_cb_t **user_properties_status**
ESP_BLE_MESH_MODEL_OP_GEN_USER_PROPERTIES_STATUS

esp_ble_mesh_gen_user_property_status_cb_t **user_property_status**
ESP_BLE_MESH_MODEL_OP_GEN_USER_PROPERTY_STATUS

esp_ble_mesh_gen_admin_properties_status_cb_t **admin_properties_status**
ESP_BLE_MESH_MODEL_OP_GEN_ADMIN_PROPERTIES_STATUS

esp_ble_mesh_gen_admin_property_status_cb_t **admin_property_status**
ESP_BLE_MESH_MODEL_OP_GEN_ADMIN_PROPERTY_STATUS

esp_ble_mesh_gen_manufacturer_properties_status_cb_t **manufacturer_properties_status**
ESP_BLE_MESH_MODEL_OP_GEN_MANUFACTURER_PROPERTIES_STATUS

esp_ble_mesh_gen_manufacturer_property_status_cb_t **manufacturer_property_status**
ESP_BLE_MESH_MODEL_OP_GEN_MANUFACTURER_PROPERTY_STATUS

esp_ble_mesh_gen_client_properties_status_cb_t **client_properties_status**
ESP_BLE_MESH_MODEL_OP_GEN_CLIENT_PROPERTIES_STATUS

union esp_ble_mesh_generic_server_state_change_t

#include <esp_ble_mesh_generic_model_api.h> Generic Server Model state change value union.

Public Members

esp_ble_mesh_state_change_gen_onoff_set_t **onoff_set**

The recv_op in ctx can be used to decide which state is changed.Generic OnOff Set

esp_ble_mesh_state_change_gen_level_set_t **level_set**

Generic Level Set

esp_ble_mesh_state_change_gen_delta_set_t **delta_set**

Generic Delta Set

esp_ble_mesh_state_change_gen_move_set_t **move_set**

Generic Move Set

esp_ble_mesh_state_change_gen_def_trans_time_set_t **def_trans_time_set**

Generic Default Transition Time Set

esp_ble_mesh_state_change_gen_onpowerup_set_t **onpowerup_set**

Generic OnPowerUp Set

esp_ble_mesh_state_change_gen_power_level_set_t **power_level_set**

Generic Power Level Set

esp_ble_mesh_state_change_gen_power_default_set_t **power_default_set**

Generic Power Default Set

esp_ble_mesh_state_change_gen_power_range_set_t **power_range_set**

Generic Power Range Set

esp_ble_mesh_state_change_gen_loc_global_set_t **loc_global_set**

Generic Location Global Set

esp_ble_mesh_state_change_gen_loc_local_set_t **loc_local_set**

Generic Location Local Set

esp_ble_mesh_state_change_gen_user_property_set_t **user_property_set**

Generic User Property Set

esp_ble_mesh_state_change_gen_admin_property_set_t **admin_property_set**

Generic Admin Property Set

esp_ble_mesh_state_change_gen_manu_property_set_t **manu_property_set**

Generic Manufacturer Property Set

union esp_ble_mesh_generic_server_recv_get_msg_t

#include <esp_ble_mesh_generic_model_api.h> Generic Server Model received get message union.

Public Members

esp_ble_mesh_server_recv_gen_user_property_get_t **user_property**
Generic User Property Get

esp_ble_mesh_server_recv_gen_admin_property_get_t **admin_property**
Generic Admin Property Get

esp_ble_mesh_server_recv_gen_manufacturer_property_get_t **manu_property**
Generic Manufacturer Property Get

esp_ble_mesh_server_recv_gen_client_properties_get_t **client_properties**
Generic Client Properties Get

union esp_ble_mesh_generic_server_recv_set_msg_t
#include <esp_ble_mesh_generic_model_api.h> Generic Server Model received set message union.

Public Members

esp_ble_mesh_server_recv_gen_onoff_set_t **onoff**
Generic OnOff Set/Generic OnOff Set Unack

esp_ble_mesh_server_recv_gen_level_set_t **level**
Generic Level Set/Generic Level Set Unack

esp_ble_mesh_server_recv_gen_delta_set_t **delta**
Generic Delta Set/Generic Delta Set Unack

esp_ble_mesh_server_recv_gen_move_set_t **move**
Generic Move Set/Generic Move Set Unack

esp_ble_mesh_server_recv_gen_def_trans_time_set_t **def_trans_time**
Generic Default Transition Time Set/Generic Default Transition Time Set Unack

esp_ble_mesh_server_recv_gen_onpowerup_set_t **onpowerup**
Generic OnPowerUp Set/Generic OnPowerUp Set Unack

esp_ble_mesh_server_recv_gen_power_level_set_t **power_level**
Generic Power Level Set/Generic Power Level Set Unack

esp_ble_mesh_server_recv_gen_power_default_set_t **power_default**
Generic Power Default Set/Generic Power Default Set Unack

esp_ble_mesh_server_recv_gen_power_range_set_t **power_range**
Generic Power Range Set/Generic Power Range Set Unack

esp_ble_mesh_server_recv_gen_loc_global_set_t **location_global**
Generic Location Global Set/Generic Location Global Set Unack

esp_ble_mesh_server_recv_gen_loc_local_set_t **location_local**

Generic Location Local Set/Generic Location Local Set Unack

esp_ble_mesh_server_recv_gen_user_property_set_t **user_property**

Generic User Property Set/Generic User Property Set Unack

esp_ble_mesh_server_recv_gen_admin_property_set_t **admin_property**

Generic Admin Property Set/Generic Admin Property Set Unack

esp_ble_mesh_server_recv_gen_manufacturer_property_set_t **manu_property**

Generic Manufacturer Property Set/Generic Manufacturer Property Set Unack

union esp_ble_mesh_generic_server_cb_value_t

#include <esp_ble_mesh_generic_model_api.h> Generic Server Model callback value union.

Public Members

esp_ble_mesh_generic_server_state_change_t **state_change**

ESP_BLE_MESH_GENERIC_SERVER_STATE_CHANGE_EVT

esp_ble_mesh_generic_server_recv_get_msg_t **get**

ESP_BLE_MESH_GENERIC_SERVER_RECV_GET_MSG_EVT

esp_ble_mesh_generic_server_recv_set_msg_t **set**

ESP_BLE_MESH_GENERIC_SERVER_RECV_SET_MSG_EVT

Structures

struct esp_ble_mesh_gen_onoff_set_t

Bluetooth Mesh Generic Client Model Get and Set parameters structure.

Parameters of Generic OnOff Set.

Public Members

bool **op_en**

Indicate if optional parameters are included

uint8_t **onoff**

Target value of Generic OnOff state

uint8_t **tid**

Transaction ID

uint8_t **trans_time**

Time to complete state transition (optional)

uint8_t **delay**

Indicate message execution delay (C.1)

struct esp_ble_mesh_gen_level_set_t

Parameters of Generic Level Set.

Public Members

bool **op_en**

Indicate if optional parameters are included

int16_t **level**

Target value of Generic Level state

uint8_t **tid**

Transaction ID

uint8_t **trans_time**

Time to complete state transition (optional)

uint8_t **delay**

Indicate message execution delay (C.1)

struct esp_ble_mesh_gen_delta_set_t

Parameters of Generic Delta Set.

Public Members

bool **op_en**

Indicate if optional parameters are included

int32_t **level**

Delta change of Generic Level state

uint8_t **tid**

Transaction ID

uint8_t **trans_time**

Time to complete state transition (optional)

uint8_t **delay**

Indicate message execution delay (C.1)

struct esp_ble_mesh_gen_move_set_t

Parameters of Generic Move Set.

Public Members

bool **op_en**

Indicate if optional parameters are included

int16_t **delta_level**

Delta Level step to calculate Move speed for Generic Level state

uint8_t **tid**

Transaction ID

uint8_t **trans_time**

Time to complete state transition (optional)

uint8_t **delay**

Indicate message execution delay (C.1)

struct esp_ble_mesh_gen_def_trans_time_set_t

Parameter of Generic Default Transition Time Set.

Public Members

uint8_t **trans_time**

The value of the Generic Default Transition Time state

struct esp_ble_mesh_gen_onpowerup_set_t

Parameter of Generic OnPowerUp Set.

Public Members

uint8_t **onpowerup**

The value of the Generic OnPowerUp state

struct esp_ble_mesh_gen_power_level_set_t

Parameters of Generic Power Level Set.

Public Members

bool **op_en**

Indicate if optional parameters are included

uint16_t **power**

Target value of Generic Power Actual state

uint8_t **tid**

Transaction ID

uint8_t **trans_time**

Time to complete state transition (optional)

uint8_t **delay**

Indicate message execution delay (C.1)

struct esp_ble_mesh_gen_power_default_set_t

Parameter of Generic Power Default Set.

Public Members

uint16_t **power**

The value of the Generic Power Default state

struct esp_ble_mesh_gen_power_range_set_t

Parameters of Generic Power Range Set.

Public Members

uint16_t **range_min**

Value of Range Min field of Generic Power Range state

uint16_t **range_max**

Value of Range Max field of Generic Power Range state

struct esp_ble_mesh_gen_loc_global_set_t

Parameters of Generic Location Global Set.

Public Members

int32_t **global_latitude**

Global Coordinates (Latitude)

int32_t **global_longitude**

Global Coordinates (Longitude)

int16_t **global_altitude**

Global Altitude

struct esp_ble_mesh_gen_loc_local_set_t

Parameters of Generic Location Local Set.

Public Members

int16_t **local_north**

Local Coordinates (North)

int16_t **local_east**

Local Coordinates (East)

int16_t **local_altitude**

Local Altitude

uint8_t **floor_number**

Floor Number

uint16_t **uncertainty**

Uncertainty

struct esp_ble_mesh_gen_user_property_get_t

Parameter of Generic User Property Get.

Public Members

uint16_t **property_id**

Property ID identifying a Generic User Property

struct esp_ble_mesh_gen_user_property_set_t

Parameters of Generic User Property Set.

Public Members

uint16_t **property_id**

Property ID identifying a Generic User Property

struct net_buf_simple ***property_value**

Raw value for the User Property

struct esp_ble_mesh_gen_admin_property_get_t

Parameter of Generic Admin Property Get.

Public Members

uint16_t **property_id**

Property ID identifying a Generic Admin Property

struct esp_ble_mesh_gen_admin_property_set_t

Parameters of Generic Admin Property Set.

Public Members

uint16_t **property_id**

Property ID identifying a Generic Admin Property

uint8_t **user_access**

Enumeration indicating user access

struct net_buf_simple ***property_value**

Raw value for the Admin Property

struct esp_ble_mesh_gen_manufacturer_property_get_t

Parameter of Generic Manufacturer Property Get.

Public Members

uint16_t **property_id**

Property ID identifying a Generic Manufacturer Property

struct esp_ble_mesh_gen_manufacturer_property_set_t

Parameters of Generic Manufacturer Property Set.

Public Members

uint16_t **property_id**

Property ID identifying a Generic Manufacturer Property

uint8_t **user_access**

Enumeration indicating user access

struct esp_ble_mesh_gen_client_properties_get_t

Parameter of Generic Client Properties Get.

Public Members

uint16_t **property_id**

A starting Client Property ID present within an element

struct esp_ble_mesh_gen_onoff_status_cb_t

Bluetooth Mesh Generic Client Model Get and Set callback parameters structure.

Parameters of Generic OnOff Status.

Public Members

bool **op_en**

Indicate if optional parameters are included

uint8_t **present_onoff**

Current value of Generic OnOff state

uint8_t **target_onoff**

Target value of Generic OnOff state (optional)

uint8_t **remain_time**

Time to complete state transition (C.1)

struct esp_ble_mesh_gen_level_status_cb_t

Parameters of Generic Level Status.

Public Members

bool **op_en**

Indicate if optional parameters are included

int16_t **present_level**

Current value of Generic Level state

int16_t **target_level**

Target value of the Generic Level state (optional)

uint8_t **remain_time**

Time to complete state transition (C.1)

struct esp_ble_mesh_gen_def_trans_time_status_cb_t

Parameter of Generic Default Transition Time Status.

Public Members

uint8_t **trans_time**

The value of the Generic Default Transition Time state

struct esp_ble_mesh_gen_onpowerup_status_cb_t

Parameter of Generic OnPowerUp Status.

Public Members

uint8_t **onpowerup**

The value of the Generic OnPowerUp state

struct esp_ble_mesh_gen_power_level_status_cb_t

Parameters of Generic Power Level Status.

Public Members

bool **op_en**

Indicate if optional parameters are included

uint16_t **present_power**

Current value of Generic Power Actual state

uint16_t **target_power**

Target value of Generic Power Actual state (optional)

uint8_t **remain_time**

Time to complete state transition (C.1)

struct esp_ble_mesh_gen_power_last_status_cb_t

Parameter of Generic Power Last Status.

Public Members

uint16_t **power**

The value of the Generic Power Last state

struct esp_ble_mesh_gen_power_default_status_cb_t

Parameter of Generic Power Default Status.

Public Members

uint16_t **power**

The value of the Generic Default Last state

struct esp_ble_mesh_gen_power_range_status_cb_t

Parameters of Generic Power Range Status.

Public Members

uint8_t **status_code**

Status Code for the request message

uint16_t **range_min**

Value of Range Min field of Generic Power Range state

uint16_t **range_max**

Value of Range Max field of Generic Power Range state

struct esp_ble_mesh_gen_battery_status_cb_t

Parameters of Generic Battery Status.

Public Members

uint32_t **battery_level**

Value of Generic Battery Level state

uint32_t **time_to_discharge**

Value of Generic Battery Time to Discharge state

uint32_t **time_to_charge**

Value of Generic Battery Time to Charge state

uint32_t **flags**

Value of Generic Battery Flags state

struct esp_ble_mesh_gen_loc_global_status_cb_t

Parameters of Generic Location Global Status.

Public Members

int32_t **global_latitude**

Global Coordinates (Latitude)

int32_t **global_longitude**

Global Coordinates (Longitude)

int16_t **global_altitude**

Global Altitude

struct esp_ble_mesh_gen_loc_local_status_cb_t

Parameters of Generic Location Local Status.

Public Members

int16_t **local_north**

Local Coordinates (North)

int16_t **local_east**

Local Coordinates (East)

int16_t **local_altitude**

Local Altitude

uint8_t **floor_number**

Floor Number

uint16_t **uncertainty**

Uncertainty

struct esp_ble_mesh_gen_user_properties_status_cb_t

Parameter of Generic User Properties Status.

Public Members

struct net_buf_simple ***property_ids**

Buffer contains a sequence of N User Property IDs

struct esp_ble_mesh_gen_user_property_status_cb_t

Parameters of Generic User Property Status.

Public Members

bool **op_en**

Indicate if optional parameters are included

uint16_t **property_id**

Property ID identifying a Generic User Property

uint8_t **user_access**

Enumeration indicating user access (optional)

struct net_buf_simple ***property_value**

Raw value for the User Property (C.1)

struct esp_ble_mesh_gen_admin_properties_status_cb_t

Parameter of Generic Admin Properties Status.

Public Members

struct net_buf_simple ***property_ids**

Buffer contains a sequence of N Admin Property IDs

struct esp_ble_mesh_gen_admin_property_status_cb_t

Parameters of Generic Admin Property Status.

Public Members

bool **op_en**

Indicate if optional parameters are included

uint16_t **property_id**

Property ID identifying a Generic Admin Property

uint8_t **user_access**

Enumeration indicating user access (optional)

struct net_buf_simple ***property_value**

Raw value for the Admin Property (C.1)

struct esp_ble_mesh_gen_manufacturer_properties_status_cb_t

Parameter of Generic Manufacturer Properties Status.

Public Members

struct net_buf_simple ***property_ids**

Buffer contains a sequence of N Manufacturer Property IDs

struct esp_ble_mesh_gen_manufacturer_property_status_cb_t

Parameters of Generic Manufacturer Property Status.

Public Members

bool **op_en**

Indicate if optional parameters are included

uint16_t **property_id**

Property ID identifying a Generic Manufacturer Property

uint8_t **user_access**

Enumeration indicating user access (optional)

struct net_buf_simple ***property_value**

Raw value for the Manufacturer Property (C.1)

struct esp_ble_mesh_gen_client_properties_status_cb_t

Parameter of Generic Client Properties Status.

Public Members

struct net_buf_simple ***property_ids**

Buffer contains a sequence of N Client Property IDs

struct esp_ble_mesh_generic_client_cb_param_t

Generic Client Model callback parameters

Public Members

int **error_code**

Appropriate error code

esp_ble_mesh_client_common_param_t ***params**

The client common parameters.

esp_ble_mesh_gen_client_status_cb_t **status_cb**

The generic status message callback values

struct esp_ble_mesh_gen_onoff_state_t

Parameters of Generic OnOff state

Public Members

uint8_t **onoff**

The present value of the Generic OnOff state

uint8_t **target_onoff**

The target value of the Generic OnOff state

struct esp_ble_mesh_gen_onoff_srv_t

User data of Generic OnOff Server Model

Public Members

esp_ble_mesh_model_t ***model**

Pointer to the Generic OnOff Server Model. Initialized internally.

esp_ble_mesh_server_rsp_ctrl_t **rsp_ctrl**

Response control of the server model received messages

esp_ble_mesh_gen_onoff_state_t **state**

Parameters of the Generic OnOff state

esp_ble_mesh_last_msg_info_t **last**

Parameters of the last received set message

esp_ble_mesh_state_transition_t **transition**

Parameters of state transition

struct esp_ble_mesh_gen_level_state_t

Parameters of Generic Level state

Public Members

int16_t **level**

The present value of the Generic Level state

int16_t **target_level**

The target value of the Generic Level state

int16_t **last_level**

When a new transaction starts, level should be set to last_last, and use "level + incoming delta" to calculate the target level. In another word, "last_level" is used to record "level" of the last transaction, and "last_delta" is used to record the previously received delta_level value.The last value of the Generic Level state

int32_t **last_delta**

The last delta change of the Generic Level state

bool **move_start**

Indicate if the transition of the Generic Level state has been started

bool **positive**

Indicate if the transition is positive or negative

struct esp_ble_mesh_gen_level_srv_t

User data of Generic Level Server Model

Public Members

esp_ble_mesh_model_t ***model**

Pointer to the Generic Level Server Model. Initialized internally.

esp_ble_mesh_server_rsp_ctrl_t **rsp_ctrl**

Response control of the server model received messages

esp_ble_mesh_gen_level_state_t **state**

Parameters of the Generic Level state

esp_ble_mesh_last_msg_info_t **last**

Parameters of the last received set message

esp_ble_mesh_state_transition_t **transition**

Parameters of state transition

int32_t **tt_delta_level**

Delta change value of level state transition

struct esp_ble_mesh_gen_def_trans_time_state_t

Parameter of Generic Default Transition Time state

Public Members

uint8_t **trans_time**

The value of the Generic Default Transition Time state

struct esp_ble_mesh_gen_def_trans_time_srv_t

User data of Generic Default Transition Time Server Model

Public Members

esp_ble_mesh_model_t ***model**

Pointer to the Generic Default Transition Time Server Model. Initialized internally.

esp_ble_mesh_server_rsp_ctrl_t **rsp_ctrl**

Response control of the server model received messages

esp_ble_mesh_gen_def_trans_time_state_t **state**

Parameters of the Generic Default Transition Time state

struct esp_ble_mesh_gen_onpowerup_state_t

Parameter of Generic OnPowerUp state

Public Members

uint8_t **onpowerup**

The value of the Generic OnPowerUp state

struct esp_ble_mesh_gen_power_onoff_srv_t

User data of Generic Power OnOff Server Model

Public Members

esp_ble_mesh_model_t ***model**

Pointer to the Generic Power OnOff Server Model. Initialized internally.

esp_ble_mesh_server_rsp_ctrl_t **rsp_ctrl**

Response control of the server model received messages

esp_ble_mesh_gen_onpowerup_state_t ***state**

Parameters of the Generic OnPowerUp state

struct esp_ble_mesh_gen_power_onoff_setup_srv_t

User data of Generic Power OnOff Setup Server Model

Public Members

esp_ble_mesh_model_t ***model**

Pointer to the Generic Power OnOff Setup Server Model. Initialized internally.

esp_ble_mesh_server_rsp_ctrl_t **rsp_ctrl**

Response control of the server model received messages

esp_ble_mesh_gen_onpowerup_state_t ***state**

Parameters of the Generic OnPowerUp state

struct esp_ble_mesh_gen_power_level_state_t

Parameters of Generic Power Level state

Public Members

uint16_t **power_actual**

The present value of the Generic Power Actual state

uint16_t **target_power_actual**

The target value of the Generic Power Actual state

uint16_t **power_last**

The value of the Generic Power Last state

uint16_t **power_default**

The value of the Generic Power Default state

uint8_t **status_code**

The status code of setting Generic Power Range state

uint16_t **power_range_min**

The minimum value of the Generic Power Range state

uint16_t **power_range_max**

The maximum value of the Generic Power Range state

struct esp_ble_mesh_gen_power_level_srv_t

User data of Generic Power Level Server Model

Public Members

esp_ble_mesh_model_t ***model**

Pointer to the Generic Power Level Server Model. Initialized internally.

esp_ble_mesh_server_rsp_ctrl_t **rsp_ctrl**

Response control of the server model received messages

esp_ble_mesh_gen_power_level_state_t ***state**

Parameters of the Generic Power Level state

esp_ble_mesh_last_msg_info_t **last**

Parameters of the last received set message

esp_ble_mesh_state_transition_t **transition**

Parameters of state transition

int32_t **tt_delta_level**

Delta change value of level state transition

struct esp_ble_mesh_gen_power_level_setup_srv_t

User data of Generic Power Level Setup Server Model

Public Members

esp_ble_mesh_model_t ***model**

Pointer to the Generic Power Level Setup Server Model. Initialized internally.

esp_ble_mesh_server_rsp_ctrl_t **rsp_ctrl**

Response control of the server model received messages

esp_ble_mesh_gen_power_level_state_t ***state**

Parameters of the Generic Power Level state

struct esp_ble_mesh_gen_battery_state_t

Parameters of Generic Battery state

Public Members

uint32_t **battery_level**

The value of the Generic Battery Level state

uint32_t **time_to_discharge**

The value of the Generic Battery Time to Discharge state

uint32_t **time_to_charge**

The value of the Generic Battery Time to Charge state

uint32_t **battery_flags**

The value of the Generic Battery Flags state

struct esp_ble_mesh_gen_battery_srv_t

User data of Generic Battery Server Model

Public Members

esp_ble_mesh_model_t ***model**

Pointer to the Generic Battery Server Model. Initialized internally.

esp_ble_mesh_server_rsp_ctrl_t **rsp_ctrl**

Response control of the server model received messages

esp_ble_mesh_gen_battery_state_t **state**

Parameters of the Generic Battery state

struct esp_ble_mesh_gen_location_state_t

Parameters of Generic Location state

Public Members

int32_t **global_latitude**
The value of the Global Latitude field

int32_t **global_longitude**
The value of the Global Longitude field

int16_t **global_altitude**
The value of the Global Altitude field

int16_t **local_north**
The value of the Local North field

int16_t **local_east**
The value of the Local East field

int16_t **local_altitude**
The value of the Local Altitude field

uint8_t **floor_number**
The value of the Floor Number field

uint16_t **uncertainty**
The value of the Uncertainty field

struct esp_ble_mesh_gen_location_srv_t
User data of Generic Location Server Model

Public Members

esp_ble_mesh_model_t ***model**
Pointer to the Generic Location Server Model. Initialized internally.

esp_ble_mesh_server_rsp_ctrl_t **rsp_ctrl**
Response control of the server model received messages

esp_ble_mesh_gen_location_state_t ***state**
Parameters of the Generic Location state

struct esp_ble_mesh_gen_location_setup_srv_t
User data of Generic Location Setup Server Model

Public Members

esp_ble_mesh_model_t ***model**
Pointer to the Generic Location Setup Server Model. Initialized internally.

esp_ble_mesh_server_rsp_ctrl_t **rsp_ctrl**

Response control of the server model received messages

esp_ble_mesh_gen_location_state_t ***state**

Parameters of the Generic Location state

struct esp_ble_mesh_generic_property_t

Parameters of Generic Property states

Public Members

uint16_t **id**

The value of User/Admin/Manufacturer Property ID

uint8_t **user_access**

The value of User Access field

uint8_t **admin_access**

The value of Admin Access field

uint8_t **manu_access**

The value of Manufacturer Access field

struct net_buf_simple ***val**

The value of User/Admin/Manufacturer Property

struct esp_ble_mesh_gen_user_prop_srv_t

User data of Generic User Property Server Model

Public Members

esp_ble_mesh_model_t ***model**

Pointer to the Generic User Property Server Model. Initialized internally.

esp_ble_mesh_server_rsp_ctrl_t **rsp_ctrl**

Response control of the server model received messages

uint8_t **property_count**

Generic User Property count

esp_ble_mesh_generic_property_t ***properties**

Parameters of the Generic User Property state

struct esp_ble_mesh_gen_admin_prop_srv_t

User data of Generic Admin Property Server Model

Public Members

esp_ble_mesh_model_t ***model**

Pointer to the Generic Admin Property Server Model. Initialized internally.

esp_ble_mesh_server_rsp_ctrl_t **rsp_ctrl**

Response control of the server model received messages

uint8_t **property_count**

Generic Admin Property count

esp_ble_mesh_generic_property_t ***properties**

Parameters of the Generic Admin Property state

struct esp_ble_mesh_gen_manu_prop_srv_t

User data of Generic Manufacturer Property Server Model

Public Members

esp_ble_mesh_model_t ***model**

Pointer to the Generic Manufacturer Property Server Model. Initialized internally.

esp_ble_mesh_server_rsp_ctrl_t **rsp_ctrl**

Response control of the server model received messages

uint8_t **property_count**

Generic Manufacturer Property count

esp_ble_mesh_generic_property_t ***properties**

Parameters of the Generic Manufacturer Property state

struct esp_ble_mesh_gen_client_prop_srv_t

User data of Generic Client Property Server Model

Public Members

esp_ble_mesh_model_t ***model**

Pointer to the Generic Client Property Server Model. Initialized internally.

esp_ble_mesh_server_rsp_ctrl_t **rsp_ctrl**

Response control of the server model received messages

uint8_t **id_count**

Generic Client Property ID count

uint16_t ***property_ids**

Parameters of the Generic Client Property state

struct esp_ble_mesh_state_change_gen_onoff_set_t

Parameter of Generic OnOff Set state change event

Public Members

uint8_t **onoff**

The value of Generic OnOff state

struct esp_ble_mesh_state_change_gen_level_set_t

Parameter of Generic Level Set state change event

Public Members

int16_t **level**

The value of Generic Level state

struct esp_ble_mesh_state_change_gen_delta_set_t

Parameter of Generic Delta Set state change event

Public Members

int16_t **level**

The value of Generic Level state

struct esp_ble_mesh_state_change_gen_move_set_t

Parameter of Generic Move Set state change event

Public Members

int16_t **level**

The value of Generic Level state

struct esp_ble_mesh_state_change_gen_def_trans_time_set_t

Parameter of Generic Default Transition Time Set state change event

Public Members

uint8_t **trans_time**

The value of Generic Default Transition Time state

struct esp_ble_mesh_state_change_gen_onpowerup_set_t

Parameter of Generic OnPowerUp Set state change event

Public Members

uint8_t **onpowerup**

The value of Generic OnPowerUp state

struct esp_ble_mesh_state_change_gen_power_level_set_t

Parameter of Generic Power Level Set state change event

Public Members

uint16_t **power**

The value of Generic Power Actual state

struct esp_ble_mesh_state_change_gen_power_default_set_t

Parameter of Generic Power Default Set state change event

Public Members

uint16_t **power**

The value of Generic Power Default state

struct esp_ble_mesh_state_change_gen_power_range_set_t

Parameters of Generic Power Range Set state change event

Public Members

uint16_t **range_min**

The minimum value of Generic Power Range state

uint16_t **range_max**

The maximum value of Generic Power Range state

struct esp_ble_mesh_state_change_gen_loc_global_set_t

Parameters of Generic Location Global Set state change event

Public Members

int32_t **latitude**

The Global Latitude value of Generic Location state

int32_t **longitude**

The Global Longitude value of Generic Location state

int16_t **altitude**

The Global Altitude value of Generic Location state

struct esp_ble_mesh_state_change_gen_loc_local_set_t

Parameters of Generic Location Local Set state change event

Public Members

int16_t **north**

The Local North value of Generic Location state

int16_t **east**

The Local East value of Generic Location state

int16_t **altitude**

The Local Altitude value of Generic Location state

uint8_t **floor_number**

The Floor Number value of Generic Location state

uint16_t **uncertainty**

The Uncertainty value of Generic Location state

struct esp_ble_mesh_state_change_gen_user_property_set_t

Parameters of Generic User Property Set state change event

Public Members

uint16_t **id**

The property id of Generic User Property state

struct net_buf_simple ***value**

The property value of Generic User Property state

struct esp_ble_mesh_state_change_gen_admin_property_set_t

Parameters of Generic Admin Property Set state change event

Public Members

uint16_t **id**

The property id of Generic Admin Property state

uint8_t **access**

The property access of Generic Admin Property state

struct net_buf_simple ***value**

The property value of Generic Admin Property state

struct esp_ble_mesh_state_change_gen_manu_property_set_t

Parameters of Generic Manufacturer Property Set state change event

Public Members

uint16_t **id**

The property id of Generic Manufacturer Property state

uint8_t **access**

The property value of Generic Manufacturer Property state

struct esp_ble_mesh_server_recv_gen_user_property_get_t

Context of the received Generic User Property Get message

Public Members

uint16_t **property_id**

Property ID identifying a Generic User Property

struct esp_ble_mesh_server_recv_gen_admin_property_get_t

Context of the received Generic Admin Property Get message

Public Members

uint16_t **property_id**

Property ID identifying a Generic Admin Property

struct esp_ble_mesh_server_recv_gen_manufacturer_property_get_t

Context of the received Generic Manufacturer Property message

Public Members

uint16_t **property_id**

Property ID identifying a Generic Manufacturer Property

struct esp_ble_mesh_server_recv_gen_client_properties_get_t

Context of the received Generic Client Properties Get message

Public Members

uint16_t **property_id**

A starting Client Property ID present within an element

struct esp_ble_mesh_server_recv_gen_onoff_set_t

Context of the received Generic OnOff Set message

Public Members

bool **op_en**

Indicate if optional parameters are included

uint8_t **onoff**

Target value of Generic OnOff state

uint8_t **tid**

Transaction ID

uint8_t **trans_time**

Time to complete state transition (optional)

uint8_t **delay**

Indicate message execution delay (C.1)

struct esp_ble_mesh_server_recv_gen_level_set_t

Context of the received Generic Level Set message

Public Members

bool **op_en**

Indicate if optional parameters are included

int16_t **level**

Target value of Generic Level state

uint8_t **tid**

Transaction ID

uint8_t **trans_time**

Time to complete state transition (optional)

uint8_t **delay**

Indicate message execution delay (C.1)

struct esp_ble_mesh_server_recv_gen_delta_set_t

Context of the received Generic Delta Set message

Public Members

bool **op_en**

Indicate if optional parameters are included

int32_t **delta_level**

Delta change of Generic Level state

uint8_t **tid**

Transaction ID

uint8_t **trans_time**

Time to complete state transition (optional)

uint8_t **delay**

Indicate message execution delay (C.1)

struct esp_ble_mesh_server_recv_gen_move_set_t

Context of the received Generic Move Set message

Public Members

bool **op_en**

Indicate if optional parameters are included

int16_t **delta_level**

Delta Level step to calculate Move speed for Generic Level state

uint8_t **tid**

Transaction ID

uint8_t **trans_time**

Time to complete state transition (optional)

uint8_t **delay**

Indicate message execution delay (C.1)

struct esp_ble_mesh_server_recv_gen_def_trans_time_set_t

Context of the received Generic Default Transition Time Set message

Public Members

uint8_t **trans_time**

The value of the Generic Default Transition Time state

struct esp_ble_mesh_server_recv_gen_onpowerup_set_t

Context of the received Generic OnPowerUp Set message

Public Members

uint8_t **onpowerup**

The value of the Generic OnPowerUp state

struct esp_ble_mesh_server_recv_gen_power_level_set_t

Context of the received Generic Power Level Set message

Public Members

bool **op_en**
Indicate if optional parameters are included

uint16_t **power**
Target value of Generic Power Actual state

uint8_t **tid**
Transaction ID

uint8_t **trans_time**
Time to complete state transition (optional)

uint8_t **delay**
Indicate message execution delay (C.1)

struct esp_ble_mesh_server_recv_gen_power_default_set_t
Context of the received Generic Power Default Set message

Public Members

uint16_t **power**
The value of the Generic Power Default state

struct esp_ble_mesh_server_recv_gen_power_range_set_t
Context of the received Generic Power Range Set message

Public Members

uint16_t **range_min**
Value of Range Min field of Generic Power Range state

uint16_t **range_max**
Value of Range Max field of Generic Power Range state

struct esp_ble_mesh_server_recv_gen_loc_global_set_t
Context of the received Generic Location Global Set message

Public Members

int32_t **global_latitude**
Global Coordinates (Latitude)

int32_t **global_longitude**
Global Coordinates (Longitude)

int16_t **global_altitude**
Global Altitude

struct esp_ble_mesh_server_recv_gen_loc_local_set_t
Context of the received Generic Location Local Set message

Public Members

int16_t **local_north**
Local Coordinates (North)

int16_t **local_east**
Local Coordinates (East)

int16_t **local_altitude**
Local Altitude

uint8_t **floor_number**
Floor Number

uint16_t **uncertainty**
Uncertainty

struct esp_ble_mesh_server_recv_gen_user_property_set_t
Context of the received Generic User Property Set message

Public Members

uint16_t **property_id**
Property ID identifying a Generic User Property

struct net_buf_simple ***property_value**
Raw value for the User Property

struct esp_ble_mesh_server_recv_gen_admin_property_set_t
Context of the received Generic Admin Property Set message

Public Members

uint16_t **property_id**
Property ID identifying a Generic Admin Property

uint8_t **user_access**
Enumeration indicating user access

struct net_buf_simple ***property_value**
Raw value for the Admin Property

`struct esp_ble_mesh_server_recv_gen_manufacturer_property_set_t`

Context of the received Generic Manufacturer Property Set message

Public Members

uint16_t **property_id**

Property ID identifying a Generic Manufacturer Property

uint8_t **user_access**

Enumeration indicating user access

`struct esp_ble_mesh_generic_server_cb_param_t`

Generic Server Model callback parameters

Public Members

esp_ble_mesh_model_t ***model**

Pointer to Generic Server Models

esp_ble_mesh_msg_ctx_t **ctx**

Context of the received messages

esp_ble_mesh_generic_server_cb_value_t **value**

Value of the received Generic Messages

Macros

`ESP_BLE_MESH_MODEL_GEN_ONOFF_CLI`(cli_pub, cli_data)

Define a new Generic OnOff Client Model.

Note This API needs to be called for each element on which the application needs to have a Generic OnOff Client Model.

Return New Generic OnOff Client Model instance.

Parameters

- `cli_pub`: Pointer to the unique struct *esp_ble_mesh_model_pub_t*.
- `cli_data`: Pointer to the unique struct *esp_ble_mesh_client_t*.

`ESP_BLE_MESH_MODEL_GEN_LEVEL_CLI`(cli_pub, cli_data)

Define a new Generic Level Client Model.

Note This API needs to be called for each element on which the application needs to have a Generic Level Client Model.

Return New Generic Level Client Model instance.

Parameters

- `cli_pub`: Pointer to the unique struct *esp_ble_mesh_model_pub_t*.
- `cli_data`: Pointer to the unique struct *esp_ble_mesh_client_t*.

`ESP_BLE_MESH_MODEL_GEN_DEF_TRANS_TIME_CLI`(cli_pub, cli_data)

Define a new Generic Default Transition Time Client Model.

Note This API needs to be called for each element on which the application needs to have a Generic Default Transition Time Client Model.

Return New Generic Default Transition Time Client Model instance.

Parameters

- `cli_pub`: Pointer to the unique struct *esp_ble_mesh_model_pub_t*.
- `cli_data`: Pointer to the unique struct *esp_ble_mesh_client_t*.

`ESP_BLE_MESH_MODEL_GEN_POWER_ONOFF_CLI`(cli_pub, cli_data)

Define a new Generic Power OnOff Client Model.

Note This API needs to be called for each element on which the application needs to have a Generic Power OnOff Client Model.

Return New Generic Power OnOff Client Model instance.

Parameters

- `cli_pub`: Pointer to the unique struct *esp_ble_mesh_model_pub_t*.
- `cli_data`: Pointer to the unique struct *esp_ble_mesh_client_t*.

`ESP_BLE_MESH_MODEL_GEN_POWER_LEVEL_CLI`(cli_pub, cli_data)

Define a new Generic Power Level Client Model.

Note This API needs to be called for each element on which the application needs to have a Generic Power Level Client Model.

Return New Generic Power Level Client Model instance.

Parameters

- `cli_pub`: Pointer to the unique struct *esp_ble_mesh_model_pub_t*.
- `cli_data`: Pointer to the unique struct *esp_ble_mesh_client_t*.

`ESP_BLE_MESH_MODEL_GEN_BATTERY_CLI`(cli_pub, cli_data)

Define a new Generic Battery Client Model.

Note This API needs to be called for each element on which the application needs to have a Generic Battery Client Model.

Return New Generic Battery Client Model instance.

Parameters

- `cli_pub`: Pointer to the unique struct *esp_ble_mesh_model_pub_t*.
- `cli_data`: Pointer to the unique struct *esp_ble_mesh_client_t*.

`ESP_BLE_MESH_MODEL_GEN_LOCATION_CLI`(cli_pub, cli_data)

Define a new Generic Location Client Model.

Note This API needs to be called for each element on which the application needs to have a Generic Location Client Model.

Return New Generic Location Client Model instance.

Parameters

- `cli_pub`: Pointer to the unique struct *esp_ble_mesh_model_pub_t*.
- `cli_data`: Pointer to the unique struct *esp_ble_mesh_client_t*.

`ESP_BLE_MESH_MODEL_GEN_PROPERTY_CLI`(cli_pub, cli_data)

Define a new Generic Property Client Model.

Note This API needs to be called for each element on which the application needs to have a Generic Property Client Model.

Return New Generic Location Client Model instance.

Parameters

- `cli_pub`: Pointer to the unique struct *esp_ble_mesh_model_pub_t*.
- `cli_data`: Pointer to the unique struct *esp_ble_mesh_client_t*.

`ESP_BLE_MESH_MODEL_GEN_ONOFF_SRV`(srv_pub, srv_data)

Generic Server Models related context.

Define a new Generic OnOff Server Model.

Note 1. The Generic OnOff Server Model is a root model.

1. This model shall support model publication and model subscription.

Return New Generic OnOff Server Model instance.

Parameters

- `srv_pub`: Pointer to the unique struct *esp_ble_mesh_model_pub_t*.

- `srv_data`: Pointer to the unique struct *esp_ble_mesh_gen_onoff_srv_t*.

`ESP_BLE_MESH_MODEL_GEN_LEVEL_SRV`(srv_pub, srv_data)

Define a new Generic Level Server Model.

Note 1. The Generic Level Server Model is a root model.

1. This model shall support model publication and model subscription.

Return New Generic Level Server Model instance.

Parameters

- `srv_pub`: Pointer to the unique struct *esp_ble_mesh_model_pub_t*.
- `srv_data`: Pointer to the unique struct *esp_ble_mesh_gen_level_srv_t*.

`ESP_BLE_MESH_MODEL_GEN_DEF_TRANS_TIME_SRV`(srv_pub, srv_data)

Define a new Generic Default Transition Time Server Model.

Note 1. The Generic Default Transition Time Server Model is a root model.

1. This model shall support model publication and model subscription.

Return New Generic Default Transition Time Server Model instance.

Parameters

- `srv_pub`: Pointer to the unique struct *esp_ble_mesh_model_pub_t*.
- `srv_data`: Pointer to the unique struct *esp_ble_mesh_gen_def_trans_time_srv_t*.

`ESP_BLE_MESH_MODEL_GEN_POWER_ONOFF_SRV`(srv_pub, srv_data)

Define a new Generic Power OnOff Server Model.

Note 1. The Generic Power OnOff Server model extends the Generic OnOff Server model. When this model is present on an element, the corresponding Generic Power OnOff Setup Server model shall also be present.

1. This model may be used to represent a variety of devices that do not fit any of the model descriptions that have been defined but support the generic properties of On/Off.
2. This model shall support model publication and model subscription.

Return New Generic Power OnOff Server Model instance.

Parameters

- `srv_pub`: Pointer to the unique struct *esp_ble_mesh_model_pub_t*.
- `srv_data`: Pointer to the unique struct *esp_ble_mesh_gen_power_onoff_srv_t*.

`ESP_BLE_MESH_MODEL_GEN_POWER_ONOFF_SETUP_SRV`(srv_pub, srv_data)

Define a new Generic Power OnOff Setup Server Model.

Note 1. The Generic Power OnOff Setup Server model extends the Generic Power OnOff Server model and the Generic Default Transition Time Server model.

1. This model shall support model subscription.

Return New Generic Power OnOff Setup Server Model instance.

Parameters

- `srv_pub`: Pointer to the unique struct *esp_ble_mesh_model_pub_t*.
- `srv_data`: Pointer to the unique struct *esp_ble_mesh_gen_power_onoff_setup_srv_t*.

`ESP_BLE_MESH_MODEL_GEN_POWER_LEVEL_SRV`(srv_pub, srv_data)

Define a new Generic Power Level Server Model.

Note 1. The Generic Power Level Server model extends the Generic Power OnOff Server model and the Generic Level Server model. When this model is present on an Element, the corresponding Generic Power Level Setup Server model shall also be present.

1. This model shall support model publication and model subscription.

Return New Generic Power Level Server Model instance.

Parameters

- `srv_pub`: Pointer to the unique struct *esp_ble_mesh_model_pub_t*.
- `srv_data`: Pointer to the unique struct *esp_ble_mesh_gen_power_level_srv_t*.

`ESP_BLE_MESH_MODEL_GEN_POWER_LEVEL_SETUP_SRV`(srv_pub, srv_data)

Define a new Generic Power Level Setup Server Model.

Note 1. The Generic Power Level Setup Server model extends the Generic Power Level Server model and the Generic Power OnOff Setup Server model.

1. This model shall support model subscription.

Return New Generic Power Level Setup Server Model instance.

Parameters

- `srv_pub`: Pointer to the unique struct *esp_ble_mesh_model_pub_t*.
- `srv_data`: Pointer to the unique struct *esp_ble_mesh_gen_power_level_setup_srv_t*.

`ESP_BLE_MESH_MODEL_GEN_BATTERY_SRV`(srv_pub, srv_data)

Define a new Generic Battery Server Model.

Note 1. The Generic Battery Server Model is a root model.

1. This model shall support model publication and model subscription.
2. The model may be used to represent an element that is powered by a battery.

Return New Generic Battery Server Model instance.

Parameters

- `srv_pub`: Pointer to the unique struct *esp_ble_mesh_model_pub_t*.
- `srv_data`: Pointer to the unique struct *esp_ble_mesh_gen_battery_srv_t*.

`ESP_BLE_MESH_MODEL_GEN_LOCATION_SRV`(srv_pub, srv_data)

Define a new Generic Location Server Model.

Note 1. The Generic Location Server model is a root model. When this model is present on an Element, the corresponding Generic Location Setup Server model shall also be present.

1. This model shall support model publication and model subscription.
2. The model may be used to represent an element that knows its location (global or local).

Return New Generic Location Server Model instance.

Parameters

- `srv_pub`: Pointer to the unique struct *esp_ble_mesh_model_pub_t*.
- `srv_data`: Pointer to the unique struct *esp_ble_mesh_gen_location_srv_t*.

`ESP_BLE_MESH_MODEL_GEN_LOCATION_SETUP_SRV`(srv_pub, srv_data)

Define a new Generic Location Setup Server Model.

Note 1. The Generic Location Setup Server model extends the Generic Location Server model.

1. This model shall support model subscription.

Return New Generic Location Setup Server Model instance.

Parameters

- `srv_pub`: Pointer to the unique struct *esp_ble_mesh_model_pub_t*.
- `srv_data`: Pointer to the unique struct *esp_ble_mesh_gen_location_setup_srv_t*.

`ESP_BLE_MESH_MODEL_GEN_USER_PROP_SRV`(srv_pub, srv_data)

Define a new Generic User Property Server Model.

Note 1. The Generic User Property Server model is a root model.

1. This model shall support model publication and model subscription.

Return New Generic User Property Server Model instance.

Parameters

- `srv_pub`: Pointer to the unique struct *esp_ble_mesh_model_pub_t*.
- `srv_data`: Pointer to the unique struct *esp_ble_mesh_gen_user_prop_srv_t*.

`ESP_BLE_MESH_MODEL_GEN_ADMIN_PROP_SRV`(srv_pub, srv_data)

Define a new Generic Admin Property Server Model.

Note 1. The Generic Admin Property Server model extends the Generic User Property Server model.

1. This model shall support model publication and model subscription.

Return New Generic Admin Property Server Model instance.

Parameters

- `srv_pub`: Pointer to the unique struct *esp_ble_mesh_model_pub_t*.
- `srv_data`: Pointer to the unique struct *esp_ble_mesh_gen_admin_prop_srv_t*.

`ESP_BLE_MESH_MODEL_GEN_MANUFACTURER_PROP_SRV`(srv_pub, srv_data)

Define a new Generic Manufacturer Property Server Model.

Note 1. The Generic Manufacturer Property Server model extends the Generic User Property Server model.

1. This model shall support model publication and model subscription.

Return New Generic Manufacturer Property Server Model instance.

Parameters

- `srv_pub`: Pointer to the unique struct *esp_ble_mesh_model_pub_t*.
- `srv_data`: Pointer to the unique struct *esp_ble_mesh_gen_manu_prop_srv_t*.

`ESP_BLE_MESH_MODEL_GEN_CLIENT_PROP_SRV`(srv_pub, srv_data)

Define a new Generic User Property Server Model.

Note 1. The Generic Client Property Server model is a root model.

1. This model shall support model publication and model subscription.

Return New Generic Client Property Server Model instance.

Parameters

- `srv_pub`: Pointer to the unique struct *esp_ble_mesh_model_pub_t*.
- `srv_data`: Pointer to the unique struct *esp_ble_mesh_gen_client_prop_srv_t*.

Type Definitions

typedef void (*esp_ble_mesh_generic_client_cb_t)(*esp_ble_mesh_generic_client_cb_event_t* event, *esp_ble_mesh_generic_client_cb_param_t* *param)

Bluetooth Mesh Generic Client Model function.

Generic Client Model callback function type

Parameters

- `event`: Event type
- `param`: Pointer to callback parameter

typedef void (*esp_ble_mesh_generic_server_cb_t)(*esp_ble_mesh_generic_server_cb_event_t* event, *esp_ble_mesh_generic_server_cb_param_t* *param)

Bluetooth Mesh Generic Server Model function.

Generic Server Model callback function type

Parameters

- `event`: Event type
- `param`: Pointer to callback parameter

Enumerations

enum esp_ble_mesh_generic_client_cb_event_t

This enum value is the event of Generic Client Model

Values:

ESP_BLE_MESH_GENERIC_CLIENT_GET_STATE_EVT

ESP_BLE_MESH_GENERIC_CLIENT_SET_STATE_EVT

ESP_BLE_MESH_GENERIC_CLIENT_PUBLISH_EVT

ESP_BLE_MESH_GENERIC_CLIENT_TIMEOUT_EVT

ESP_BLE_MESH_GENERIC_CLIENT_EVT_MAX

enum esp_ble_mesh_gen_user_prop_access_t

This enum value is the access value of Generic User Property

Values:

ESP_BLE_MESH_GEN_USER_ACCESS_PROHIBIT

ESP_BLE_MESH_GEN_USER_ACCESS_READ

ESP_BLE_MESH_GEN_USER_ACCESS_WRITE

ESP_BLE_MESH_GEN_USER_ACCESS_READ_WRITE

enum esp_ble_mesh_gen_admin_prop_access_t

This enum value is the access value of Generic Admin Property

Values:

ESP_BLE_MESH_GEN_ADMIN_NOT_USER_PROP

ESP_BLE_MESH_GEN_ADMIN_ACCESS_READ

ESP_BLE_MESH_GEN_ADMIN_ACCESS_WRITE

ESP_BLE_MESH_GEN_ADMIN_ACCESS_READ_WRITE

enum esp_ble_mesh_gen_manu_prop_access_t

This enum value is the access value of Generic Manufacturer Property

Values:

ESP_BLE_MESH_GEN_MANU_NOT_USER_PROP

ESP_BLE_MESH_GEN_MANU_ACCESS_READ

enum esp_ble_mesh_generic_server_cb_event_t

This enum value is the event of Generic Server Model

Values:

ESP_BLE_MESH_GENERIC_SERVER_STATE_CHANGE_EVT

1. When get_auto_rsp is set to ESP_BLE_MESH_SERVER_AUTO_RSP, no event will be callback to the application layer when Generic Get messages are received.
2. When set_auto_rsp is set to ESP_BLE_MESH_SERVER_AUTO_RSP, this event will be callback to the application layer when Generic Set/Set Unack messages are received.

ESP_BLE_MESH_GENERIC_SERVER_RECV_GET_MSG_EVT

When get_auto_rsp is set to ESP_BLE_MESH_SERVER_RSP_BY_APP, this event will be callback to the application layer when Generic Get messages are received.

ESP_BLE_MESH_GENERIC_SERVER_RECV_SET_MSG_EVT

When set_auto_rsp is set to ESP_BLE_MESH_SERVER_RSP_BY_APP, this event will be callback to the application layer when Generic Set/Set Unack messages are received.

ESP_BLE_MESH_GENERIC_SERVER_EVT_MAX

Generic Client/Server Models

Header File

- bt/esp_ble_mesh/api/models/include/esp_ble_mesh_health_model_api.h

Functions

esp_err_t **esp_ble_mesh_register_health_client_callback**(*esp_ble_mesh_health_client_cb_t callback*)

Register BLE Mesh Health Model callback, the callback will report Health Client & Server Model events.

Return ESP_OK on success or error code otherwise.

Parameters

- `callback`: Pointer to the callback function.

esp_err_t **esp_ble_mesh_register_health_server_callback**(*esp_ble_mesh_health_server_cb_t callback*)

Register BLE Mesh Health Server Model callback.

Return ESP_OK on success or error code otherwise.

Parameters

- `callback`: Pointer to the callback function.

esp_err_t **esp_ble_mesh_health_client_get_state**(*esp_ble_mesh_client_common_param_t* **params*, *esp_ble_mesh_health_client_get_state_t* **get_state*)

This function is called to get the Health Server states using the Health Client Model get messages.

Note If you want to find the opcodes and corresponding meanings accepted by this API, please refer to esp_ble_mesh_opcode_health_client_get_t in esp_ble_mesh_defs.h

Return ESP_OK on success or error code otherwise.

Parameters

- `params`: Pointer to BLE Mesh common client parameters.
- `get_state`: Pointer to a union, each kind of opcode corresponds to one structure inside. Shall not be set to NULL.

esp_err_t **esp_ble_mesh_health_client_set_state**(*esp_ble_mesh_client_common_param_t* **params*, *esp_ble_mesh_health_client_set_state_t* **set_state*)

This function is called to set the Health Server states using the Health Client Model set messages.

Note If you want to find the opcodes and corresponding meanings accepted by this API, please refer to esp_ble_mesh_opcode_health_client_set_t in esp_ble_mesh_defs.h

Return ESP_OK on success or error code otherwise.

Parameters

- `params`: Pointer to BLE Mesh common client parameters.
- `set_state`: Pointer to a union, each kind of opcode corresponds to one structure inside. Shall not be set to NULL.

esp_err_t **esp_ble_mesh_health_server_fault_update**(*esp_ble_mesh_elem_t* **element*)

This function is called by the Health Server Model to update the context of its Health Current status.

Return ESP_OK on success or error code otherwise.

Parameters

- `element`: The element to which the Health Server Model belongs.

Unions

union esp_ble_mesh_health_client_get_state_t

#include <esp_ble_mesh_health_model_api.h> For ESP_BLE_MESH_MODEL_OP_HEALTH_FAULT_GET ESP_BLE_MESH_MODEL_OP_ATTENTION_GET ESP_BLE_MESH_MODEL_OP_HEALTH_PERIOD_GE the get_state parameter in the esp_ble_mesh_health_client_get_state function should not be set to NULL.

Public Members

esp_ble_mesh_health_fault_get_t **fault_get**

For ESP_BLE_MESH_MODEL_OP_HEALTH_FAULT_GET.

union esp_ble_mesh_health_client_set_state_t

#include <esp_ble_mesh_health_model_api.h> For ESP_BLE_MESH_MODEL_OP_HEALTH_FAULT_CLEAR ESP_BLE_MESH_MODEL_OP_HEALTH_FAULT_CLEAR_UNACK ESP_BLE_MESH_MODEL_OP_HEALTH_FAULT_TEST ESP_BLE_MESH_MODEL_OP_HEALTH_FAULT ESP_BLE_MESH_MODEL_OP_HEALTH_PERIOD_SET ESP_BLE_MESH_MODEL_OP_HEALTH_PERIO ESP_BLE_MESH_MODEL_OP_ATTENTION_SET ESP_BLE_MESH_MODEL_OP_ATTENTION_SET_UN the set_state parameter in the esp_ble_mesh_health_client_set_state function should not be set to NULL.

Public Members

esp_ble_mesh_health_attention_set_t **attention_set**

For ESP_BLE_MESH_MODEL_OP_ATTENTION_SET or ESP_BLE_MESH_MODEL_OP_ATTENTION

esp_ble_mesh_health_period_set_t **period_set**

For ESP_BLE_MESH_MODEL_OP_HEALTH_PERIOD_SET or ESP_BLE_MESH_MODEL_OP_HEALTH_PERIOD_SET_UNACK.

esp_ble_mesh_health_fault_test_t **fault_test**

For ESP_BLE_MESH_MODEL_OP_HEALTH_FAULT_TEST or ESP_BLE_MESH_MODEL_OP_HEALTH_FAULT_TEST_UNACK.

esp_ble_mesh_health_fault_clear_t **fault_clear**

For ESP_BLE_MESH_MODEL_OP_HEALTH_FAULT_CLEAR or ESP_BLE_MESH_MODEL_OP_HEALTH_FAULT_CLEAR_UNACK.

union esp_ble_mesh_health_client_common_cb_param_t

#include <esp_ble_mesh_health_model_api.h> Health Client Model received message union.

Public Members

esp_ble_mesh_health_current_status_cb_t **current_status**

The health current status value

esp_ble_mesh_health_fault_status_cb_t **fault_status**

The health fault status value

esp_ble_mesh_health_period_status_cb_t **period_status**

The health period status value

esp_ble_mesh_health_attention_status_cb_t **attention_status**

The health attention status value

union esp_ble_mesh_health_server_cb_param_t

#include <esp_ble_mesh_health_model_api.h> Health Server Model callback parameters union.

Public Members

esp_ble_mesh_health_fault_update_comp_cb_t **fault_update_comp**

ESP_BLE_MESH_HEALTH_SERVER_FAULT_UPDATE_COMP_EVT

esp_ble_mesh_health_fault_clear_cb_t **fault_clear**

ESP_BLE_MESH_HEALTH_SERVER_FAULT_CLEAR_EVT

esp_ble_mesh_health_fault_test_cb_t **fault_test**

ESP_BLE_MESH_HEALTH_SERVER_FAULT_TEST_EVT

esp_ble_mesh_health_attention_on_cb_t **attention_on**
ESP_BLE_MESH_HEALTH_SERVER_ATTENTION_ON_EVT

esp_ble_mesh_health_attention_off_cb_t **attention_off**
ESP_BLE_MESH_HEALTH_SERVER_ATTENTION_OFF_EVT

Structures

struct esp_ble_mesh_health_srv_cb_t
ESP BLE Mesh Health Server callback

Public Members

esp_ble_mesh_cb_t **fault_clear**
Clear health registered faults. Initialized by the stack.

esp_ble_mesh_cb_t **fault_test**
Run a specific health test. Initialized by the stack.

esp_ble_mesh_cb_t **attention_on**
Health attention on callback. Initialized by the stack.

esp_ble_mesh_cb_t **attention_off**
Health attention off callback. Initialized by the stack.

struct esp_ble_mesh_health_test_t
ESP BLE Mesh Health Server test Context

Public Members

uint8_t **id_count**
Number of Health self-test ID

const uint8_t ***test_ids**
Array of Health self-test IDs

uint16_t **company_id**
Company ID used to identify the Health Fault state

uint8_t **prev_test_id**
Current test ID of the health fault test

uint8_t **current_faults**[**ESP_BLE_MESH_HEALTH_FAULT_ARRAY_SIZE**]
Array of current faults

uint8_t **registered_faults**[**ESP_BLE_MESH_HEALTH_FAULT_ARRAY_SIZE**]
Array of registered faults

struct esp_ble_mesh_health_srv_t

ESP BLE Mesh Health Server Model Context

Public Members

esp_ble_mesh_model_t ***model**

Pointer to Health Server Model

esp_ble_mesh_health_srv_cb_t **health_cb**

Health callback struct

struct k_delayed_work **attention_timer**

Attention Timer state

bool **attention_timer_start**

Attention Timer start flag

esp_ble_mesh_health_test_t **health_test**

Health Server fault test

struct esp_ble_mesh_health_fault_get_t

Parameter of Health Fault Get

Public Members

uint16_t **company_id**

Bluetooth assigned 16-bit Company ID

struct esp_ble_mesh_health_attention_set_t

Parameter of Health Attention Set

Public Members

uint8_t **attention**

Value of the Attention Timer state

struct esp_ble_mesh_health_period_set_t

Parameter of Health Period Set

Public Members

uint8_t **fast_period_divisor**

Divider for the Publish Period

struct esp_ble_mesh_health_fault_test_t

Parameter of Health Fault Test

Public Members

uint16_t **company_id**

Bluetooth assigned 16-bit Company ID

uint8_t **test_id**

ID of a specific test to be performed

struct esp_ble_mesh_health_fault_clear_t

Parameter of Health Fault Clear

Public Members

uint16_t **company_id**

Bluetooth assigned 16-bit Company ID

struct esp_ble_mesh_health_current_status_cb_t

Parameters of Health Current Status

Public Members

uint8_t **test_id**

ID of a most recently performed test

uint16_t **company_id**

Bluetooth assigned 16-bit Company ID

struct net_buf_simple ***fault_array**

FaultArray field contains a sequence of 1-octet fault values

struct esp_ble_mesh_health_fault_status_cb_t

Parameters of Health Fault Status

Public Members

uint8_t **test_id**

ID of a most recently performed test

uint16_t **company_id**

Bluetooth assigned 16-bit Company ID

struct net_buf_simple ***fault_array**

FaultArray field contains a sequence of 1-octet fault values

struct esp_ble_mesh_health_period_status_cb_t

Parameter of Health Period Status

Public Members

uint8_t **fast_period_divisor**

Divider for the Publish Period

struct esp_ble_mesh_health_attention_status_cb_t

Parameter of Health Attention Status

Public Members

uint8_t **attention**

Value of the Attention Timer state

struct esp_ble_mesh_health_client_cb_param_t

Health Client Model callback parameters

Public Members

int **error_code**

Appropriate error code

esp_ble_mesh_client_common_param_t ***params**

The client common parameters.

esp_ble_mesh_health_client_common_cb_param_t **status_cb**

The health message status callback values

struct esp_ble_mesh_health_fault_update_comp_cb_t

Parameter of publishing Health Current Status completion event

Public Members

int **error_code**

The result of publishing Health Current Status

esp_ble_mesh_elem_t ***element**

Pointer to the element which contains the Health Server Model

struct esp_ble_mesh_health_fault_clear_cb_t

Parameters of Health Fault Clear event

Public Members

esp_ble_mesh_model_t ***model**

Pointer to the Health Server Model

uint16_t **company_id**

Bluetooth assigned 16-bit Company ID

struct esp_ble_mesh_health_fault_test_cb_t

Parameters of Health Fault Test event

Public Members

esp_ble_mesh_model_t ***model**

Pointer to the Health Server Model

uint8_t **test_id**

ID of a specific test to be performed

uint16_t **company_id**

Bluetooth assigned 16-bit Company ID

struct esp_ble_mesh_health_attention_on_cb_t

Parameter of Health Attention On event

Public Members

esp_ble_mesh_model_t ***model**

Pointer to the Health Server Model

uint8_t **time**

Duration of attention timer on (in seconds)

struct esp_ble_mesh_health_attention_off_cb_t

Parameter of Health Attention Off event

Public Members

esp_ble_mesh_model_t ***model**

Pointer to the Health Server Model

Macros

ESP_BLE_MESH_MODEL_HEALTH_SRV(srv, pub)

Define a new Health Server Model.

Note The Health Server Model can only be included by a Primary Element.

Return New Health Server Model instance.

Parameters

- `srv`: Pointer to the unique struct *esp_ble_mesh_health_srv_t*.
- `pub`: Pointer to the unique struct *esp_ble_mesh_model_pub_t*.

`ESP_BLE_MESH_MODEL_HEALTH_CLI`(cli_data)

Define a new Health Client Model.

Note This API needs to be called for each element on which the application needs to have a Health Client Model.

Return New Health Client Model instance.

Parameters

- `cli_data`: Pointer to the unique struct *esp_ble_mesh_client_t*.

`ESP_BLE_MESH_HEALTH_PUB_DEFINE`(_name, _max, _role)

A helper to define a health publication context

Parameters

- `_name`: Name given to the publication context variable.
- `_max`: Maximum number of faults the element can have.
- `_role`: Role of the device which contains the model.

`ESP_BLE_MESH_HEALTH_STANDARD_TEST`

SIG identifier of Health Fault Test. 0x01 ~ 0xFF: Vendor Specific Test.

`ESP_BLE_MESH_NO_FAULT`

Fault values of Health Fault Test. 0x33 ~ 0x7F: Reserved for Future Use. 0x80 ~ 0xFF: Vendor Specific Warning/Error.

`ESP_BLE_MESH_BATTERY_LOW_WARNING`

`ESP_BLE_MESH_BATTERY_LOW_ERROR`

`ESP_BLE_MESH_SUPPLY_VOLTAGE_TOO_LOW_WARNING`

`ESP_BLE_MESH_SUPPLY_VOLTAGE_TOO_LOW_ERROR`

`ESP_BLE_MESH_SUPPLY_VOLTAGE_TOO_HIGH_WARNING`

`ESP_BLE_MESH_SUPPLY_VOLTAGE_TOO_HIGH_ERROR`

`ESP_BLE_MESH_POWER_SUPPLY_INTERRUPTED_WARNING`

`ESP_BLE_MESH_POWER_SUPPLY_INTERRUPTED_ERROR`

`ESP_BLE_MESH_NO_LOAD_WARNING`

`ESP_BLE_MESH_NO_LOAD_ERROR`

ESP_BLE_MESH_OVERLOAD_WARNING

ESP_BLE_MESH_OVERLOAD_ERROR

ESP_BLE_MESH_OVERHEAT_WARNING

ESP_BLE_MESH_OVERHEAT_ERROR

ESP_BLE_MESH_CONDENSATION_WARNING

ESP_BLE_MESH_CONDENSATION_ERROR

ESP_BLE_MESH_VIBRATION_WARNING

ESP_BLE_MESH_VIBRATION_ERROR

ESP_BLE_MESH_CONFIGURATION_WARNING

ESP_BLE_MESH_CONFIGURATION_ERROR

ESP_BLE_MESH_ELEMENT_NOT_CALIBRATED_WARNING

ESP_BLE_MESH_ELEMENT_NOT_CALIBRATED_ERROR

ESP_BLE_MESH_MEMORY_WARNING

ESP_BLE_MESH_MEMORY_ERROR

ESP_BLE_MESH_SELF_TEST_WARNING

ESP_BLE_MESH_SELF_TEST_ERROR

ESP_BLE_MESH_INPUT_TOO_LOW_WARNING

ESP_BLE_MESH_INPUT_TOO_LOW_ERROR

ESP_BLE_MESH_INPUT_TOO_HIGH_WARNING

ESP_BLE_MESH_INPUT_TOO_HIGH_ERROR

ESP_BLE_MESH_INPUT_NO_CHANGE_WARNING

ESP_BLE_MESH_INPUT_NO_CHANGE_ERROR

ESP_BLE_MESH_ACTUATOR_BLOCKED_WARNING

ESP_BLE_MESH_ACTUATOR_BLOCKED_ERROR

ESP_BLE_MESH_HOUSING_OPENED_WARNING

ESP_BLE_MESH_HOUSING_OPENED_ERROR

ESP_BLE_MESH_TAMPER_WARNING

ESP_BLE_MESH_TAMPER_ERROR

ESP_BLE_MESH_DEVICE_MOVED_WARNING

ESP_BLE_MESH_DEVICE_MOVED_ERROR

ESP_BLE_MESH_DEVICE_DROPPED_WARNING

ESP_BLE_MESH_DEVICE_DROPPED_ERROR

ESP_BLE_MESH_OVERFLOW_WARNING

ESP_BLE_MESH_OVERFLOW_ERROR

ESP_BLE_MESH_EMPTY_WARNING

ESP_BLE_MESH_EMPTY_ERROR

ESP_BLE_MESH_INTERNAL_BUS_WARNING

ESP_BLE_MESH_INTERNAL_BUS_ERROR

ESP_BLE_MESH_MECHANISM_JAMMED_WARNING

ESP_BLE_MESH_MECHANISM_JAMMED_ERROR

ESP_BLE_MESH_HEALTH_FAULT_ARRAY_SIZE

Type Definitions

typedef void (*esp_ble_mesh_health_client_cb_t)(*esp_ble_mesh_health_client_cb_event_t* event, *esp_ble_mesh_health_client_cb_param_t* *param)

Bluetooth Mesh Health Client and Server Model function.

Health Client Model callback function type

Parameters

- event: Event type
- param: Pointer to callback parameter

typedef void (*esp_ble_mesh_health_server_cb_t)(*esp_ble_mesh_health_server_cb_event_t* event, *esp_ble_mesh_health_server_cb_param_t* *param)

Health Server Model callback function type.

Parameters

- event: Event type
- param: Pointer to callback parameter

Enumerations

enum esp_ble_mesh_health_client_cb_event_t

This enum value is the event of Health Client Model

Values:

`ESP_BLE_MESH_HEALTH_CLIENT_GET_STATE_EVT`

`ESP_BLE_MESH_HEALTH_CLIENT_SET_STATE_EVT`

`ESP_BLE_MESH_HEALTH_CLIENT_PUBLISH_EVT`

`ESP_BLE_MESH_HEALTH_CLIENT_TIMEOUT_EVT`

`ESP_BLE_MESH_HEALTH_CLIENT_EVT_MAX`

enum esp_ble_mesh_health_server_cb_event_t

This enum value is the event of Health Server Model

Values:

`ESP_BLE_MESH_HEALTH_SERVER_FAULT_UPDATE_COMP_EVT`

`ESP_BLE_MESH_HEALTH_SERVER_FAULT_CLEAR_EVT`

`ESP_BLE_MESH_HEALTH_SERVER_FAULT_TEST_EVT`

`ESP_BLE_MESH_HEALTH_SERVER_ATTENTION_ON_EVT`

`ESP_BLE_MESH_HEALTH_SERVER_ATTENTION_OFF_EVT`

`ESP_BLE_MESH_HEALTH_SERVER_EVT_MAX`

Sensor Client/Server Models

Header File

- bt/esp_ble_mesh/api/models/include/esp_ble_mesh_lighting_model_api.h

Functions

esp_err_t **esp_ble_mesh_register_light_client_callback**(*esp_ble_mesh_light_client_cb_t callback*)

Register BLE Mesh Light Client Model callback.

Return ESP_OK on success or error code otherwise.

Parameters

- `callback`: pointer to the callback function.

esp_err_t **esp_ble_mesh_light_client_get_state**(*esp_ble_mesh_client_common_param_t* **params*, *esp_ble_mesh_light_client_get_state_t* **get_state*)

Get the value of Light Server Model states using the Light Client Model get messages.

Note If you want to know the opcodes and corresponding meanings accepted by this API, please refer to esp_ble_mesh_light_message_opcode_t in esp_ble_mesh_defs.h

Return ESP_OK on success or error code otherwise.

Parameters

- `params`: Pointer to BLE Mesh common client parameters.
- `get_state`: Pointer of light get message value. Shall not be set to NULL.

esp_err_t **esp_ble_mesh_light_client_set_state**(*esp_ble_mesh_client_common_param_t* **params*, *esp_ble_mesh_light_client_set_state_t* **set_state*)

Set the value of Light Server Model states using the Light Client Model set messages.

Note If you want to know the opcodes and corresponding meanings accepted by this API, please refer to esp_ble_mesh_light_message_opcode_t in esp_ble_mesh_defs.h

Return ESP_OK on success or error code otherwise.

Parameters

- `params`: Pointer to BLE Mesh common client parameters.
- `set_state`: Pointer of light set message value. Shall not be set to NULL.

esp_err_t **esp_ble_mesh_register_lighting_server_callback**(*esp_ble_mesh_lighting_server_cb_t* *callback*)

Register BLE Mesh Lighting Server Model callback.

Return ESP_OK on success or error code otherwise.

Parameters

- `callback`: Pointer to the callback function.

Unions

union esp_ble_mesh_light_client_get_state_t

#include <esp_ble_mesh_lighting_model_api.h> Lighting Client Model get message union.

Public Members

esp_ble_mesh_light_lc_property_get_t **lc_property_get**

For ESP_BLE_MESH_MODEL_OP_LIGHT_LC_PROPERTY_GET

union esp_ble_mesh_light_client_set_state_t

#include <esp_ble_mesh_lighting_model_api.h> Lighting Client Model set message union.

Public Members

esp_ble_mesh_light_lightness_set_t **lightness_set**

For ESP_BLE_MESH_MODEL_OP_LIGHT_LIGHTNESS_SET & ESP_BLE_MESH_MODEL_OP_LIGHT_LIGHTNESS_SET_UNACK

esp_ble_mesh_light_lightness_linear_set_t **lightness_linear_set**

For ESP_BLE_MESH_MODEL_OP_LIGHT_LIGHTNESS_LINEAR_SET & ESP_BLE_MESH_MODEL_OP_LIGHT_LIGHTNESS_LINEAR_SET_UNACK

esp_ble_mesh_light_lightness_default_set_t **lightness_default_set**

For ESP_BLE_MESH_MODEL_OP_LIGHT_LIGHTNESS_DEFAULT_SET & ESP_BLE_MESH_MODEL_OP_LIGHT_LIGHTNESS_DEFAULT_SET_UNACK

esp_ble_mesh_light_lightness_range_set_t **lightness_range_set**

For ESP_BLE_MESH_MODEL_OP_LIGHT_LIGHTNESS_RANGE_SET & ESP_BLE_MESH_MODEL_OP_LIGHT_LIGHTNESS_RANGE_SET_UNACK

esp_ble_mesh_light_ctl_set_t **ctl_set**

For ESP_BLE_MESH_MODEL_OP_LIGHT_CTL_SET & ESP_BLE_MESH_MODEL_OP_LIGHT_CTL_

esp_ble_mesh_light_ctl_temperature_set_t **ctl_temperature_set**

For ESP_BLE_MESH_MODEL_OP_LIGHT_CTL_TEMPERATURE_SET & ESP_BLE_MESH_MODEL_OP_LIGHT_CTL_TEMPERATURE_SET_UNACK

esp_ble_mesh_light_ctl_temperature_range_set_t **ctl_temperature_range_set**

For ESP_BLE_MESH_MODEL_OP_LIGHT_CTL_TEMPERATURE_RANGE_SET & ESP_BLE_MESH_MODEL_OP_LIGHT_CTL_TEMPERATURE_RANGE_SET_UNACK

esp_ble_mesh_light_ctl_default_set_t **ctl_default_set**

For ESP_BLE_MESH_MODEL_OP_LIGHT_CTL_DEFAULT_SET & ESP_BLE_MESH_MODEL_OP_LIGHT_CTL_DEFAULT_SET_UNACK

esp_ble_mesh_light_hsl_set_t **hsl_set**

For ESP_BLE_MESH_MODEL_OP_LIGHT_HSL_SET & ESP_BLE_MESH_MODEL_OP_LIGHT_HSL_

esp_ble_mesh_light_hsl_hue_set_t **hsl_hue_set**

For ESP_BLE_MESH_MODEL_OP_LIGHT_HSL_HUE_SET & ESP_BLE_MESH_MODEL_OP_LIGHT_HSL_HUE_SET_UNACK

esp_ble_mesh_light_hsl_saturation_set_t **hsl_saturation_set**

For ESP_BLE_MESH_MODEL_OP_LIGHT_HSL_SATURATION_SET & ESP_BLE_MESH_MODEL_OP_LIGHT_HSL_SATURATION_SET_UNACK

esp_ble_mesh_light_hsl_default_set_t **hsl_default_set**

For ESP_BLE_MESH_MODEL_OP_LIGHT_HSL_DEFAULT_SET & ESP_BLE_MESH_MODEL_OP_LIGHT_HSL_DEFAULT_SET_UNACK

esp_ble_mesh_light_hsl_range_set_t **hsl_range_set**
For ESP_BLE_MESH_MODEL_OP_LIGHT_HSL_RANGE_SET & ESP_BLE_MESH_MODEL_OP_LIGHT_HSL_RANGE_SET_UNACK

esp_ble_mesh_light_xyl_set_t **xyl_set**
For ESP_BLE_MESH_MODEL_OP_LIGHT_XYL_SET & ESP_BLE_MESH_MODEL_OP_LIGHT_XYL

esp_ble_mesh_light_xyl_default_set_t **xyl_default_set**
For ESP_BLE_MESH_MODEL_OP_LIGHT_XYL_DEFAULT_SET & ESP_BLE_MESH_MODEL_OP_LIGHT_XYL_DEFAULT_SET_UNACK

esp_ble_mesh_light_xyl_range_set_t **xyl_range_set**
For ESP_BLE_MESH_MODEL_OP_LIGHT_XYL_RANGE_SET & ESP_BLE_MESH_MODEL_OP_LIGHT_XYL_RANGE_SET_UNACK

esp_ble_mesh_light_lc_mode_set_t **lc_mode_set**
For ESP_BLE_MESH_MODEL_OP_LIGHT_LC_MODE_SET & ESP_BLE_MESH_MODEL_OP_LIGHT_LC_MODE_SET_UNACK

esp_ble_mesh_light_lc_om_set_t **lc_om_set**
For ESP_BLE_MESH_MODEL_OP_LIGHT_LC_OM_SET & ESP_BLE_MESH_MODEL_OP_LIGHT_LC_OM_SET_UNACK

esp_ble_mesh_light_lc_light_onoff_set_t **lc_light_onoff_set**
For ESP_BLE_MESH_MODEL_OP_LIGHT_LC_LIGHT_ONOFF_SET & ESP_BLE_MESH_MODEL_OP_LIGHT_LC_LIGHT_ONOFF_SET_UNACK

esp_ble_mesh_light_lc_property_set_t **lc_property_set**
For ESP_BLE_MESH_MODEL_OP_LIGHT_LC_PROPERTY_SET & ESP_BLE_MESH_MODEL_OP_LIGHT_LC_PROPERTY_SET_UNACK

union esp_ble_mesh_light_client_status_cb_t

#include <esp_ble_mesh_lighting_model_api.h> Lighting Client Model received message union.

Public Members

esp_ble_mesh_light_lightness_status_cb_t **lightness_status**
For ESP_BLE_MESH_MODEL_OP_LIGHT_LIGHTNESS_STATUS

esp_ble_mesh_light_lightness_linear_status_cb_t **lightness_linear_status**
For ESP_BLE_MESH_MODEL_OP_LIGHT_LIGHTNESS_LINEAR_STATUS

esp_ble_mesh_light_lightness_last_status_cb_t **lightness_last_status**
For ESP_BLE_MESH_MODEL_OP_LIGHT_LIGHTNESS_LAST_STATUS

esp_ble_mesh_light_lightness_default_status_cb_t **lightness_default_status**
For ESP_BLE_MESH_MODEL_OP_LIGHT_LIGHTNESS_DEFAULT_STATUS

esp_ble_mesh_light_lightness_range_status_cb_t **lightness_range_status**
For ESP_BLE_MESH_MODEL_OP_LIGHT_LIGHTNESS_RANGE_STATUS

esp_ble_mesh_light_ctl_status_cb_t **ctl_status**
For ESP_BLE_MESH_MODEL_OP_LIGHT_CTL_STATUS

esp_ble_mesh_light_ctl_temperature_status_cb_t **ctl_temperature_status**
For ESP_BLE_MESH_MODEL_OP_LIGHT_CTL_TEMPERATURE_STATUS

esp_ble_mesh_light_ctl_temperature_range_status_cb_t **ctl_temperature_range_status**
For ESP_BLE_MESH_MODEL_OP_LIGHT_CTL_TEMPERATURE_RANGE_STATUS

esp_ble_mesh_light_ctl_default_status_cb_t **ctl_default_status**
For ESP_BLE_MESH_MODEL_OP_LIGHT_CTL_DEFAULT_STATUS

esp_ble_mesh_light_hsl_status_cb_t **hsl_status**
For ESP_BLE_MESH_MODEL_OP_LIGHT_HSL_STATUS

esp_ble_mesh_light_hsl_target_status_cb_t **hsl_target_status**
For ESP_BLE_MESH_MODEL_OP_LIGHT_HSL_TARGET_STATUS

esp_ble_mesh_light_hsl_hue_status_cb_t **hsl_hue_status**
For ESP_BLE_MESH_MODEL_OP_LIGHT_HSL_HUE_STATUS

esp_ble_mesh_light_hsl_saturation_status_cb_t **hsl_saturation_status**
For ESP_BLE_MESH_MODEL_OP_LIGHT_HSL_SATURATION_STATUS

esp_ble_mesh_light_hsl_default_status_cb_t **hsl_default_status**
For ESP_BLE_MESH_MODEL_OP_LIGHT_HSL_DEFAULT_STATUS

esp_ble_mesh_light_hsl_range_status_cb_t **hsl_range_status**
For ESP_BLE_MESH_MODEL_OP_LIGHT_HSL_RANGE_STATUS

esp_ble_mesh_light_xyl_status_cb_t **xyl_status**
For ESP_BLE_MESH_MODEL_OP_LIGHT_XYL_STATUS

esp_ble_mesh_light_xyl_target_status_cb_t **xyl_target_status**
For ESP_BLE_MESH_MODEL_OP_LIGHT_XYL_TARGET_STATUS

esp_ble_mesh_light_xyl_default_status_cb_t **xyl_default_status**
For ESP_BLE_MESH_MODEL_OP_LIGHT_XYL_DEFAULT_STATUS

esp_ble_mesh_light_xyl_range_status_cb_t **xyl_range_status**
For ESP_BLE_MESH_MODEL_OP_LIGHT_XYL_RANGE_STATUS

esp_ble_mesh_light_lc_mode_status_cb_t **lc_mode_status**
For ESP_BLE_MESH_MODEL_OP_LIGHT_LC_MODE_STATUS

esp_ble_mesh_light_lc_om_status_cb_t **lc_om_status**
For ESP_BLE_MESH_MODEL_OP_LIGHT_LC_OM_STATUS

esp_ble_mesh_light_lc_light_onoff_status_cb_t **lc_light_onoff_status**

For ESP_BLE_MESH_MODEL_OP_LIGHT_LC_LIGHT_ONOFF_STATUS

esp_ble_mesh_light_lc_property_status_cb_t **lc_property_status**

For ESP_BLE_MESH_MODEL_OP_LIGHT_LC_PROPERTY_STATUS

union esp_ble_mesh_lighting_server_state_change_t

#include <esp_ble_mesh_lighting_model_api.h> Lighting Server Model state change value union.

Public Members

esp_ble_mesh_state_change_light_lightness_set_t **lightness_set**

The recv_op in ctx can be used to decide which state is changed.Light Lightness Set

esp_ble_mesh_state_change_light_lightness_linear_set_t **lightness_linear_set**

Light Lightness Linear Set

esp_ble_mesh_state_change_light_lightness_default_set_t **lightness_default_set**

Light Lightness Default Set

esp_ble_mesh_state_change_light_lightness_range_set_t **lightness_range_set**

Light Lightness Range Set

esp_ble_mesh_state_change_light_ctl_set_t **ctl_set**

Light CTL Set

esp_ble_mesh_state_change_light_ctl_temperature_set_t **ctl_temp_set**

Light CTL Temperature Set

esp_ble_mesh_state_change_light_ctl_temperature_range_set_t **ctl_temp_range_set**

Light CTL Temperature Range Set

esp_ble_mesh_state_change_light_ctl_default_set_t **ctl_default_set**

Light CTL Default Set

esp_ble_mesh_state_change_light_hsl_set_t **hsl_set**

Light HSL Set

esp_ble_mesh_state_change_light_hsl_hue_set_t **hsl_hue_set**

Light HSL Hue Set

esp_ble_mesh_state_change_light_hsl_saturation_set_t **hsl_saturation_set**

Light HSL Saturation Set

esp_ble_mesh_state_change_light_hsl_default_set_t **hsl_default_set**

Light HSL Default Set

esp_ble_mesh_state_change_light_hsl_range_set_t **hsl_range_set**

Light HSL Range Set

esp_ble_mesh_state_change_light_xyl_set_t **xyl_set**

Light xyL Set

esp_ble_mesh_state_change_light_xyl_default_set_t **xyl_default_set**

Light xyL Default Set

esp_ble_mesh_state_change_light_xyl_range_set_t **xyl_range_set**

Light xyL Range Set

esp_ble_mesh_state_change_light_lc_mode_set_t **lc_mode_set**

Light LC Mode Set

esp_ble_mesh_state_change_light_lc_om_set_t **lc_om_set**

Light LC Occupancy Mode Set

esp_ble_mesh_state_change_light_lc_light_onoff_set_t **lc_light_onoff_set**

Light LC Light OnOff Set

esp_ble_mesh_state_change_light_lc_property_set_t **lc_property_set**

Light LC Property Set

esp_ble_mesh_state_change_sensor_status_t **sensor_status**

Sensor Status

union esp_ble_mesh_lighting_server_recv_get_msg_t

#include <esp_ble_mesh_lighting_model_api.h> Lighting Server Model received get message union.

Public Members

esp_ble_mesh_server_recv_light_lc_property_get_t **lc_property**

Light LC Property Get

union esp_ble_mesh_lighting_server_recv_set_msg_t

#include <esp_ble_mesh_lighting_model_api.h> Lighting Server Model received set message union.

Public Members

esp_ble_mesh_server_recv_light_lightness_set_t **lightness**

Light Lightness Set/Light Lightness Set Unack

esp_ble_mesh_server_recv_light_lightness_linear_set_t **lightness_linear**

Light Lightness Linear Set/Light Lightness Linear Set Unack

esp_ble_mesh_server_recv_light_lightness_default_set_t **lightness_default**

Light Lightness Default Set/Light Lightness Default Set Unack

esp_ble_mesh_server_recv_light_lightness_range_set_t **lightness_range**

Light Lightness Range Set/Light Lightness Range Set Unack

esp_ble_mesh_server_recv_light_ctl_set_t **ctl**
Light CTL Set/Light CTL Set Unack

esp_ble_mesh_server_recv_light_ctl_temperature_set_t **ctl_temp**
Light CTL Temperature Set/Light CTL Temperature Set Unack

esp_ble_mesh_server_recv_light_ctl_temperature_range_set_t **ctl_temp_range**
Light CTL Temperature Range Set/Light CTL Temperature Range Set Unack

esp_ble_mesh_server_recv_light_ctl_default_set_t **ctl_default**
Light CTL Default Set/Light CTL Default Set Unack

esp_ble_mesh_server_recv_light_hsl_set_t **hsl**
Light HSL Set/Light HSL Set Unack

esp_ble_mesh_server_recv_light_hsl_hue_set_t **hsl_hue**
Light HSL Hue Set/Light HSL Hue Set Unack

esp_ble_mesh_server_recv_light_hsl_saturation_set_t **hsl_saturation**
Light HSL Saturation Set/Light HSL Saturation Set Unack

esp_ble_mesh_server_recv_light_hsl_default_set_t **hsl_default**
Light HSL Default Set/Light HSL Default Set Unack

esp_ble_mesh_server_recv_light_hsl_range_set_t **hsl_range**
Light HSL Range Set/Light HSL Range Set Unack

esp_ble_mesh_server_recv_light_xyl_set_t **xyl**
Light xyL Set/Light xyL Set Unack

esp_ble_mesh_server_recv_light_xyl_default_set_t **xyl_default**
Light xyL Default Set/Light xyL Default Set Unack

esp_ble_mesh_server_recv_light_xyl_range_set_t **xyl_range**
Light xyL Range Set/Light xyL Range Set Unack

esp_ble_mesh_server_recv_light_lc_mode_set_t **lc_mode**
Light LC Mode Set/Light LC Mode Set Unack

esp_ble_mesh_server_recv_light_lc_om_set_t **lc_om**
Light LC OM Set/Light LC OM Set Unack

esp_ble_mesh_server_recv_light_lc_light_onoff_set_t **lc_light_onoff**
Light LC Light OnOff Set/Light LC Light OnOff Set Unack

esp_ble_mesh_server_recv_light_lc_property_set_t **lc_property**
Light LC Property Set/Light LC Property Set Unack

union esp_ble_mesh_lighting_server_recv_status_msg_t
#include <esp_ble_mesh_lighting_model_api.h> Lighting Server Model received status message union.

Public Members

esp_ble_mesh_server_recv_sensor_status_t **sensor_status**

Sensor Status

union esp_ble_mesh_lighting_server_cb_value_t

#include <esp_ble_mesh_lighting_model_api.h> Lighting Server Model callback value union.

Public Members

esp_ble_mesh_lighting_server_state_change_t **state_change**

ESP_BLE_MESH_LIGHTING_SERVER_STATE_CHANGE_EVT

esp_ble_mesh_lighting_server_recv_get_msg_t **get**

ESP_BLE_MESH_LIGHTING_SERVER_RECV_GET_MSG_EVT

esp_ble_mesh_lighting_server_recv_set_msg_t **set**

ESP_BLE_MESH_LIGHTING_SERVER_RECV_SET_MSG_EVT

esp_ble_mesh_lighting_server_recv_status_msg_t **status**

ESP_BLE_MESH_LIGHTING_SERVER_RECV_STATUS_MSG_EVT

Structures

struct esp_ble_mesh_light_lightness_set_t

Bluetooth Mesh Light Lightness Client Model Get and Set parameters structure.

Parameters of Light Lightness Set

Public Members

bool **op_en**

Indicate if optional parameters are included

uint16_t **lightness**

Target value of light lightness actual state

uint8_t **tid**

Transaction ID

uint8_t **trans_time**

Time to complete state transition (optional)

uint8_t **delay**

Indicate message execution delay (C.1)

struct esp_ble_mesh_light_lightness_linear_set_t

Parameters of Light Lightness Linear Set

Public Members

bool **op_en**

Indicate if optional parameters are included

uint16_t **lightness**

Target value of light lightness linear state

uint8_t **tid**

Transaction ID

uint8_t **trans_time**

Time to complete state transition (optional)

uint8_t **delay**

Indicate message execution delay (C.1)

struct esp_ble_mesh_light_lightness_default_set_t

Parameter of Light Lightness Default Set

Public Members

uint16_t **lightness**

The value of the Light Lightness Default state

struct esp_ble_mesh_light_lightness_range_set_t

Parameters of Light Lightness Range Set

Public Members

uint16_t **range_min**

Value of range min field of light lightness range state

uint16_t **range_max**

Value of range max field of light lightness range state

struct esp_ble_mesh_light_ctl_set_t

Parameters of Light CTL Set

Public Members

bool **op_en**

Indicate if optional parameters are included

uint16_t **ctl_lightness**

Target value of light ctl lightness state

uint16_t **ctl_temperatrue**
Target value of light ctl temperature state

int16_t **ctl_delta_uv**
Target value of light ctl delta UV state

uint8_t **tid**
Transaction ID

uint8_t **trans_time**
Time to complete state transition (optional)

uint8_t **delay**
Indicate message execution delay (C.1)

struct esp_ble_mesh_light_ctl_temperature_set_t
Parameters of Light CTL Temperature Set

Public Members

bool **op_en**
Indicate if optional parameters are included

uint16_t **ctl_temperatrue**
Target value of light ctl temperature state

int16_t **ctl_delta_uv**
Target value of light ctl delta UV state

uint8_t **tid**
Transaction ID

uint8_t **trans_time**
Time to complete state transition (optional)

uint8_t **delay**
Indicate message execution delay (C.1)

struct esp_ble_mesh_light_ctl_temperature_range_set_t
Parameters of Light CTL Temperature Range Set

Public Members

uint16_t **range_min**
Value of temperature range min field of light ctl temperature range state

uint16_t **range_max**
Value of temperature range max field of light ctl temperature range state

struct esp_ble_mesh_light_ctl_default_set_t

Parameters of Light CTL Default Set

Public Members

uint16_t **lightness**

Value of light lightness default state

uint16_t **temperature**

Value of light temperature default state

int16_t **delta_uv**

Value of light delta UV default state

struct esp_ble_mesh_light_hsl_set_t

Parameters of Light HSL Set

Public Members

bool **op_en**

Indicate if optional parameters are included

uint16_t **hsl_lightness**

Target value of light hsl lightness state

uint16_t **hsl_hue**

Target value of light hsl hue state

uint16_t **hsl_saturation**

Target value of light hsl saturation state

uint8_t **tid**

Transaction ID

uint8_t **trans_time**

Time to complete state transition (optional)

uint8_t **delay**

Indicate message execution delay (C.1)

struct esp_ble_mesh_light_hsl_hue_set_t

Parameters of Light HSL Hue Set

Public Members

bool **op_en**

Indicate if optional parameters are included

uint16_t **hue**

Target value of light hsl hue state

uint8_t **tid**

Transaction ID

uint8_t **trans_time**

Time to complete state transition (optional)

uint8_t **delay**

Indicate message execution delay (C.1)

struct esp_ble_mesh_light_hsl_saturation_set_t

Parameters of Light HSL Saturation Set

Public Members

bool **op_en**

Indicate if optional parameters are included

uint16_t **saturation**

Target value of light hsl hue state

uint8_t **tid**

Transaction ID

uint8_t **trans_time**

Time to complete state transition (optional)

uint8_t **delay**

Indicate message execution delay (C.1)

struct esp_ble_mesh_light_hsl_default_set_t

Parameters of Light HSL Default Set

Public Members

uint16_t **lightness**

Value of light lightness default state

uint16_t **hue**

Value of light hue default state

uint16_t **saturation**

Value of light saturation default state

struct esp_ble_mesh_light_hsl_range_set_t

Parameters of Light HSL Range Set

Public Members

uint16_t **hue_range_min**

Value of hue range min field of light hsl hue range state

uint16_t **hue_range_max**

Value of hue range max field of light hsl hue range state

uint16_t **saturation_range_min**

Value of saturation range min field of light hsl saturation range state

uint16_t **saturation_range_max**

Value of saturation range max field of light hsl saturation range state

struct esp_ble_mesh_light_xyl_set_t

Parameters of Light xyL Set

Public Members

bool **op_en**

Indicate whether optional parameters included

uint16_t **xyl_lightness**

The target value of the Light xyL Lightness state

uint16_t **xyl_x**

The target value of the Light xyL x state

uint16_t **xyl_y**

The target value of the Light xyL y state

uint8_t **tid**

Transaction Identifier

uint8_t **trans_time**

Time to complete state transition (optional)

uint8_t **delay**

Indicate message execution delay (C.1)

struct esp_ble_mesh_light_xyl_default_set_t

Parameters of Light xyL Default Set

Public Members

uint16_t **lightness**

The value of the Light Lightness Default state

uint16_t **xyl_x**

The value of the Light xyL x Default state

uint16_t **xyl_y**

The value of the Light xyL y Default state

struct esp_ble_mesh_light_xyl_range_set_t

Parameters of Light xyL Range Set

Public Members

uint16_t **xyl_x_range_min**

The value of the xyL x Range Min field of the Light xyL x Range state

uint16_t **xyl_x_range_max**

The value of the xyL x Range Max field of the Light xyL x Range state

uint16_t **xyl_y_range_min**

The value of the xyL y Range Min field of the Light xyL y Range state

uint16_t **xyl_y_range_max**

The value of the xyL y Range Max field of the Light xyL y Range state

struct esp_ble_mesh_light_lc_mode_set_t

Parameter of Light LC Mode Set

Public Members

uint8_t **mode**

The target value of the Light LC Mode state

struct esp_ble_mesh_light_lc_om_set_t

Parameter of Light LC OM Set

Public Members

uint8_t **mode**

The target value of the Light LC Occupancy Mode state

struct esp_ble_mesh_light_lc_light_onoff_set_t

Parameters of Light LC Light OnOff Set

Public Members

bool **op_en**

Indicate whether optional parameters included

uint8_t **light_onoff**

The target value of the Light LC Light OnOff state

uint8_t **tid**

Transaction Identifier

uint8_t **trans_time**

Time to complete state transition (optional)

uint8_t **delay**

Indicate message execution delay (C.1)

struct esp_ble_mesh_light_lc_property_get_t

Parameter of Light LC Property Get

Public Members

uint16_t **property_id**

Property ID identifying a Light LC Property

struct esp_ble_mesh_light_lc_property_set_t

Parameters of Light LC Property Set

Public Members

uint16_t **property_id**

Property ID identifying a Light LC Property

struct net_buf_simple ***property_value**

Raw value for the Light LC Property

struct esp_ble_mesh_light_lightness_status_cb_t

Bluetooth Mesh Light Lightness Client Model Get and Set callback parameters structure.

Parameters of Light Lightness Status

Public Members

bool **op_en**

Indicate if optional parameters are included

uint16_t **present_lightness**

Current value of light lightness actual state

uint16_t **target_lightness**

Target value of light lightness actual state (optional)

uint8_t **remain_time**

Time to complete state transition (C.1)

struct esp_ble_mesh_light_lightness_linear_status_cb_t

Parameters of Light Lightness Linear Status

Public Members

bool **op_en**

Indicate if optional parameters are included

uint16_t **present_lightness**

Current value of light lightness linear state

uint16_t **target_lightness**

Target value of light lightness linear state (optional)

uint8_t **remain_time**

Time to complete state transition (C.1)

struct esp_ble_mesh_light_lightness_last_status_cb_t

Parameter of Light Lightness Last Status

Public Members

uint16_t **lightness**

The value of the Light Lightness Last state

struct esp_ble_mesh_light_lightness_default_status_cb_t

Parameter of Light Lightness Default Status

Public Members

uint16_t **lightness**

The value of the Light Lightness default State

struct esp_ble_mesh_light_lightness_range_status_cb_t

Parameters of Light Lightness Range Status

Public Members

uint8_t **status_code**

Status Code for the request message

uint16_t **range_min**

Value of range min field of light lightness range state

uint16_t **range_max**

Value of range max field of light lightness range state

struct esp_ble_mesh_light_ctl_status_cb_t

Parameters of Light CTL Status

Public Members

bool **op_en**

Indicate if optional parameters are included

uint16_t **present_ctl_lightness**

Current value of light ctl lightness state

uint16_t **present_ctl_temperature**

Current value of light ctl temperature state

uint16_t **target_ctl_lightness**

Target value of light ctl lightness state (optional)

uint16_t **target_ctl_temperature**

Target value of light ctl temperature state (C.1)

uint8_t **remain_time**

Time to complete state transition (C.1)

struct esp_ble_mesh_light_ctl_temperature_status_cb_t

Parameters of Light CTL Temperature Status

Public Members

bool **op_en**

Indicate if optional parameters are included

uint16_t **present_ctl_temperature**

Current value of light ctl temperature state

uint16_t **present_ctl_delta_uv**

Current value of light ctl delta UV state

uint16_t **target_ctl_temperature**

Target value of light ctl temperature state (optional)

uint16_t **target_ctl_delta_uv**

Target value of light ctl delta UV state (C.1)

uint8_t **remain_time**

Time to complete state transition (C.1)

struct esp_ble_mesh_light_ctl_temperature_range_status_cb_t

Parameters of Light CTL Temperature Range Status

Public Members

uint8_t **status_code**

Status code for the request message

uint16_t **range_min**

Value of temperature range min field of light ctl temperature range state

uint16_t **range_max**

Value of temperature range max field of light ctl temperature range state

struct esp_ble_mesh_light_ctl_default_status_cb_t

Parameters of Light CTL Default Status

Public Members

uint16_t **lightness**

Value of light lightness default state

uint16_t **temperature**

Value of light temperature default state

int16_t **delta_uv**

Value of light delta UV default state

struct esp_ble_mesh_light_hsl_status_cb_t

Parameters of Light HSL Status

Public Members

bool **op_en**

Indicate if optional parameters are included

uint16_t **hsl_lightness**

Current value of light hsl lightness state

uint16_t **hsl_hue**

Current value of light hsl hue state

uint16_t **hsl_saturation**

Current value of light hsl saturation state

uint8_t **remain_time**

Time to complete state transition (optional)

struct esp_ble_mesh_light_hsl_target_status_cb_t

Parameters of Light HSL Target Status

Public Members

bool op_en

Indicate if optional parameters are included

uint16_t hsl_lightness_target

Target value of light hsl lightness state

uint16_t hsl_hue_target

Target value of light hsl hue state

uint16_t hsl_saturation_target

Target value of light hsl saturation state

uint8_t remain_time

Time to complete state transition (optional)

struct esp_ble_mesh_light_hsl_hue_status_cb_t

Parameters of Light HSL Hue Status

Public Members

bool op_en

Indicate if optional parameters are included

uint16_t present_hue

Current value of light hsl hue state

uint16_t target_hue

Target value of light hsl hue state (optional)

uint8_t remain_time

Time to complete state transition (C.1)

struct esp_ble_mesh_light_hsl_saturation_status_cb_t

Parameters of Light HSL Saturation Status

Public Members

bool op_en

Indicate if optional parameters are included

uint16_t present_saturation

Current value of light hsl saturation state

uint16_t **target_saturation**

Target value of light hsl saturation state (optional)

uint8_t **remain_time**

Time to complete state transition (C.1)

struct esp_ble_mesh_light_hsl_default_status_cb_t

Parameters of Light HSL Default Status

Public Members

uint16_t **lightness**

Value of light lightness default state

uint16_t **hue**

Value of light hue default state

uint16_t **saturation**

Value of light saturation default state

struct esp_ble_mesh_light_hsl_range_status_cb_t

Parameters of Light HSL Range Status

Public Members

uint8_t **status_code**

Status code for the request message

uint16_t **hue_range_min**

Value of hue range min field of light hsl hue range state

uint16_t **hue_range_max**

Value of hue range max field of light hsl hue range state

uint16_t **saturation_range_min**

Value of saturation range min field of light hsl saturation range state

uint16_t **saturation_range_max**

Value of saturation range max field of light hsl saturation range state

struct esp_ble_mesh_light_xyl_status_cb_t

Parameters of Light xyL Status

Public Members

bool **op_en**

Indicate whether optional parameters included

uint16_t **xyl_lightness**

The present value of the Light xyL Lightness state

uint16_t **xyl_x**

The present value of the Light xyL x state

uint16_t **xyl_y**

The present value of the Light xyL y state

uint8_t **remain_time**

Time to complete state transition (optional)

struct esp_ble_mesh_light_xyl_target_status_cb_t

Parameters of Light xyL Target Status

Public Members

bool **op_en**

Indicate whether optional parameters included

uint16_t **target_xyl_lightness**

The target value of the Light xyL Lightness state

uint16_t **target_xyl_x**

The target value of the Light xyL x state

uint16_t **target_xyl_y**

The target value of the Light xyL y state

uint8_t **remain_time**

Time to complete state transition (optional)

struct esp_ble_mesh_light_xyl_default_status_cb_t

Parameters of Light xyL Default Status

Public Members

uint16_t **lightness**

The value of the Light Lightness Default state

uint16_t **xyl_x**

The value of the Light xyL x Default state

uint16_t **xyl_y**

The value of the Light xyL y Default state

struct esp_ble_mesh_light_xyl_range_status_cb_t

Parameters of Light xyL Range Status

Public Members

uint8_t **status_code**

Status Code for the requesting message

uint16_t **xyl_x_range_min**

The value of the xyL x Range Min field of the Light xyL x Range state

uint16_t **xyl_x_range_max**

The value of the xyL x Range Max field of the Light xyL x Range state

uint16_t **xyl_y_range_min**

The value of the xyL y Range Min field of the Light xyL y Range state

uint16_t **xyl_y_range_max**

The value of the xyL y Range Max field of the Light xyL y Range state

struct esp_ble_mesh_light_lc_mode_status_cb_t

Parameter of Light LC Mode Status

Public Members

uint8_t **mode**

The present value of the Light LC Mode state

struct esp_ble_mesh_light_lc_om_status_cb_t

Parameter of Light LC OM Status

Public Members

uint8_t **mode**

The present value of the Light LC Occupancy Mode state

struct esp_ble_mesh_light_lc_light_onoff_status_cb_t

Parameters of Light LC Light OnOff Status

Public Members

bool **op_en**

Indicate whether optional parameters included

uint8_t **present_light_onoff**

The present value of the Light LC Light OnOff state

uint8_t **target_light_onoff**

The target value of the Light LC Light OnOff state (Optional)

uint8_t **remain_time**

Time to complete state transition (C.1)

struct esp_ble_mesh_light_lc_property_status_cb_t

Parameters of Light LC Property Status

Public Members

uint16_t **property_id**

Property ID identifying a Light LC Property

struct net_buf_simple ***property_value**

Raw value for the Light LC Property

struct esp_ble_mesh_light_client_cb_param_t

Lighting Client Model callback parameters

Public Members

int **error_code**

Appropriate error code

esp_ble_mesh_client_common_param_t ***params**

The client common parameters.

esp_ble_mesh_light_client_status_cb_t **status_cb**

The light status message callback values

struct esp_ble_mesh_light_lightness_state_t

Parameters of Light Lightness state

Public Members

uint16_t **lightness_linear**

The present value of Light Lightness Linear state

uint16_t **target_lightness_linear**

The target value of Light Lightness Linear state

uint16_t **lightness_actual**

The present value of Light Lightness Actual state

uint16_t **target_lightness_actual**

The target value of Light Lightness Actual state

uint16_t **lightness_last**

The value of Light Lightness Last state

uint16_t **lightness_default**

The value of Light Lightness Default state

uint8_t **status_code**

The status code of setting Light Lightness Range state

uint16_t **lightness_range_min**

The minimum value of Light Lightness Range state

uint16_t **lightness_range_max**

The maximum value of Light Lightness Range state

struct esp_ble_mesh_light_lightness_srv_t

User data of Light Lightness Server Model

Public Members

esp_ble_mesh_model_t ***model**

Pointer to the Lighting Lightness Server Model. Initialized internally.

esp_ble_mesh_server_rsp_ctrl_t **rsp_ctrl**

Response control of the server model received messages

esp_ble_mesh_light_lightness_state_t ***state**

Parameters of the Light Lightness state

esp_ble_mesh_last_msg_info_t **last**

Parameters of the last received set message

esp_ble_mesh_state_transition_t **actual_transition**

Parameters of state transition

esp_ble_mesh_state_transition_t **linear_transition**

Parameters of state transition

int32_t **tt_delta_lightness_actual**

Delta change value of lightness actual state transition

int32_t **tt_delta_lightness_linear**

Delta change value of lightness linear state transition

struct esp_ble_mesh_light_lightness_setup_srv_t

User data of Light Lightness Setup Server Model

Public Members

esp_ble_mesh_model_t ***model**

Pointer to the Lighting Lightness Setup Server Model. Initialized internally.

esp_ble_mesh_server_rsp_ctrl_t **rsp_ctrl**

Response control of the server model received messages

esp_ble_mesh_light_lightness_state_t ***state**

Parameters of the Light Lightness state

struct esp_ble_mesh_light_ctl_state_t

Parameters of Light CTL state

Public Members

uint16_t **lightness**

The present value of Light CTL Lightness state

uint16_t **target_lightness**

The target value of Light CTL Lightness state

uint16_t **temperature**

The present value of Light CTL Temperature state

uint16_t **target_temperature**

The target value of Light CTL Temperature state

int16_t **delta_uv**

The present value of Light CTL Delta UV state

int16_t **target_delta_uv**

The target value of Light CTL Delta UV state

uint8_t **status_code**

The statue code of setting Light CTL Temperature Range state

uint16_t **temperature_range_min**

The minimum value of Light CTL Temperature Range state

uint16_t **temperature_range_max**

The maximum value of Light CTL Temperature Range state

uint16_t **lightness_default**

The value of Light Lightness Default state

uint16_t **temperature_default**

The value of Light CTL Temperature Default state

int16_t **delta_uv_default**

The value of Light CTL Delta UV Default state

struct esp_ble_mesh_light_ctl_srv_t

User data of Light CTL Server Model

Public Members

esp_ble_mesh_model_t ***model**

Pointer to the Lighting CTL Server Model. Initialized internally.

esp_ble_mesh_server_rsp_ctrl_t **rsp_ctrl**

Response control of the server model received messages

esp_ble_mesh_light_ctl_state_t ***state**

Parameters of the Light CTL state

esp_ble_mesh_last_msg_info_t **last**

Parameters of the last received set message

esp_ble_mesh_state_transition_t **transition**

Parameters of state transition

int32_t **tt_delta_lightness**

Delta change value of lightness state transition

int32_t **tt_delta_temperature**

Delta change value of temperature state transition

int32_t **tt_delta_delta_uv**

Delta change value of delta uv state transition

struct esp_ble_mesh_light_ctl_setup_srv_t

User data of Light CTL Setup Server Model

Public Members

esp_ble_mesh_model_t ***model**

Pointer to the Lighting CTL Setup Server Model. Initialized internally.

esp_ble_mesh_server_rsp_ctrl_t **rsp_ctrl**

Response control of the server model received messages

esp_ble_mesh_light_ctl_state_t ***state**

Parameters of the Light CTL state

struct esp_ble_mesh_light_ctl_temp_srv_t

User data of Light CTL Temperature Server Model

Public Members

esp_ble_mesh_model_t ***model**

Pointer to the Lighting CTL Temperature Server Model. Initialized internally.

esp_ble_mesh_server_rsp_ctrl_t **rsp_ctrl**

Response control of the server model received messages

esp_ble_mesh_light_ctl_state_t ***state**

Parameters of the Light CTL state

esp_ble_mesh_last_msg_info_t **last**

Parameters of the last received set message

esp_ble_mesh_state_transition_t **transition**

Parameters of state transition

int32_t **tt_delta_temperature**

Delta change value of temperature state transition

int32_t **tt_delta_delta_uv**

Delta change value of delta uv state transition

struct esp_ble_mesh_light_hsl_state_t

Parameters of Light HSL state

Public Members

uint16_t **lightness**

The present value of Light HSL Lightness state

uint16_t **target_lightness**

The target value of Light HSL Lightness state

uint16_t **hue**

The present value of Light HSL Hue state

uint16_t **target_hue**

The target value of Light HSL Hue state

uint16_t **saturation**

The present value of Light HSL Saturation state

uint16_t **target_saturation**

The target value of Light HSL Saturation state

uint16_t **lightness_default**

The value of Light Lightness Default state

uint16_t **hue_default**

The value of Light HSL Hue Default state

uint16_t **saturation_default**

The value of Light HSL Saturation Default state

uint8_t **status_code**

The status code of setting Light HSL Hue & Saturation Range state

uint16_t **hue_range_min**

The minimum value of Light HSL Hue Range state

uint16_t **hue_range_max**

The maximum value of Light HSL Hue Range state

uint16_t **saturation_range_min**

The minimum value of Light HSL Saturation state

uint16_t **saturation_range_max**

The maximum value of Light HSL Saturation state

struct esp_ble_mesh_light_hsl_srv_t

User data of Light HSL Server Model

Public Members

esp_ble_mesh_model_t ***model**

Pointer to the Lighting HSL Server Model. Initialized internally.

esp_ble_mesh_server_rsp_ctrl_t **rsp_ctrl**

Response control of the server model received messages

esp_ble_mesh_light_hsl_state_t ***state**

Parameters of the Light HSL state

esp_ble_mesh_last_msg_info_t **last**

Parameters of the last received set message

esp_ble_mesh_state_transition_t **transition**

Parameters of state transition

int32_t **tt_delta_lightness**

Delta change value of lightness state transition

int32_t **tt_delta_hue**

Delta change value of hue state transition

int32_t **tt_delta_saturation**

Delta change value of saturation state transition

struct esp_ble_mesh_light_hsl_setup_srv_t

User data of Light HSL Setup Server Model

Public Members

esp_ble_mesh_model_t ***model**

Pointer to the Lighting HSL Setup Server Model. Initialized internally.

esp_ble_mesh_server_rsp_ctrl_t **rsp_ctrl**

Response control of the server model received messages

esp_ble_mesh_light_hsl_state_t ***state**

Parameters of the Light HSL state

struct esp_ble_mesh_light_hsl_hue_srv_t

User data of Light HSL Hue Server Model

Public Members

esp_ble_mesh_model_t ***model**

Pointer to the Lighting HSL Hue Server Model. Initialized internally.

esp_ble_mesh_server_rsp_ctrl_t **rsp_ctrl**

Response control of the server model received messages

esp_ble_mesh_light_hsl_state_t ***state**

Parameters of the Light HSL state

esp_ble_mesh_last_msg_info_t **last**

Parameters of the last received set message

esp_ble_mesh_state_transition_t **transition**

Parameters of state transition

int32_t **tt_delta_hue**

Delta change value of hue state transition

struct esp_ble_mesh_light_hsl_sat_srv_t

User data of Light HSL Saturation Server Model

Public Members

esp_ble_mesh_model_t ***model**

Pointer to the Lighting HSL Saturation Server Model. Initialized internally.

esp_ble_mesh_server_rsp_ctrl_t **rsp_ctrl**

Response control of the server model received messages

esp_ble_mesh_light_hsl_state_t ***state**

Parameters of the Light HSL state

esp_ble_mesh_last_msg_info_t **last**

Parameters of the last received set message

esp_ble_mesh_state_transition_t **transition**

Parameters of state transition

int32_t **tt_delta_saturation**

Delta change value of saturation state transition

struct esp_ble_mesh_light_xyl_state_t

Parameters of Light xyL state

Public Members

uint16_t **lightness**

The present value of Light xyL Lightness state

uint16_t **target_lightness**

The target value of Light xyL Lightness state

uint16_t **x**

The present value of Light xyL x state

uint16_t **target_x**

The target value of Light xyL x state

uint16_t **y**

The present value of Light xyL y state

uint16_t **target_y**

The target value of Light xyL y state

uint16_t **lightness_default**

The value of Light Lightness Default state

uint16_t **x_default**

The value of Light xyL x Default state

uint16_t **y_default**

The value of Light xyL y Default state

uint8_t **status_code**

The status code of setting Light xyL x & y Range state

uint16_t **x_range_min**

The minimum value of Light xyL x Range state

uint16_t **x_range_max**

The maximum value of Light xyL x Range state

uint16_t **y_range_min**

The minimum value of Light xyL y Range state

uint16_t **y_range_max**

The maximum value of Light xyL y Range state

struct esp_ble_mesh_light_xyl_srv_t

User data of Light xyL Server Model

Public Members

esp_ble_mesh_model_t ***model**

Pointer to the Lighting xyL Server Model. Initialized internally.

esp_ble_mesh_server_rsp_ctrl_t **rsp_ctrl**

Response control of the server model received messages

esp_ble_mesh_light_xyl_state_t ***state**

Parameters of the Light xyL state

esp_ble_mesh_last_msg_info_t **last**

Parameters of the last received set message

esp_ble_mesh_state_transition_t **transition**

Parameters of state transition

int32_t **tt_delta_lightness**

Delta change value of lightness state transition

int32_t **tt_delta_x**

Delta change value of x state transition

int32_t **tt_delta_y**

Delta change value of y state transition

struct esp_ble_mesh_light_xyl_setup_srv_t

User data of Light xyL Setup Server Model

Public Members

esp_ble_mesh_model_t ***model**

Pointer to the Lighting xyL Setup Server Model. Initialized internally.

esp_ble_mesh_server_rsp_ctrl_t **rsp_ctrl**

Response control of the server model received messages

esp_ble_mesh_light_xyl_state_t ***state**

Parameters of the Light xyL state

struct esp_ble_mesh_light_lc_state_t

Parameters of Light LC states

Public Members

uint32_t **mode**

0b0 The controller is turned off.

- The binding with the Light Lightness state is disabled. 0b1 The controller is turned on.
- The binding with the Light Lightness state is enabled.The value of Light LC Mode state

uint32_t **occupancy_mode**

The value of Light LC Occupancy Mode state

uint32_t **light_onoff**

The present value of Light LC Light OnOff state

uint32_t **target_light_onoff**

The target value of Light LC Light OnOff state

uint32_t **occupancy**

The value of Light LC Occupancy state

uint32_t **ambient_luxlevel**

The value of Light LC Ambient LuxLevel state

uint16_t **linear_output**

1. Light LC Linear Output = max((Lightness Out)^2/65535, Regulator Output)
2. If the Light LC Mode state is set to 0b1, the binding is enabled and upon a change of the Light LC Linear Output state, the following operation shall be performed: Light Lightness Linear = Light LC Linear Output
3. If the Light LC Mode state is set to 0b0, the binding is disabled (i.e., upon a change of the Light LC Linear Output state, no operation on the Light Lightness Linear state is performed).The value of Light LC Linear Output state

struct esp_ble_mesh_light_lc_property_state_t

Parameters of Light Property states. The Light LC Property states are read / write states that determine the configuration of a Light Lightness Controller. Each state is represented by a device property and is controlled by Light LC Property messages.

Public Members

uint32_t **time_occupancy_delay**

A timing state that determines the delay for changing the Light LC Occupancy state upon receiv-

ing a Sensor Status message from an occupancy sensor.The value of Light LC Time Occupancy Delay state

uint32_t **time_fade_on**

A timing state that determines the time the controlled lights fade to the level determined by the Light LC Lightness On state.The value of Light LC Time Fade On state

uint32_t **time_run_on**

A timing state that determines the time the controlled lights stay at the level determined by the Light LC Lightness On state.The value of Light LC Time Run On state

uint32_t **time_fade**

A timing state that determines the time the controlled lights fade from the level determined by the Light LC Lightness On state to the level determined by the Light Lightness Prolong state.The value of Light LC Time Fade state

uint32_t **time_prolong**

A timing state that determines the time the controlled lights stay at the level determined by the Light LC Lightness Prolong state.The value of Light LC Time Prolong state

uint32_t **time_fade_standby_auto**

A timing state that determines the time the controlled lights fade from the level determined by the Light LC Lightness Prolong state to the level determined by the Light LC Lightness Standby state when the transition is automatic.The value of Light LC Time Fade Standby Auto state

uint32_t **time_fade_standby_manual**

A timing state that determines the time the controlled lights fade from the level determined by the Light LC Lightness Prolong state to the level determined by the Light LC Lightness Standby state when the transition is triggered by a change in the Light LC Light OnOff state.The value of Light LC Time Fade Standby Manual state

uint16_t **lightness_on**

A lightness state that determines the perceptive light lightness at the Occupancy and Run internal controller states.The value of Light LC Lightness On state

uint16_t **lightness_prolong**

A lightness state that determines the light lightness at the Prolong internal controller state.The value of Light LC Lightness Prolong state

uint16_t **lightness_standby**

A lightness state that determines the light lightness at the Standby internal controller state.The value of Light LC Lightness Standby state

uint16_t **ambient_luxlevel_on**

A uint16 state representing the Ambient LuxLevel level that determines if the controller transitions from the Light Control Standby state.The value of Light LC Ambient LuxLevel On state

uint16_t **ambient_luxlevel_prolong**

A uint16 state representing the required Ambient LuxLevel level in the Prolong state.The value of Light LC Ambient LuxLevel Prolong state

uint16_t **ambient_luxlevel_standby**

A uint16 state representing the required Ambient LuxLevel level in the Standby state.The value of Light LC Ambient LuxLevel Standby state

float **regulator_kiu**

A float32 state representing the integral coefficient that determines the integral part of the equation defining the output of the Light LC PI Feedback Regulator, when Light LC Ambient LuxLevel is less than LuxLevel Out. Valid range: 0.0 ~ 1000.0. The default value is 250.0.The value of Light LC Regulator Kiu state

float **regulator_kid**

A float32 state representing the integral coefficient that determines the integral part of the equation defining the output of the Light LC PI Feedback Regulator, when Light LC Ambient LuxLevel is greater than or equal to the value of the LuxLevel Out state. Valid range: 0.0 ~ 1000.0. The default value is 25.0.The value of Light LC Regulator Kid state

float **regulator_kpu**

A float32 state representing the proportional coefficient that determines the proportional part of the equation defining the output of the Light LC PI Feedback Regulator, when Light LC Ambient LuxLevel is less than the value of the LuxLevel Out state. Valid range: 0.0 ~ 1000.0. The default value is 80.0.The value of Light LC Regulator Kpu state

float **regulator_kpd**

A float32 state representing the proportional coefficient that determines the proportional part of the equation defining the output of the Light LC PI Feedback Regulator, when Light LC Ambient LuxLevel is greater than or equal to the value of the LuxLevel Out state. Valid range: 0.0 ~ 1000.0. The default value is 80.0.The value of Light LC Regulator Kpd state

int8_t **regulator_accuracy**

A int8 state representing the percentage accuracy of the Light LC PI Feedback Regulator. Valid range: 0.0 ~ 100.0. The default value is 2.0.The value of Light LC Regulator Accuracy state

uint32_t **set_occupancy_to_1_delay**

If the message Raw field contains a Raw Value for the Time Since Motion Sensed device property, which represents a value less than or equal to the value of the Light LC Occupancy Delay state, it shall delay setting the Light LC Occupancy state to 0b1 by the difference between the value of the Light LC Occupancy Delay state and the received Time Since Motion value. The value of the difference between value of the Light LC Occupancy Delay state and the received Time Since Motion value

struct esp_ble_mesh_light_lc_state_machine_t

Parameters of Light LC state machine

Public Members

uint8_t **fade_on**

The value of transition time of Light LC Time Fade On

uint8_t **fade**

The value of transition time of Light LC Time Fade

uint8_t **fade_standby_auto**

The value of transition time of Light LC Time Fade Standby Auto

uint8_t **fade_standby_manual**

The value of transition time of Light LC Time Fade Standby Manual

struct *esp_ble_mesh_light_lc_state_machine_t*::[**anonymous**] **trans_time**

The Fade On, Fade, Fade Standby Auto, and Fade Standby Manual states are transition states that define the transition of the Lightness Out and LuxLevel Out states. This transition can be started as a result of the Light LC State Machine change or as a result of receiving the Light LC Light OnOff Set or Light LC Light Set Unacknowledged message.The value of transition time

esp_ble_mesh_lc_state_t **state**

The value of Light LC state machine state

struct k_delayed_work **timer**

Timer of Light LC state machine

struct esp_ble_mesh_light_control_t

Parameters of Light Lightness controller

Public Members

esp_ble_mesh_light_lc_state_t **state**

Parameters of Light LC state

esp_ble_mesh_light_lc_property_state_t **prop_state**

Parameters of Light LC Property state

esp_ble_mesh_light_lc_state_machine_t **state_machine**

Parameters of Light LC state machine

struct esp_ble_mesh_light_lc_srv_t

User data of Light LC Server Model

Public Members

esp_ble_mesh_model_t ***model**

Pointer to the Lighting LC Server Model. Initialized internally.

esp_ble_mesh_server_rsp_ctrl_t **rsp_ctrl**

Response control of the server model received messages

esp_ble_mesh_light_control_t ***lc**

Parameters of the Light controller

esp_ble_mesh_last_msg_info_t **last**

Parameters of the last received set message

esp_ble_mesh_state_transition_t **transition**

Parameters of state transition

struct esp_ble_mesh_light_lc_setup_srv_t

User data of Light LC Setup Server Model

Public Members

esp_ble_mesh_model_t ***model**

Pointer to the Lighting LC Setup Server Model. Initialized internally.

esp_ble_mesh_server_rsp_ctrl_t **rsp_ctrl**

Response control of the server model received messages

esp_ble_mesh_light_control_t ***lc**

Parameters of the Light controller

struct esp_ble_mesh_state_change_light_lightness_set_t

Parameter of Light Lightness Actual state change event

Public Members

uint16_t **lightness**

The value of Light Lightness Actual state

struct esp_ble_mesh_state_change_light_lightness_linear_set_t

Parameter of Light Lightness Linear state change event

Public Members

uint16_t **lightness**

The value of Light Lightness Linear state

struct esp_ble_mesh_state_change_light_lightness_default_set_t

Parameter of Light Lightness Default state change event

Public Members

uint16_t **lightness**

The value of Light Lightness Default state

struct esp_ble_mesh_state_change_light_lightness_range_set_t

Parameters of Light Lightness Range state change event

Public Members

uint16_t **range_min**

The minimum value of Light Lightness Range state

uint16_t **range_max**

The maximum value of Light Lightness Range state

struct esp_ble_mesh_state_change_light_ctl_set_t

Parameters of Light CTL state change event

Public Members

uint16_t **lightness**

The value of Light CTL Lightness state

uint16_t **temperature**

The value of Light CTL Temperature state

int16_t **delta_uv**

The value of Light CTL Delta UV state

struct esp_ble_mesh_state_change_light_ctl_temperature_set_t

Parameters of Light CTL Temperature state change event

Public Members

uint16_t **temperature**

The value of Light CTL Temperature state

int16_t **delta_uv**

The value of Light CTL Delta UV state

struct esp_ble_mesh_state_change_light_ctl_temperature_range_set_t

Parameters of Light CTL Temperature Range state change event

Public Members

uint16_t **range_min**

The minimum value of Light CTL Temperature Range state

uint16_t **range_max**

The maximum value of Light CTL Temperature Range state

struct esp_ble_mesh_state_change_light_ctl_default_set_t

Parameters of Light CTL Default state change event

Public Members

uint16_t **lightness**

The value of Light Lightness Default state

uint16_t **temperature**

The value of Light CTL Temperature Default state

int16_t **delta_uv**

The value of Light CTL Delta UV Default state

struct esp_ble_mesh_state_change_light_hsl_set_t

Parameters of Light HSL state change event

Public Members

uint16_t **lightness**

The value of Light HSL Lightness state

uint16_t **hue**

The value of Light HSL Hue state

uint16_t **saturation**

The value of Light HSL Saturation state

struct esp_ble_mesh_state_change_light_hsl_hue_set_t

Parameter of Light HSL Hue state change event

Public Members

uint16_t **hue**

The value of Light HSL Hue state

struct esp_ble_mesh_state_change_light_hsl_saturation_set_t

Parameter of Light HSL Saturation state change event

Public Members

uint16_t **saturation**

The value of Light HSL Saturation state

struct esp_ble_mesh_state_change_light_hsl_default_set_t

Parameters of Light HSL Default state change event

Public Members

uint16_t **lightness**

The value of Light HSL Lightness Default state

uint16_t **hue**

The value of Light HSL Hue Default state

uint16_t **saturation**

The value of Light HSL Saturation Default state

struct esp_ble_mesh_state_change_light_hsl_range_set_t

Parameters of Light HSL Range state change event

Public Members

uint16_t **hue_range_min**

The minimum hue value of Light HSL Range state

uint16_t **hue_range_max**

The maximum hue value of Light HSL Range state

uint16_t **saturation_range_min**

The minimum saturation value of Light HSL Range state

uint16_t **saturation_range_max**

The maximum saturation value of Light HSL Range state

struct esp_ble_mesh_state_change_light_xyl_set_t

Parameters of Light xyL state change event

Public Members

uint16_t **lightness**

The value of Light xyL Lightness state

uint16_t **x**

The value of Light xyL x state

uint16_t **y**

The value of Light xyL y state

struct esp_ble_mesh_state_change_light_xyl_default_set_t

Parameters of Light xyL Default state change event

Public Members

uint16_t **lightness**

The value of Light Lightness Default state

uint16_t **x**

The value of Light xyL x Default state

uint16_t **y**

The value of Light xyL y Default state

struct esp_ble_mesh_state_change_light_xyl_range_set_t

Parameters of Light xyL Range state change event

Public Members

uint16_t **x_range_min**

The minimum value of Light xyL x Range state

uint16_t **x_range_max**

The maximum value of Light xyL x Range state

uint16_t **y_range_min**

The minimum value of Light xyL y Range state

uint16_t **y_range_max**

The maximum value of Light xyL y Range state

struct esp_ble_mesh_state_change_light_lc_mode_set_t

Parameter of Light LC Mode state change event

Public Members

uint8_t **mode**

The value of Light LC Mode state

struct esp_ble_mesh_state_change_light_lc_om_set_t

Parameter of Light LC Occupancy Mode state change event

Public Members

uint8_t **mode**

The value of Light LC Occupancy Mode state

struct esp_ble_mesh_state_change_light_lc_light_onoff_set_t

Parameter of Light LC Light OnOff state change event

Public Members

uint8_t **onoff**

The value of Light LC Light OnOff state

struct esp_ble_mesh_state_change_light_lc_property_set_t

Parameters of Light LC Property state change event

Public Members

uint16_t **property_id**

The property id of Light LC Property state

struct net_buf_simple ***property_value**

The property value of Light LC Property state

struct esp_ble_mesh_state_change_sensor_status_t

Parameters of Sensor Status state change event

Public Members

uint16_t **property_id**

The value of Sensor Property ID

uint8_t **occupancy**

The value of Light LC Occupancy state

uint32_t **set_occupancy_to_1_delay**

The value of Light LC Set Occupancy to 1 Delay state

uint32_t **ambient_luxlevel**

The value of Light LC Ambient Luxlevel state

union *esp_ble_mesh_state_change_sensor_status_t*::[**anonymous**] **state**

Parameters of Sensor Status related state

struct esp_ble_mesh_server_recv_light_lc_property_get_t

Context of the received Light LC Property Get message

Public Members

uint16_t **property_id**

Property ID identifying a Light LC Property

struct esp_ble_mesh_server_recv_light_lightness_set_t

Context of the received Light Lightness Set message

Public Members

bool **op_en**

Indicate if optional parameters are included

uint16_t **lightness**

Target value of light lightness actual state

uint8_t **tid**

Transaction ID

uint8_t **trans_time**

Time to complete state transition (optional)

uint8_t **delay**

Indicate message execution delay (C.1)

struct esp_ble_mesh_server_recv_light_lightness_linear_set_t

Context of the received Light Lightness Linear Set message

Public Members

bool **op_en**

Indicate if optional parameters are included

uint16_t **lightness**

Target value of light lightness linear state

uint8_t **tid**

Transaction ID

uint8_t **trans_time**

Time to complete state transition (optional)

uint8_t **delay**

Indicate message execution delay (C.1)

struct esp_ble_mesh_server_recv_light_lightness_default_set_t

Context of the received Light Lightness Default Set message

Public Members

uint16_t **lightness**

The value of the Light Lightness Default state

struct esp_ble_mesh_server_recv_light_lightness_range_set_t

Context of the received Light Lightness Range Set message

Public Members

uint16_t **range_min**

Value of range min field of light lightness range state

uint16_t **range_max**

Value of range max field of light lightness range state

struct esp_ble_mesh_server_recv_light_ctl_set_t

Context of the received Light CTL Set message

Public Members

bool **op_en**

Indicate if optional parameters are included

uint16_t **lightness**

Target value of light ctl lightness state

uint16_t **temperature**

Target value of light ctl temperature state

int16_t **delta_uv**

Target value of light ctl delta UV state

uint8_t **tid**

Transaction ID

uint8_t **trans_time**

Time to complete state transition (optional)

uint8_t **delay**

Indicate message execution delay (C.1)

struct esp_ble_mesh_server_recv_light_ctl_temperature_set_t

Context of the received Light CTL Temperature Set message

Public Members

bool **op_en**

Indicate if optional parameters are included

uint16_t **temperature**

Target value of light ctl temperature state

int16_t **delta_uv**

Target value of light ctl delta UV state

uint8_t **tid**

Transaction ID

uint8_t **trans_time**

Time to complete state transition (optional)

uint8_t **delay**

Indicate message execution delay (C.1)

struct esp_ble_mesh_server_recv_light_ctl_temperature_range_set_t

Context of the received Light CTL Temperature Range Set message

Public Members

uint16_t **range_min**

Value of temperature range min field of light ctl temperature range state

uint16_t **range_max**

Value of temperature range max field of light ctl temperature range state

struct esp_ble_mesh_server_recv_light_ctl_default_set_t

Context of the received Light CTL Default Set message

Public Members

uint16_t **lightness**

Value of light lightness default state

uint16_t **temperature**

Value of light temperature default state

int16_t **delta_uv**

Value of light delta UV default state

struct esp_ble_mesh_server_recv_light_hsl_set_t

Context of the received Light HSL Set message

Public Members

bool **op_en**

Indicate if optional parameters are included

uint16_t **lightness**

Target value of light hsl lightness state

uint16_t **hue**

Target value of light hsl hue state

uint16_t **saturation**

Target value of light hsl saturation state

uint8_t **tid**

Transaction ID

uint8_t **trans_time**

Time to complete state transition (optional)

uint8_t **delay**

Indicate message execution delay (C.1)

struct esp_ble_mesh_server_recv_light_hsl_hue_set_t

Context of the received Light HSL Hue Set message

Public Members

bool **op_en**

Indicate if optional parameters are included

uint16_t **hue**

Target value of light hsl hue state

uint8_t **tid**

Transaction ID

uint8_t **trans_time**

Time to complete state transition (optional)

uint8_t **delay**

Indicate message execution delay (C.1)

struct esp_ble_mesh_server_recv_light_hsl_saturation_set_t

Context of the received Light HSL Saturation Set message

Public Members

bool **op_en**

Indicate if optional parameters are included

uint16_t **saturation**

Target value of light hsl hue state

uint8_t **tid**

Transaction ID

uint8_t **trans_time**

Time to complete state transition (optional)

uint8_t **delay**

Indicate message execution delay (C.1)

struct esp_ble_mesh_server_recv_light_hsl_default_set_t

Context of the received Light HSL Default Set message

Public Members

uint16_t **lightness**

Value of light lightness default state

uint16_t **hue**

Value of light hue default state

uint16_t **saturation**

Value of light saturation default state

struct esp_ble_mesh_server_recv_light_hsl_range_set_t

Context of the received Light HSL Range Set message

Public Members

uint16_t **hue_range_min**

Value of hue range min field of light hsl hue range state

uint16_t **hue_range_max**

Value of hue range max field of light hsl hue range state

uint16_t **saturation_range_min**

Value of saturation range min field of light hsl saturation range state

uint16_t **saturation_range_max**

Value of saturation range max field of light hsl saturation range state

struct esp_ble_mesh_server_recv_light_xyl_set_t

Context of the received Light xyL Set message

Public Members

bool **op_en**

Indicate whether optional parameters included

uint16_t **lightness**

The target value of the Light xyL Lightness state

uint16_t **x**

The target value of the Light xyL x state

uint16_t **y**

The target value of the Light xyL y state

uint8_t **tid**

Transaction Identifier

uint8_t **trans_time**

Time to complete state transition (optional)

uint8_t **delay**

Indicate message execution delay (C.1)

struct esp_ble_mesh_server_recv_light_xyl_default_set_t

Context of the received Light xyL Default Set message

Public Members

uint16_t **lightness**

The value of the Light Lightness Default state

uint16_t **x**

The value of the Light xyL x Default state

uint16_t **y**

The value of the Light xyL y Default state

struct esp_ble_mesh_server_recv_light_xyl_range_set_t

Context of the received Light xyl Range Set message

Public Members

uint16_t **x_range_min**

The value of the xyL x Range Min field of the Light xyL x Range state

uint16_t **x_range_max**

The value of the xyL x Range Max field of the Light xyL x Range state

uint16_t **y_range_min**

The value of the xyL y Range Min field of the Light xyL y Range state

uint16_t **y_range_max**

The value of the xyL y Range Max field of the Light xyL y Range state

struct esp_ble_mesh_server_recv_light_lc_mode_set_t

Context of the received Light LC Mode Set message

Public Members

uint8_t **mode**

The target value of the Light LC Mode state

struct esp_ble_mesh_server_recv_light_lc_om_set_t

Context of the received Light OM Set message

Public Members

uint8_t **mode**

The target value of the Light LC Occupancy Mode state

struct esp_ble_mesh_server_recv_light_lc_light_onoff_set_t

Context of the received Light LC Light OnOff Set message

Public Members

bool **op_en**

Indicate whether optional parameters included

uint8_t **light_onoff**

The target value of the Light LC Light OnOff state

uint8_t **tid**

Transaction Identifier

uint8_t **trans_time**

Time to complete state transition (optional)

uint8_t **delay**

Indicate message execution delay (C.1)

struct esp_ble_mesh_server_recv_light_lc_property_set_t

Context of the received Light LC Property Set message

Public Members

uint16_t **property_id**

Property ID identifying a Light LC Property

struct net_buf_simple ***property_value**

Raw value for the Light LC Property

struct esp_ble_mesh_server_recv_sensor_status_t

Context of the received Sensor Status message

Public Members

struct net_buf_simple ***data**

Value of sensor data state (optional)

struct esp_ble_mesh_lighting_server_cb_param_t

Lighting Server Model callback parameters

Public Members

esp_ble_mesh_model_t ***model**

Pointer to Lighting Server Models

esp_ble_mesh_msg_ctx_t **ctx**

Context of the received messages

esp_ble_mesh_lighting_server_cb_value_t **value**

Value of the received Lighting Messages

Macros

ESP_BLE_MESH_MODEL_LIGHT_LIGHTNESS_CLI(cli_pub, cli_data)

Define a new Light Lightness Client Model.

Note This API needs to be called for each element on which the application needs to have a Light Lightness Client Model.

Return New Light Lightness Client Model instance.

Parameters

- `cli_pub`: Pointer to the unique struct *esp_ble_mesh_model_pub_t*.
- `cli_data`: Pointer to the unique struct *esp_ble_mesh_client_t*.

`ESP_BLE_MESH_MODEL_LIGHT_CTL_CLI`(cli_pub, cli_data)

Define a new Light CTL Client Model.

Note This API needs to be called for each element on which the application needs to have a Light CTL Client Model.

Return New Light CTL Client Model instance.

Parameters

- `cli_pub`: Pointer to the unique struct *esp_ble_mesh_model_pub_t*.
- `cli_data`: Pointer to the unique struct *esp_ble_mesh_client_t*.

`ESP_BLE_MESH_MODEL_LIGHT_HSL_CLI`(cli_pub, cli_data)

Define a new Light HSL Client Model.

Note This API needs to be called for each element on which the application needs to have a Light HSL Client Model.

Return New Light HSL Client Model instance.

Parameters

- `cli_pub`: Pointer to the unique struct *esp_ble_mesh_model_pub_t*.
- `cli_data`: Pointer to the unique struct *esp_ble_mesh_client_t*.

`ESP_BLE_MESH_MODEL_LIGHT_XYL_CLI`(cli_pub, cli_data)

Define a new Light xyL Client Model.

Note This API needs to be called for each element on which the application needs to have a Light xyL Client Model.

Return New Light xyL Client Model instance.

Parameters

- `cli_pub`: Pointer to the unique struct *esp_ble_mesh_model_pub_t*.
- `cli_data`: Pointer to the unique struct *esp_ble_mesh_client_t*.

`ESP_BLE_MESH_MODEL_LIGHT_LC_CLI`(cli_pub, cli_data)

Define a new Light LC Client Model.

Note This API needs to be called for each element on which the application needs to have a Light LC Client Model.

Return New Light LC Client Model instance.

Parameters

- `cli_pub`: Pointer to the unique struct *esp_ble_mesh_model_pub_t*.
- `cli_data`: Pointer to the unique struct *esp_ble_mesh_client_t*.

`ESP_BLE_MESH_MODEL_LIGHT_LIGHTNESS_SRV`(srv_pub, srv_data)

Lighting Server Models related context.

Define a new Light Lightness Server Model.

Note 1. The Light Lightness Server model extends the Generic Power OnOff Server model and the Generic Level Server model. When this model is present on an Element, the corresponding Light Lightness Setup Server model shall also be present.

1. This model shall support model publication and model subscription.

Return New Light Lightness Server Model instance.

Parameters

- `srv_pub`: Pointer to the unique struct *esp_ble_mesh_model_pub_t*.
- `srv_data`: Pointer to the unique struct *esp_ble_mesh_light_lightness_srv_t*.

`ESP_BLE_MESH_MODEL_LIGHT_LIGHTNESS_SETUP_SRV`(srv_pub, srv_data)

Define a new Light Lightness Setup Server Model.

Note 1. The Light Lightness Setup Server model extends the Light Lightness Server model and the Generic Power OnOff Setup Server model.

1. This model shall support model subscription.

Return New Light Lightness Setup Server Model instance.

Parameters

- `srv_pub`: Pointer to the unique struct *esp_ble_mesh_model_pub_t*.
- `srv_data`: Pointer to the unique struct *esp_ble_mesh_light_lightness_setup_srv_t*.

`ESP_BLE_MESH_MODEL_LIGHT_CTL_SRV`(srv_pub, srv_data)

Define a new Light CTL Server Model.

Note 1. The Light CTL Server model extends the Light Lightness Server model. When this model is present on an Element, the corresponding Light CTL Temperature Server model and the corresponding Light CTL Setup Server model shall also be present.

1. This model shall support model publication and model subscription.
2. The model requires two elements: the main element and the Temperature element. The Temperature element contains the corresponding Light CTL Temperature Server model and an instance of a Generic Level state bound to the Light CTL Temperature state on the

Temperature element. The Light CTL Temperature state on the Temperature element is bound to the Light CTL state on the main element.

Return New Light CTL Server Model instance.

Parameters

- `srv_pub`: Pointer to the unique struct *esp_ble_mesh_model_pub_t*.
- `srv_data`: Pointer to the unique struct *esp_ble_mesh_light_ctl_srv_t*.

`ESP_BLE_MESH_MODEL_LIGHT_CTL_SETUP_SRV`(srv_pub, srv_data)

Define a new Light CTL Setup Server Model.

Note 1. The Light CTL Setup Server model extends the Light CTL Server and the Light Lightness Setup Server.

1. This model shall support model subscription.

Return New Light CTL Setup Server Model instance.

Parameters

- `srv_pub`: Pointer to the unique struct *esp_ble_mesh_model_pub_t*.
- `srv_data`: Pointer to the unique struct *esp_ble_mesh_light_ctl_setup_srv_t*.

`ESP_BLE_MESH_MODEL_LIGHT_CTL_TEMP_SRV`(srv_pub, srv_data)

Define a new Light CTL Temperature Server Model.

Note 1. The Light CTL Temperature Server model extends the Generic Level Server model.

1. This model shall support model publication and model subscription.

Return New Light CTL Temperature Server Model instance.

Parameters

- `srv_pub`: Pointer to the unique struct *esp_ble_mesh_model_pub_t*.
- `srv_data`: Pointer to the unique struct *esp_ble_mesh_light_ctl_temp_srv_t*.

`ESP_BLE_MESH_MODEL_LIGHT_HSL_SRV`(srv_pub, srv_data)

Define a new Light HSL Server Model.

Note 1. The Light HSL Server model extends the Light Lightness Server model. When this model is present on an Element, the corresponding Light HSL Hue Server model and the corresponding Light HSL Saturation Server model and the corresponding Light HSL Setup Server model shall also be present.

1. This model shall support model publication and model subscription.

2. The model requires three elements: the main element and the Hue element and the Saturation element. The Hue element contains the corresponding Light HSL Hue Server model and an instance of a Generic Level state bound to the Light HSL Hue state on the Hue element. The Saturation element contains the corresponding Light HSL Saturation Server model and an instance of a Generic Level state bound to the Light HSL Saturation state on the Saturation element. The Light HSL Hue state on the Hue element is bound to the Light HSL state on the main element and the Light HSL Saturation state on the Saturation element is bound to the Light HSL state on the main element.

Return New Light HSL Server Model instance.

Parameters

- `srv_pub`: Pointer to the unique struct *esp_ble_mesh_model_pub_t*.
- `srv_data`: Pointer to the unique struct *esp_ble_mesh_light_hsl_srv_t*.

`ESP_BLE_MESH_MODEL_LIGHT_HSL_SETUP_SRV`(srv_pub, srv_data)

Define a new Light HSL Setup Server Model.

Note 1. The Light HSL Setup Server model extends the Light HSL Server and the Light Lightness Setup Server.

1. This model shall support model subscription.

Return New Light HSL Setup Server Model instance.

Parameters

- `srv_pub`: Pointer to the unique struct *esp_ble_mesh_model_pub_t*.
- `srv_data`: Pointer to the unique struct *esp_ble_mesh_light_hsl_setup_srv_t*.

`ESP_BLE_MESH_MODEL_LIGHT_HSL_HUE_SRV`(srv_pub, srv_data)

Define a new Light HSL Hue Server Model.

Note 1. The Light HSL Hue Server model extends the Generic Level Server model. This model is associated with the Light HSL Server model.

1. This model shall support model publication and model subscription.

Return New Light HSL Hue Server Model instance.

Parameters

- `srv_pub`: Pointer to the unique struct *esp_ble_mesh_model_pub_t*.
- `srv_data`: Pointer to the unique struct *esp_ble_mesh_light_hsl_hue_srv_t*.

`ESP_BLE_MESH_MODEL_LIGHT_HSL_SAT_SRV`(srv_pub, srv_data)

Define a new Light HSL Saturation Server Model.

Note 1. The Light HSL Saturation Server model extends the Generic Level Server model. This model is associated with the Light HSL Server model.

1. This model shall support model publication and model subscription.

Return New Light HSL Saturation Server Model instance.

Parameters

- `srv_pub`: Pointer to the unique struct *esp_ble_mesh_model_pub_t*.
- `srv_data`: Pointer to the unique struct *esp_ble_mesh_light_hsl_sat_srv_t*.

`ESP_BLE_MESH_MODEL_LIGHT_XYL_SRV`(srv_pub, srv_data)

Define a new Light xyL Server Model.

Note 1. The Light xyL Server model extends the Light Lightness Server model. When this model is present on an Element, the corresponding Light xyL Setup Server model shall also be present.

1. This model shall support model publication and model subscription.

Return New Light xyL Server Model instance.

Parameters

- `srv_pub`: Pointer to the unique struct *esp_ble_mesh_model_pub_t*.
- `srv_data`: Pointer to the unique struct *esp_ble_mesh_light_xyl_srv_t*.

`ESP_BLE_MESH_MODEL_LIGHT_XYL_SETUP_SRV`(srv_pub, srv_data)

Define a new Light xyL Setup Server Model.

Note 1. The Light xyL Setup Server model extends the Light xyL Server and the Light Lightness Setup Server.

1. This model shall support model subscription.

Return New Light xyL Setup Server Model instance.

Parameters

- `srv_pub`: Pointer to the unique struct *esp_ble_mesh_model_pub_t*.
- `srv_data`: Pointer to the unique struct *esp_ble_mesh_light_xyl_setup_srv_t*.

`ESP_BLE_MESH_MODEL_LIGHT_LC_SRV`(srv_pub, srv_data)

Define a new Light LC Server Model.

Note 1. The Light LC (Lightness Control) Server model extends the Light Lightness Server model and the Generic OnOff Server model. When this model is present on an Element, the corresponding Light LC Setup Server model shall also be present.

1. This model shall support model publication and model subscription.

2. This model may be used to represent an element that is a client to a Sensor Server model and controls the Light Lightness Actual state via defined state bindings.

Return New Light LC Server Model instance.

Parameters

- `srv_pub`: Pointer to the unique struct *esp_ble_mesh_model_pub_t*.
- `srv_data`: Pointer to the unique struct *esp_ble_mesh_light_lc_srv_t*.

`ESP_BLE_MESH_MODEL_LIGHT_LC_SETUP_SRV`(srv_pub, srv_data)

Define a new Light LC Setup Server Model.

Note 1. The Light LC (Lightness Control) Setup model extends the Light LC Server model.

1. This model shall support model publication and model subscription.
2. This model may be used to configure setup parameters for the Light LC Server model.

Return New Light LC Setup Server Model instance.

Parameters

- `srv_pub`: Pointer to the unique struct *esp_ble_mesh_model_pub_t*.
- `srv_data`: Pointer to the unique struct *esp_ble_mesh_light_lc_setup_srv_t*.

Type Definitions

`typedef` void (*`esp_ble_mesh_light_client_cb_t`)(*esp_ble_mesh_light_client_cb_event_t* event, *esp_ble_mesh_light_client_cb_param_t* *param)

Bluetooth Mesh Light Client Model function.

Lighting Client Model callback function type

Parameters

- `event`: Event type
- `param`: Pointer to callback parameter

`typedef` void (*`esp_ble_mesh_lighting_server_cb_t`)(*esp_ble_mesh_lighting_server_cb_event_t* event, *esp_ble_mesh_lighting_server_cb_param_t* *param)

Bluetooth Mesh Lighting Server Model function.

Lighting Server Model callback function type

Parameters

- `event`: Event type

- `param`: Pointer to callback parameter

Enumerations

enum esp_ble_mesh_light_client_cb_event_t

This enum value is the event of Lighting Client Model

Values:

ESP_BLE_MESH_LIGHT_CLIENT_GET_STATE_EVT

ESP_BLE_MESH_LIGHT_CLIENT_SET_STATE_EVT

ESP_BLE_MESH_LIGHT_CLIENT_PUBLISH_EVT

ESP_BLE_MESH_LIGHT_CLIENT_TIMEOUT_EVT

ESP_BLE_MESH_LIGHT_CLIENT_EVT_MAX

enum esp_ble_mesh_lc_state_t

This enum value is the Light LC State Machine states

Values:

ESP_BLE_MESH_LC_OFF

ESP_BLE_MESH_LC_STANDBY

ESP_BLE_MESH_LC_FADE_ON

ESP_BLE_MESH_LC_RUN

ESP_BLE_MESH_LC_FADE

ESP_BLE_MESH_LC_PROLONG

ESP_BLE_MESH_LC_FADE_STANDBY_AUTO

ESP_BLE_MESH_LC_FADE_STANDBY_MANUAL

enum esp_ble_mesh_lighting_server_cb_event_t

This enum value is the event of Lighting Server Model

Values:

ESP_BLE_MESH_LIGHTING_SERVER_STATE_CHANGE_EVT

1. When get_auto_rsp is set to ESP_BLE_MESH_SERVER_AUTO_RSP, no event will be callback to the application layer when Lighting Get messages are received.
2. When set_auto_rsp is set to ESP_BLE_MESH_SERVER_AUTO_RSP, this event will be callback to the application layer when Lighting Set/Set Unack messages are received.

`ESP_BLE_MESH_LIGHTING_SERVER_RECV_GET_MSG_EVT`
When get_auto_rsp is set to ESP_BLE_MESH_SERVER_RSP_BY_APP, this event will be callback to the application layer when Lighting Get messages are received.

`ESP_BLE_MESH_LIGHTING_SERVER_RECV_SET_MSG_EVT`
When set_auto_rsp is set to ESP_BLE_MESH_SERVER_RSP_BY_APP, this event will be callback to the application layer when Lighting Set/Set Unack messages are received.

`ESP_BLE_MESH_LIGHTING_SERVER_RECV_STATUS_MSG_EVT`
When status_auto_rsp is set to ESP_BLE_MESH_SERVER_RSP_BY_APP, this event will be callback to the application layer when Sensor Status message is received.

`ESP_BLE_MESH_LIGHTING_SERVER_EVT_MAX`

Time and Scenes Client/Server Models

Header File

- bt/esp_ble_mesh/api/models/include/esp_ble_mesh_sensor_model_api.h

Functions

esp_err_t **esp_ble_mesh_register_sensor_client_callback**(*esp_ble_mesh_sensor_client_cb_t callback*)

Register BLE Mesh Sensor Client Model callback.

Return ESP_OK on success or error code otherwise.

Parameters

- `callback`: Pointer to the callback function.

esp_err_t **esp_ble_mesh_sensor_client_get_state**(*esp_ble_mesh_client_common_param_t* **params*, *esp_ble_mesh_sensor_client_get_state_t* **get_state*)

Get the value of Sensor Server Model states using the Sensor Client Model get messages.

Note If you want to know the opcodes and corresponding meanings accepted by this API, please refer to esp_ble_mesh_sensor_message_opcode_t in esp_ble_mesh_defs.h

Return ESP_OK on success or error code otherwise.

Parameters

- `params`: Pointer to BLE Mesh common client parameters.
- `get_state`: Pointer to sensor get message value. Shall not be set to NULL.

esp_err_t **esp_ble_mesh_sensor_client_set_state**(*esp_ble_mesh_client_common_param_t* **params*, *esp_ble_mesh_sensor_client_set_state_t* **set_state*)

Set the value of Sensor Server Model states using the Sensor Client Model set messages.

Note If you want to know the opcodes and corresponding meanings accepted by this API, please refer to esp_ble_mesh_sensor_message_opcode_t in esp_ble_mesh_defs.h

Return ESP_OK on success or error code otherwise.

Parameters

- `params`: Pointer to BLE Mesh common client parameters.
- `set_state`: Pointer to sensor set message value. Shall not be set to NULL.

esp_err_t **esp_ble_mesh_register_sensor_server_callback**(*esp_ble_mesh_sensor_server_cb_t* *callback*)

Register BLE Mesh Sensor Server Model callback.

Return ESP_OK on success or error code otherwise.

Parameters

- `callback`: Pointer to the callback function.

Unions

union esp_ble_mesh_sensor_client_get_state_t

#include <esp_ble_mesh_sensor_model_api.h> Sensor Client Model get message union.

Public Members

esp_ble_mesh_sensor_descriptor_get_t **descriptor_get**

For ESP_BLE_MESH_MODEL_OP_SENSOR_DESCRIPTOR_GET

esp_ble_mesh_sensor_cadence_get_t **cadence_get**

For ESP_BLE_MESH_MODEL_OP_SENSOR_CADENCE_GET

esp_ble_mesh_sensor_settings_get_t **settings_get**

For ESP_BLE_MESH_MODEL_OP_SENSOR_SETTINGS_GET

esp_ble_mesh_sensor_setting_get_t **setting_get**

For ESP_BLE_MESH_MODEL_OP_SENSOR_SETTING_GET

esp_ble_mesh_sensor_get_t **sensor_get**

For ESP_BLE_MESH_MODEL_OP_SENSOR_GET

esp_ble_mesh_sensor_column_get_t **column_get**

For ESP_BLE_MESH_MODEL_OP_SENSOR_COLUMN_GET

esp_ble_mesh_sensor_series_get_t **series_get**
For ESP_BLE_MESH_MODEL_OP_SENSOR_SERIES_GET

union esp_ble_mesh_sensor_client_set_state_t
#include <esp_ble_mesh_sensor_model_api.h> Sensor Client Model set message union.

Public Members

esp_ble_mesh_sensor_cadence_set_t **cadence_set**
For ESP_BLE_MESH_MODEL_OP_SENSOR_CADENCE_SET & ESP_BLE_MESH_MODEL_OP_SENSOR_CADENCE_SET_UNACK

esp_ble_mesh_sensor_setting_set_t **setting_set**
For ESP_BLE_MESH_MODEL_OP_SENSOR_SETTING_SET & ESP_BLE_MESH_MODEL_OP_SENSOR_SETTING_SET_UNACK

union esp_ble_mesh_sensor_client_status_cb_t
#include <esp_ble_mesh_sensor_model_api.h> Sensor Client Model received message union.

Public Members

esp_ble_mesh_sensor_descriptor_status_cb_t **descriptor_status**
For ESP_BLE_MESH_MODEL_OP_SENSOR_DESCRIPTOR_STATUS

esp_ble_mesh_sensor_cadence_status_cb_t **cadence_status**
For ESP_BLE_MESH_MODEL_OP_SENSOR_CADENCE_STATUS

esp_ble_mesh_sensor_settings_status_cb_t **settings_status**
For ESP_BLE_MESH_MODEL_OP_SENSOR_SETTINGS_STATUS

esp_ble_mesh_sensor_setting_status_cb_t **setting_status**
For ESP_BLE_MESH_MODEL_OP_SENSOR_SETTING_STATUS

esp_ble_mesh_sensor_status_cb_t **sensor_status**
For ESP_BLE_MESH_MODEL_OP_SENSOR_STATUS

esp_ble_mesh_sensor_column_status_cb_t **column_status**
For ESP_BLE_MESH_MODEL_OP_SENSOR_COLUMN_STATUS

esp_ble_mesh_sensor_series_status_cb_t **series_status**
For ESP_BLE_MESH_MODEL_OP_SENSOR_SERIES_STATUS

union esp_ble_mesh_sensor_server_state_change_t
#include <esp_ble_mesh_sensor_model_api.h> Sensor Server Model state change value union.

Public Members

esp_ble_mesh_state_change_sensor_cadence_set_t **sensor_cadence_set**

The recv_op in ctx can be used to decide which state is changed.Sensor Cadence Set

esp_ble_mesh_state_change_sensor_setting_set_t **sensor_setting_set**

Sensor Setting Set

union esp_ble_mesh_sensor_server_recv_get_msg_t

#include <esp_ble_mesh_sensor_model_api.h> Sensor Server Model received get message union.

Public Members

esp_ble_mesh_server_recv_sensor_descriptor_get_t **sensor_descriptor**

Sensor Descriptor Get

esp_ble_mesh_server_recv_sensor_cadence_get_t **sensor_cadence**

Sensor Cadence Get

esp_ble_mesh_server_recv_sensor_settings_get_t **sensor_settings**

Sensor Settings Get

esp_ble_mesh_server_recv_sensor_setting_get_t **sensor_setting**

Sensor Setting Get

esp_ble_mesh_server_recv_sensor_get_t **sensor_data**

Sensor Get

esp_ble_mesh_server_recv_sensor_column_get_t **sensor_column**

Sensor Column Get

esp_ble_mesh_server_recv_sensor_series_get_t **sensor_series**

Sensor Series Get

union esp_ble_mesh_sensor_server_recv_set_msg_t

#include <esp_ble_mesh_sensor_model_api.h> Sensor Server Model received set message union.

Public Members

esp_ble_mesh_server_recv_sensor_cadence_set_t **sensor_cadence**

Sensor Cadence Set

esp_ble_mesh_server_recv_sensor_setting_set_t **sensor_setting**

Sensor Setting Set

union esp_ble_mesh_sensor_server_cb_value_t

#include <esp_ble_mesh_sensor_model_api.h> Sensor Server Model callback value union.

Public Members

esp_ble_mesh_sensor_server_state_change_t **state_change**
ESP_BLE_MESH_SENSOR_SERVER_STATE_CHANGE_EVT

esp_ble_mesh_sensor_server_recv_get_msg_t **get**
ESP_BLE_MESH_SENSOR_SERVER_RECV_GET_MSG_EVT

esp_ble_mesh_sensor_server_recv_set_msg_t **set**
ESP_BLE_MESH_SENSOR_SERVER_RECV_SET_MSG_EVT

Structures

struct esp_ble_mesh_sensor_descriptor_get_t
Bluetooth Mesh Sensor Client Model Get and Set parameters structure.

Parameters of Sensor Descriptor Get

Public Members

bool **op_en**
Indicate if optional parameters are included

uint16_t **property_id**
Property ID of a sensor (optional)

struct esp_ble_mesh_sensor_cadence_get_t
Parameter of Sensor Cadence Get

Public Members

uint16_t **property_id**
Property ID of a sensor

struct esp_ble_mesh_sensor_cadence_set_t
Parameters of Sensor Cadence Set

Public Members

uint16_t **property_id**
Property ID for the sensor

uint8_t **fast_cadence_period_divisor**
Divisor for the publish period

uint8_t **status_trigger_type**
The unit and format of the Status Trigger Delta fields

struct net_buf_simple ***status_trigger_delta_down**
Delta down value that triggers a status message

struct net_buf_simple ***status_trigger_delta_up**
Delta up value that triggers a status message

uint8_t **status_min_interval**
Minimum interval between two consecutive Status messages

struct net_buf_simple ***fast_cadence_low**
Low value for the fast cadence range

struct net_buf_simple ***fast_cadence_high**
Fast value for the fast cadence range

struct esp_ble_mesh_sensor_settings_get_t
Parameter of Sensor Settings Get

Public Members

uint16_t **sensor_property_id**
Property ID of a sensor

struct esp_ble_mesh_sensor_setting_get_t
Parameters of Sensor Setting Get

Public Members

uint16_t **sensor_property_id**
Property ID of a sensor

uint16_t **sensor_setting_property_id**
Setting ID identifying a setting within a sensor

struct esp_ble_mesh_sensor_setting_set_t
Parameters of Sensor Setting Set

Public Members

uint16_t **sensor_property_id**
Property ID identifying a sensor

uint16_t **sensor_setting_property_id**
Setting ID identifying a setting within a sensor

struct net_buf_simple ***sensor_setting_raw**

Raw value for the setting

struct esp_ble_mesh_sensor_get_t

Parameters of Sensor Get

Public Members

bool **op_en**

Indicate if optional parameters are included

uint16_t **property_id**

Property ID for the sensor (optional)

struct esp_ble_mesh_sensor_column_get_t

Parameters of Sensor Column Get

Public Members

uint16_t **property_id**

Property identifying a sensor

struct net_buf_simple ***raw_value_x**

Raw value identifying a column

struct esp_ble_mesh_sensor_series_get_t

Parameters of Sensor Series Get

Public Members

bool **op_en**

Indicate if optional parameters are included

uint16_t **property_id**

Property identifying a sensor

struct net_buf_simple ***raw_value_x1**

Raw value identifying a starting column (optional)

struct net_buf_simple ***raw_value_x2**

Raw value identifying an ending column (C.1)

struct esp_ble_mesh_sensor_descriptor_status_cb_t

Bluetooth Mesh Sensor Client Model Get and Set callback parameters structure.

Parameter of Sensor Descriptor Status

Public Members

struct net_buf_simple ***descriptor**

Sequence of 8-octet sensor descriptors (optional)

struct esp_ble_mesh_sensor_cadence_status_cb_t

Parameters of Sensor Cadence Status

Public Members

uint16_t **property_id**

Property for the sensor

struct net_buf_simple ***sensor_cadence_value**

Value of sensor cadence state

struct esp_ble_mesh_sensor_settings_status_cb_t

Parameters of Sensor Settings Status

Public Members

uint16_t **sensor_property_id**

Property ID identifying a sensor

struct net_buf_simple ***sensor_setting_property_ids**

A sequence of N sensor setting property IDs (optional)

struct esp_ble_mesh_sensor_setting_status_cb_t

Parameters of Sensor Setting Status

Public Members

bool **op_en**

Indicate id optional parameters are included

uint16_t **sensor_property_id**

Property ID identifying a sensor

uint16_t **sensor_setting_property_id**

Setting ID identifying a setting within a sensor

uint8_t **sensor_setting_access**

Read/Write access rights for the setting (optional)

struct net_buf_simple ***sensor_setting_raw**

Raw value for the setting

struct esp_ble_mesh_sensor_status_cb_t

Parameter of Sensor Status

Public Members

struct net_buf_simple ***marshalled_sensor_data**

Value of sensor data state (optional)

struct esp_ble_mesh_sensor_column_status_cb_t

Parameters of Sensor Column Status

Public Members

uint16_t **property_id**

Property identifying a sensor and the Y axis

struct net_buf_simple ***sensor_column_value**

Left values of sensor column status

struct esp_ble_mesh_sensor_series_status_cb_t

Parameters of Sensor Series Status

Public Members

uint16_t **property_id**

Property identifying a sensor and the Y axis

struct net_buf_simple ***sensor_series_value**

Left values of sensor series status

struct esp_ble_mesh_sensor_client_cb_param_t

Sensor Client Model callback parameters

Public Members

int **error_code**

0: success, otherwise failure. For the error code values please refer to errno.h file. A negative sign is added to the standard error codes in errno.h.

esp_ble_mesh_client_common_param_t ***params**

The client common parameters.

esp_ble_mesh_sensor_client_status_cb_t **status_cb**

The sensor status message callback values

struct esp_ble_mesh_sensor_descriptor_t

Parameters of Sensor Descriptor state

Public Members

uint32_t **positive_tolerance**

The value of Sensor Positive Tolerance field

uint32_t **negative_tolerance**

The value of Sensor Negative Tolerance field

uint32_t **sampling_function**

The value of Sensor Sampling Function field

uint8_t **measure_period**

The value of Sensor Measurement Period field

uint8_t **update_interval**

The value of Sensor Update Interval field

struct esp_ble_mesh_sensor_setting_t

Parameters of Sensor Setting state

Public Members

uint16_t **property_id**

The value of Sensor Setting Property ID field

uint8_t **access**

The value of Sensor Setting Access field

struct net_buf_simple ***raw**

The value of Sensor Setting Raw field

struct esp_ble_mesh_sensor_cadence_t

Parameters of Sensor Cadence state

Public Members

uint8_t **period_divisor**

The value of Fast Cadence Period Divisor field

uint8_t **trigger_type**

The value of Status Trigger Type field

struct net_buf_simple ***trigger_delta_down**

Note: The parameter "size" in trigger_delta_down, trigger_delta_up, fast_cadence_low & fast_cadence_high indicates the exact length of these four parameters, and they are associated

with the Sensor Property ID. Users need to initialize the "size" precisely.The value of Status Trigger Delta Down field

struct net_buf_simple ***trigger_delta_up**
The value of Status Trigger Delta Up field

uint8_t **min_interval**
The value of Status Min Interval field

struct net_buf_simple ***fast_cadence_low**
The value of Fast Cadence Low field

struct net_buf_simple ***fast_cadence_high**
The value of Fast Cadence High field

struct esp_ble_mesh_sensor_data_t
Parameters of Sensor Data state

Public Members

uint8_t **format**
Format A: The Length field is a 1-based uint4 value (valid range 0x0–0xF, representing range of 1 – 16). Format B: The Length field is a 1-based uint7 value (valid range 0x0–0x7F, representing range of 1 – 127). The value 0x7F represents a length of zero.The value of the Sensor Data format

uint8_t **length**
The value of the Sensor Data length

struct net_buf_simple ***raw_value**
The value of Sensor Data raw value

struct esp_ble_mesh_sensor_series_column_t
Parameters of Sensor Series Column state

Public Members

struct net_buf_simple ***raw_value_x**
The value of Sensor Raw Value X field

struct net_buf_simple ***column_width**
The value of Sensor Column Width field

struct net_buf_simple ***raw_value_y**
The value of Sensor Raw Value Y field

struct esp_ble_mesh_sensor_state_t
Parameters of Sensor states

Public Members

uint16_t **sensor_property_id**

The value of Sensor Property ID field

esp_ble_mesh_sensor_descriptor_t **descriptor**

Parameters of the Sensor Descriptor state

const uint8_t **setting_count**

Multiple Sensor Setting states may be present for each sensor. The Sensor Setting Property ID values shall be unique for each Sensor Property ID that identifies a sensor within an element.

esp_ble_mesh_sensor_setting_t ***settings**

Parameters of the Sensor Setting state

esp_ble_mesh_sensor_cadence_t ***cadence**

The Sensor Cadence state may be not supported by sensors based on device properties referencing "non-scalar characteristics" such as "histograms" or "composite characteristics" .Parameters of the Sensor Cadence state

esp_ble_mesh_sensor_data_t **sensor_data**

Parameters of the Sensor Data state

esp_ble_mesh_sensor_series_column_t **series_column**

Parameters of the Sensor Series Column state

struct esp_ble_mesh_sensor_srv_t

User data of Sensor Server Model

Public Members

esp_ble_mesh_model_t ***model**

Pointer to the Sensor Server Model. Initialized internally.

esp_ble_mesh_server_rsp_ctrl_t **rsp_ctrl**

Response control of the server model received messages

const uint8_t **state_count**

Sensor state count

esp_ble_mesh_sensor_state_t ***states**

Parameters of the Sensor states

struct esp_ble_mesh_sensor_setup_srv_t

User data of Sensor Setup Server Model

Public Members

esp_ble_mesh_model_t ***model**

Pointer to the Sensor Setup Server Model. Initialized internally.

esp_ble_mesh_server_rsp_ctrl_t **rsp_ctrl**

Response control of the server model received messages

const uint8_t **state_count**

Sensor state count

esp_ble_mesh_sensor_state_t ***states**

Parameters of the Sensor states

struct esp_ble_mesh_state_change_sensor_cadence_set_t

Parameters of Sensor Cadence Set state change event

Public Members

uint16_t **property_id**

The value of Sensor Property ID state

uint8_t **period_divisor**

The value of Fast Cadence Period Divisor state

uint8_t **trigger_type**

The value of Status Trigger Type state

struct net_buf_simple ***trigger_delta_down**

The value of Status Trigger Delta Down state

struct net_buf_simple ***trigger_delta_up**

The value of Status Trigger Delta Up state

uint8_t **min_interval**

The value of Status Min Interval state

struct net_buf_simple ***fast_cadence_low**

The value of Fast Cadence Low state

struct net_buf_simple ***fast_cadence_high**

The value of Fast Cadence High state

struct esp_ble_mesh_state_change_sensor_setting_set_t

Parameters of Sensor Setting Set state change event

Public Members

uint16_t **property_id**

The value of Sensor Property ID state

uint16_t **setting_property_id**

The value of Sensor Setting Property ID state

struct net_buf_simple ***setting_value**

The value of Sensor Property Value state

struct esp_ble_mesh_server_recv_sensor_descriptor_get_t

Context of the received Sensor Descriptor Get message

Public Members

bool **op_en**

Indicate if optional parameters are included

uint16_t **property_id**

Property ID of a sensor (optional)

struct esp_ble_mesh_server_recv_sensor_cadence_get_t

Context of the received Sensor Cadence Get message

Public Members

uint16_t **property_id**

Property ID of a sensor

struct esp_ble_mesh_server_recv_sensor_settings_get_t

Context of the received Sensor Settings Get message

Public Members

uint16_t **property_id**

Property ID of a sensor

struct esp_ble_mesh_server_recv_sensor_setting_get_t

Context of the received Sensor Setting Get message

Public Members

uint16_t **property_id**

Property ID of a sensor

uint16_t **setting_property_id**
Setting ID identifying a setting within a sensor

struct esp_ble_mesh_server_recv_sensor_get_t
Context of the received Sensor Get message

Public Members

bool **op_en**
Indicate if optional parameters are included

uint16_t **property_id**
Property ID for the sensor (optional)

struct esp_ble_mesh_server_recv_sensor_column_get_t
Context of the received Sensor Column Get message

Public Members

uint16_t **property_id**
Property identifying a sensor

struct net_buf_simple ***raw_value_x**
Raw value identifying a column

struct esp_ble_mesh_server_recv_sensor_series_get_t
Context of the received Sensor Series Get message

Public Members

bool **op_en**
Indicate if optional parameters are included

uint16_t **property_id**
Property identifying a sensor

struct net_buf_simple ***raw_value**
Raw value containing X1 and X2 (optional)

struct esp_ble_mesh_server_recv_sensor_cadence_set_t
Context of the received Sensor Cadence Set message

Public Members

uint16_t **property_id**
Property ID for the sensor

struct net_buf_simple ***cadence**
Value of Sensor Cadence state

struct esp_ble_mesh_server_recv_sensor_setting_set_t
Context of the received Sensor Setting Set message

Public Members

uint16_t **property_id**
Property ID identifying a sensor

uint16_t **setting_property_id**
Setting ID identifying a setting within a sensor

struct net_buf_simple ***setting_raw**
Raw value for the setting

struct esp_ble_mesh_sensor_server_cb_param_t
Sensor Server Model callback parameters

Public Members

esp_ble_mesh_model_t ***model**
Pointer to Sensor Server Models

esp_ble_mesh_msg_ctx_t **ctx**
Context of the received messages

esp_ble_mesh_sensor_server_cb_value_t **value**
Value of the received Sensor Messages

Macros

ESP_BLE_MESH_MODEL_SENSOR_CLI(cli_pub, cli_data)
Define a new Sensor Client Model.

Note This API needs to be called for each element on which the application needs to have a Sensor Client Model.

Return New Sensor Client Model instance.

Parameters

- `cli_pub`: Pointer to the unique struct *esp_ble_mesh_model_pub_t*.
- `cli_data`: Pointer to the unique struct *esp_ble_mesh_client_t*.

ESP_BLE_MESH_MODEL_SENSOR_SRV(srv_pub, srv_data)

Sensor Server Models related context.

Define a new Sensor Server Model.

Note 1. The Sensor Server model is a root model. When this model is present on an element, the corresponding Sensor Setup Server model shall also be present.

1. This model shall support model publication and model subscription.

Return New Sensor Server Model instance.

Parameters

- `srv_pub`: Pointer to the unique struct *esp_ble_mesh_model_pub_t*.
- `srv_data`: Pointer to the unique struct *esp_ble_mesh_sensor_srv_t*.

ESP_BLE_MESH_MODEL_SENSOR_SETUP_SRV(srv_pub, srv_data)

Define a new Sensor Setup Server Model.

Note 1. The Sensor Setup Server model extends the Sensor Server model.

1. This model shall support model publication and model subscription.

Return New Sensor Setup Server Model instance.

Parameters

- `srv_pub`: Pointer to the unique struct *esp_ble_mesh_model_pub_t*.
- `srv_data`: Pointer to the unique struct *esp_ble_mesh_sensor_setup_srv_t*.

ESP_BLE_MESH_INVALID_SENSOR_PROPERTY_ID

Invalid Sensor Property ID

ESP_BLE_MESH_SENSOR_PROPERTY_ID_LEN

Length of Sensor Property ID

ESP_BLE_MESH_SENSOR_DESCRIPTOR_LEN

Length of Sensor Descriptor state

ESP_BLE_MESH_SENSOR_UNSPECIFIED_POS_TOLERANCE

Unspecified Sensor Positive Tolerance

ESP_BLE_MESH_SENSOR_UNSPECIFIED_NEG_TOLERANCE

Unspecified Sensor Negative Tolerance

ESP_BLE_MESH_SENSOR_NOT_APPL_MEASURE_PERIOD

Not applicable Sensor Measurement Period

ESP_BLE_MESH_SENSOR_NOT_APPL_UPDATE_INTERVAL

Not applicable Sensor Update Interval

ESP_BLE_MESH_INVALID_SENSOR_SETTING_PROPERTY_ID
: Invalid Sensor Setting Property ID

ESP_BLE_MESH_SENSOR_SETTING_PROPERTY_ID_LEN
: Length of Sensor Setting Property ID

ESP_BLE_MESH_SENSOR_SETTING_ACCESS_LEN
: Length of Sensor Setting Access

ESP_BLE_MESH_SENSOR_SETTING_ACCESS_READ
: Sensor Setting Access - Read

ESP_BLE_MESH_SENSOR_SETTING_ACCESS_READ_WRITE
: Sensor Setting Access - Read & Write

ESP_BLE_MESH_SENSOR_DIVISOR_TRIGGER_TYPE_LEN
: Length of Sensor Divisor Trigger Type

ESP_BLE_MESH_SENSOR_STATUS_MIN_INTERVAL_LEN
: Length of Sensor Status Min Interval

ESP_BLE_MESH_SENSOR_PERIOD_DIVISOR_MAX_VALUE
: Maximum value of Sensor Period Divisor

ESP_BLE_MESH_SENSOR_STATUS_MIN_INTERVAL_MAX
: Maximum value of Sensor Status Min Interval

ESP_BLE_MESH_SENSOR_STATUS_TRIGGER_TYPE_CHAR
: Sensor Status Trigger Type - Format Type of the characteristic that the Sensor Property ID state references

ESP_BLE_MESH_SENSOR_STATUS_TRIGGER_TYPE_UINT16
: Sensor Status Trigger Type - Format Type "uint16"

ESP_BLE_MESH_SENSOR_DATA_FORMAT_A
: Sensor Data Format A

ESP_BLE_MESH_SENSOR_DATA_FORMAT_B
: Sensor Data Format B

ESP_BLE_MESH_SENSOR_DATA_FORMAT_A_MPID_LEN
: MPID length of Sensor Data Format A

ESP_BLE_MESH_SENSOR_DATA_FORMAT_B_MPID_LEN
: MPID length of Sensor Data Format B

ESP_BLE_MESH_SENSOR_DATA_ZERO_LEN
: Zero length of Sensor Data.

  Note: The Length field is a 1-based uint7 value (valid range 0x0–0x7F, representing range of 1–127). The value 0x7F represents a length of zero.

ESP_BLE_MESH_GET_SENSOR_DATA_FORMAT(_data)

Get format of the sensor data.

Note Multiple sensor data may be concatenated. Make sure the _data pointer is updated before getting the format of the corresponding sensor data.

Return Format of the sensor data.

Parameters

- _data: Pointer to the start of the sensor data.

ESP_BLE_MESH_GET_SENSOR_DATA_LENGTH(_data, _fmt)

Get length of the sensor data.

Note Multiple sensor data may be concatenated. Make sure the _data pointer is updated before getting the length of the corresponding sensor data.

Return Length (zero-based) of the sensor data.

Parameters

- _data: Pointer to the start of the sensor data.
- _fmt: Format of the sensor data.

ESP_BLE_MESH_GET_SENSOR_DATA_PROPERTY_ID(_data, _fmt)

Get Sensor Property ID of the sensor data.

Note Multiple sensor data may be concatenated. Make sure the _data pointer is updated before getting Sensor Property ID of the corresponding sensor data.

Return Sensor Property ID of the sensor data.

Parameters

- _data: Pointer to the start of the sensor data.
- _fmt: Format of the sensor data.

ESP_BLE_MESH_SENSOR_DATA_FORMAT_A_MPID(_len, _id)

Generate a MPID value for sensor data with Format A.

Note 1. The Format field is 0b0 and indicates that Format A is used.

1. The Length field is a 1-based uint4 value (valid range 0x0–0xF, representing range of 1–16).
2. The Property ID is an 11-bit bit field representing 11 LSb of a Property ID.
3. This format may be used for Property Values that are not longer than 16 octets and for Property IDs less than 0x0800.

Return 2-octet MPID value for sensor data with Format A.

Parameters

- `_len`: Length of Sensor Raw value.
- `_id`: Sensor Property ID.

`ESP_BLE_MESH_SENSOR_DATA_FORMAT_B_MPID`(_len, _id)

Generate a MPID value for sensor data with Format B.

Note 1. The Format field is 0b1 and indicates Format B is used.

1. The Length field is a 1-based uint7 value (valid range 0x0–0x7F, representing range of 1–127). The value 0x7F represents a length of zero.
2. The Property ID is a 16-bit bit field representing a Property ID.
3. This format may be used for Property Values not longer than 128 octets and for any Property IDs. Property values longer than 128 octets are not supported by the Sensor Status message.
4. Exclude the generated 1-octet value, the 2-octet Sensor Property ID

Return 3-octet MPID value for sensor data with Format B.

Parameters

- `_len`: Length of Sensor Raw value.
- `_id`: Sensor Property ID.

Type Definitions

`typedef` void (*`esp_ble_mesh_sensor_client_cb_t`)(*esp_ble_mesh_sensor_client_cb_event_t* event, *esp_ble_mesh_sensor_client_cb_param_t* *param)

Bluetooth Mesh Sensor Client Model function.

Sensor Client Model callback function type

Parameters

- `event`: Event type
- `param`: Pointer to callback parameter

`typedef` void (*`esp_ble_mesh_sensor_server_cb_t`)(*esp_ble_mesh_sensor_server_cb_event_t* event, *esp_ble_mesh_sensor_server_cb_param_t* *param)

Bluetooth Mesh Sensor Server Model function.

Sensor Server Model callback function type

Parameters

- `event`: Event type
- `param`: Pointer to callback parameter

Enumerations

enum esp_ble_mesh_sensor_client_cb_event_t

This enum value is the event of Sensor Client Model

Values:

ESP_BLE_MESH_SENSOR_CLIENT_GET_STATE_EVT

ESP_BLE_MESH_SENSOR_CLIENT_SET_STATE_EVT

ESP_BLE_MESH_SENSOR_CLIENT_PUBLISH_EVT

ESP_BLE_MESH_SENSOR_CLIENT_TIMEOUT_EVT

ESP_BLE_MESH_SENSOR_CLIENT_EVT_MAX

enum esp_ble_mesh_sensor_sample_func

This enum value is value of Sensor Sampling Function

Values:

ESP_BLE_MESH_SAMPLE_FUNC_UNSPECIFIED

ESP_BLE_MESH_SAMPLE_FUNC_INSTANTANEOUS

ESP_BLE_MESH_SAMPLE_FUNC_ARITHMETIC_MEAN

ESP_BLE_MESH_SAMPLE_FUNC_RMS

ESP_BLE_MESH_SAMPLE_FUNC_MAXIMUM

ESP_BLE_MESH_SAMPLE_FUNC_MINIMUM

ESP_BLE_MESH_SAMPLE_FUNC_ACCUMULATED

ESP_BLE_MESH_SAMPLE_FUNC_COUNT

enum esp_ble_mesh_sensor_server_cb_event_t

This enum value is the event of Sensor Server Model

Values:

ESP_BLE_MESH_SENSOR_SERVER_STATE_CHANGE_EVT

1. When get_auto_rsp is set to ESP_BLE_MESH_SERVER_AUTO_RSP, no event will be callback to the application layer when Sensor Get messages are received.
2. When set_auto_rsp is set to ESP_BLE_MESH_SERVER_AUTO_RSP, this event will be callback to the application layer when Sensor Set/Set Unack messages are received.

`ESP_BLE_MESH_SENSOR_SERVER_RECV_GET_MSG_EVT`
When get_auto_rsp is set to ESP_BLE_MESH_SERVER_RSP_BY_APP, this event will be callback to the application layer when Sensor Get messages are received.

`ESP_BLE_MESH_SENSOR_SERVER_RECV_SET_MSG_EVT`
When set_auto_rsp is set to ESP_BLE_MESH_SERVER_RSP_BY_APP, this event will be callback to the application layer when Sensor Set/Set Unack messages are received.

`ESP_BLE_MESH_SENSOR_SERVER_EVT_MAX`

Lighting Client/Server Models

Header File

- bt/esp_ble_mesh/api/models/include/esp_ble_mesh_time_scene_model_api.h

Functions

esp_err_t **esp_ble_mesh_register_time_scene_client_callback**(*esp_ble_mesh_time_scene_client_cb_t callback*)

Register BLE Mesh Time Scene Client Model callback.

Return ESP_OK on success or error code otherwise.

Parameters

- `callback`: Pointer to the callback function.

esp_err_t **esp_ble_mesh_time_scene_client_get_state**(*esp_ble_mesh_client_common_param_t* **params*, *esp_ble_mesh_time_scene_client_get_state_t* **get_state*)

Get the value of Time Scene Server Model states using the Time Scene Client Model get messages.

Note If you want to know the opcodes and corresponding meanings accepted by this API, please refer to esp_ble_mesh_time_scene_message_opcode_t in esp_ble_mesh_defs.h

Return ESP_OK on success or error code otherwise.

Parameters

- `params`: Pointer to BLE Mesh common client parameters.
- `get_state`: Pointer to time scene get message value. Shall not be set to NULL.

esp_err_t **esp_ble_mesh_time_scene_client_set_state**(*esp_ble_mesh_client_common_param_t* **params*, *esp_ble_mesh_time_scene_client_set_state_t* **set_state*)

Set the value of Time Scene Server Model states using the Time Scene Client Model set messages.

Note If you want to know the opcodes and corresponding meanings accepted by this API, please refer to esp_ble_mesh_time_scene_message_opcode_t in esp_ble_mesh_defs.h

Return ESP_OK on success or error code otherwise.

Parameters

- `params`: Pointer to BLE Mesh common client parameters.
- `set_state`: Pointer to time scene set message value. Shall not be set to NULL.

esp_err_t **esp_ble_mesh_register_time_scene_server_callback**(*esp_ble_mesh_time_scene_server_cb_t callback*)

Register BLE Mesh Time and Scenes Server Model callback.

Return ESP_OK on success or error code otherwise.

Parameters

- `callback`: Pointer to the callback function.

Unions

union esp_ble_mesh_time_scene_client_get_state_t

#include <esp_ble_mesh_time_scene_model_api.h> Time Scene Client Model get message union.

Public Members

esp_ble_mesh_scheduler_act_get_t **scheduler_act_get**

For ESP_BLE_MESH_MODEL_OP_SCHEDULER_ACT_GET

union esp_ble_mesh_time_scene_client_set_state_t

#include <esp_ble_mesh_time_scene_model_api.h> Time Scene Client Model set message union.

Public Members

esp_ble_mesh_time_set_t **time_set**

For ESP_BLE_MESH_MODEL_OP_TIME_SET

esp_ble_mesh_time_zone_set_t **time_zone_set**

For ESP_BLE_MESH_MODEL_OP_TIME_ZONE_SET

esp_ble_mesh_tai_utc_delta_set_t **tai_utc_delta_set**

For ESP_BLE_MESH_MODEL_OP_TAI_UTC_DELTA_SET

esp_ble_mesh_time_role_set_t **time_role_set**

For ESP_BLE_MESH_MODEL_OP_TIME_ROLE_SET

esp_ble_mesh_scene_store_t **scene_store**

For ESP_BLE_MESH_MODEL_OP_SCENE_STORE & ESP_BLE_MESH_MODEL_OP_SCENE_STORE

esp_ble_mesh_scene_recall_t **scene_recall**

For ESP_BLE_MESH_MODEL_OP_SCENE_RECALL & ESP_BLE_MESH_MODEL_OP_SCENE_RECA

esp_ble_mesh_scene_delete_t **scene_delete**

For ESP_BLE_MESH_MODEL_OP_SCENE_DELETE & ESP_BLE_MESH_MODEL_OP_SCENE_DELE

esp_ble_mesh_scheduler_act_set_t **scheduler_act_set**

For ESP_BLE_MESH_MODEL_OP_SCHEDULER_ACT_SET & ESP_BLE_MESH_MODEL_OP_SCHEDULER_ACT_SET_UNACK

union esp_ble_mesh_time_scene_client_status_cb_t

#include <esp_ble_mesh_time_scene_model_api.h> Time Scene Client Model received message union.

Public Members

esp_ble_mesh_time_status_cb_t **time_status**

For ESP_BLE_MESH_MODEL_OP_TIME_STATUS

esp_ble_mesh_time_zone_status_cb_t **time_zone_status**

For ESP_BLE_MESH_MODEL_OP_TIME_ZONE_STATUS

esp_ble_mesh_tai_utc_delta_status_cb_t **tai_utc_delta_status**

For ESP_BLE_MESH_MODEL_OP_TAI_UTC_DELTA_STATUS

esp_ble_mesh_time_role_status_cb_t **time_role_status**

For ESP_BLE_MESH_MODEL_OP_TIME_ROLE_STATUS

esp_ble_mesh_scene_status_cb_t **scene_status**

For ESP_BLE_MESH_MODEL_OP_SCENE_STATUS

esp_ble_mesh_scene_register_status_cb_t **scene_register_status**

For ESP_BLE_MESH_MODEL_OP_SCENE_REGISTER_STATUS

esp_ble_mesh_scheduler_status_cb_t **scheduler_status**

For ESP_BLE_MESH_MODEL_OP_SCHEDULER_STATUS

esp_ble_mesh_scheduler_act_status_cb_t **scheduler_act_status**

For ESP_BLE_MESH_MODEL_OP_SCHEDULER_ACT_STATUS

union esp_ble_mesh_time_scene_server_state_change_t

#include <esp_ble_mesh_time_scene_model_api.h> Time Scene Server Model state change value union.

Public Members

esp_ble_mesh_state_change_time_set_t **time_set**

The recv_op in ctx can be used to decide which state is changed.Time Set

esp_ble_mesh_state_change_time_status_t **time_status**

Time Status

esp_ble_mesh_state_change_time_zone_set_t **time_zone_set**

Time Zone Set

esp_ble_mesh_state_change_tai_utc_delta_set_t **tai_utc_delta_set**

TAI UTC Delta Set

esp_ble_mesh_state_change_time_role_set_t **time_role_set**

Time Role Set

esp_ble_mesh_state_change_scene_store_t **scene_store**

Scene Store

esp_ble_mesh_state_change_scene_recall_t **scene_recall**

Scene Recall

esp_ble_mesh_state_change_scene_delete_t **scene_delete**

Scene Delete

esp_ble_mesh_state_change_scheduler_act_set_t **scheduler_act_set**

Scheduler Action Set

union esp_ble_mesh_time_scene_server_recv_get_msg_t

#include <esp_ble_mesh_time_scene_model_api.h> Time Scene Server Model received get message union.

Public Members

esp_ble_mesh_server_recv_scheduler_act_get_t **scheduler_act**

Scheduler Action Get

union esp_ble_mesh_time_scene_server_recv_set_msg_t

#include <esp_ble_mesh_time_scene_model_api.h> Time Scene Server Model received set message union.

Public Members

esp_ble_mesh_server_recv_time_set_t **time**

Time Set

esp_ble_mesh_server_recv_time_zone_set_t **time_zone**

Time Zone Set

esp_ble_mesh_server_recv_tai_utc_delta_set_t **tai_utc_delta**

TAI-UTC Delta Set

esp_ble_mesh_server_recv_time_role_set_t **time_role**

Time Role Set

esp_ble_mesh_server_recv_scene_store_t **scene_store**

Scene Store/Scene Store Unack

esp_ble_mesh_server_recv_scene_recall_t **scene_recall**

Scene Recall/Scene Recall Unack

esp_ble_mesh_server_recv_scene_delete_t **scene_delete**

Scene Delete/Scene Delete Unack

esp_ble_mesh_server_recv_scheduler_act_set_t **scheduler_act**

Scheduler Action Set/Scheduler Action Set Unack

union esp_ble_mesh_time_scene_server_recv_status_msg_t

#include <esp_ble_mesh_time_scene_model_api.h> Time Scene Server Model received status message union.

Public Members

esp_ble_mesh_server_recv_time_status_t **time_status**

Time Status

union esp_ble_mesh_time_scene_server_cb_value_t

#include <esp_ble_mesh_time_scene_model_api.h> Time Scene Server Model callback value union.

Public Members

esp_ble_mesh_time_scene_server_state_change_t **state_change**

ESP_BLE_MESH_TIME_SCENE_SERVER_STATE_CHANGE_EVT

esp_ble_mesh_time_scene_server_recv_get_msg_t **get**

ESP_BLE_MESH_TIME_SCENE_SERVER_RECV_GET_MSG_EVT

esp_ble_mesh_time_scene_server_recv_set_msg_t **set**

ESP_BLE_MESH_TIME_SCENE_SERVER_RECV_SET_MSG_EVT

esp_ble_mesh_time_scene_server_recv_status_msg_t **status**

ESP_BLE_MESH_TIME_SCENE_SERVER_RECV_STATUS_MSG_EVT

Structures

struct esp_ble_mesh_time_set_t

Bluetooth Mesh Time Scene Client Model Get and Set parameters structure.

Parameters of Time Set

Public Members

uint8_t **tai_seconds**[5]

The current TAI time in seconds

uint8_t **sub_second**

The sub-second time in units of 1/256 second

uint8_t **uncertainty**

The estimated uncertainty in 10-millisecond steps

uint16_t **time_authority**

0 = No Time Authority, 1 = Time Authority

uint16_t **tai_utc_delta**

Current difference between TAI and UTC in seconds

uint8_t **time_zone_offset**

The local time zone offset in 15-minute increments

struct esp_ble_mesh_time_zone_set_t

Parameters of Time Zone Set

Public Members

uint8_t **time_zone_offset_new**

Upcoming local time zone offset

uint8_t **tai_zone_change**[5]

TAI Seconds time of the upcoming Time Zone Offset change

struct esp_ble_mesh_tai_utc_delta_set_t

Parameters of TAI-UTC Delta Set

Public Members

uint16_t **tai_utc_delta_new**

Upcoming difference between TAI and UTC in seconds

uint16_t **padding**

Always 0b0. Other values are Prohibited.

uint8_t **tai_delta_change**[5]
TAI Seconds time of the upcoming TAI-UTC Delta change

struct esp_ble_mesh_time_role_set_t
Parameter of Time Role Set

Public Members

uint8_t **time_role**
The Time Role for the element

struct esp_ble_mesh_scene_store_t
Parameter of Scene Store

Public Members

uint16_t **scene_number**
The number of scenes to be stored

struct esp_ble_mesh_scene_recall_t
Parameters of Scene Recall

Public Members

bool **op_en**
Indicate if optional parameters are included

uint16_t **scene_number**
The number of scenes to be recalled

uint8_t **tid**
Transaction ID

uint8_t **trans_time**
Time to complete state transition (optional)

uint8_t **delay**
Indicate message execution delay (C.1)

struct esp_ble_mesh_scene_delete_t
Parameter of Scene Delete

Public Members

uint16_t **scene_number**
The number of scenes to be deleted

struct esp_ble_mesh_scheduler_act_get_t

Parameter of Scheduler Action Get

Public Members

uint8_t **index**

Index of the Schedule Register entry to get

struct esp_ble_mesh_scheduler_act_set_t

Parameters of Scheduler Action Set

Public Members

uint64_t **index**

Index of the Schedule Register entry to set

uint64_t **year**

Scheduled year for the action

uint64_t **month**

Scheduled month for the action

uint64_t **day**

Scheduled day of the month for the action

uint64_t **hour**

Scheduled hour for the action

uint64_t **minute**

Scheduled minute for the action

uint64_t **second**

Scheduled second for the action

uint64_t **day_of_week**

Schedule days of the week for the action

uint64_t **action**

Action to be performed at the scheduled time

uint64_t **trans_time**

Transition time for this action

uint16_t **scene_number**

Transition time for this action

struct esp_ble_mesh_time_status_cb_t

Bluetooth Mesh Time Scene Client Model Get and Set callback parameters structure.

Parameters of Time Status

Public Members

uint8_t **tai_seconds**[5]
The current TAI time in seconds

uint8_t **sub_second**
The sub-second time in units of 1/256 second

uint8_t **uncertainty**
The estimated uncertainty in 10-millisecond steps

uint16_t **time_authority**
0 = No Time Authority, 1 = Time Authority

uint16_t **tai_utc_delta**
Current difference between TAI and UTC in seconds

uint8_t **time_zone_offset**
The local time zone offset in 15-minute increments

struct esp_ble_mesh_time_zone_status_cb_t
Parameters of Time Zone Status

Public Members

uint8_t **time_zone_offset_curr**
Current local time zone offset

uint8_t **time_zone_offset_new**
Upcoming local time zone offset

uint8_t **tai_zone_change**[5]
TAI Seconds time of the upcoming Time Zone Offset change

struct esp_ble_mesh_tai_utc_delta_status_cb_t
Parameters of TAI-UTC Delta Status

Public Members

uint16_t **tai_utc_delta_curr**
Current difference between TAI and UTC in seconds

uint16_t **padding_1**
Always 0b0. Other values are Prohibited.

uint16_t **tai_utc_delta_new**
Upcoming difference between TAI and UTC in seconds

uint16_t **padding_2**

Always 0b0. Other values are Prohibited.

uint8_t **tai_delta_change**[5]

TAI Seconds time of the upcoming TAI-UTC Delta change

struct esp_ble_mesh_time_role_status_cb_t

Parameter of Time Role Status

Public Members

uint8_t **time_role**

The Time Role for the element

struct esp_ble_mesh_scene_status_cb_t

Parameters of Scene Status

Public Members

bool **op_en**

Indicate if optional parameters are included

uint8_t **status_code**

Status code of the last operation

uint16_t **current_scene**

Scene Number of the current scene

uint16_t **target_scene**

Scene Number of the target scene (optional)

uint8_t **remain_time**

Time to complete state transition (C.1)

struct esp_ble_mesh_scene_register_status_cb_t

Parameters of Scene Register Status

Public Members

uint8_t **status_code**

Status code for the previous operation

uint16_t **current_scene**

Scene Number of the current scene

struct net_buf_simple ***scenes**

A list of scenes stored within an element

struct esp_ble_mesh_scheduler_status_cb_t

Parameter of Scheduler Status

Public Members

uint16_t **schedules**

Bit field indicating defined Actions in the Schedule Register

struct esp_ble_mesh_scheduler_act_status_cb_t

Parameters of Scheduler Action Status

Public Members

uint64_t **index**

Enumerates (selects) a Schedule Register entry

uint64_t **year**

Scheduled year for the action

uint64_t **month**

Scheduled month for the action

uint64_t **day**

Scheduled day of the month for the action

uint64_t **hour**

Scheduled hour for the action

uint64_t **minute**

Scheduled minute for the action

uint64_t **second**

Scheduled second for the action

uint64_t **day_of_week**

Schedule days of the week for the action

uint64_t **action**

Action to be performed at the scheduled time

uint64_t **trans_time**

Transition time for this action

uint16_t **scene_number**

Transition time for this action

struct esp_ble_mesh_time_scene_client_cb_param_t

Time Scene Client Model callback parameters

Public Members

int **error_code**

Appropriate error code

esp_ble_mesh_client_common_param_t ***params**

The client common parameters.

esp_ble_mesh_time_scene_client_status_cb_t **status_cb**

The scene status message callback values

struct esp_ble_mesh_time_state_t

Parameters of Time state

Public Members

uint8_t **tai_seconds**[5]

The value of the TAI Seconds state

uint8_t **subsecond**

The value of the Subsecond field

uint8_t **uncertainty**

The value of the Uncertainty field

uint8_t **time_zone_offset_curr**

The value of the Time Zone Offset Current field

uint8_t **time_zone_offset_new**

The value of the Time Zone Offset New state

uint8_t **tai_zone_change**[5]

The value of the TAI of Zone Chaneg field

uint16_t **time_authority**

The value of the Time Authority bit

uint16_t **tai_utc_delta_curr**

The value of the TAI-UTC Delta Current state

uint16_t **tai_utc_delta_new**

The value of the TAI-UTC Delta New state

uint8_t **tai_delta_change**[5]

The value of the TAI of Delta Change field

struct *esp_ble_mesh_time_state_t*::[**anonymous**] **time**

Parameters of the Time state

uint8_t **time_role**

The value of the Time Role state

struct esp_ble_mesh_time_srv_t

User data of Time Server Model

Public Members

esp_ble_mesh_model_t ***model**

Pointer to the Time Server Model. Initialized internally.

esp_ble_mesh_server_rsp_ctrl_t **rsp_ctrl**

Response control of the server model received messages

esp_ble_mesh_time_state_t ***state**

Parameters of the Time state

struct esp_ble_mesh_time_setup_srv_t

User data of Time Setup Server Model

Public Members

esp_ble_mesh_model_t ***model**

Pointer to the Time Setup Server Model. Initialized internally.

esp_ble_mesh_server_rsp_ctrl_t **rsp_ctrl**

Response control of the server model received messages

esp_ble_mesh_time_state_t ***state**

Parameters of the Time state

struct esp_ble_mesh_scene_register_t

1. Scene Store is an operation of storing values of a present state of an element.
2. The structure and meaning of the stored state is determined by a model. States to be stored are specified by each model.
3. The Scene Store operation shall persistently store all values of all states marked as Stored with Scene for all models present on all elements of a node.
4. If a model is extending another model, the extending model shall determine the Stored with Scene behavior of that model.Parameters of Scene Register state

Public Members

uint16_t **scene_number**

The value of the Scene Number

uint8_t **scene_type**

The value of the Scene Type

struct net_buf_simple ***scene_value**

Scene value may use a union to represent later, the union contains structures of all the model states which can be stored in a scene.The value of the Scene Value

struct esp_ble_mesh_scenes_state_t

Parameters of Scenes state.

Scenes serve as memory banks for storage of states (e.g., a power level or a light level/color). Values of states of an element can be stored as a scene and can be recalled later from the scene memory.

A scene is represented by a Scene Number, which is a 16-bit non-zero, mesh-wide value. (There can be a maximum of 65535 scenes in a mesh network.) The meaning of a scene, as well as the state storage container associated with it, are determined by a model.

The Scenes state change may start numerous parallel model transitions. In that case, each individual model handles the transition internally.

The scene transition is defined as a group of individual model transitions started by a Scene Recall operation. The scene transition is in progress when at least one transition from the group of individual model transitions is in progress.

Public Members

const uint16_t **scene_count**

The Scenes state' s scene count

esp_ble_mesh_scene_register_t ***scenes**

Parameters of the Scenes state

uint16_t **current_scene**

The Current Scene state is a 16-bit value that contains either the Scene Number of the currently active scene or a value of 0x0000 when no scene is active.

When a Scene Store operation or a Scene Recall operation completes with success, the Current Scene state value shall be to the Scene Number used during that operation.

When the Current Scene Number is deleted from a Scene Register state as a result of Scene Delete operation, the Current Scene state shall be set to 0x0000.

When any of the element' s state that is marked as "Stored with Scene" has changed not as a result of a Scene Recall operation, the value of the Current Scene state shall be set to 0x0000.

When a scene transition is in progress, the value of the Current Scene state shall be set to 0x0000.The value of the Current Scene state

uint16_t **target_scene**

The Target Scene state is a 16-bit value that contains the target Scene Number when a scene transition is in progress.

When the scene transition is in progress and the target Scene Number is deleted from a Scene Register state as a result of Scene Delete operation, the Target Scene state shall be set to 0x0000.

When the scene transition is in progress and a new Scene Number is stored in the Scene Register as a result of Scene Store operation, the Target Scene state shall be set to the new Scene Number.

When the scene transition is not in progress, the value of the Target Scene state shall be set to 0x0000.The value of the Target Scene state

uint8_t **status_code**

The status code of the last scene operation

bool **in_progress**

Indicate if the scene transition is in progress

struct esp_ble_mesh_scene_srv_t

User data of Scene Server Model

Public Members

esp_ble_mesh_model_t ***model**

Pointer to the Scene Server Model. Initialized internally.

esp_ble_mesh_server_rsp_ctrl_t **rsp_ctrl**

Response control of the server model received messages

esp_ble_mesh_scenes_state_t ***state**

Parameters of the Scenes state

esp_ble_mesh_last_msg_info_t **last**

Parameters of the last received set message

esp_ble_mesh_state_transition_t **transition**

Parameters of state transition

struct esp_ble_mesh_scene_setup_srv_t

User data of Scene Setup Server Model

Public Members

esp_ble_mesh_model_t ***model**

Pointer to the Scene Setup Server Model. Initialized internally.

esp_ble_mesh_server_rsp_ctrl_t **rsp_ctrl**

Response control of the server model received messages

esp_ble_mesh_scenes_state_t ***state**

Parameters of the Scenes state

struct esp_ble_mesh_schedule_register_t

Parameters of Scheduler Register state

Public Members

bool **in_use**

Indicate if the registered schedule is in use

uint64_t **year**

The value of Scheduled year for the action

uint64_t **month**

The value of Scheduled month for the action

uint64_t **day**

The value of Scheduled day of the month for the action

uint64_t **hour**

The value of Scheduled hour for the action

uint64_t **minute**

The value of Scheduled minute for the action

uint64_t **second**

The value of Scheduled second for the action

uint64_t **day_of_week**

The value of Schedule days of the week for the action

uint64_t **action**

The value of Action to be performed at the scheduled time

uint64_t **trans_time**

The value of Transition time for this action

uint16_t **scene_number**

The value of Scene Number to be used for some actions

struct esp_ble_mesh_scheduler_state_t

Parameters of Scheduler state

Public Members

const uint8_t **schedule_count**

Scheduler count

esp_ble_mesh_schedule_register_t ***schedules**

Up to 16 scheduled entries

struct esp_ble_mesh_scheduler_srv_t

User data of Scheduler Server Model

Public Members

esp_ble_mesh_model_t ***model**

Pointer to the Scheduler Server Model. Initialized internally.

esp_ble_mesh_server_rsp_ctrl_t **rsp_ctrl**

Response control of the server model received messages

esp_ble_mesh_scheduler_state_t ***state**

Parameters of the Scheduler state

struct esp_ble_mesh_scheduler_setup_srv_t

User data of Scheduler Setup Server Model

Public Members

esp_ble_mesh_model_t ***model**

Pointer to the Scheduler Setup Server Model. Initialized internally.

esp_ble_mesh_server_rsp_ctrl_t **rsp_ctrl**

Response control of the server model received messages

esp_ble_mesh_scheduler_state_t ***state**

Parameters of the Scheduler state

struct esp_ble_mesh_state_change_time_set_t

Parameters of Time Set state change event

Public Members

uint8_t **tai_seconds**[5]

The current TAI time in seconds

uint8_t **subsecond**

The sub-second time in units of 1/256 second

uint8_t **uncertainty**

The estimated uncertainty in 10-millisecond steps

uint16_t **time_authority**

0 = No Time Authority, 1 = Time Authority

uint16_t **tai_utc_delta_curr**

Current difference between TAI and UTC in seconds

uint8_t **time_zone_offset_curr**

The local time zone offset in 15-minute increments

struct esp_ble_mesh_state_change_time_status_t

Parameters of Time Status state change event

Public Members

uint8_t **tai_seconds**[5]

The current TAI time in seconds

uint8_t **subsecond**

The sub-second time in units of 1/256 second

uint8_t **uncertainty**

The estimated uncertainty in 10-millisecond steps

uint16_t **time_authority**

0 = No Time Authority, 1 = Time Authority

uint16_t **tai_utc_delta_curr**

Current difference between TAI and UTC in seconds

uint8_t **time_zone_offset_curr**

The local time zone offset in 15-minute increments

struct esp_ble_mesh_state_change_time_zone_set_t

Parameters of Time Zone Set state change event

Public Members

uint8_t **time_zone_offset_new**

Upcoming local time zone offset

uint8_t **tai_zone_change**[5]

TAI Seconds time of the upcoming Time Zone Offset change

struct esp_ble_mesh_state_change_tai_utc_delta_set_t

Parameters of TAI UTC Delta Set state change event

Public Members

uint16_t **tai_utc_delta_new**

Upcoming difference between TAI and UTC in seconds

uint8_t **tai_delta_change**[5]

TAI Seconds time of the upcoming TAI-UTC Delta change

struct esp_ble_mesh_state_change_time_role_set_t

Parameter of Time Role Set state change event

Public Members

uint8_t **time_role**

The Time Role for the element

struct esp_ble_mesh_state_change_scene_store_t

Parameter of Scene Store state change event

Public Members

uint16_t **scene_number**

The number of scenes to be stored

struct esp_ble_mesh_state_change_scene_recall_t

Parameter of Scene Recall state change event

Public Members

uint16_t **scene_number**

The number of scenes to be recalled

struct esp_ble_mesh_state_change_scene_delete_t

Parameter of Scene Delete state change event

Public Members

uint16_t **scene_number**

The number of scenes to be deleted

struct esp_ble_mesh_state_change_scheduler_act_set_t

Parameter of Scheduler Action Set state change event

Public Members

uint64_t **index**

Index of the Schedule Register entry to set

uint64_t **year**

Scheduled year for the action

uint64_t **month**

Scheduled month for the action

uint64_t **day**

Scheduled day of the month for the action

uint64_t **hour**

Scheduled hour for the action

uint64_t **minute**

Scheduled minute for the action

uint64_t **second**

Scheduled second for the action

uint64_t **day_of_week**

Schedule days of the week for the action

uint64_t **action**

Action to be performed at the scheduled time

uint64_t **trans_time**

Transition time for this action

uint16_t **scene_number**

Scene number to be used for some actions

struct esp_ble_mesh_server_recv_scheduler_act_get_t

Context of the received Scheduler Action Get message

Public Members

uint8_t **index**

Index of the Schedule Register entry to get

struct esp_ble_mesh_server_recv_time_set_t

Context of the received Time Set message

Public Members

uint8_t **tai_seconds**[5]

The current TAI time in seconds

uint8_t **subsecond**

The sub-second time in units of 1/256 second

uint8_t **uncertainty**

The estimated uncertainty in 10-millisecond steps

uint16_t **time_authority**

0 = No Time Authority, 1 = Time Authority

uint16_t **tai_utc_delta**

Current difference between TAI and UTC in seconds

uint8_t **time_zone_offset**

The local time zone offset in 15-minute increments

struct esp_ble_mesh_server_recv_time_zone_set_t

Context of the received Time Zone Set message

Public Members

uint8_t **time_zone_offset_new**

Upcoming local time zone offset

uint8_t **tai_zone_change**[5]

TAI Seconds time of the upcoming Time Zone Offset change

struct esp_ble_mesh_server_recv_tai_utc_delta_set_t

Context of the received TAI UTC Delta Set message

Public Members

uint16_t **tai_utc_delta_new**

Upcoming difference between TAI and UTC in seconds

uint16_t **padding**

Always 0b0. Other values are Prohibited.

uint8_t **tai_delta_change**[5]

TAI Seconds time of the upcoming TAI-UTC Delta change

struct esp_ble_mesh_server_recv_time_role_set_t

Context of the received Time Role Set message

Public Members

uint8_t **time_role**

The Time Role for the element

struct esp_ble_mesh_server_recv_scene_store_t

Context of the received Scene Store message

Public Members

uint16_t **scene_number**

The number of scenes to be stored

struct esp_ble_mesh_server_recv_scene_recall_t

Context of the received Scene Recall message

Public Members

bool **op_en**

Indicate if optional parameters are included

uint16_t **scene_number**

The number of scenes to be recalled

uint8_t **tid**

Transaction ID

uint8_t **trans_time**

Time to complete state transition (optional)

uint8_t **delay**

Indicate message execution delay (C.1)

struct esp_ble_mesh_server_recv_scene_delete_t

Context of the received Scene Delete message

Public Members

uint16_t **scene_number**

The number of scenes to be deleted

struct esp_ble_mesh_server_recv_scheduler_act_set_t

Context of the received Scheduler Action Set message

Public Members

uint64_t **index**

Index of the Schedule Register entry to set

uint64_t **year**

Scheduled year for the action

uint64_t **month**

Scheduled month for the action

uint64_t **day**

Scheduled day of the month for the action

uint64_t **hour**

Scheduled hour for the action

uint64_t **minute**

Scheduled minute for the action

uint64_t **second**

Scheduled second for the action

uint64_t **day_of_week**

Schedule days of the week for the action

uint64_t **action**

Action to be performed at the scheduled time

uint64_t **trans_time**

Transition time for this action

uint16_t **scene_number**

Scene number to be used for some actions

struct esp_ble_mesh_server_recv_time_status_t

Context of the received Time Status message

Public Members

uint8_t **tai_seconds**[5]

The current TAI time in seconds

uint8_t **subsecond**

The sub-second time in units of 1/256 second

uint8_t **uncertainty**

The estimated uncertainty in 10-millisecond steps

uint16_t **time_authority**

0 = No Time Authority, 1 = Time Authority

uint16_t **tai_utc_delta**

Current difference between TAI and UTC in seconds

uint8_t **time_zone_offset**

The local time zone offset in 15-minute increments

struct esp_ble_mesh_time_scene_server_cb_param_t

Time Scene Server Model callback parameters

Public Members

esp_ble_mesh_model_t ***model**

Pointer to Time and Scenes Server Models

esp_ble_mesh_msg_ctx_t **ctx**

Context of the received messages

esp_ble_mesh_time_scene_server_cb_value_t **value**

Value of the received Time and Scenes Messages

Macros

ESP_BLE_MESH_MODEL_TIME_CLI(cli_pub, cli_data)

Define a new Time Client Model.

Note This API needs to be called for each element on which the application needs to have a Time Client Model.

Return New Time Client Model instance.

Parameters

- **cli_pub**: Pointer to the unique struct *esp_ble_mesh_model_pub_t*.
- **cli_data**: Pointer to the unique struct *esp_ble_mesh_client_t*.

ESP_BLE_MESH_MODEL_SCENE_CLI(cli_pub, cli_data)

Define a new Scene Client Model.

Note This API needs to be called for each element on which the application needs to have a Scene Client Model.

Return New Scene Client Model instance.

Parameters

- **cli_pub**: Pointer to the unique struct *esp_ble_mesh_model_pub_t*.
- **cli_data**: Pointer to the unique struct *esp_ble_mesh_client_t*.

ESP_BLE_MESH_MODEL_SCHEDULER_CLI(cli_pub, cli_data)

Define a new Scheduler Client Model.

Note This API needs to be called for each element on which the application needs to have a Scheduler Client Model.

Return New Scheduler Client Model instance.

Parameters

- `cli_pub`: Pointer to the unique struct *esp_ble_mesh_model_pub_t*.
- `cli_data`: Pointer to the unique struct *esp_ble_mesh_client_t*.

`ESP_BLE_MESH_MODEL_TIME_SRV`(srv_pub, srv_data)

Time Scene Server Models related context.

Define a new Time Server Model.

Note 1. The Time Server model is a root model. When this model is present on an Element, the corresponding Time Setup Server model shall also be present.

1. This model shall support model publication and model subscription.

Return New Time Server Model instance.

Parameters

- `srv_pub`: Pointer to the unique struct *esp_ble_mesh_model_pub_t*.
- `srv_data`: Pointer to the unique struct *esp_ble_mesh_time_srv_t*.

`ESP_BLE_MESH_MODEL_TIME_SETUP_SRV`(srv_data)

Define a new Time Setup Server Model.

Note 1. The Time Setup Server model extends the Time Server model. Time is sensitive information that is propagated across a mesh network.

1. Only an authorized Time Client should be allowed to change the Time and Time Role states. A dedicated application key Bluetooth SIG Proprietary should be used on the Time Setup Server to restrict access to the server to only authorized Time Clients.
2. This model does not support subscribing nor publishing.

Return New Time Setup Server Model instance.

Parameters

- `srv_data`: Pointer to the unique struct *esp_ble_mesh_time_setup_srv_t*.

`ESP_BLE_MESH_MODEL_SCENE_SRV`(srv_pub, srv_data)

Define a new Scene Server Model.

Note 1. The Scene Server model is a root model. When this model is present on an Element, the corresponding Scene Setup Server model shall also be present.

1. This model shall support model publication and model subscription.
2. The model may be present only on the Primary element of a node.

Return New Scene Server Model instance.

Parameters

- `srv_pub`: Pointer to the unique struct *esp_ble_mesh_model_pub_t*.
- `srv_data`: Pointer to the unique struct *esp_ble_mesh_scene_srv_t*.

`ESP_BLE_MESH_MODEL_SCENE_SETUP_SRV`(srv_pub, srv_data)

Define a new Scene Setup Server Model.

Note 1. The Scene Setup Server model extends the Scene Server model and the Generic Default Transition Time Server model.

1. This model shall support model subscription.
2. The model may be present only on the Primary element of a node.

Return New Scene Setup Server Model instance.

Parameters

- `srv_pub`: Pointer to the unique struct *esp_ble_mesh_model_pub_t*.
- `srv_data`: Pointer to the unique struct *esp_ble_mesh_scene_setup_srv_t*.

`ESP_BLE_MESH_MODEL_SCHEDULER_SRV`(srv_pub, srv_data)

Define a new Scheduler Server Model.

Note 1. The Scheduler Server model extends the Scene Server model. When this model is present on an Element, the corresponding Scheduler Setup Server model shall also be present.

1. This model shall support model publication and model subscription.
2. The model may be present only on the Primary element of a node.
3. The model requires the Time Server model shall be present on the element.

Return New Scheduler Server Model instance.

Parameters

- `srv_pub`: Pointer to the unique struct *esp_ble_mesh_model_pub_t*.
- `srv_data`: Pointer to the unique struct *esp_ble_mesh_scheduler_srv_t*.

`ESP_BLE_MESH_MODEL_SCHEDULER_SETUP_SRV`(srv_pub, srv_data)

Define a new Scheduler Setup Server Model.

Note 1. The Scheduler Setup Server model extends the Scheduler Server and the Scene Setup Server models.

1. This model shall support model subscription.
2. The model may be present only on the Primary element of a node.

Return New Scheduler Setup Server Model instance.

Parameters

- `srv_pub`: Pointer to the unique struct *esp_ble_mesh_model_pub_t*.
- `srv_data`: Pointer to the unique struct *esp_ble_mesh_scheduler_setup_srv_t*.

`ESP_BLE_MESH_UNKNOWN_TAI_SECONDS`
Unknown TAI Seconds

`ESP_BLE_MESH_UNKNOWN_TAI_ZONE_CHANGE`
Unknown TAI of Zone Change

`ESP_BLE_MESH_UNKNOWN_TAI_DELTA_CHANGE`
Unknown TAI of Delta Change

`ESP_BLE_MESH_TAI_UTC_DELTA_MAX_VALUE`
Maximum TAI-UTC Delta value

`ESP_BLE_MESH_TAI_SECONDS_LEN`
Length of TAI Seconds

`ESP_BLE_MESH_TAI_OF_ZONE_CHANGE_LEN`
Length of TAI of Zone Change

`ESP_BLE_MESH_TAI_OF_DELTA_CHANGE_LEN`
Length of TAI of Delta Change

`ESP_BLE_MESH_INVALID_SCENE_NUMBER`
Invalid Scene Number

`ESP_BLE_MESH_SCENE_NUMBER_LEN`
Length of the Scene Number

`ESP_BLE_MESH_SCHEDULE_YEAR_ANY_YEAR`
Any year of the Scheduled year

`ESP_BLE_MESH_SCHEDULE_DAY_ANY_DAY`
Any day of the Scheduled day

`ESP_BLE_MESH_SCHEDULE_HOUR_ANY_HOUR`
Any hour of the Scheduled hour

`ESP_BLE_MESH_SCHEDULE_HOUR_ONCE_A_DAY`
Any hour of the Scheduled Day

`ESP_BLE_MESH_SCHEDULE_SEC_ANY_OF_HOUR`
Any minute of the Scheduled hour

`ESP_BLE_MESH_SCHEDULE_SEC_EVERY_15_MIN`
Every 15 minutes of the Scheduled hour

ESP_BLE_MESH_SCHEDULE_SEC_EVERY_20_MIN
: Every 20 minutes of the Scheduled hour

ESP_BLE_MESH_SCHEDULE_SEC_ONCE_AN_HOUR
: Once of the Scheduled hour

ESP_BLE_MESH_SCHEDULE_SEC_ANY_OF_MIN
: Any second of the Scheduled minute

ESP_BLE_MESH_SCHEDULE_SEC_EVERY_15_SEC
: Every 15 seconds of the Scheduled minute

ESP_BLE_MESH_SCHEDULE_SEC_EVERY_20_SEC
: Every 20 seconds of the Scheduled minute

ESP_BLE_MESH_SCHEDULE_SEC_ONCE_AN_MIN
: Once of the Scheduled minute

ESP_BLE_MESH_SCHEDULE_ACT_TURN_OFF
: Scheduled Action - Turn Off

ESP_BLE_MESH_SCHEDULE_ACT_TURN_ON
: Scheduled Action - Turn On

ESP_BLE_MESH_SCHEDULE_ACT_SCENE_RECALL
: Scheduled Action - Scene Recall

ESP_BLE_MESH_SCHEDULE_ACT_NO_ACTION
: Scheduled Action - No Action

ESP_BLE_MESH_SCHEDULE_SCENE_NO_SCENE
: Scheduled Scene - No Scene

ESP_BLE_MESH_SCHEDULE_ENTRY_MAX_INDEX
: Maximum number of Scheduled entries

ESP_BLE_MESH_TIME_NONE
: Time Role - None

ESP_BLE_MESH_TIME_AUTHORITY
: Time Role - Mesh Time Authority

ESP_BLE_MESH_TIME_RELAY
: Time Role - Mesh Time Relay

ESP_BLE_MESH_TIME_CLINET
: Time Role - Mesh Time Client

ESP_BLE_MESH_SCENE_SUCCESS
: Scene operation - Success

`ESP_BLE_MESH_SCENE_REG_FULL`
Scene operation - Scene Register Full

`ESP_BLE_MESH_SCENE_NOT_FOUND`
Scene operation - Scene Not Found

Type Definitions

`typedef` void (*`esp_ble_mesh_time_scene_client_cb_t`)(*esp_ble_mesh_time_scene_client_cb_event_t* event, *esp_ble_mesh_time_scene_client_cb_param_t* *param)

Bluetooth Mesh Time Scene Client Model function.

Time Scene Client Model callback function type

Parameters

- `event`: Event type
- `param`: Pointer to callback parameter

`typedef` void (*`esp_ble_mesh_time_scene_server_cb_t`)(*esp_ble_mesh_time_scene_server_cb_event_t* event, *esp_ble_mesh_time_scene_server_cb_param_t* *param)

Bluetooth Mesh Time and Scenes Server Model function.

Time Scene Server Model callback function type

Parameters

- `event`: Event type
- `param`: Pointer to callback parameter

Enumerations

`enum esp_ble_mesh_time_scene_client_cb_event_t`

This enum value is the event of Time Scene Client Model

Values:

`ESP_BLE_MESH_TIME_SCENE_CLIENT_GET_STATE_EVT`

`ESP_BLE_MESH_TIME_SCENE_CLIENT_SET_STATE_EVT`

`ESP_BLE_MESH_TIME_SCENE_CLIENT_PUBLISH_EVT`

`ESP_BLE_MESH_TIME_SCENE_CLIENT_TIMEOUT_EVT`

`ESP_BLE_MESH_TIME_SCENE_CLIENT_EVT_MAX`

enum esp_ble_mesh_time_scene_server_cb_event_t

This enum value is the event of Time Scene Server Model

Values:

ESP_BLE_MESH_TIME_SCENE_SERVER_STATE_CHANGE_EVT

1. When get_auto_rsp is set to ESP_BLE_MESH_SERVER_AUTO_RSP, no event will be callback to the application layer when Time Scene Get messages are received.
2. When set_auto_rsp is set to ESP_BLE_MESH_SERVER_AUTO_RSP, this event will be callback to the application layer when Time Scene Set/Set Unack messages are received.

ESP_BLE_MESH_TIME_SCENE_SERVER_RECV_GET_MSG_EVT

When get_auto_rsp is set to ESP_BLE_MESH_SERVER_RSP_BY_APP, this event will be callback to the application layer when Time Scene Get messages are received.

ESP_BLE_MESH_TIME_SCENE_SERVER_RECV_SET_MSG_EVT

When set_auto_rsp is set to ESP_BLE_MESH_SERVER_RSP_BY_APP, this event will be callback to the application layer when Time Scene Set/Set Unack messages are received.

ESP_BLE_MESH_TIME_SCENE_SERVER_RECV_STATUS_MSG_EVT

When status_auto_rsp is set to ESP_BLE_MESH_SERVER_RSP_BY_APP, this event will be callback to the application layer when TIme Status message is received.

ESP_BLE_MESH_TIME_SCENE_SERVER_EVT_MAX

ESP-IDF currently supports two host stacks. The Bluedroid based stack (default) supports classic Bluetooth as well as BLE. On the other hand, Apache NimBLE based stack is BLE only. For users to make a * For usecases involving classic Bluetooth as well as BLE, Bluedroid should be used. * For BLE-only usecases, using NimBLE is recommended. It is less demanding in terms of code footprint and runtime memory, making it suitable for such scenarios.

To see the overview of the ESP32 Bluetooth stack architecture, follow links below:

- ESP32 Bluetooth Architecture (PDF) [English]
- ESP32 Bluetooth Architecture (PDF) [中文]

Example code for this API section is provided in bluetooth directory of ESP-IDF examples.

Several examples contain detailed description. To see them please follow links below:

- GATT Client Example Walkthrough
- GATT Server Service Table Example Walkthrough
- GATT Server Example Walkthrough
- GATT Security Client Example Walkthrough
- GATT Security Server Example Walkthrough
- GATT Client Multi-connection Example Walkthrough

3.2 Networking APIs

3.2.1 Wi-Fi

Wi-Fi

Introduction

The WiFi libraries provide support for configuring and monitoring the ESP32 WiFi networking functionality. This includes configuration for:

- Station mode (aka STA mode or WiFi client mode). ESP32 connects to an access point.
- AP mode (aka Soft-AP mode or Access Point mode). Stations connect to the ESP32.
- Combined AP-STA mode (ESP32 is concurrently an access point and a station connected to another access point).
- Various security modes for the above (WPA, WPA2, WEP, etc.)
- Scanning for access points (active & passive scanning).
- Promiscuous mode monitoring of IEEE802.11 WiFi packets.

Application Examples

See wifi directory of ESP-IDF examples that contains the following applications:

- Simple application showing how to connect ESP32 module to an Access Point - esp-idf-template.
- Using power save mode of Wi-Fi - wifi/power_save.

API Reference

Header File

- esp32/include/esp_wifi.h

Functions

esp_err_t **esp_wifi_init**(**const** *wifi_init_config_t* **config*)

Init WiFi Alloc resource for WiFi driver, such as WiFi control structure, RX/TX buffer, WiFi NVS structure etc, this WiFi also start WiFi task.

Attention 1. This API must be called before all other WiFi API can be called

Attention 2. Always use WIFI_INIT_CONFIG_DEFAULT macro to init the config to default values, this can guarantee all the fields got correct value when more fields are added into *wifi_init_config_t* in future release. If you want to set your owner initial values, overwrite the default values which are set by WIFI_INIT_CONFIG_DEFAULT, please be notified that the field 'magic' of *wifi_init_config_t* should always be WIFI_INIT_CONFIG_MAGIC!

Return

- ESP_OK: succeed
- ESP_ERR_NO_MEM: out of memory
- others: refer to error code esp_err.h

Parameters

- `config`: pointer to WiFi init configuration structure; can point to a temporary variable.

esp_err_t **esp_wifi_deinit**(void)

Deinit WiFi Free all resource allocated in esp_wifi_init and stop WiFi task.

Attention 1. This API should be called if you want to remove WiFi driver from the system

Return

- ESP_OK: succeed
- ESP_ERR_WIFI_NOT_INIT: WiFi is not initialized by esp_wifi_init

esp_err_t **esp_wifi_set_mode**(*wifi_mode_t mode*)

Set the WiFi operating mode.

Set the WiFi operating mode as station, soft-AP or station+soft-AP, The default mode is soft-AP mode.

Return

- ESP_OK: succeed
- ESP_ERR_WIFI_NOT_INIT: WiFi is not initialized by esp_wifi_init
- ESP_ERR_INVALID_ARG: invalid argument
- others: refer to error code in esp_err.h

Parameters

- `mode`: WiFi operating mode

esp_err_t **esp_wifi_get_mode**(*wifi_mode_t *mode*)

Get current operating mode of WiFi.

Return

- ESP_OK: succeed
- ESP_ERR_WIFI_NOT_INIT: WiFi is not initialized by esp_wifi_init
- ESP_ERR_INVALID_ARG: invalid argument

Parameters

- `mode`: store current WiFi mode

esp_err_t **esp_wifi_start**(void)

Start WiFi according to current configuration If mode is WIFI_MODE_STA, it create station control block and start station If mode is WIFI_MODE_AP, it create soft-AP control block and start soft-AP If mode is WIFI_MODE_APSTA, it create soft-AP and station control block and start soft-AP and station.

Return

- ESP_OK: succeed
- ESP_ERR_WIFI_NOT_INIT: WiFi is not initialized by esp_wifi_init
- ESP_ERR_INVALID_ARG: invalid argument
- ESP_ERR_NO_MEM: out of memory
- ESP_ERR_WIFI_CONN: WiFi internal error, station or soft-AP control block wrong
- ESP_FAIL: other WiFi internal errors

esp_err_t **esp_wifi_stop**(void)

Stop WiFi If mode is WIFI_MODE_STA, it stop station and free station control block If mode is WIFI_MODE_AP, it stop soft-AP and free soft-AP control block If mode is WIFI_MODE_APSTA, it stop station/soft-AP and free station/soft-AP control block.

Return

- ESP_OK: succeed
- ESP_ERR_WIFI_NOT_INIT: WiFi is not initialized by esp_wifi_init

esp_err_t **esp_wifi_restore**(void)

Restore WiFi stack persistent settings to default values.

This function will reset settings made using the following APIs:

- esp_wifi_set_bandwidth,
- esp_wifi_set_protocol,
- esp_wifi_set_config related
- esp_wifi_set_mode

Return

- ESP_OK: succeed
- ESP_ERR_WIFI_NOT_INIT: WiFi is not initialized by esp_wifi_init

esp_err_t **esp_wifi_connect**(void)

Connect the ESP32 WiFi station to the AP.

Attention 1. This API only impact WIFI_MODE_STA or WIFI_MODE_APSTA mode

Attention 2. If the ESP32 is connected to an AP, call esp_wifi_disconnect to disconnect.

Attention 3. The scanning triggered by esp_wifi_start_scan() will not be effective until connection between ESP32 and the AP is established. If ESP32 is scanning and connecting at the same time, ESP32 will abort scanning and return a warning message and error number ESP_ERR_WIFI_STATE. If you want to do reconnection after ESP32 received disconnect event, remember to add the maximum retry time, otherwise the called scan will not work. This is especially true when the AP doesn' t exist, and you still try reconnection after ESP32 received disconnect event with the reason code WIFI_REASON_NO_AP_FOUND.

Return

- ESP_OK: succeed
- ESP_ERR_WIFI_NOT_INIT: WiFi is not initialized by esp_wifi_init
- ESP_ERR_WIFI_NOT_START: WiFi is not started by esp_wifi_start
- ESP_ERR_WIFI_CONN: WiFi internal error, station or soft-AP control block wrong
- ESP_ERR_WIFI_SSID: SSID of AP which station connects is invalid

esp_err_t **esp_wifi_disconnect**(void)

Disconnect the ESP32 WiFi station from the AP.

Return

- ESP_OK: succeed
- ESP_ERR_WIFI_NOT_INIT: WiFi was not initialized by esp_wifi_init
- ESP_ERR_WIFI_NOT_STARTED: WiFi was not started by esp_wifi_start
- ESP_FAIL: other WiFi internal errors

esp_err_t **esp_wifi_clear_fast_connect**(void)

Currently this API is just an stub API.

Return

- ESP_OK: succeed

- others: fail

esp_err_t **esp_wifi_deauth_sta**(uint16_t *aid*)

deauthenticate all stations or associated id equals to aid

Return

- ESP_OK: succeed
- ESP_ERR_WIFI_NOT_INIT: WiFi is not initialized by esp_wifi_init
- ESP_ERR_WIFI_NOT_STARTED: WiFi was not started by esp_wifi_start
- ESP_ERR_INVALID_ARG: invalid argument
- ESP_ERR_WIFI_MODE: WiFi mode is wrong

Parameters

- `aid`: when aid is 0, deauthenticate all stations, otherwise deauthenticate station whose associated id is aid

esp_err_t **esp_wifi_scan_start**(**const** *wifi_scan_config_t* **config*, bool *block*)

Scan all available APs.

Attention If this API is called, the found APs are stored in WiFi driver dynamic allocated memory and the will be freed in esp_wifi_scan_get_ap_records, so generally, call esp_wifi_scan_get_ap_records to cause the memory to be freed once the scan is done

Attention The values of maximum active scan time and passive scan time per channel are limited to 1500 milliseconds. Values above 1500ms may cause station to disconnect from AP and are not recommended.

Return

- ESP_OK: succeed
- ESP_ERR_WIFI_NOT_INIT: WiFi is not initialized by esp_wifi_init
- ESP_ERR_WIFI_NOT_STARTED: WiFi was not started by esp_wifi_start
- ESP_ERR_WIFI_TIMEOUT: blocking scan is timeout
- ESP_ERR_WIFI_STATE: wifi still connecting when invoke esp_wifi_scan_start
- others: refer to error code in esp_err.h

Parameters

- `config`: configuration of scanning
- `block`: if block is true, this API will block the caller until the scan is done, otherwise it will return immediately

esp_err_t **esp_wifi_scan_stop**(void)

Stop the scan in process.

Return

- ESP_OK: succeed
- ESP_ERR_WIFI_NOT_INIT: WiFi is not initialized by esp_wifi_init
- ESP_ERR_WIFI_NOT_STARTED: WiFi is not started by esp_wifi_start

esp_err_t **esp_wifi_scan_get_ap_num**(uint16_t **number*)

Get number of APs found in last scan.

Attention This API can only be called when the scan is completed, otherwise it may get wrong value.

Return

- ESP_OK: succeed
- ESP_ERR_WIFI_NOT_INIT: WiFi is not initialized by esp_wifi_init
- ESP_ERR_WIFI_NOT_STARTED: WiFi is not started by esp_wifi_start
- ESP_ERR_INVALID_ARG: invalid argument

Parameters

- `number`: store number of APIs found in last scan

esp_err_t **esp_wifi_scan_get_ap_records**(uint16_t **number*, *wifi_ap_record_t* **ap_records*)

Get AP list found in last scan.

Return

- ESP_OK: succeed
- ESP_ERR_WIFI_NOT_INIT: WiFi is not initialized by esp_wifi_init
- ESP_ERR_WIFI_NOT_STARTED: WiFi is not started by esp_wifi_start
- ESP_ERR_INVALID_ARG: invalid argument
- ESP_ERR_NO_MEM: out of memory

Parameters

- `number`: As input param, it stores max AP number ap_records can hold. As output param, it receives the actual AP number this API returns.
- `ap_records`: *wifi_ap_record_t* array to hold the found APs

esp_err_t **esp_wifi_sta_get_ap_info**(*wifi_ap_record_t* **ap_info*)

Get information of AP which the ESP32 station is associated with.

Attention When the obtained country information is empty, it means that the AP does not carry country information

Return

- ESP_OK: succeed
- ESP_ERR_WIFI_CONN: The station interface don't initialized
- ESP_ERR_WIFI_NOT_CONNECT: The station is in disconnect status

Parameters

- `ap_info`: the *wifi_ap_record_t* to hold AP information sta can get the connected ap's phy mode info through the struct member phy_11b, phy_11g, phy_11n, phy_lr in the *wifi_ap_record_t* struct. For example, phy_11b = 1 imply that ap support 802.11b mode

esp_err_t **esp_wifi_set_ps**(*wifi_ps_type_t type*)

Set current WiFi power save type.

Attention Default power save type is WIFI_PS_MIN_MODEM.

Return ESP_OK: succeed

Parameters

- `type`: power save type

esp_err_t **esp_wifi_get_ps**(*wifi_ps_type_t *type*)

Get current WiFi power save type.

Attention Default power save type is WIFI_PS_MIN_MODEM.

Return ESP_OK: succeed

Parameters

- `type`: store current power save type

esp_err_t **esp_wifi_set_protocol**(*wifi_interface_t ifx*, uint8_t *protocol_bitmap*)

Set protocol type of specified interface The default protocol is (WIFI_PROTOCOL_11B|WIFI_PROTOCOL_11G|WIFI_PROTOCOL_11N)

Attention Currently we only support 802.11b or 802.11bg or 802.11bgn mode

Return

- ESP_OK: succeed
- ESP_ERR_WIFI_NOT_INIT: WiFi is not initialized by esp_wifi_init
- ESP_ERR_WIFI_IF: invalid interface

- others: refer to error codes in esp_err.h

Parameters

- `ifx`: interfaces
- `protocol_bitmap`: WiFi protocol bitmap

esp_err_t **esp_wifi_get_protocol**(*wifi_interface_t ifx*, uint8_t **protocol_bitmap*)

Get the current protocol bitmap of the specified interface.

Return

- ESP_OK: succeed
- ESP_ERR_WIFI_NOT_INIT: WiFi is not initialized by esp_wifi_init
- ESP_ERR_WIFI_IF: invalid interface
- ESP_ERR_INVALID_ARG: invalid argument
- others: refer to error codes in esp_err.h

Parameters

- `ifx`: interface
- `protocol_bitmap`: store current WiFi protocol bitmap of interface ifx

esp_err_t **esp_wifi_set_bandwidth**(*wifi_interface_t ifx*, *wifi_bandwidth_t bw*)

Set the bandwidth of ESP32 specified interface.

Attention 1. API return false if try to configure an interface that is not enabled

Attention 2. WIFI_BW_HT40 is supported only when the interface support 11N

Return

- ESP_OK: succeed
- ESP_ERR_WIFI_NOT_INIT: WiFi is not initialized by esp_wifi_init
- ESP_ERR_WIFI_IF: invalid interface
- ESP_ERR_INVALID_ARG: invalid argument
- others: refer to error codes in esp_err.h

Parameters

- `ifx`: interface to be configured
- `bw`: bandwidth

esp_err_t **esp_wifi_get_bandwidth**(*wifi_interface_t ifx*, *wifi_bandwidth_t *bw*)

Get the bandwidth of ESP32 specified interface.

Attention 1. API return false if try to get a interface that is not enable

Return

- ESP_OK: succeed
- ESP_ERR_WIFI_NOT_INIT: WiFi is not initialized by esp_wifi_init
- ESP_ERR_WIFI_IF: invalid interface
- ESP_ERR_INVALID_ARG: invalid argument

Parameters

- `ifx`: interface to be configured
- `bw`: store bandwidth of interface ifx

esp_err_t **esp_wifi_set_channel**(uint8_t *primary*, *wifi_second_chan_t* *second*)

Set primary/secondary channel of ESP32.

Attention 1. This API should be called after esp_wifi_start()

Attention 2. When ESP32 is in STA mode, this API should not be called when STA is scanning or connecting to an external AP

Attention 3. When ESP32 is in softAP mode, this API should not be called when softAP has connected to external STAs

Attention 4. When ESP32 is in STA+softAP mode, this API should not be called when in the scenarios described above

Return

- ESP_OK: succeed
- ESP_ERR_WIFI_NOT_INIT: WiFi is not initialized by esp_wifi_init
- ESP_ERR_WIFI_IF: invalid interface
- ESP_ERR_INVALID_ARG: invalid argument

Parameters

- `primary`: for HT20, primary is the channel number, for HT40, primary is the primary channel
- `second`: for HT20, second is ignored, for HT40, second is the second channel

esp_err_t **esp_wifi_get_channel**(uint8_t **primary*, *wifi_second_chan_t* **second*)

Get the primary/secondary channel of ESP32.

Attention 1. API return false if try to get a interface that is not enable

Return

- ESP_OK: succeed
- ESP_ERR_WIFI_NOT_INIT: WiFi is not initialized by esp_wifi_init
- ESP_ERR_INVALID_ARG: invalid argument

Parameters

- `primary`: store current primary channel
- `second`: store current second channel

esp_err_t **esp_wifi_set_country**(**const** *wifi_country_t* **country*)

configure country info

Attention 1. The default country is {.cc=" CN" , .schan=1, .nchan=13, policy=WIFI_COUNTRY_POLICY_AUTO}

Attention 2. When the country policy is WIFI_COUNTRY_POLICY_AUTO, the country info of the AP to which the station is connected is used. E.g. if the configured country info is {.cc=" USA" , .schan=1, .nchan=11} and the country info of the AP to which the station is connected is {.cc=" JP" , .schan=1, .nchan=14} then the country info that will be used is {.cc=" JP" , .schan=1, .nchan=14}. If the station disconnected from the AP the country info is set back back to the country info of the station automatically, {.cc=" US" , .schan=1, .nchan=11} in the example.

Attention 3. When the country policy is WIFI_COUNTRY_POLICY_MANUAL, always use the configured country info.

Attention 4. When the country info is changed because of configuration or because the station connects to a different external AP, the country IE in probe response/beacon of the soft-AP is changed also.

Attention 5. The country configuration is not stored into flash

Attention 6. This API doesn' t validate the per-country rules, it' s up to the user to fill in all fields according to local regulations.

Return

- ESP_OK: succeed
- ESP_ERR_WIFI_NOT_INIT: WiFi is not initialized by esp_wifi_init
- ESP_ERR_INVALID_ARG: invalid argument

Parameters

- `country`: the configured country info

esp_err_t **esp_wifi_get_country**(*wifi_country_t* **country*)

get the current country info

Return

- ESP_OK: succeed
- ESP_ERR_WIFI_NOT_INIT: WiFi is not initialized by esp_wifi_init
- ESP_ERR_INVALID_ARG: invalid argument

Parameters

- `country`: country info

esp_err_t **esp_wifi_set_mac**(*wifi_interface_t ifx*, **const** uint8_t *mac*[6])

Set MAC address of the ESP32 WiFi station or the soft-AP interface.

Attention 1. This API can only be called when the interface is disabled

Attention 2. ESP32 soft-AP and station have different MAC addresses, do not set them to be the same.

Attention 3. The bit 0 of the first byte of ESP32 MAC address can not be 1. For example, the MAC address can set to be "1a:XX:XX:XX:XX:XX" , but can not be "15:XX:XX:XX:XX:XX" .

Return

- ESP_OK: succeed
- ESP_ERR_WIFI_NOT_INIT: WiFi is not initialized by esp_wifi_init
- ESP_ERR_INVALID_ARG: invalid argument
- ESP_ERR_WIFI_IF: invalid interface
- ESP_ERR_WIFI_MAC: invalid mac address
- ESP_ERR_WIFI_MODE: WiFi mode is wrong
- others: refer to error codes in esp_err.h

Parameters

- `ifx`: interface
- `mac`: the MAC address

esp_err_t **esp_wifi_get_mac**(*wifi_interface_t ifx*, uint8_t *mac*[6])

Get mac of specified interface.

Return

- ESP_OK: succeed
- ESP_ERR_WIFI_NOT_INIT: WiFi is not initialized by esp_wifi_init
- ESP_ERR_INVALID_ARG: invalid argument

- ESP_ERR_WIFI_IF: invalid interface

Parameters

- `ifx`: interface
- `mac`: store mac of the interface ifx

esp_err_t **esp_wifi_set_promiscuous_rx_cb**(*wifi_promiscuous_cb_t cb*)

Register the RX callback function in the promiscuous mode.

Each time a packet is received, the registered callback function will be called.

Return

- ESP_OK: succeed
- ESP_ERR_WIFI_NOT_INIT: WiFi is not initialized by esp_wifi_init

Parameters

- `cb`: callback

esp_err_t **esp_wifi_set_promiscuous**(bool *en*)

Enable the promiscuous mode.

Return

- ESP_OK: succeed
- ESP_ERR_WIFI_NOT_INIT: WiFi is not initialized by esp_wifi_init

Parameters

- `en`: false - disable, true - enable

esp_err_t **esp_wifi_get_promiscuous**(bool **en*)

Get the promiscuous mode.

Return

- ESP_OK: succeed
- ESP_ERR_WIFI_NOT_INIT: WiFi is not initialized by esp_wifi_init
- ESP_ERR_INVALID_ARG: invalid argument

Parameters

- `en`: store the current status of promiscuous mode

esp_err_t **esp_wifi_set_promiscuous_filter**(**const** *wifi_promiscuous_filter_t *filter*)

Enable the promiscuous mode packet type filter.

Note The default filter is to filter all packets except WIFI_PKT_MISC

Return

- ESP_OK: succeed
- ESP_ERR_WIFI_NOT_INIT: WiFi is not initialized by esp_wifi_init

Parameters

- `filter`: the packet type filtered in promiscuous mode.

esp_err_t **esp_wifi_get_promiscuous_filter**(*wifi_promiscuous_filter_t* **filter*)

Get the promiscuous filter.

Return

- ESP_OK: succeed
- ESP_ERR_WIFI_NOT_INIT: WiFi is not initialized by esp_wifi_init
- ESP_ERR_INVALID_ARG: invalid argument

Parameters

- `filter`: store the current status of promiscuous filter

esp_err_t **esp_wifi_set_promiscuous_ctrl_filter**(**const** *wifi_promiscuous_filter_t* **filter*)

Enable subtype filter of the control packet in promiscuous mode.

Note The default filter is to filter none control packet.

Return

- ESP_OK: succeed
- ESP_ERR_WIFI_NOT_INIT: WiFi is not initialized by esp_wifi_init

Parameters

- `filter`: the subtype of the control packet filtered in promiscuous mode.

esp_err_t **esp_wifi_get_promiscuous_ctrl_filter**(*wifi_promiscuous_filter_t* **filter*)

Get the subtype filter of the control packet in promiscuous mode.

Return

- ESP_OK: succeed
- ESP_ERR_WIFI_NOT_INIT: WiFi is not initialized by esp_wifi_init
- ESP_ERR_WIFI_ARG: invalid argument

Parameters

- `filter`: store the current status of subtype filter of the control packet in promiscuous mode

esp_err_t **esp_wifi_set_config**(*wifi_interface_t interface*, *wifi_config_t* **conf*)

Set the configuration of the ESP32 STA or AP.

Attention 1. This API can be called only when specified interface is enabled, otherwise, API fail

Attention 2. For station configuration, bssid_set needs to be 0; and it needs to be 1 only when users need to check the MAC address of the AP.

Attention 3. ESP32 is limited to only one channel, so when in the soft-AP+station mode, the soft-AP will adjust its channel automatically to be the same as the channel of the ESP32 station.

Return

- ESP_OK: succeed
- ESP_ERR_WIFI_NOT_INIT: WiFi is not initialized by esp_wifi_init
- ESP_ERR_INVALID_ARG: invalid argument
- ESP_ERR_WIFI_IF: invalid interface
- ESP_ERR_WIFI_MODE: invalid mode
- ESP_ERR_WIFI_PASSWORD: invalid password
- ESP_ERR_WIFI_NVS: WiFi internal NVS error
- others: refer to the erro code in esp_err.h

Parameters

- `interface`: interface
- `conf`: station or soft-AP configuration

esp_err_t **esp_wifi_get_config**(*wifi_interface_t interface*, *wifi_config_t* **conf*)

Get configuration of specified interface.

Return

- ESP_OK: succeed
- ESP_ERR_WIFI_NOT_INIT: WiFi is not initialized by esp_wifi_init
- ESP_ERR_INVALID_ARG: invalid argument
- ESP_ERR_WIFI_IF: invalid interface

Parameters

- `interface`: interface
- `conf`: station or soft-AP configuration

esp_err_t **esp_wifi_ap_get_sta_list**(*wifi_sta_list_t* **sta*)

Get STAs associated with soft-AP.

Attention SSC only API

Return

- ESP_OK: succeed
- ESP_ERR_WIFI_NOT_INIT: WiFi is not initialized by esp_wifi_init
- ESP_ERR_INVALID_ARG: invalid argument
- ESP_ERR_WIFI_MODE: WiFi mode is wrong
- ESP_ERR_WIFI_CONN: WiFi internal error, the station/soft-AP control block is invalid

Parameters

- `sta`: station list ap can get the connected sta' s phy mode info through the struct member phy_11b, phy_11g, phy_11n, phy_lr in the *wifi_sta_info_t* struct. For example, phy_11b = 1 imply that sta support 802.11b mode

esp_err_t **esp_wifi_ap_get_sta_aid**(**const** uint8_t *mac*[6], uint16_t **aid*)

Get AID of STA connected with soft-AP.

Return

- ESP_OK: succeed
- ESP_ERR_WIFI_NOT_INIT: WiFi is not initialized by esp_wifi_init
- ESP_ERR_INVALID_ARG: invalid argument
- ESP_ERR_NOT_FOUND: Requested resource not found
- ESP_ERR_WIFI_MODE: WiFi mode is wrong
- ESP_ERR_WIFI_CONN: WiFi internal error, the station/soft-AP control block is invalid

Parameters

- `mac`: STA' s mac address
- `aid`: Store the AID corresponding to STA mac

esp_err_t **esp_wifi_set_storage**(*wifi_storage_t storage*)

Set the WiFi API configuration storage type.

Attention 1. The default value is WIFI_STORAGE_FLASH

Return

- ESP_OK: succeed

- ESP_ERR_WIFI_NOT_INIT: WiFi is not initialized by esp_wifi_init
- ESP_ERR_INVALID_ARG: invalid argument

Parameters

- `storage`: : storage type

esp_err_t **esp_wifi_set_auto_connect**(bool *en*)

Set auto connect The default value is true.

Return

- ESP_OK: succeed
- ESP_ERR_WIFI_NOT_INIT: WiFi is not initialized by esp_wifi_init
- ESP_ERR_WIFI_MODE: WiFi internal error, the station/soft-AP control block is invalid
- others: refer to error code in esp_err.h

Parameters

- `en`: : true - enable auto connect / false - disable auto connect

esp_err_t **esp_wifi_get_auto_connect**(bool **en*)

Get the auto connect flag.

Return

- ESP_OK: succeed
- ESP_ERR_WIFI_NOT_INIT: WiFi is not initialized by esp_wifi_init
- ESP_ERR_INVALID_ARG: invalid argument

Parameters

- `en`: store current auto connect configuration

esp_err_t **esp_wifi_set_vendor_ie**(bool *enable*, *wifi_vendor_ie_type_t type*, *wifi_vendor_ie_id_t idx*, `const` void **vnd_ie*)

Set 802.11 Vendor-Specific Information Element.

Return

- ESP_OK: succeed
- ESP_ERR_WIFI_NOT_INIT: WiFi is not initialized by esp_wifi_init()
- ESP_ERR_INVALID_ARG: Invalid argument, including if first byte of vnd_ie is not WIFI_VENDOR_IE_ELEMENT_ID (0xDD) or second byte is an invalid length.
- ESP_ERR_NO_MEM: Out of memory

Parameters

- `enable`: If true, specified IE is enabled. If false, specified IE is removed.
- `type`: Information Element type. Determines the frame type to associate with the IE.
- `idx`: Index to set or clear. Each IE type can be associated with up to two elements (indices 0 & 1).
- `vnd_ie`: Pointer to vendor specific element data. First 6 bytes should be a header with fields matching *vendor_ie_data_t*. If enable is false, this argument is ignored and can be NULL. Data does not need to remain valid after the function returns.

esp_err_t **esp_wifi_set_vendor_ie_cb**(*esp_vendor_ie_cb_t cb*, void **ctx*)

Register Vendor-Specific Information Element monitoring callback.

Return

- ESP_OK: succeed
- ESP_ERR_WIFI_NOT_INIT: WiFi is not initialized by esp_wifi_init

Parameters

- `cb`: Callback function
- `ctx`: Context argument, passed to callback function.

esp_err_t **esp_wifi_set_max_tx_power**(int8_t *power*)

Set maximum transmitting power after WiFi start.

Attention 1. Maximum power before wifi startup is limited by PHY init data bin.

Attention 2. The value set by this API will be mapped to the max_tx_power of the structure *wifi_country_t* variable.

Attention 3. Mapping Table {Power, max_tx_power} = {{8, 2}, {20, 5}, {28, 7}, {34, 8}, {44, 11}, {52, 13}, {56, 14}, {60, 15}, {66, 16}, {72, 18}, {80, 20}}.

Attention 4. Param power unit is 0.25dBm, range is [8, 84] corresponding to 2dBm - 20dBm.

Attention 5. Relationship between set value and actual value. As follows: {set value range, actual value} = {{[8, 19],8}, {[20, 27],20}, {[28, 33],28}, {[34, 43],34}, {[44, 51],44}, {[52, 55],52}, {[56, 59],56}, {[60, 65],60}, {[66, 71],66}, {[72, 79],72}, {[80, 84],80}}.

Return

- ESP_OK: succeed
- ESP_ERR_WIFI_NOT_INIT: WiFi is not initialized by esp_wifi_init
- ESP_ERR_WIFI_NOT_START: WiFi is not started by esp_wifi_start
- ESP_ERR_WIFI_ARG: invalid argument, e.g. parameter is out of range

Parameters

- `power`: Maximum WiFi transmitting power.

esp_err_t **esp_wifi_get_max_tx_power**(int8_t *power)

Get maximum transmiting power after WiFi start.

Return

- ESP_OK: succeed
- ESP_ERR_WIFI_NOT_INIT: WiFi is not initialized by esp_wifi_init
- ESP_ERR_WIFI_NOT_START: WiFi is not started by esp_wifi_start
- ESP_ERR_WIFI_ARG: invalid argument

Parameters

- `power`: Maximum WiFi transmitting power, unit is 0.25dBm.

esp_err_t **esp_wifi_set_event_mask**(uint32_t *mask*)

Set mask to enable or disable some WiFi events.

Attention 1. Mask can be created by logical OR of various WIFI_EVENT_MASK_ constants. Events which have corresponding bit set in the mask will not be delivered to the system event handler.

Attention 2. Default WiFi event mask is WIFI_EVENT_MASK_AP_PROBEREQRECVED.

Attention 3. There may be lots of stations sending probe request data around. Don't unmask this event unless you need to receive probe request data.

Return

- ESP_OK: succeed
- ESP_ERR_WIFI_NOT_INIT: WiFi is not initialized by esp_wifi_init

Parameters

- `mask`: WiFi event mask.

esp_err_t **esp_wifi_get_event_mask**(uint32_t *mask)

Get mask of WiFi events.

Return

- ESP_OK: succeed
- ESP_ERR_WIFI_NOT_INIT: WiFi is not initialized by esp_wifi_init
- ESP_ERR_WIFI_ARG: invalid argument

Parameters

- `mask`: WiFi event mask.

esp_err_t **esp_wifi_80211_tx**(*wifi_interface_t ifx*, **const** void **buffer*, int *len*, bool *en_sys_seq*)

Send raw ieee80211 data.

Attention Currently only support for sending beacon/probe request/probe response/action and non-QoS data frame

Return

- ESP_OK: success
- ESP_ERR_WIFI_IF: Invalid interface
- ESP_ERR_INVALID_ARG: Invalid parameter
- ESP_ERR_WIFI_NO_MEM: out of memory

Parameters

- `ifx`: interface if the Wi-Fi mode is Station, the ifx should be WIFI_IF_STA. If the Wi-Fi mode is SoftAP, the ifx should be WIFI_IF_AP. If the Wi-Fi mode is Station+SoftAP, the ifx should be WIFI_IF_STA or WIFI_IF_AP. If the ifx is wrong, the API returns ESP_ERR_WIFI_IF.
- `buffer`: raw ieee80211 buffer
- `len`: the length of raw buffer, the len must be <= 1500 Bytes and >= 24 Bytes
- `en_sys_seq`: indicate whether use the internal sequence number. If en_sys_seq is false, the sequence in raw buffer is unchanged, otherwise it will be overwritten by WiFi driver with the system sequence number. Generally, if esp_wifi_80211_tx is called before the Wi-Fi connection has been set up, both en_sys_seq==true and en_sys_seq==false are fine. However, if the API is called after the Wi-Fi connection has been set up, en_sys_seq must be true, otherwise ESP_ERR_WIFI_ARG is returned.

esp_err_t **esp_wifi_set_csi_rx_cb**(*wifi_csi_cb_t cb*, void **ctx*)

Register the RX callback function of CSI data.

Each time a CSI data is received, the callback function will be called.

Return

- ESP_OK: succeed
- ESP_ERR_WIFI_NOT_INIT: WiFi is not initialized by esp_wifi_init

Parameters

- `cb`: callback

- `ctx`: context argument, passed to callback function

esp_err_t **esp_wifi_set_csi_config**(const *wifi_csi_config_t* **config*)

Set CSI data configuration.

return

- ESP_OK: succeed
- ESP_ERR_WIFI_NOT_INIT: WiFi is not initialized by esp_wifi_init
- ESP_ERR_WIFI_NOT_START: WiFi is not started by esp_wifi_start or promiscuous mode is not enabled
- ESP_ERR_INVALID_ARG: invalid argument

Parameters

- `config`: configuration

esp_err_t **esp_wifi_set_csi**(bool *en*)

Enable or disable CSI.

return

- ESP_OK: succeed
- ESP_ERR_WIFI_NOT_INIT: WiFi is not initialized by esp_wifi_init
- ESP_ERR_WIFI_NOT_START: WiFi is not started by esp_wifi_start or promiscuous mode is not enabled
- ESP_ERR_INVALID_ARG: invalid argument

Parameters

- `en`: true - enable, false - disable

esp_err_t **esp_wifi_set_ant_gpio**(const *wifi_ant_gpio_config_t* **config*)

Set antenna GPIO configuration.

Return

- ESP_OK: succeed
- ESP_ERR_WIFI_NOT_INIT: WiFi is not initialized by esp_wifi_init
- ESP_ERR_WIFI_ARG: Invalid argument, e.g. parameter is NULL, invalid GPIO number etc

Parameters

- `config`: Antenna GPIO configuration.

esp_err_t **esp_wifi_get_ant_gpio**(*wifi_ant_gpio_config_t* **config*)

Get current antenna GPIO configuration.

Return

- ESP_OK: succeed
- ESP_ERR_WIFI_NOT_INIT: WiFi is not initialized by esp_wifi_init
- ESP_ERR_WIFI_ARG: invalid argument, e.g. parameter is NULL

Parameters

- `config`: Antenna GPIO configuration.

esp_err_t **esp_wifi_set_ant**(**const** *wifi_ant_config_t* **config*)

Set antenna configuration.

Return

- ESP_OK: succeed
- ESP_ERR_WIFI_NOT_INIT: WiFi is not initialized by esp_wifi_init
- ESP_ERR_WIFI_ARG: Invalid argument, e.g. parameter is NULL, invalid antenna mode or invalid GPIO number

Parameters

- `config`: Antenna configuration.

esp_err_t **esp_wifi_get_ant**(*wifi_ant_config_t* **config*)

Get current antenna configuration.

Return

- ESP_OK: succeed
- ESP_ERR_WIFI_NOT_INIT: WiFi is not initialized by esp_wifi_init
- ESP_ERR_WIFI_ARG: invalid argument, e.g. parameter is NULL

Parameters

- `config`: Antenna configuration.

esp_err_t **esp_wifi_set_inactive_time**(*wifi_interface_t* *ifx*, uint16_t *sec*)

Set the inactive time of the ESP32 STA or AP.

Attention 1. For Station, If the station does not receive a beacon frame from the connected SoftAP during the inactive time, disconnect from SoftAP. Default 6s.

Attention 2. For SoftAP, If the softAP doesn’ t receive any data from the connected STA during inactive time, the softAP will force deauth the STA. Default is 300s.

Attention 3. The inactive time configuration is not stored into flash

Return

- ESP_OK: succeed
- ESP_ERR_WIFI_NOT_INIT: WiFi is not initialized by esp_wifi_init
- ESP_ERR_WIFI_NOT_STARTED: WiFi is not started by esp_wifi_start
- ESP_ERR_WIFI_ARG: invalid argument, For Station, if sec is less than 3. For SoftAP, if sec is less than 10.

Parameters

- `ifx`: interface to be configured.
- `sec`: Inactive time. Unit seconds.

esp_err_t **esp_wifi_get_inactive_time**(*wifi_interface_t ifx*, uint16_t **sec*)

Get inactive time of specified interface.

Return

- ESP_OK: succeed
- ESP_ERR_WIFI_NOT_INIT: WiFi is not initialized by esp_wifi_init
- ESP_ERR_WIFI_ARG: invalid argument

Parameters

- `ifx`: Interface to be configured.
- `sec`: Inactive time. Unit seconds.

esp_err_t **esp_wifi_statis_dump**(uint32_t *modules*)

Dump WiFi statistics.

Return

- ESP_OK: succeed
- others: failed

Parameters

- `modules`: statistic modules to be dumped

Structures

struct wifi_init_config_t

WiFi stack configuration parameters passed to esp_wifi_init call.

Public Members

system_event_handler_t **event_handler**

WiFi event handler

wifi_osi_funcs_t ***osi_funcs**

WiFi OS functions

wpa_crypto_funcs_t **wpa_crypto_funcs**

WiFi station crypto functions when connect

int **static_rx_buf_num**

WiFi static RX buffer number

int **dynamic_rx_buf_num**

WiFi dynamic RX buffer number

int **tx_buf_type**

WiFi TX buffer type

int **static_tx_buf_num**

WiFi static TX buffer number

int **dynamic_tx_buf_num**

WiFi dynamic TX buffer number

int **csi_enable**

WiFi channel state information enable flag

int **ampdu_rx_enable**

WiFi AMPDU RX feature enable flag

int **ampdu_tx_enable**

WiFi AMPDU TX feature enable flag

int **nvs_enable**

WiFi NVS flash enable flag

int **nano_enable**

Nano option for printf/scan family enable flag

int **tx_ba_win**

WiFi Block Ack TX window size

int **rx_ba_win**

WiFi Block Ack RX window size

int **wifi_task_core_id**

WiFi Task Core ID

int **beacon_max_len**

WiFi softAP maximum length of the beacon

int **mgmt_sbuf_num**

WiFi management short buffer number, the minimum value is 6, the maximum value is 32

uint64_t **feature_caps**

Enables additional WiFi features and capabilities

int **magic**

WiFi init magic number, it should be the last field

Macros

ESP_ERR_WIFI_NOT_INIT

WiFi driver was not installed by esp_wifi_init

ESP_ERR_WIFI_NOT_STARTED

WiFi driver was not started by esp_wifi_start

ESP_ERR_WIFI_NOT_STOPPED

WiFi driver was not stopped by esp_wifi_stop

ESP_ERR_WIFI_IF

WiFi interface error

ESP_ERR_WIFI_MODE

WiFi mode error

ESP_ERR_WIFI_STATE

WiFi internal state error

ESP_ERR_WIFI_CONN

WiFi internal control block of station or soft-AP error

ESP_ERR_WIFI_NVS

WiFi internal NVS module error

ESP_ERR_WIFI_MAC

MAC address is invalid

ESP_ERR_WIFI_SSID

SSID is invalid

ESP_ERR_WIFI_PASSWORD
: Password is invalid

ESP_ERR_WIFI_TIMEOUT
: Timeout error

ESP_ERR_WIFI_WAKE_FAIL
: WiFi is in sleep state(RF closed) and wakeup fail

ESP_ERR_WIFI_WOULD_BLOCK
: The caller would block

ESP_ERR_WIFI_NOT_CONNECT
: Station still in disconnect status

ESP_ERR_WIFI_POST
: Failed to post the event to WiFi task

ESP_ERR_WIFI_INIT_STATE
: Invalid WiFi state when init/deinit is called

ESP_ERR_WIFI_STOP_STATE
: Returned when WiFi is stopping

WIFI_STATIC_TX_BUFFER_NUM

WIFI_DYNAMIC_TX_BUFFER_NUM

WIFI_CSI_ENABLED

WIFI_AMPDU_RX_ENABLED

WIFI_AMPDU_TX_ENABLED

WIFI_NVS_ENABLED

WIFI_NANO_FORMAT_ENABLED

WIFI_INIT_CONFIG_MAGIC

WIFI_DEFAULT_TX_BA_WIN

WIFI_DEFAULT_RX_BA_WIN

WIFI_TASK_CORE_ID

WIFI_SOFTAP_BEACON_MAX_LEN

WIFI_MGMT_SBUF_NUM

WIFI_INIT_CONFIG_DEFAULT()

Type Definitions

`typedef` void (*`wifi_promiscuous_cb_t`)(void *buf, *wifi_promiscuous_pkt_type_t* type)

The RX callback function in the promiscuous mode. Each time a packet is received, the callback function will be called.

Parameters

- `buf`: Data received. Type of data in buffer (*wifi_promiscuous_pkt_t* or *wifi_pkt_rx_ctrl_t*) indicated by 'type' parameter.
- `type`: promiscuous packet type.

`typedef` void (*`esp_vendor_ie_cb_t`)(void *ctx, *wifi_vendor_ie_type_t* type, `const` uint8_t sa[6], `const` *vendor_ie_data_t* *vnd_ie, int rssi)

Function signature for received Vendor-Specific Information Element callback.

Parameters

- `ctx`: Context argument, as passed to esp_wifi_set_vendor_ie_cb() when registering callback.
- `type`: Information element type, based on frame type received.
- `sa`: Source 802.11 address.
- `vnd_ie`: Pointer to the vendor specific element data received.
- `rssi`: Received signal strength indication.

`typedef` void (*`wifi_csi_cb_t`)(void *ctx, *wifi_csi_info_t* *data)

The RX callback function of Channel State Information(CSI) data.

Each time a CSI data is received, the callback function will be called.

Parameters

- `ctx`: context argument, passed to esp_wifi_set_csi_rx_cb() when registering callback function.
- `data`: CSI data received. The memory that it points to will be deallocated after callback function returns.

Header File

- esp32/include/esp_wifi_types.h

Unions

union wifi_config_t

#include <esp_wifi_types.h> Configuration data for ESP32 AP or STA.

The usage of this union (for ap or sta configuration) is determined by the accompanying interface argument passed to esp_wifi_set_config() or esp_wifi_get_config()

Public Members

wifi_ap_config_t **ap**

configuration of AP

wifi_sta_config_t **sta**

configuration of STA

Structures

struct wifi_country_t

Structure describing WiFi country-based regional restrictions.

Public Members

char **cc**[3]

country code string

uint8_t **schan**

start channel

uint8_t **nchan**

total channel number

int8_t **max_tx_power**

This field is used for getting WiFi maximum transmitting power, call esp_wifi_set_max_tx_power to set the maximum transmitting power.

wifi_country_policy_t **policy**

country policy

struct wifi_active_scan_time_t

Range of active scan times per channel.

Public Members

uint32_t **min**

minimum active scan time per channel, units: millisecond

uint32_t **max**

maximum active scan time per channel, units: millisecond, values above 1500ms may cause station to disconnect from AP and are not recommended.

struct wifi_scan_time_t

Aggregate of active & passive scan time per channel.

Public Members

wifi_active_scan_time_t **active**

active scan time per channel, units: millisecond.

uint32_t **passive**

passive scan time per channel, units: millisecond, values above 1500ms may cause station to disconnect from AP and are not recommended.

struct wifi_scan_config_t

Parameters for an SSID scan.

Public Members

uint8_t ***ssid**

SSID of AP

uint8_t ***bssid**

MAC address of AP

uint8_t **channel**

channel, scan the specific channel

bool **show_hidden**

enable to scan AP whose SSID is hidden

wifi_scan_type_t **scan_type**

scan type, active or passive

wifi_scan_time_t **scan_time**

scan time per channel

struct wifi_ap_record_t

Description of a WiFi AP.

Public Members

uint8_t **bssid**[6]
MAC address of AP

uint8_t **ssid**[33]
SSID of AP

uint8_t **primary**
channel of AP

wifi_second_chan_t **second**
secondary channel of AP

int8_t **rssi**
signal strength of AP

wifi_auth_mode_t **authmode**
authmode of AP

wifi_cipher_type_t **pairwise_cipher**
pairwise cipher of AP

wifi_cipher_type_t **group_cipher**
group cipher of AP

wifi_ant_t **ant**
antenna used to receive beacon from AP

uint32_t **phy_11b**
bit: 0 flag to identify if 11b mode is enabled or not

uint32_t **phy_11g**
bit: 1 flag to identify if 11g mode is enabled or not

uint32_t **phy_11n**
bit: 2 flag to identify if 11n mode is enabled or not

uint32_t **phy_lr**
bit: 3 flag to identify if low rate is enabled or not

uint32_t **wps**
bit: 4 flag to identify if WPS is supported or not

uint32_t **reserved**
bit: 5..31 reserved

wifi_country_t **country**
country information of AP

struct wifi_fast_scan_threshold_t
Structure describing parameters for a WiFi fast scan.

Public Members

int8_t **rssi**

The minimum rssi to accept in the fast scan mode

wifi_auth_mode_t **authmode**

The weakest authmode to accept in the fast scan mode

struct wifi_ap_config_t

Soft-AP configuration settings for the ESP32.

Public Members

uint8_t **ssid**[32]

SSID of ESP32 soft-AP

uint8_t **password**[64]

Password of ESP32 soft-AP

uint8_t **ssid_len**

Length of SSID. If softap_config.ssid_len==0, check the SSID until there is a termination character; otherwise, set the SSID length according to softap_config.ssid_len.

uint8_t **channel**

Channel of ESP32 soft-AP

wifi_auth_mode_t **authmode**

Auth mode of ESP32 soft-AP. Do not support AUTH_WEP in soft-AP mode

uint8_t **ssid_hidden**

Broadcast SSID or not, default 0, broadcast the SSID

uint8_t **max_connection**

Max number of stations allowed to connect in, default 4, max 10

uint16_t **beacon_interval**

Beacon interval which should be multiples of 100. Unit: TU(time unit, 1 TU = 1024 us). Range: 100 ~ 60000. Default value: 100

struct wifi_sta_config_t

STA configuration settings for the ESP32.

Public Members

uint8_t **ssid**[32]

SSID of target AP

uint8_t **password**[64]
: password of target AP

wifi_scan_method_t **scan_method**
: do all channel scan or fast scan

bool **bssid_set**
: whether set MAC address of target AP or not. Generally, station_config.bssid_set needs to be 0; and it needs to be 1 only when users need to check the MAC address of the AP.

uint8_t **bssid**[6]
: MAC address of target AP

uint8_t **channel**
: channel of target AP. Set to 1~13 to scan starting from the specified channel before connecting to AP. If the channel of AP is unknown, set it to 0.

uint16_t **listen_interval**
: Listen interval for ESP32 station to receive beacon when WIFI_PS_MAX_MODEM is set. Units: AP beacon intervals. Defaults to 3 if set to 0.

wifi_sort_method_t **sort_method**
: sort the connect AP in the list by rssi or security mode

wifi_scan_threshold_t **threshold**
: When scan_method is set, only APs which have an auth mode that is more secure than the selected auth mode and a signal stronger than the minimum RSSI will be used.

struct wifi_sta_info_t
: Description of STA associated with AP.

Public Members

uint8_t **mac**[6]
: mac address

int8_t **rssi**
: current average rssi of sta connected

uint32_t **phy_11b**
: bit: 0 flag to identify if 11b mode is enabled or not

uint32_t **phy_11g**
: bit: 1 flag to identify if 11g mode is enabled or not

uint32_t **phy_11n**
: bit: 2 flag to identify if 11n mode is enabled or not

uint32_t **phy_lr**
: bit: 3 flag to identify if low rate is enabled or not

uint32_t **reserved**

bit: 4..31 reserved

struct wifi_sta_list_t

List of stations associated with the ESP32 Soft-AP.

Public Members

wifi_sta_info_t **sta**[**ESP_WIFI_MAX_CONN_NUM**]

station list

int **num**

number of stations in the list (other entries are invalid)

struct vendor_ie_data_t

Vendor Information Element header.

The first bytes of the Information Element will match this header. Payload follows.

Public Members

uint8_t **element_id**

Should be set to WIFI_VENDOR_IE_ELEMENT_ID (0xDD)

uint8_t **length**

Length of all bytes in the element data following this field. Minimum 4.

uint8_t **vendor_oui**[3]

Vendor identifier (OUI).

uint8_t **vendor_oui_type**

Vendor-specific OUI type.

uint8_t **payload**[0]

Payload. Length is equal to value in 'length' field, minus 4.

struct wifi_pkt_rx_ctrl_t

Received packet radio metadata header, this is the common header at the beginning of all promiscuous mode RX callback buffers.

Public Members

signed **rssi**

Received Signal Strength Indicator(RSSI) of packet. unit: dBm

unsigned **rate**

PHY rate encoding of the packet. Only valid for non HT(11bg) packet

unsigned **__pad0__**
reserve

unsigned **sig_mode**
0: non HT(11bg) packet; 1: HT(11n) packet; 3: VHT(11ac) packet

unsigned **__pad1__**
reserve

unsigned **mcs**
Modulation Coding Scheme. If is HT(11n) packet, shows the modulation, range from 0 to 76(MSC0 ~ MCS76)

unsigned **cwb**
Channel Bandwidth of the packet. 0: 20MHz; 1: 40MHz

unsigned **__pad2__**
reserve

unsigned **smoothing**
reserve

unsigned **not_sounding**
reserve

unsigned **__pad3__**
reserve

unsigned **aggregation**
Aggregation. 0: MPDU packet; 1: AMPDU packet

unsigned **stbc**
Space Time Block Code(STBC). 0: non STBC packet; 1: STBC packet

unsigned **fec_coding**
Flag is set for 11n packets which are LDPC

unsigned **sgi**
Short Guide Interval(SGI). 0: Long GI; 1: Short GI

signed **noise_floor**
noise floor of Radio Frequency Module(RF). unit: 0.25dBm

unsigned **ampdu_cnt**
ampdu cnt

unsigned **channel**
primary channel on which this packet is received

unsigned **secondary_channel**
secondary channel on which this packet is received. 0: none; 1: above; 2: below

unsigned **__pad4__**

reserve

unsigned **timestamp**

timestamp. The local time when this packet is received. It is precise only if modem sleep or light sleep is not enabled. unit: microsecond

unsigned **__pad5__**

reserve

unsigned **__pad6__**

reserve

unsigned **ant**

antenna number from which this packet is received. 0: WiFi antenna 0; 1: WiFi antenna 1

unsigned **sig_len**

length of packet including Frame Check Sequence(FCS)

unsigned **__pad7__**

reserve

unsigned **rx_state**

state of the packet. 0: no error; others: error numbers which are not public

struct wifi_promiscuous_pkt_t

Payload passed to 'buf' parameter of promiscuous mode RX callback.

Public Members

wifi_pkt_rx_ctrl_t **rx_ctrl**

metadata header

uint8_t **payload**[0]

Data or management payload. Length of payload is described by rx_ctrl.sig_len. Type of content determined by packet type argument of callback.

struct wifi_promiscuous_filter_t

Mask for filtering different packet types in promiscuous mode.

Public Members

uint32_t **filter_mask**

OR of one or more filter values WIFI_PROMIS_FILTER_*

struct wifi_csi_config_t

Channel state information(CSI) configuration type.

Public Members

bool **lltf_en**
: enable to receive legacy long training field(lltf) data. Default enabled

bool **htltf_en**
: enable to receive HT long training field(htltf) data. Default enabled

bool **stbc_htltf2_en**
: enable to receive space time block code HT long training field(stbc-htltf2) data. Default enabled

bool **ltf_merge_en**
: enable to generate htlft data by averaging lltf and ht_ltf data when receiving HT packet. Otherwise, use ht_ltf data directly. Default enabled

bool **channel_filter_en**
: enable to turn on channel filter to smooth adjacent sub-carrier. Disable it to keep independence of adjacent sub-carrier. Default enabled

bool **manu_scale**
: manually scale the CSI data by left shifting or automatically scale the CSI data. If set true, please set the shift bits. false: automatically. true: manually. Default false

uint8_t **shift**
: manually left shift bits of the scale of the CSI data. The range of the left shift bits is 0~15

struct wifi_csi_info_t
: CSI data type.

Public Members

wifi_pkt_rx_ctrl_t **rx_ctrl**
: received packet radio metadata header of the CSI data

uint8_t **mac**[6]
: source MAC address of the CSI data

bool **first_word_invalid**
: first four bytes of the CSI data is invalid or not

int8_t ***buf**
: buffer of CSI data

uint16_t **len**
: length of CSI data

struct wifi_ant_gpio_t
: WiFi GPIO configuration for antenna selection.

Public Members

uint8_t **gpio_select**

Whether this GPIO is connected to external antenna switch

uint8_t **gpio_num**

The GPIO number that connects to external antenna switch

struct wifi_ant_gpio_config_t

WiFi GPIOs configuration for antenna selection.

Public Members

wifi_ant_gpio_t **gpio_cfg**[4]

The configurations of GPIOs that connect to external antenna switch

struct wifi_ant_config_t

WiFi antenna configuration.

Public Members

wifi_ant_mode_t **rx_ant_mode**

WiFi antenna mode for receiving

wifi_ant_t **rx_ant_default**

Default antenna mode for receiving, it's ignored if rx_ant_mode is not WIFI_ANT_MODE_AUTO

wifi_ant_mode_t **tx_ant_mode**

WiFi antenna mode for transmission, it can be set to WIFI_ANT_MODE_AUTO only if rx_ant_mode is set to WIFI_ANT_MODE_AUTO

uint8_t **enabled_ant0**

Index (in antenna GPIO configuration) of enabled WIFI_ANT_MODE_ANT0

uint8_t **enabled_ant1**

Index (in antenna GPIO configuration) of enabled WIFI_ANT_MODE_ANT1

struct wifi_ht2040_coex_t

Configuration for STA's HT2040 coexist management.

Public Members

int **enable**

Indicate whether STA's HT2040 coexist management is enabled or not

`struct wifi_ioctl_config_t`

Configuration for WiFi ioctl.

Public Members

wifi_ht2040_coex_t **ht2040_coex**

Configuration of STA’ s HT2040 coexist management

union *wifi_ioctl_config_t*::[**anonymous**] **data**

Configuration of ioctl command

Macros

`WIFI_IF_STA`

`WIFI_IF_AP`

`WIFI_PS_MODEM`

`WIFI_PROTOCOL_11B`

`WIFI_PROTOCOL_11G`

`WIFI_PROTOCOL_11N`

`WIFI_PROTOCOL_LR`

`ESP_WIFI_MAX_CONN_NUM`

max number of stations which can connect to ESP32 soft-AP

`WIFI_VENDOR_IE_ELEMENT_ID`

`WIFI_PROMIS_FILTER_MASK_ALL`

filter all packets

`WIFI_PROMIS_FILTER_MASK_MGMT`

filter the packets with type of WIFI_PKT_MGMT

`WIFI_PROMIS_FILTER_MASK_CTRL`

filter the packets with type of WIFI_PKT_CTRL

`WIFI_PROMIS_FILTER_MASK_DATA`

filter the packets with type of WIFI_PKT_DATA

`WIFI_PROMIS_FILTER_MASK_MISC`

filter the packets with type of WIFI_PKT_MISC

`WIFI_PROMIS_FILTER_MASK_DATA_MPDU`

filter the MPDU which is a kind of WIFI_PKT_DATA

`WIFI_PROMIS_FILTER_MASK_DATA_AMPDU`
: filter the AMPDU which is a kind of WIFI_PKT_DATA

`WIFI_PROMIS_FILTER_MASK_FCSFAIL`
: filter the FCS failed packets, do not open it in general

`WIFI_PROMIS_CTRL_FILTER_MASK_ALL`
: filter all control packets

`WIFI_PROMIS_CTRL_FILTER_MASK_WRAPPER`
: filter the control packets with subtype of Control Wrapper

`WIFI_PROMIS_CTRL_FILTER_MASK_BAR`
: filter the control packets with subtype of Block Ack Request

`WIFI_PROMIS_CTRL_FILTER_MASK_BA`
: filter the control packets with subtype of Block Ack

`WIFI_PROMIS_CTRL_FILTER_MASK_PSPOLL`
: filter the control packets with subtype of PS-Poll

`WIFI_PROMIS_CTRL_FILTER_MASK_RTS`
: filter the control packets with subtype of RTS

`WIFI_PROMIS_CTRL_FILTER_MASK_CTS`
: filter the control packets with subtype of CTS

`WIFI_PROMIS_CTRL_FILTER_MASK_ACK`
: filter the control packets with subtype of ACK

`WIFI_PROMIS_CTRL_FILTER_MASK_CFEND`
: filter the control packets with subtype of CF-END

`WIFI_PROMIS_CTRL_FILTER_MASK_CFENDACK`
: filter the control packets with subtype of CF-END+CF-ACK

`WIFI_EVENT_MASK_ALL`
: mask all WiFi events

`WIFI_EVENT_MASK_NONE`
: mask none of the WiFi events

`WIFI_EVENT_MASK_AP_PROBEREQRECVED`
: mask SYSTEM_EVENT_AP_PROBEREQRECVED event

`WIFI_STATIS_BUFFER`

`WIFI_STATIS_RXTX`

`WIFI_STATIS_HW`

`WIFI_STATIS_DIAG`

WIFI_STATIS_ALL

Type Definitions

typedef esp_interface_t **wifi_interface_t**

typedef *wifi_fast_scan_threshold_t* **wifi_scan_threshold_t**

wifi_fast_scan_threshold_t only used in fast scan mode once, now it enabled in all channel scan, the *wifi_fast_scan_threshold_t* will be remove in version 4.0

Enumerations

enum wifi_mode_t

Values:

WIFI_MODE_NULL = 0

null mode

WIFI_MODE_STA

WiFi station mode

WIFI_MODE_AP

WiFi soft-AP mode

WIFI_MODE_APSTA

WiFi station + soft-AP mode

WIFI_MODE_MAX

enum wifi_country_policy_t

Values:

WIFI_COUNTRY_POLICY_AUTO

Country policy is auto, use the country info of AP to which the station is connected

WIFI_COUNTRY_POLICY_MANUAL

Country policy is manual, always use the configured country info

enum wifi_auth_mode_t

Values:

WIFI_AUTH_OPEN = 0

authenticate mode : open

WIFI_AUTH_WEP

authenticate mode : WEP

WIFI_AUTH_WPA_PSK

authenticate mode : WPA_PSK

WIFI_AUTH_WPA2_PSK
: authenticate mode : WPA2_PSK

WIFI_AUTH_WPA_WPA2_PSK
: authenticate mode : WPA_WPA2_PSK

WIFI_AUTH_WPA2_ENTERPRISE
: authenticate mode : WPA2_ENTERPRISE

WIFI_AUTH_MAX

enum wifi_err_reason_t

Values:

WIFI_REASON_UNSPECIFIED = 1

WIFI_REASON_AUTH_EXPIRE = 2

WIFI_REASON_AUTH_LEAVE = 3

WIFI_REASON_ASSOC_EXPIRE = 4

WIFI_REASON_ASSOC_TOOMANY = 5

WIFI_REASON_NOT_AUTHED = 6

WIFI_REASON_NOT_ASSOCED = 7

WIFI_REASON_ASSOC_LEAVE = 8

WIFI_REASON_ASSOC_NOT_AUTHED = 9

WIFI_REASON_DISASSOC_PWRCAP_BAD = 10

WIFI_REASON_DISASSOC_SUPCHAN_BAD = 11

WIFI_REASON_IE_INVALID = 13

WIFI_REASON_MIC_FAILURE = 14

WIFI_REASON_4WAY_HANDSHAKE_TIMEOUT = 15

WIFI_REASON_GROUP_KEY_UPDATE_TIMEOUT = 16

WIFI_REASON_IE_IN_4WAY_DIFFERS = 17

WIFI_REASON_GROUP_CIPHER_INVALID = 18

WIFI_REASON_PAIRWISE_CIPHER_INVALID = 19

WIFI_REASON_AKMP_INVALID = 20

WIFI_REASON_UNSUPP_RSN_IE_VERSION = 21

WIFI_REASON_INVALID_RSN_IE_CAP = 22

WIFI_REASON_802_1X_AUTH_FAILED = 23

`WIFI_REASON_CIPHER_SUITE_REJECTED` = 24

`WIFI_REASON_BEACON_TIMEOUT` = 200

`WIFI_REASON_NO_AP_FOUND` = 201

`WIFI_REASON_AUTH_FAIL` = 202

`WIFI_REASON_ASSOC_FAIL` = 203

`WIFI_REASON_HANDSHAKE_TIMEOUT` = 204

`WIFI_REASON_CONNECTION_FAIL` = 205

`WIFI_REASON_AP_TSF_RESET` = 206

enum wifi_second_chan_t

Values:

`WIFI_SECOND_CHAN_NONE` = 0

the channel width is HT20

`WIFI_SECOND_CHAN_ABOVE`

the channel width is HT40 and the secondary channel is above the primary channel

`WIFI_SECOND_CHAN_BELOW`

the channel width is HT40 and the secondary channel is below the primary channel

enum wifi_scan_type_t

Values:

`WIFI_SCAN_TYPE_ACTIVE` = 0

active scan

`WIFI_SCAN_TYPE_PASSIVE`

passive scan

enum wifi_cipher_type_t

Values:

`WIFI_CIPHER_TYPE_NONE` = 0

the cipher type is none

`WIFI_CIPHER_TYPE_WEP40`

the cipher type is WEP40

`WIFI_CIPHER_TYPE_WEP104`

the cipher type is WEP104

`WIFI_CIPHER_TYPE_TKIP`

the cipher type is TKIP

`WIFI_CIPHER_TYPE_CCMP`

the cipher type is CCMP

`WIFI_CIPHER_TYPE_TKIP_CCMP`
the cipher type is TKIP and CCMP

`WIFI_CIPHER_TYPE_UNKNOWN`
the cipher type is unknown

enum wifi_ant_t
WiFi antenna.

Values:

`WIFI_ANT_ANT0`
WiFi antenna 0

`WIFI_ANT_ANT1`
WiFi antenna 1

`WIFI_ANT_MAX`
Invalid WiFi antenna

enum wifi_scan_method_t
Values:

`WIFI_FAST_SCAN` = 0
Do fast scan, scan will end after find SSID match AP

`WIFI_ALL_CHANNEL_SCAN`
All channel scan, scan will end after scan all the channel

enum wifi_sort_method_t
Values:

`WIFI_CONNECT_AP_BY_SIGNAL` = 0
Sort match AP in scan list by RSSI

`WIFI_CONNECT_AP_BY_SECURITY`
Sort match AP in scan list by security mode

enum wifi_ps_type_t
Values:

`WIFI_PS_NONE`
No power save

`WIFI_PS_MIN_MODEM`
Minimum modem power saving. In this mode, station wakes up to receive beacon every DTIM period

`WIFI_PS_MAX_MODEM`
Maximum modem power saving. In this mode, interval to receive beacons is determined by the listen_interval parameter in *wifi_sta_config_t*

enum wifi_bandwidth_t

Values:

WIFI_BW_HT20 = 1

WIFI_BW_HT40

enum wifi_storage_t

Values:

WIFI_STORAGE_FLASH

all configuration will strore in both memory and flash

WIFI_STORAGE_RAM

all configuration will only store in the memory

enum wifi_vendor_ie_type_t

Vendor Information Element type.

Determines the frame type that the IE will be associated with.

Values:

WIFI_VND_IE_TYPE_BEACON

WIFI_VND_IE_TYPE_PROBE_REQ

WIFI_VND_IE_TYPE_PROBE_RESP

WIFI_VND_IE_TYPE_ASSOC_REQ

WIFI_VND_IE_TYPE_ASSOC_RESP

enum wifi_vendor_ie_id_t

Vendor Information Element index.

Each IE type can have up to two associated vendor ID elements.

Values:

WIFI_VND_IE_ID_0

WIFI_VND_IE_ID_1

enum wifi_promiscuous_pkt_type_t

Promiscuous frame type.

Passed to promiscuous mode RX callback to indicate the type of parameter in the buffer.

Values:

WIFI_PKT_MGMT

Management frame, indicates ‘buf’ argument is *wifi_promiscuous_pkt_t*

WIFI_PKT_CTRL

Control frame, indicates ‘buf’ argument is *wifi_promiscuous_pkt_t*

`WIFI_PKT_DATA`
: Data frame, indiciates 'buf' argument is *wifi_promiscuous_pkt_t*

`WIFI_PKT_MISC`
: Other type, such as MIMO etc. 'buf' argument is *wifi_promiscuous_pkt_t* but the payload is zero length.

enum wifi_ant_mode_t

WiFi antenna mode.

Values:

`WIFI_ANT_MODE_ANT0`
: Enable WiFi antenna 0 only

`WIFI_ANT_MODE_ANT1`
: Enable WiFi antenna 1 only

`WIFI_ANT_MODE_AUTO`
: Enable WiFi antenna 0 and 1, automatically select an antenna

`WIFI_ANT_MODE_MAX`
: Invalid WiFi enabled antenna

enum wifi_phy_rate_t

WiFi PHY rate encodings.

Values:

`WIFI_PHY_RATE_1M_L` = 0x00
: 1 Mbps with long preamble

`WIFI_PHY_RATE_2M_L` = 0x01
: 2 Mbps with long preamble

`WIFI_PHY_RATE_5M_L` = 0x02
: 5.5 Mbps with long preamble

`WIFI_PHY_RATE_11M_L` = 0x03
: 11 Mbps with long preamble

`WIFI_PHY_RATE_2M_S` = 0x05
: 2 Mbps with short preamble

`WIFI_PHY_RATE_5M_S` = 0x06
: 5.5 Mbps with short preamble

`WIFI_PHY_RATE_11M_S` = 0x07
: 11 Mbps with short preamble

`WIFI_PHY_RATE_48M` = 0x08
: 48 Mbps

`WIFI_PHY_RATE_24M` = 0x09
24 Mbps

`WIFI_PHY_RATE_12M` = 0x0A
12 Mbps

`WIFI_PHY_RATE_6M` = 0x0B
6 Mbps

`WIFI_PHY_RATE_54M` = 0x0C
54 Mbps

`WIFI_PHY_RATE_36M` = 0x0D
36 Mbps

`WIFI_PHY_RATE_18M` = 0x0E
18 Mbps

`WIFI_PHY_RATE_9M` = 0x0F
9 Mbps

`WIFI_PHY_RATE_MCS0_LGI` = 0x10
MCS0 with long GI, 6.5 Mbps for 20MHz, 13.5 Mbps for 40MHz

`WIFI_PHY_RATE_MCS1_LGI` = 0x11
MCS1 with long GI, 13 Mbps for 20MHz, 27 Mbps for 40MHz

`WIFI_PHY_RATE_MCS2_LGI` = 0x12
MCS2 with long GI, 19.5 Mbps for 20MHz, 40.5 Mbps for 40MHz

`WIFI_PHY_RATE_MCS3_LGI` = 0x13
MCS3 with long GI, 26 Mbps for 20MHz, 54 Mbps for 40MHz

`WIFI_PHY_RATE_MCS4_LGI` = 0x14
MCS4 with long GI, 39 Mbps for 20MHz, 81 Mbps for 40MHz

`WIFI_PHY_RATE_MCS5_LGI` = 0x15
MCS5 with long GI, 52 Mbps for 20MHz, 108 Mbps for 40MHz

`WIFI_PHY_RATE_MCS6_LGI` = 0x16
MCS6 with long GI, 58.5 Mbps for 20MHz, 121.5 Mbps for 40MHz

`WIFI_PHY_RATE_MCS7_LGI` = 0x17
MCS7 with long GI, 65 Mbps for 20MHz, 135 Mbps for 40MHz

`WIFI_PHY_RATE_MCS0_SGI` = 0x18
MCS0 with short GI, 7.2 Mbps for 20MHz, 15 Mbps for 40MHz

`WIFI_PHY_RATE_MCS1_SGI` = 0x19
MCS1 with short GI, 14.4 Mbps for 20MHz, 30 Mbps for 40MHz

`WIFI_PHY_RATE_MCS2_SGI` = 0x1A
MCS2 with short GI, 21.7 Mbps for 20MHz, 45 Mbps for 40MHz

`WIFI_PHY_RATE_MCS3_SGI` = 0x1B
MCS3 with short GI, 28.9 Mbps for 20MHz, 60 Mbps for 40MHz

`WIFI_PHY_RATE_MCS4_SGI` = 0x1C
MCS4 with short GI, 43.3 Mbps for 20MHz, 90 Mbps for 40MHz

`WIFI_PHY_RATE_MCS5_SGI` = 0x1D
MCS5 with short GI, 57.8 Mbps for 20MHz, 120 Mbps for 40MHz

`WIFI_PHY_RATE_MCS6_SGI` = 0x1E
MCS6 with short GI, 65 Mbps for 20MHz, 135 Mbps for 40MHz

`WIFI_PHY_RATE_MCS7_SGI` = 0x1F
MCS7 with short GI, 72.2 Mbps for 20MHz, 150 Mbps for 40MHz

`WIFI_PHY_RATE_LORA_250K` = 0x29
250 Kbps

`WIFI_PHY_RATE_LORA_500K` = 0x2A
500 Kbps

`WIFI_PHY_RATE_MAX`

`enum wifi_ioctl_cmd_t`
WiFi ioctl command type.

Values:

`WIFI_IOCTL_SET_STA_HT2040_COEX` = 1
Set the configuration of STA' s HT2040 coexist management

`WIFI_IOCTL_GET_STA_HT2040_COEX`
Get the configuration of STA' s HT2040 coexist management

`WIFI_IOCTL_MAX`

Smart Config

API Reference

Header File

- esp32/include/esp_smartconfig.h

Functions

const char *esp_smartconfig_get_version(void)

Get the version of SmartConfig.

Return

- SmartConfig version const char.

esp_err_t esp_smartconfig_start(*sc_callback_t cb*, ...)

Start SmartConfig, config ESP device to connect AP. You need to broadcast information by phone APP. Device sniffer special packets from the air that containing SSID and password of target AP.

Attention 1. This API can be called in station or softAP-station mode.

Attention 2. Can not call esp_smartconfig_start twice before it finish, please call esp_smartconfig_stop first.

Return

- ESP_OK: succeed
- others: fail

Parameters

- cb: SmartConfig callback function.
- ...: log 1: UART output logs; 0: UART only outputs the result.

esp_err_t esp_smartconfig_stop(void)

Stop SmartConfig, free the buffer taken by esp_smartconfig_start.

Attention Whether connect to AP succeed or not, this API should be called to free memory taken by smartconfig_start.

Return

- ESP_OK: succeed
- others: fail

esp_err_t esp_esptouch_set_timeout(uint8_t *time_s*)

Set timeout of SmartConfig process.

Attention Timing starts from SC_STATUS_FIND_CHANNEL status. SmartConfig will restart if timeout.

Return

- ESP_OK: succeed

- others: fail

Parameters

- `time_s`: range 15s~255s, offset:45s.

esp_err_t **esp_smartconfig_set_type**(*smartconfig_type_t type*)

Set protocol type of SmartConfig.

Attention If users need to set the SmartConfig type, please set it before calling esp_smartconfig_start.

Return

- ESP_OK: succeed
- others: fail

Parameters

- `type`: Choose from the smartconfig_type_t.

esp_err_t **esp_smartconfig_fast_mode**(bool *enable*)

Set mode of SmartConfig. default normal mode.

Attention 1. Please call it before API esp_smartconfig_start.

Attention 2. Fast mode have corresponding APP(phone).

Attention 3. Two mode is compatible.

Return

- ESP_OK: succeed
- others: fail

Parameters

- `enable`: false-disable(default); true-enable;

Type Definitions

typedef void (***sc_callback_t**)(*smartconfig_status_t* status, void *pdata)

The callback of SmartConfig, executed when smart-config status changed.

Parameters

- `status`: Status of SmartConfig:
  - SC_STATUS_GETTING_SSID_PSWD : pdata is a pointer of smartconfig_type_t, means config type.

- SC_STATUS_LINK : pdata is a pointer to *wifi_config_t*.
- SC_STATUS_LINK_OVER : pdata is a pointer of phone' s IP address(4 bytes) if pdata unequal NULL.
- otherwise : parameter void *pdata is NULL.

- `pdata`: According to the different status have different values.

Enumerations

enum smartconfig_status_t

Values:

SC_STATUS_WAIT = 0

Waiting to start connect

SC_STATUS_FIND_CHANNEL

Finding target channel

SC_STATUS_GETTING_SSID_PSWD

Getting SSID and password of target AP

SC_STATUS_LINK

Connecting to target AP

SC_STATUS_LINK_OVER

Connected to AP successfully

enum smartconfig_type_t

Values:

SC_TYPE_ESPTOUCH = 0

protocol: ESPTouch

SC_TYPE_AIRKISS

protocol: AirKiss

SC_TYPE_ESPTOUCH_AIRKISS

protocol: ESPTouch and AirKiss

ESP-NOW

Overview

ESP-NOW is a kind of connectionless WiFi communication protocol which is defined by Espressif. In ESP-NOW, application data is encapsulated in vendor-specific action frame and then transmitted from one WiFi device to another without connection. CTR with CBC-MAC Protocol(CCMP) is used to protect the action frame for security. ESP-NOW is widely used in smart light, remote controlling, sensor, etc.

Frame Format

ESP-NOW uses vendor-specific action frame to transmit ESP-NOW data. The format of vendor-specific action frame is as follows:

```
-------------------------------------------------------------------------------------------
| MAC Header | Category Code | Organization Identifier | Vendor Specific Content | FCS |
-------------------------------------------------------------------------------------------
                  1 byte              3 bytes                  7~255 bytes
```

- Category Code: The Category field is set to the value(127) indicating the vendor-specific category.
- **Organization Identifier: The Organization Identifier contains a unique identifier(0x18fe34) which is the** of MAC address applied by Espressif.
- Vendor Specific Content: The Vendor Specific Content contains vendor-specific field as follows:

```
-------------------------------------------------------------------------------
| Element ID | Length | Organization Identifier | Type | Version |    Body    |
-------------------------------------------------------------------------------
    1 byte     1 byte            3 bytes         1 byte   1 byte   0~250 bytes
```

- Element ID: The Element ID field is set to the value(221) indicating the vendor-specific element.
- Length: The length is the total length of Organization Identifier, Type, Version and Body.
- **Organization Identifier: The Organization Identifier contains a unique identifier(0x18fe34) which is the** of MAC address applied by Espressif.
- Type: The Type field is set to the value(4) indicating ESP-NOW.
- Version: The Version field is set to the version of ESP-NOW.
- Body: The Body contains the ESP-NOW data.

As ESP-NOW is connectionless, the MAC header is a little different from that of standard frames. The FromDS and ToDS bits of FrameControl field are both 0. The first address field is set to the destination address. The second address field is set to the source address. The third address field is set to broadcast address(0xff:0xff:0xff:0xff:0xff:0xff).

Security

ESP-NOW use CCMP method which can be referenced in IEEE Std. 802.11-2012 to protect the vendor-specific action frame. The WiFi device maintains a Primary Master Key(PMK) and several Local Master Keys(LMK). The lengths of them are 16 bytes. PMK is used to encrypt LMK with AES-128 algorithm. Call `esp_now_set_pmk()` to set PMK. If PMK is not set, a default PMK will be used. If LMK of the paired

device is set, it will be used to encrypt the vendor-specific action frame with CCMP method. The maximum number of different LMKs is six. Do not support encrypting multicast vendor-specific action frame.

Initialization and De-initialization

Call `esp_now_init()` to initialize ESP-NOW and `esp_now_deinit()` to de-initialize ESP-NOW. ESP-NOW data must be transmitted after WiFi is started, so it is recommended to start WiFi before initializing ESP-NOW and stop WiFi after de-initializing ESP-NOW. When `esp_now_deinit()` is called, all of the information of paired devices will be deleted.

Add Paired Device

Before sending data to other device, call `esp_now_add_peer()` to add it to the paired device list first. The maximum number of paired devices is twenty. If security is enabled, the LMK must be set. ESP-NOW data can be sent from station or softap interface. Make sure that the interface is enabled before sending ESP-NOW data. A device with broadcast MAC address must be added before sending broadcast data. The range of the channel of paired device is from 0 to 14. If the channel is set to 0, data will be sent on the current channel. Otherwise, the channel must be set as the channel that the local device is on.

Send ESP-NOW Data

Call `esp_now_send()` to send ESP-NOW data and `esp_now_register_send_cb` to register sending callback function. It will return *ESP_NOW_SEND_SUCCESS* in sending callback function if the data is received successfully on MAC layer. Otherwise, it will return *ESP_NOW_SEND_FAIL*. There are several reasons failing to send ESP-NOW data, for example, the destination device doesn' t exist, the channels of the devices are not the same, the action frame is lost when transmiting on the air, etc. It is not guaranteed that application layer can receive the data. If necessary, send back ack data when receiving ESP-NOW data. If receiving ack data timeout happens, retransmit the ESP-NOW data. A sequence number can also be assigned to ESP-NOW data to drop the duplicated data.

If there is a lot of ESP-NOW data to send, call `esp_now_send()` to send less than or equal to 250 bytes of data once a time. Note that too short interval between sending two ESP-NOW datas may lead to disorder of sending callback function. So, it is recommended that sending the next ESP-NOW data after the sending callback function of previous sending has returned. The sending callback function runs from a high-priority WiFi task. So, do not do lengthy operations in the callback function. Instead, post necessary data to a queue and handle it from a lower priority task.

Receiving ESP-NOW Data

Call `esp_now_register_recv_cb` to register receiving callback function. When receiving ESP-NOW data, receiving callback function is called. The receiving callback function also runs from WiFi task. So, do not

do lengthy operations in the callback function. Instead, post necessary data to a queue and handle it from a lower priority task.

API Reference

Header File

- esp32/include/esp_now.h

Functions

esp_err_t **esp_now_init**(void)

Initialize ESPNOW function.

Return

- ESP_OK : succeed
- ESP_ERR_ESPNOW_INTERNAL : Internal error

esp_err_t **esp_now_deinit**(void)

De-initialize ESPNOW function.

Return

- ESP_OK : succeed

esp_err_t **esp_now_get_version**(uint32_t **version*)

Get the version of ESPNOW.

Return

- ESP_OK : succeed
- ESP_ERR_ESPNOW_ARG : invalid argument

Parameters

- `version`: ESPNOW version

esp_err_t **esp_now_register_recv_cb**(*esp_now_recv_cb_t cb*)

Register callback function of receiving ESPNOW data.

Return

- ESP_OK : succeed
- ESP_ERR_ESPNOW_NOT_INIT : ESPNOW is not initialized

- ESP_ERR_ESPNOW_INTERNAL : internal error

Parameters

- cb: callback function of receiving ESPNOW data

esp_err_t **esp_now_unregister_recv_cb**(void)

Unregister callback function of receiving ESPNOW data.

Return

- ESP_OK : succeed
- ESP_ERR_ESPNOW_NOT_INIT : ESPNOW is not initialized

esp_err_t **esp_now_register_send_cb**(*esp_now_send_cb_t cb*)

Register callback function of sending ESPNOW data.

Return

- ESP_OK : succeed
- ESP_ERR_ESPNOW_NOT_INIT : ESPNOW is not initialized
- ESP_ERR_ESPNOW_INTERNAL : internal error

Parameters

- cb: callback function of sending ESPNOW data

esp_err_t **esp_now_unregister_send_cb**(void)

Unregister callback function of sending ESPNOW data.

Return

- ESP_OK : succeed
- ESP_ERR_ESPNOW_NOT_INIT : ESPNOW is not initialized

esp_err_t **esp_now_send**(**const** uint8_t **peer_addr*, **const** uint8_t **data*, size_t *len*)

Send ESPNOW data.

Attention 1. If peer_addr is not NULL, send data to the peer whose MAC address matches peer_addr

Attention 2. If peer_addr is NULL, send data to all of the peers that are added to the peer list

Attention 3. The maximum length of data must be less than ESP_NOW_MAX_DATA_LEN

Attention 4. The buffer pointed to by data argument does not need to be valid after esp_now_send returns

Return

- ESP_OK : succeed
- ESP_ERR_ESPNOW_NOT_INIT : ESPNOW is not initialized
- ESP_ERR_ESPNOW_ARG : invalid argument
- ESP_ERR_ESPNOW_INTERNAL : internal error
- ESP_ERR_ESPNOW_NO_MEM : out of memory
- ESP_ERR_ESPNOW_NOT_FOUND : peer is not found
- ESP_ERR_ESPNOW_IF : current WiFi interface doesn't match that of peer

Parameters

- `peer_addr`: peer MAC address
- `data`: data to send
- `len`: length of data

esp_err_t **esp_now_add_peer**(const *esp_now_peer_info_t* **peer*)

Add a peer to peer list.

Return

- ESP_OK : succeed
- ESP_ERR_ESPNOW_NOT_INIT : ESPNOW is not initialized
- ESP_ERR_ESPNOW_ARG : invalid argument
- ESP_ERR_ESPNOW_FULL : peer list is full
- ESP_ERR_ESPNOW_NO_MEM : out of memory
- ESP_ERR_ESPNOW_EXIST : peer has existed

Parameters

- `peer`: peer information

esp_err_t **esp_now_del_peer**(const uint8_t **peer_addr*)

Delete a peer from peer list.

Return

- ESP_OK : succeed
- ESP_ERR_ESPNOW_NOT_INIT : ESPNOW is not initialized
- ESP_ERR_ESPNOW_ARG : invalid argument
- ESP_ERR_ESPNOW_NOT_FOUND : peer is not found

Parameters

- `peer_addr`: peer MAC address

esp_err_t **esp_now_mod_peer**(**const** *esp_now_peer_info_t* **peer*)

Modify a peer.

Return

- ESP_OK : succeed
- ESP_ERR_ESPNOW_NOT_INIT : ESPNOW is not initialized
- ESP_ERR_ESPNOW_ARG : invalid argument
- ESP_ERR_ESPNOW_FULL : peer list is full

Parameters

- `peer`: peer information

esp_err_t **esp_now_get_peer**(**const** uint8_t **peer_addr*, *esp_now_peer_info_t* **peer*)

Get a peer whose MAC address matches peer_addr from peer list.

Return

- ESP_OK : succeed
- ESP_ERR_ESPNOW_NOT_INIT : ESPNOW is not initialized
- ESP_ERR_ESPNOW_ARG : invalid argument
- ESP_ERR_ESPNOW_NOT_FOUND : peer is not found

Parameters

- `peer_addr`: peer MAC address
- `peer`: peer information

esp_err_t **esp_now_fetch_peer**(bool *from_head*, *esp_now_peer_info_t* **peer*)

Fetch a peer from peer list. Only return the peer which address is unicast, for the multicast/broadcast address, the function will ignore and try to find the next in the peer list.

Return

- ESP_OK : succeed
- ESP_ERR_ESPNOW_NOT_INIT : ESPNOW is not initialized
- ESP_ERR_ESPNOW_ARG : invalid argument
- ESP_ERR_ESPNOW_NOT_FOUND : peer is not found

Parameters

- `from_head`: fetch from head of list or not

- `peer`: peer information

bool **esp_now_is_peer_exist**(**const** uint8_t *_peer_addr_)

Peer exists or not.

Return

- true : peer exists
- false : peer not exists

Parameters

- `peer_addr`: peer MAC address

esp_err_t **esp_now_get_peer_num**(*esp_now_peer_num_t* *_num_)

Get the number of peers.

Return

- ESP_OK : succeed
- ESP_ERR_ESPNOW_NOT_INIT : ESPNOW is not initialized
- ESP_ERR_ESPNOW_ARG : invalid argument

Parameters

- `num`: number of peers

esp_err_t **esp_now_set_pmk**(**const** uint8_t *_pmk_)

Set the primary master key.

Attention 1. primary master key is used to encrypt local master key

Return

- ESP_OK : succeed
- ESP_ERR_ESPNOW_NOT_INIT : ESPNOW is not initialized
- ESP_ERR_ESPNOW_ARG : invalid argument

Parameters

- `pmk`: primary master key

Structures

struct esp_now_peer_info

ESPNOW peer information parameters.

Public Members

uint8_t **peer_addr**[**ESP_NOW_ETH_ALEN**]

ESPNOW peer MAC address that is also the MAC address of station or softap

uint8_t **lmk**[**ESP_NOW_KEY_LEN**]

ESPNOW peer local master key that is used to encrypt data

uint8_t **channel**

Wi-Fi channel that peer uses to send/receive ESPNOW data. If the value is 0, use the current channel which station or softap is on. Otherwise, it must be set as the channel that station or softap is on.

wifi_interface_t **ifidx**

Wi-Fi interface that peer uses to send/receive ESPNOW data

bool **encrypt**

ESPNOW data that this peer sends/receives is encrypted or not

void ***priv**

ESPNOW peer private data

struct esp_now_peer_num

Number of ESPNOW peers which exist currently.

Public Members

int **total_num**

Total number of ESPNOW peers, maximum value is ESP_NOW_MAX_TOTAL_PEER_NUM

int **encrypt_num**

Number of encrypted ESPNOW peers, maximum value is ESP_NOW_MAX_ENCRYPT_PEER_NUM

Macros

ESP_ERR_ESPNOW_BASE

ESPNOW error number base.

ESP_ERR_ESPNOW_NOT_INIT

ESPNOW is not initialized.

ESP_ERR_ESPNOW_ARG

Invalid argument

ESP_ERR_ESPNOW_NO_MEM

Out of memory

`ESP_ERR_ESPNOW_FULL`
ESPNOW peer list is full

`ESP_ERR_ESPNOW_NOT_FOUND`
ESPNOW peer is not found

`ESP_ERR_ESPNOW_INTERNAL`
Internal error

`ESP_ERR_ESPNOW_EXIST`
ESPNOW peer has existed

`ESP_ERR_ESPNOW_IF`
Interface error

`ESP_NOW_ETH_ALEN`
Length of ESPNOW peer MAC address

`ESP_NOW_KEY_LEN`
Length of ESPNOW peer local master key

`ESP_NOW_MAX_TOTAL_PEER_NUM`
Maximum number of ESPNOW total peers

`ESP_NOW_MAX_ENCRYPT_PEER_NUM`
Maximum number of ESPNOW encrypted peers

`ESP_NOW_MAX_DATA_LEN`
Maximum length of ESPNOW data which is sent very time

Type Definitions

`typedef struct` *esp_now_peer_info* `esp_now_peer_info_t`
ESPNOW peer information parameters.

`typedef struct` *esp_now_peer_num* `esp_now_peer_num_t`
Number of ESPNOW peers which exist currently.

`typedef` void (*`esp_now_recv_cb_t`)(`const` uint8_t *mac_addr, `const` uint8_t *data, int data_len)
Callback function of receiving ESPNOW data.

Parameters

- `mac_addr`: peer MAC address
- `data`: received data
- `data_len`: length of received data

typedef void (***esp_now_send_cb_t**)(**const** uint8_t *mac_addr, *esp_now_send_status_t* status)

Callback function of sending ESPNOW data.

Parameters

- `mac_addr`: peer MAC address
- `status`: status of sending ESPNOW data (succeed or fail)

Enumerations

enum esp_now_send_status_t

Status of sending ESPNOW data .

Values:

`ESP_NOW_SEND_SUCCESS` = 0

Send ESPNOW data successfully

`ESP_NOW_SEND_FAIL`

Send ESPNOW data fail

ESP-MESH Programming Guide

This is a programming guide for ESP-MESH, including the API reference and coding examples. This guide is split into the following parts:

1. *ESP-MESH Programming Model*
2. *Writing an ESP-MESH Application*
3. *Self Organized Networking*
4. *Application Examples*
5. *API Reference*

For documentation regarding the ESP-MESH protocol, please see the *ESP-MESH API Guide*.

ESP-MESH Programming Model

Software Stack

The ESP-MESH software stack is built atop the Wi-Fi Driver/FreeRTOS and may use the LwIP Stack in some instances (i.e. the root node). The following diagram illustrates the ESP-MESH software stack.

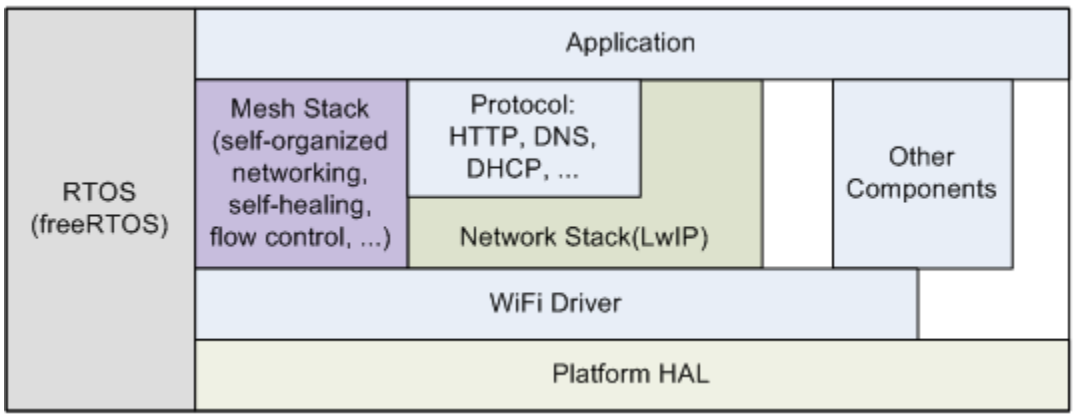

图 2: ESP-MESH Software Stack

System Events

An application interfaces with ESP-MESH via **ESP-MESH Events**. Since ESP-MESH is built atop the Wi-Fi stack, it is also possible for the application to interface with the Wi-Fi driver via the **Wi-Fi Event Task**. The following diagram illustrates the interfaces for the various System Events in an ESP-MESH application.

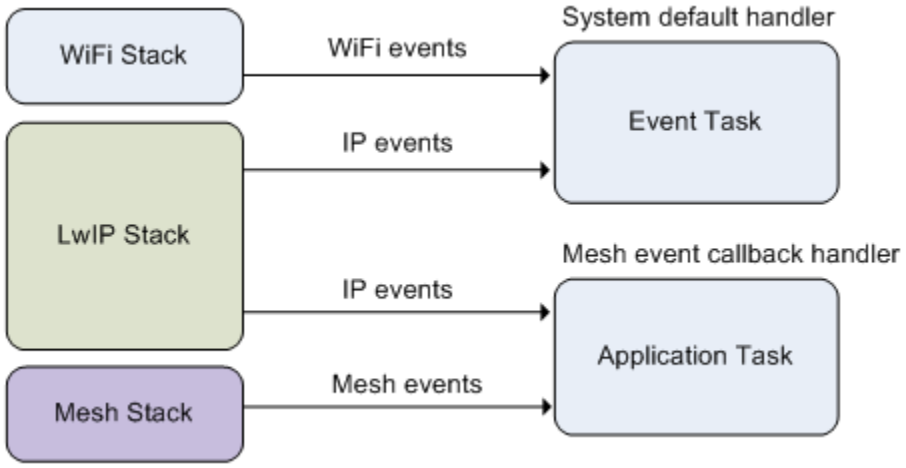

图 3: ESP-MESH System Events Delivery

The *mesh_event_id_t* defines all possible ESP-MESH system events and can indicate events such as the connection/disconnection of parent/child. Before ESP-MESH system events can be used, the application must register a **Mesh Event Callback** via *esp_mesh_set_config()*. The callback is used to receive events from the ESP-MESH stack as well as the LwIP Stack and should contain handlers for each event relevant to the application.

Typical use cases of system events include using events such as *MESH_EVENT_PARENT_CONNECTED* and *MESH_EVENT_CHILD_CONNECTED* to indicate when a node can begin transmitting data upstream and down-

stream respectively. Likewise, *MESH_EVENT_ROOT_GOT_IP* and *MESH_EVENT_ROOT_LOST_IP* can be used to indicate when the root node can and cannot transmit data to the external IP network.

警告: When using ESP-MESH under self-organized mode, users must ensure that no calls to Wi-Fi API are made. This is due to the fact that the self-organizing mode will internally make Wi-Fi API calls to connect/disconnect/scan etc. **Any Wi-Fi calls from the application (including calls from callbacks and handlers of Wi-Fi events) may interfere with ESP-MESH' s self-organizing behavior**. Therefore, user' s should not call Wi-Fi APIs after *esp_mesh_start()* is called, and before *esp_mesh_stop()* is called.

LwIP & ESP-MESH

The application can access the ESP-MESH stack directly without having to go through the LwIP stack. The LwIP stack is only required by the root node to transmit/receive data to/from an external IP network. However, since every node can potentially become the root node (due to automatic root node selection), each node must still initialize the LwIP stack.

Each node is required to initialize LwIP by calling *tcpip_adapter_init()*. In order to prevent non-root node access to LwIP, the application should stop the following services after LwIP initialization:

- DHCP server service on the softAP interface.
- DHCP client service on the station interface.

The following code snippet demonstrates how to initialize LwIP for ESP-MESH applications.

```
/*  tcpip initialization */
tcpip_adapter_init();
/*
 * for mesh
 * stop DHCP server on softAP interface by default
 * stop DHCP client on station interface by default
 */
ESP_ERROR_CHECK(tcpip_adapter_dhcps_stop(TCPIP_ADAPTER_IF_AP));
ESP_ERROR_CHECK(tcpip_adapter_dhcpc_stop(TCPIP_ADAPTER_IF_STA));
/* do not specify system event callback, use NULL instead. */
ESP_ERROR_CHECK(esp_event_loop_init(NULL, NULL));
```

注解: ESP-MESH requires a root node to be connected with a router. Therefore, in the event that a node becomes the root, **the corresponding handler must start the DHCP client service and immediately obtain an IP address**. Doing so will allow other nodes to begin transmitting/receiving packets to/from

the external IP network. However, this step is unnecessary if static IP settings are used.

Writing an ESP-MESH Application

The prerequisites for starting ESP-MESH is to initialize LwIP and Wi-Fi, The following code snippet demonstrates the necessary prerequisite steps before ESP-MESH itself can be initialized.

```
tcpip_adapter_init();
/*
 * for mesh
 * stop DHCP server on softAP interface by default
 * stop DHCP client on station interface by default
 */
ESP_ERROR_CHECK(tcpip_adapter_dhcps_stop(TCPIP_ADAPTER_IF_AP));
ESP_ERROR_CHECK(tcpip_adapter_dhcpc_stop(TCPIP_ADAPTER_IF_STA));
/* do not specify system event callback, use NULL instead. */
ESP_ERROR_CHECK(esp_event_loop_init(NULL, NULL));

/*  Wi-Fi initialization */
wifi_init_config_t config = WIFI_INIT_CONFIG_DEFAULT();
ESP_ERROR_CHECK(esp_wifi_init(&config));
ESP_ERROR_CHECK(esp_wifi_set_storage(WIFI_STORAGE_FLASH));
ESP_ERROR_CHECK(esp_wifi_start());
```

After initializing LwIP and Wi-Fi, the process of getting an ESP-MESH network up and running can be summarized into the following three steps:

1. *Initialize Mesh*
2. *Configuring an ESP-MESH Network*
3. *Start Mesh*

Initialize Mesh

The following code snippet demonstrates how to initialize ESP-MESH

```
/*  mesh initialization */
ESP_ERROR_CHECK(esp_mesh_init());
```

Configuring an ESP-MESH Network

ESP-MESH is configured via *esp_mesh_set_config()* which receives its arguments using the *mesh_cfg_t* structure. The structure contains the following parameters used to configure ESP-MESH:

Parameter	Description
Channel	Range from 1 to 14
Event Callback	Callback for Mesh Events, see *mesh_event_cb_t*
Mesh ID	ID of ESP-MESH Network, see *mesh_addr_t*
Router	Router Configuration, see *mesh_router_t*
Mesh AP	Mesh AP Configuration, see *mesh_ap_cfg_t*
Crypto Functions	Crypto Functions for Mesh IE, see `mesh_crypto_funcs_t`

The following code snippet demonstrates how to configure ESP-MESH.

```
/* Enable the Mesh IE encryption by default */
mesh_cfg_t cfg = MESH_INIT_CONFIG_DEFAULT();
/* mesh ID */
memcpy((uint8_t *) &cfg.mesh_id, MESH_ID, 6);
/* mesh event callback */
cfg.event_cb = &mesh_event_handler;
/* channel (must match the router's channel) */
cfg.channel = CONFIG_MESH_CHANNEL;
/* router */
cfg.router.ssid_len = strlen(CONFIG_MESH_ROUTER_SSID);
memcpy((uint8_t *) &cfg.router.ssid, CONFIG_MESH_ROUTER_SSID, cfg.router.ssid_len);
memcpy((uint8_t *) &cfg.router.password, CONFIG_MESH_ROUTER_PASSWD,
       strlen(CONFIG_MESH_ROUTER_PASSWD));
/* mesh softAP */
cfg.mesh_ap.max_connection = CONFIG_MESH_AP_CONNECTIONS;
memcpy((uint8_t *) &cfg.mesh_ap.password, CONFIG_MESH_AP_PASSWD,
       strlen(CONFIG_MESH_AP_PASSWD));
ESP_ERROR_CHECK(esp_mesh_set_config(&cfg));
```

Start Mesh

The following code snippet demonstrates how to start ESP-MESH.

```
/* mesh start */
ESP_ERROR_CHECK(esp_mesh_start());
```

After starting ESP-MESH, the application should check for ESP-MESH events to determine when it has connected to the network. After connecting, the application can start transmitting and receiving packets over the ESP-MESH network using *esp_mesh_send()* and *esp_mesh_recv()*.

Self Organized Networking

Self organized networking is a feature of ESP-MESH where nodes can autonomously scan/select/connect/reconnect to other nodes and routers. This feature allows an ESP-MESH network to operate with high degree of autonomy by making the network robust to dynamic network topologies and conditions. With self organized networking enabled, nodes in an ESP-MESH network are able to carryout the following actions without autonomously:

- Selection or election of the root node (see **Automatic Root Node Selection** in *Building a Network*)
- Selection of a preferred parent node (see **Parent Node Selection** in *Building a Network*)
- Automatic reconnection upon detecting a disconnection (see **Intermediate Parent Node Failure** in *Managing a Network*)

When self organized networking is enabled, the ESP-MESH stack will internally make calls to Wi-Fi driver APIs. Therefore, **the application layer should not make any calls to Wi-Fi driver APIs whilst self organized networking is enabled as doing so would risk interfering with ESP-MESH**.

Toggling Self Organized Networking

Self organized networking can be enabled or disabled by the application at runtime by calling the *esp_mesh_set_self_organized()* function. The function has the two following parameters:

- `bool enable` specifies whether to enable or disable self organized networking.
- `bool select_parent` specifies whether a new parent node should be selected when enabling self organized networking. Selecting a new parent has different effects depending the node type and the node' s current state. This parameter is unused when disabling self organized networking.

Disabling Self Organized Networking

The following code snippet demonstrates how to disable self organized networking.

```
//Disable self organized networking
esp_mesh_set_self_organized(false, false);
```

ESP-MESH will attempt to maintain the node' s current Wi-Fi state when disabling self organized networking.

- If the node was previously connected to other nodes, it will remain connected.

- If the node was previously disconnected and was scanning for a parent node or router, it will stop scanning.
- If the node was previously attempting to reconnect to a parent node or router, it will stop reconnecting.

Enabling Self Organized Networking

ESP-MESH will attempt to maintain the node's current Wi-Fi state when enabling self organized networking. However, depending on the node type and whether a new parent is selected, the Wi-Fi state of the node can change. The following table shows effects of enabling self organized networking.

Select Parent	Is Root Node	Effects
N	N	• Nodes already connected to a parent node will remain connected. • Nodes previously scanning for a parent nodes will stop scanning. Call *esp_mesh_connect()* to restart.
	Y	• A root node already connected to router will stay connected. • A root node disconnected from router will need to call *esp_mesh_connect()* to reconnect.
Y	N	• Nodes without a parent node will automatically select a preferred parent and connect. • Nodes already connected to a parent node will disconnect, reselect a preferred parent node, and connect.
	Y	• For a root node to connect to a parent node, it must give up it' s role as root. Therefore, a root node will disconnect from the router and all child nodes, select a preferred parent node, and connect.

The following code snipping demonstrates how to enable self organized networking.

```
//Enable self organized networking and select a new parent
esp_mesh_set_self_organized(true, true);

...

//Enable self organized networking and manually reconnect
esp_mesh_set_self_organized(true, false);
esp_mesh_connect();
```

Calling Wi-Fi Driver API

There can be instances in which an application may want to directly call Wi-Fi driver API whilst using ESP-MESH. For example, an application may want to manually scan for neighboring APs. However, **self organized networking must be disabled before the application calls any Wi-Fi driver APIs**. This will prevent the ESP-MESH stack from attempting to call any Wi-Fi driver APIs and potentially interfering with the application's calls.

Therefore, application calls to Wi-Fi driver APIs should be placed in between calls of *esp_mesh_set_self_organized()* which disable and enable self organized networking. The following code snippet demonstrates how an application can safely call *esp_wifi_scan_start()* whilst using ESP-MESH.

```
//Disable self organized networking
esp_mesh_set_self_organized(0, 0);

//Stop any scans already in progress
esp_wifi_scan_stop();
//Manually start scan. Will automatically stop when run to completion
esp_wifi_scan_start();

//Process scan results

...

//Re-enable self organized networking if still connected
esp_mesh_set_self_organized(1, 0);

...

//Re-enable self organized networking if non-root and disconnected
esp_mesh_set_self_organized(1, 1);
```

(下页继续)

(续上页)

```
...

//Re-enable self organized networking if root and disconnected
esp_mesh_set_self_organized(1, 0);  //Don't select new parent
esp_mesh_connect();                 //Manually reconnect to router
```

Application Examples

ESP-IDF contains these ESP-MESH example projects:

The Internal Communication Example demonstrates how to setup a ESP-MESH network and have the root node send a data packet to every node within the network.

The Manual Networking Example demonstrates how to use ESP-MESH without the self-organizing features. This example shows how to program a node to manually scan for a list of potential parent nodes and select a parent node based on custom criteria.

API Reference

Header File

- esp32/include/esp_mesh.h

Functions

esp_err_t **esp_mesh_init**(void)

Mesh initialization.

- Check whether Wi-Fi is started.
- Initialize mesh global variables with default values.

Attention This API shall be called after Wi-Fi is started.

Return

- ESP_OK
- ESP_FAIL

esp_err_t **esp_mesh_deinit**(void)

Mesh de-initialization.

- Release resources and stop the mesh

Return

- ESP_OK
- ESP_FAIL

esp_err_t **esp_mesh_start**(void)

Start mesh.

- Initialize mesh IE.
- Start mesh network management service.
- Create TX and RX queues according to the configuration.
- Register mesh packets receive callback.

Attention This API shall be called after mesh initialization and configuration.

Return

- ESP_OK
- ESP_FAIL
- ESP_ERR_MESH_NOT_INIT
- ESP_ERR_MESH_NOT_CONFIG
- ESP_ERR_MESH_NO_MEMORY

esp_err_t **esp_mesh_stop**(void)

Stop mesh.

- Deinitialize mesh IE.
- Disconnect with current parent.
- Disassociate all currently associated children.
- Stop mesh network management service.
- Unregister mesh packets receive callback.
- Delete TX and RX queues.
- Release resources.
- Restore Wi-Fi softAP to default settings if Wi-Fi dual mode is enabled.

Return

- ESP_OK

- ESP_FAIL

esp_err_t **esp_mesh_send**(**const** *mesh_addr_t* *to, **const** *mesh_data_t* *data, int *flag*, **const** *mesh_opt_t* *opt*[], int *opt_count*)

Send a packet over the mesh network.

- Send a packet to any device in the mesh network.
- Send a packet to external IP network.

Attention This API is not reentrant.

Return

- ESP_OK
- ESP_FAIL
- ESP_ERR_MESH_ARGUMENT
- ESP_ERR_MESH_NOT_START
- ESP_ERR_MESH_DISCONNECTED
- ESP_ERR_MESH_OPT_UNKNOWN
- ESP_ERR_MESH_EXCEED_MTU
- ESP_ERR_MESH_NO_MEMORY
- ESP_ERR_MESH_TIMEOUT
- ESP_ERR_MESH_QUEUE_FULL
- ESP_ERR_MESH_NO_ROUTE_FOUND
- ESP_ERR_MESH_DISCARD

Parameters

- `to`: the address of the final destination of the packet
  - If the packet is to the root, set this parameter to NULL.
  - If the packet is to an external IP network, set this parameter to the IPv4:PORT combination. This packet will be delivered to the root firstly, then the root will forward this packet to the final IP server address.
- `data`: pointer to a sending mesh packet
  - Field size should not exceed MESH_MPS. Note that the size of one mesh packet should not exceed MESH_MTU.
  - Field proto should be set to data protocol in use (default is MESH_PROTO_BIN for binary).

  - Field tos should be set to transmission tos (type of service) in use (default is MESH_TOS_P2P for point-to-point reliable).

- `flag`: bitmap for data sent
  - Speed up the route search
    * If the packet is to the root and "to" parameter is NULL, set this parameter to 0.
    * If the packet is to an internal device, MESH_DATA_P2P should be set.
    * If the packet is to the root ("to" parameter isn't NULL) or to external IP network, MESH_DATA_TODS should be set.
    * If the packet is from the root to an internal device, MESH_DATA_FROMDS should be set.
  - Specify whether this API is block or non-block, block by default
    * If needs non-block, MESH_DATA_NONBLOCK should be set.
  - In the situation of the root change, MESH_DATA_DROP identifies this packet can be dropped by the new root for upstream data to external IP network, we try our best to avoid data loss caused by the root change, but there is a risk that the new root is running out of memory because most of memory is occupied by the pending data which isn't read out in time by esp_mesh_recv_toDS().

    Generally, we suggest esp_mesh_recv_toDS() is called after a connection with IP network is created. Thus data outgoing to external IP network via socket is just from reading esp_mesh_recv_toDS() which avoids unnecessary memory copy.

- `opt`: options
  - In case of sending a packet to a certain group, MESH_OPT_SEND_GROUP is a good choice. In this option, the value field should be set to the target receiver addresses in this group.
  - Root sends a packet to an internal device, this packet is from external IP network in case the receiver device responds this packet, MESH_OPT_RECV_DS_ADDR is required to attach the target DS address.

- `opt_count`: option count
  - Currently, this API only takes one option, so opt_count is only supported to be 1.

esp_err_t **esp_mesh_recv**(*mesh_addr_t* **from*, *mesh_data_t* **data*, int *timeout_ms*, int **flag*, *mesh_opt_t opt*[], int *opt_count*)

Receive a packet targeted to self over the mesh network.

flag could be MESH_DATA_FROMDS or MESH_DATA_TODS.

Attention Mesh RX queue should be checked regularly to avoid running out of memory.

- Use esp_mesh_get_rx_pending() to check the number of packets available in the queue waiting to be received by applications.

Return

- ESP_OK
- ESP_ERR_MESH_ARGUMENT
- ESP_ERR_MESH_NOT_START
- ESP_ERR_MESH_TIMEOUT
- ESP_ERR_MESH_DISCARD

Parameters

- `from`: the address of the original source of the packet
- `data`: pointer to the received mesh packet
  - Field proto is the data protocol in use. Should follow it to parse the received data.
  - Field tos is the transmission tos (type of service) in use.
- `timeout_ms`: wait time if a packet isn't immediately available (0:no wait, portMAX_DELAY:wait forever)
- `flag`: bitmap for data received
  - MESH_DATA_FROMDS represents data from external IP network
  - MESH_DATA_TODS represents data directed upward within the mesh network

Parameters

- `opt`: options desired to receive
  - MESH_OPT_RECV_DS_ADDR attaches the DS address
- `opt_count`: option count desired to receive
  - Currently, this API only takes one option, so opt_count is only supported to be 1.

esp_err_t **esp_mesh_recv_toDS**(*mesh_addr_t* **from*, *mesh_addr_t* **to*, *mesh_data_t* **data*, int *timeout_ms*, int **flag*, *mesh_opt_t* *opt*[], int *opt_count*)

Receive a packet targeted to external IP network.

- Root uses this API to receive packets destined to external IP network
- Root forwards the received packets to the final destination via socket.
- If no socket connection is ready to send out the received packets and this esp_mesh_recv_toDS() hasn't been called by applications, packets from the whole mesh network will be pending in toDS queue.

Use esp_mesh_get_rx_pending() to check the number of packets available in the queue waiting to be received by applications in case of running out of memory in the root.

Using esp_mesh_set_xon_qsize() users may configure the RX queue size, default:32. If this size is too large, and esp_mesh_recv_toDS() isn't called in time, there is a risk that a great deal of memory is occupied by the pending packets. If this size is too small, it will impact the efficiency on upstream. How to decide this value depends on the specific application scenarios.

flag could be MESH_DATA_TODS.

Attention This API is only called by the root.

Return

- ESP_OK
- ESP_ERR_MESH_ARGUMENT
- ESP_ERR_MESH_NOT_START
- ESP_ERR_MESH_TIMEOUT
- ESP_ERR_MESH_DISCARD
- ESP_ERR_MESH_RECV_RELEASE

Parameters

- `from`: the address of the original source of the packet
- `to`: the address contains remote IP address and port (IPv4:PORT)
- `data`: pointer to the received packet
  - Contain the protocol and applications should follow it to parse the data.
- `timeout_ms`: wait time if a packet isn't immediately available (0:no wait, portMAX_DELAY:wait forever)
- `flag`: bitmap for data received
  - MESH_DATA_TODS represents the received data target to external IP network. Root shall forward this data to external IP network via the association with router.

Parameters

- `opt`: options desired to receive
- `opt_count`: option count desired to receive

esp_err_t **esp_mesh_set_config(const** *mesh_cfg_t* ***config)**

Set mesh stack configuration.

- Use MESH_INIT_CONFIG_DEFAULT() to initialize the default values, mesh IE is encrypted by default.

- Mesh network is established on a fixed channel (1-14).
- Mesh event callback is mandatory.
- Mesh ID is an identifier of an MBSS. Nodes with the same mesh ID can communicate with each other.
- Regarding to the router configuration, if the router is hidden, BSSID field is mandatory.

If BSSID field isn't set and there exists more than one router with same SSID, there is a risk that more roots than one connected with different BSSID will appear. It means more than one mesh network is established with the same mesh ID.

Root conflict function could eliminate redundant roots connected with the same BSSID, but couldn't handle roots connected with different BSSID. Because users might have such requirements of setting up routers with same SSID for the future replacement. But in that case, if the above situations happen, please make sure applications implement forward functions on the root to guarantee devices in different mesh networks can communicate with each other. max_connection of mesh softAP is limited by the max number of Wi-Fi softAP supported (max:10).

Attention This API shall be called before mesh is started after mesh is initialized.

Return

- ESP_OK
- ESP_ERR_MESH_ARGUMENT
- ESP_ERR_MESH_NOT_ALLOWED

Parameters

- `config`: pointer to mesh stack configuration

esp_err_t **esp_mesh_get_config**(*mesh_cfg_t* **config*)

Get mesh stack configuration.

Return

- ESP_OK
- ESP_ERR_MESH_ARGUMENT

Parameters

- `config`: pointer to mesh stack configuration

esp_err_t **esp_mesh_set_router**(**const** *mesh_router_t* **router*)

Get router configuration.

Attention This API is used to dynamically modify the router configuration after mesh is configured.

Return

- ESP_OK
- ESP_ERR_MESH_ARGUMENT

Parameters

- `router`: pointer to router configuration

esp_err_t **esp_mesh_get_router**(*mesh_router_t* **router*)

Get router configuration.

Return

- ESP_OK
- ESP_ERR_MESH_ARGUMENT

Parameters

- `router`: pointer to router configuration

esp_err_t **esp_mesh_set_id**(**const** *mesh_addr_t* **id*)

Set mesh network ID.

Attention This API is used to dynamically modify the mesh network ID.

Return

- ESP_OK
- ESP_ERR_MESH_ARGUMENT: invalid argument

Parameters

- `id`: pointer to mesh network ID

esp_err_t **esp_mesh_get_id**(*mesh_addr_t* **id*)

Get mesh network ID.

Return

- ESP_OK
- ESP_ERR_MESH_ARGUMENT

Parameters

- `id`: pointer to mesh network ID

esp_err_t **esp_mesh_set_type**(*mesh_type_t* *type*)

Designate device type over the mesh network.

- MESH_IDLE: designates a device as a self-organized node for a mesh network
- MESH_ROOT: designates the root node for a mesh network
- MESH_LEAF: designates a device as a standalone Wi-Fi station that connects to a parent
- MESH_STA: designates a device as a standalone Wi-Fi station that connects to a router

Return

- ESP_OK
- ESP_ERR_MESH_NOT_ALLOWED

Parameters

- `type`: device type

mesh_type_t **esp_mesh_get_type**(void)

Get device type over mesh network.

Attention This API shall be called after having received the event MESH_EVENT_PARENT_CONNECTED.

Return mesh type

esp_err_t **esp_mesh_set_max_layer**(int *max_layer*)

Set network max layer value (max:25, default:25)

- Network max layer limits the max hop count.

Attention This API shall be called before mesh is started.

Return

- ESP_OK
- ESP_ERR_MESH_ARGUMENT
- ESP_ERR_MESH_NOT_ALLOWED

Parameters

- `max_layer`: max layer value

int **esp_mesh_get_max_layer**(void)

Get max layer value.

Return max layer value

esp_err_t **esp_mesh_set_ap_password**(**const** uint8_t **pwd*, int *len*)

Set mesh softAP password.

Attention This API shall be called before mesh is started.

Return

- ESP_OK
- ESP_ERR_MESH_ARGUMENT
- ESP_ERR_MESH_NOT_ALLOWED

Parameters

- `pwd`: pointer to the password
- `len`: password length

esp_err_t **esp_mesh_set_ap_authmode**(*wifi_auth_mode_t authmode*)

Set mesh softAP authentication mode.

Attention This API shall be called before mesh is started.

Return

- ESP_OK
- ESP_ERR_MESH_ARGUMENT
- ESP_ERR_MESH_NOT_ALLOWED

Parameters

- `authmode`: authentication mode

wifi_auth_mode_t **esp_mesh_get_ap_authmode**(void)

Get mesh softAP authentication mode.

Return authentication mode

esp_err_t **esp_mesh_set_ap_connections**(int *connections*)

Set mesh softAP max connection value.

Attention This API shall be called before mesh is started.

Return

- ESP_OK
- ESP_ERR_MESH_ARGUMENT

Parameters

- `connections`: the number of max connections

int **esp_mesh_get_ap_connections**(void)

Get mesh softAP max connection configuration.

Return the number of max connections

int **esp_mesh_get_layer**(void)

Get current layer value over the mesh network.

Attention This API shall be called after having received the event MESH_EVENT_PARENT_CONNECTED.

Return layer value

esp_err_t **esp_mesh_get_parent_bssid**(*mesh_addr_t* **bssid*)

Get the parent BSSID.

Attention This API shall be called after having received the event MESH_EVENT_PARENT_CONNECTED.

Return

- ESP_OK
- ESP_FAIL

Parameters

- **bssid**: pointer to parent BSSID

bool **esp_mesh_is_root**(void)

Return whether the device is the root node of the network.

Return true/false

esp_err_t **esp_mesh_set_self_organized**(bool *enable*, bool *select_parent*)

Enable/disable self-organized networking.

- Self-organized networking has three main functions: select the root node; find a preferred parent; initiate reconnection if a disconnection is detected.
- Self-organized networking is enabled by default.
- If self-organized is disabled, users should set a parent for the device via esp_mesh_set_parent().

Attention This API is used to dynamically modify whether to enable the self organizing.

Return

- ESP_OK
- ESP_FAIL

Parameters

- `enable`: enable or disable self-organized networking
- `select_parent`: Only valid when self-organized networking is enabled.
  - if select_parent is set to true, the root will give up its mesh root status and search for a new parent like other non-root devices.

bool **esp_mesh_get_self_organized**(void)

Return whether enable self-organized networking or not.

Return true/false

esp_err_t **esp_mesh_waive_root**(**const** *mesh_vote_t* **vote*, int *reason*)

Cause the root device to give up (waive) its mesh root status.

- A device is elected root primarily based on RSSI from the external router.
- If external router conditions change, users can call this API to perform a root switch.
- In this API, users could specify a desired root address to replace itself or specify an attempts value to ask current root to initiate a new round of voting. During the voting, a better root candidate would be expected to find to replace the current one.
- If no desired root candidate, the vote will try a specified number of attempts (at least 15). If no better root candidate is found, keep the current one. If a better candidate is found, the new better one will send a root switch request to the current root, current root will respond with a root switch acknowledgment.
- After that, the new candidate will connect to the router to be a new root, the previous root will disconnect with the router and choose another parent instead.

Root switch is completed with minimal disruption to the whole mesh network.

Attention This API is only called by the root.

Return

- ESP_OK
- ESP_ERR_MESH_QUEUE_FULL
- ESP_ERR_MESH_DISCARD
- ESP_FAIL

Parameters

- `vote`: vote configuration
  - If this parameter is set NULL, the vote will perform the default 15 times.

  - Field percentage threshold is 0.9 by default.
  - Field is_rc_specified shall be false.
  - Field attempts shall be at least 15 times.
- `reason`: only accept MESH_VOTE_REASON_ROOT_INITIATED for now

esp_err_t **esp_mesh_set_vote_percentage**(float *percentage*)

Set vote percentage threshold for approval of being a root.

- During the networking, only obtaining vote percentage reaches this threshold, the device could be a root.

Attention This API shall be called before mesh is started.

Return

- ESP_OK
- ESP_FAIL

Parameters

- `percentage`: vote percentage threshold

float **esp_mesh_get_vote_percentage**(void)

Get vote percentage threshold for approval of being a root.

Return percentage threshold

esp_err_t **esp_mesh_set_ap_assoc_expire**(int *seconds*)

Set mesh softAP associate expired time (default:10 seconds)

- If mesh softAP hasn't received any data from an associated child within this time, mesh softAP will take this child inactive and disassociate it.
- If mesh softAP is encrypted, this value should be set a greater value, such as 30 seconds.

Return

- ESP_OK
- ESP_FAIL

Parameters

- `seconds`: the expired time

int **esp_mesh_get_ap_assoc_expire**(void)

Get mesh softAP associate expired time.

Return seconds

int **esp_mesh_get_total_node_num**(void)

Get total number of devices in current network (including the root)

Attention The returned value might be incorrect when the network is changing.

Return total number of devices (including the root)

int **esp_mesh_get_routing_table_size**(void)

Get the number of devices in this device' s sub-network (including self)

Return the number of devices over this device' s sub-network (including self)

esp_err_t **esp_mesh_get_routing_table**(*mesh_addr_t* **mac*, int *len*, int **size*)

Get routing table of this device' s sub-network (including itself)

Return

- ESP_OK
- ESP_ERR_MESH_ARGUMENT

Parameters

- `mac`: pointer to routing table
- `len`: routing table size(in bytes)
- `size`: pointer to the number of devices in routing table (including itself)

esp_err_t **esp_mesh_post_toDS_state**(bool *reachable*)

Post the toDS state to the mesh stack.

Attention This API is only for the root.

Return

- ESP_OK
- ESP_FAIL

Parameters

- `reachable`: this state represents whether the root is able to access external IP network

esp_err_t **esp_mesh_get_tx_pending**(*mesh_tx_pending_t* **pending*)

Return the number of packets pending in the queue waiting to be sent by the mesh stack.

Return

- ESP_OK

- ESP_FAIL

Parameters

- `pending`: pointer to the TX pending

esp_err_t **esp_mesh_get_rx_pending**(*mesh_rx_pending_t* **pending*)

Return the number of packets available in the queue waiting to be received by applications.

Return

- ESP_OK
- ESP_FAIL

Parameters

- `pending`: pointer to the RX pending

int **esp_mesh_available_txupQ_num**(**const** *mesh_addr_t* **addr*, uint32_t **xseqno_in*)

Return the number of packets could be accepted from the specified address.

Return the number of upQ for a certain address

Parameters

- `addr`: self address or an associate children address
- `xseqno_in`: sequence number of the last received packet from the specified address

esp_err_t **esp_mesh_set_xon_qsize**(int *qsize*)

Set the number of queue.

Attention This API shall be called before mesh is started.

Return

- ESP_OK
- ESP_FAIL

Parameters

- `qsize`: default:32 (min:16)

int **esp_mesh_get_xon_qsize**(void)

Get queue size.

Return the number of queue

esp_err_t **esp_mesh_allow_root_conflicts**(bool *allowed*)

Set whether allow more than one root existing in one network.

Return

- ESP_OK
- ESP_WIFI_ERR_NOT_INIT
- ESP_WIFI_ERR_NOT_START

Parameters

- `allowed`: allow or not

bool **esp_mesh_is_root_conflicts_allowed**(void)

Check whether allow more than one root to exist in one network.

Return true/false

esp_err_t **esp_mesh_set_group_id**(**const** *mesh_addr_t* **addr*, int *num*)

Set group ID addresses.

Return

- ESP_OK
- ESP_MESH_ERR_ARGUMENT

Parameters

- `addr`: pointer to new group ID addresses
- `num`: the number of group ID addresses

esp_err_t **esp_mesh_delete_group_id**(**const** *mesh_addr_t* **addr*, int *num*)

Delete group ID addresses.

Return

- ESP_OK
- ESP_MESH_ERR_ARGUMENT

Parameters

- `addr`: pointer to deleted group ID address
- `num`: the number of group ID addresses

int **esp_mesh_get_group_num**(void)

Get the number of group ID addresses.

Return the number of group ID addresses

esp_err_t **esp_mesh_get_group_list**(*mesh_addr_t* **addr*, int *num*)

Get group ID addresses.

Return

- ESP_OK
- ESP_MESH_ERR_ARGUMENT

Parameters

- **addr**: pointer to group ID addresses
- **num**: the number of group ID addresses

bool **esp_mesh_is_my_group**(**const** *mesh_addr_t* **addr*)

Check whether the specified group address is my group.

Return true/false

esp_err_t **esp_mesh_set_capacity_num**(int *num*)

Set mesh network capacity (max:1000, default:300)

Attention This API shall be called before mesh is started.

Return

- ESP_OK
- ESP_ERR_MESH_NOT_ALLOWED
- ESP_MESH_ERR_ARGUMENT

Parameters

- **num**: mesh network capacity

int **esp_mesh_get_capacity_num**(void)

Get mesh network capacity.

Return mesh network capacity

esp_err_t **esp_mesh_set_ie_crypto_funcs**(**const** mesh_crypto_funcs_t **crypto_funcs*)

Set mesh IE crypto functions.

Attention This API can be called at any time after mesh is initialized.

Return

- ESP_OK

Parameters

- `crypto_funcs`: crypto functions for mesh IE
  - If crypto_funcs is set to NULL, mesh IE is no longer encrypted.

esp_err_t **esp_mesh_set_ie_crypto_key**(**const** char ***key*, int *len*)

Set mesh IE crypto key.

Attention This API can be called at any time after mesh is initialized.

Return

- ESP_OK
- ESP_MESH_ERR_ARGUMENT

Parameters

- `key`: ASCII crypto key
- `len`: length in bytes, range:8~64

esp_err_t **esp_mesh_get_ie_crypto_key**(char ***key*, int *len*)

Get mesh IE crypto key.

Return

- ESP_OK
- ESP_MESH_ERR_ARGUMENT

Parameters

- `key`: ASCII crypto key
- `len`: length in bytes, range:8~64

esp_err_t **esp_mesh_set_root_healing_delay**(int *delay_ms*)

Set delay time before starting root healing.

Return

- ESP_OK

Parameters

- `delay_ms`: delay time in milliseconds

int **esp_mesh_get_root_healing_delay**(void)

Get delay time before network starts root healing.

Return delay time in milliseconds

esp_err_t **esp_mesh_set_event_cb**(**const** *mesh_event_cb_t event_cb*)

Set mesh event callback.

Return

- ESP_OK

Parameters

- `event_cb`: mesh event call back

esp_err_t **esp_mesh_fix_root**(bool *enable*)

Enable network Fixed Root Setting.

- Enabling fixed root disables automatic election of the root node via voting.
- All devices in the network shall use the same Fixed Root Setting (enabled or disabled).
- If Fixed Root is enabled, users should make sure a root node is designated for the network.

Return

- ESP_OK

Parameters

- `enable`: enable or not

bool **esp_mesh_is_root_fixed**(void)

Check whether network Fixed Root Setting is enabled.

- Enable/disable network Fixed Root Setting by API esp_mesh_fix_root().
- Network Fixed Root Setting also changes with the "flag" value in parent networking IE.

Return true/false

esp_err_t **esp_mesh_set_parent**(**const** *wifi_config_t* **parent*, **const** *mesh_addr_t* **parent_mesh_id*, *mesh_type_t my_type*, int *my_layer*)

Set a specified parent for the device.

Attention This API can be called at any time after mesh is configured.

Return

- ESP_OK
- ESP_ERR_ARGUMENT
- ESP_ERR_MESH_NOT_CONFIG

Parameters

- `parent`: parent configuration, the SSID and the channel of the parent are mandatory.
  - If the BSSID is set, make sure that the SSID and BSSID represent the same parent, otherwise the device will never find this specified parent.
- `parent_mesh_id`: parent mesh ID,
  - If this value is not set, the original mesh ID is used.
- `my_type`: mesh type
  - If the parent set for the device is the same as the router in the network configuration, then my_type shall set MESH_ROOT and my_layer shall set MESH_ROOT_LAYER.
- `my_layer`: mesh layer
  - my_layer of the device may change after joining the network.
  - If my_type is set MESH_NODE, my_layer shall be greater than MESH_ROOT_LAYER.
  - If my_type is set MESH_LEAF, the device becomes a standalone Wi-Fi station and no longer has the ability to extend the network.

esp_err_t **esp_mesh_scan_get_ap_ie_len**(int **len*)

Get mesh networking IE length of one AP.

Return

- ESP_OK
- ESP_ERR_WIFI_NOT_INIT
- ESP_ERR_WIFI_ARG
- ESP_ERR_WIFI_FAIL

Parameters

- `len`: mesh networking IE length

esp_err_t **esp_mesh_scan_get_ap_record**(*wifi_ap_record_t *ap_record*, void **buffer*)

Get AP record.

Attention Different from esp_wifi_scan_get_ap_records(), this API only gets one of APs scanned each time. See "manual_networking" example.

Return

- ESP_OK
- ESP_ERR_WIFI_NOT_INIT
- ESP_ERR_WIFI_ARG

- ESP_ERR_WIFI_FAIL

Parameters

- `ap_record`: pointer to one AP record
- `buffer`: pointer to the mesh networking IE of this AP

esp_err_t **esp_mesh_flush_upstream_packets**(void)

Flush upstream packets pending in to_parent queue and to_parent_p2p queue.

Return

- ESP_OK

esp_err_t **esp_mesh_get_subnet_nodes_num**(const *mesh_addr_t* **child_mac*, int **nodes_num*)

Get the number of nodes in the subnet of a specific child.

Return

- ESP_OK
- ESP_ERR_MESH_NOT_START
- ESP_ERR_MESH_ARGUMENT

Parameters

- `child_mac`: an associated child address of this device
- `nodes_num`: pointer to the number of nodes in the subnet of a specific child

esp_err_t **esp_mesh_get_subnet_nodes_list**(const *mesh_addr_t* **child_mac*, *mesh_addr_t* **nodes*, int *nodes_num*)

Get nodes in the subnet of a specific child.

Return

- ESP_OK
- ESP_ERR_MESH_NOT_START
- ESP_ERR_MESH_ARGUMENT

Parameters

- `child_mac`: an associated child address of this device
- `nodes`: pointer to nodes in the subnet of a specific child
- `nodes_num`: the number of nodes in the subnet of a specific child

esp_err_t **esp_mesh_disconnect**(void)

Disconnect from current parent.

Return

- ESP_OK

esp_err_t **esp_mesh_connect**(void)

Connect to current parent.

Return

- ESP_OK

esp_err_t **esp_mesh_flush_scan_result**(void)

Flush scan result.

Return

- ESP_OK

esp_err_t **esp_mesh_switch_channel**(**const** uint8_t **new_bssid*, int *csa_newchan*, int *csa_count*)

Cause the root device to add Channel Switch Announcement Element (CSA IE) to beacon.

- Set the new channel
- Set how many beacons with CSA IE will be sent before changing a new channel
- Enable the channel switch function

Attention This API is only called by the root.

Return

- ESP_OK

Parameters

- `new_bssid`: the new router BSSID if the router changes
- `csa_newchan`: the new channel number to which the whole network is moving
- `csa_count`: channel switch period(beacon count), unit is based on beacon interval of its softAP, the default value is 15.

esp_err_t **esp_mesh_get_router_bssid**(uint8_t **router_bssid*)

Get the router BSSID.

Return

- ESP_OK
- ESP_ERR_WIFI_NOT_INIT
- ESP_ERR_WIFI_ARG

Parameters

- `router_bssid`: pointer to the router BSSID

int64_t **esp_mesh_get_tsf_time**(void)

Get the TSF time.

Return the TSF time

Unions

union mesh_addr_t

#include <esp_mesh.h> Mesh address.

Public Members

uint8_t **addr**[6]

mac address

mip_t **mip**

mip address

union mesh_event_info_t

#include <esp_mesh.h> Mesh event information.

Public Members

mesh_event_channel_switch_t **channel_switch**

channel switch

mesh_event_child_connected_t **child_connected**

child connected

mesh_event_child_disconnected_t **child_disconnected**

child disconnected

mesh_event_routing_table_change_t **routing_table**

routing table change

mesh_event_connected_t **connected**

parent connected

mesh_event_disconnected_t **disconnected**

parent disconnected

mesh_event_no_parent_found_t **no_parent**

no parent found

mesh_event_layer_change_t **layer_change**
: layer change

mesh_event_toDS_state_t **toDS_state**
: toDS state, devices shall check this state firstly before trying to send packets to external IP network. This state indicates right now whether the root is capable of sending packets out. If not, devices had better to wait until this state changes to be MESH_TODS_REACHABLE.

mesh_event_vote_started_t **vote_started**
: vote started

mesh_event_root_got_ip_t **got_ip**
: root obtains IP address

mesh_event_root_address_t **root_addr**
: root address

mesh_event_root_switch_req_t **switch_req**
: root switch request

mesh_event_root_conflict_t **root_conflict**
: other powerful root

mesh_event_root_fixed_t **root_fixed**
: fixed root

mesh_event_scan_done_t **scan_done**
: scan done

mesh_event_network_state_t **network_state**
: network state, such as whether current mesh network has a root.

mesh_event_find_network_t **find_network**
: network found that can join

mesh_event_router_switch_t **router_switch**
: new router information

union mesh_rc_config_t
: *#include <esp_mesh.h>* Vote address configuration.

Public Members

int **attempts**
: max vote attempts before a new root is elected automatically by mesh network. (min:15, 15 by default)

mesh_addr_t **rc_addr**
: a new root address specified by users for API esp_mesh_waive_root()

Structures

struct mip_t

IP address and port.

Public Members

ip4_addr_t **ip4**

IP address

uint16_t **port**

port

struct mesh_event_channel_switch_t

Channel switch information.

Public Members

uint8_t **channel**

new channel

struct mesh_event_connected_t

Parent connected information.

Public Members

system_event_sta_connected_t **connected**

parent information, same as Wi-Fi event SYSTEM_EVENT_STA_CONNECTED does

uint8_t **self_layer**

layer

struct mesh_event_no_parent_found_t

No parent found information.

Public Members

int **scan_times**

scan times being through

struct mesh_event_layer_change_t

Layer change information.

Public Members

uint8_t **new_layer**
: new layer

struct mesh_event_vote_started_t
: vote started information

Public Members

int **reason**
: vote reason, vote could be initiated by children or by the root itself

int **attempts**
: max vote attempts before stopped

mesh_addr_t **rc_addr**
: root address specified by users via API esp_mesh_waive_root()

struct mesh_event_find_network_t
: find a mesh network that this device can join

Public Members

uint8_t **channel**
: channel number of the new found network

uint8_t **router_bssid**[6]
: router BSSID

struct mesh_event_root_switch_req_t
: Root switch request information.

Public Members

int **reason**
: root switch reason, generally root switch is initialized by users via API esp_mesh_waive_root()

mesh_addr_t **rc_addr**
: the address of root switch requester

struct mesh_event_root_conflict_t
: Other powerful root address.

Public Members

int8_t **rssi**
: rssi with router

uint16_t **capacity**
: the number of devices in current network

uint8_t **addr**[6]
: other powerful root address

struct mesh_event_routing_table_change_t
: Routing table change.

Public Members

uint16_t **rt_size_new**
: the new value

uint16_t **rt_size_change**
: the changed value

struct mesh_event_root_fixed_t
: Root fixed.

Public Members

bool **is_fixed**
: status

struct mesh_event_scan_done_t
: Scan done event information.

Public Members

uint8_t **number**
: the number of APs scanned

struct mesh_event_network_state_t
: Network state information.

Public Members

bool **is_rootless**
: whether current mesh network has a root

struct mesh_event_t

Mesh event.

Public Members

mesh_event_id_t **id**

mesh event id

mesh_event_info_t **info**

mesh event info

struct mesh_opt_t

Mesh option.

Public Members

uint8_t **type**

option type

uint16_t **len**

option length

uint8_t ***val**

option value

struct mesh_data_t

Mesh data for esp_mesh_send() and esp_mesh_recv()

Public Members

uint8_t ***data**

data

uint16_t **size**

data size

mesh_proto_t **proto**

data protocol

mesh_tos_t **tos**

data type of service

struct mesh_router_t

Router configuration.

Public Members

uint8_t **ssid**[32]
SSID

uint8_t **ssid_len**
length of SSID

uint8_t **bssid**[6]
BSSID, if this value is specified, users should also specify "allow_router_switch".

uint8_t **password**[64]
password

bool **allow_router_switch**
if the BSSID is specified and this value is also set, when the router of this specified BSSID fails to be found after "fail" (mesh_attempts_t) times, the whole network is allowed to switch to another router with the same SSID. The new router might also be on a different channel. The default value is false. There is a risk that if the password is different between the new switched router and the previous one, the mesh network could be established but the root will never connect to the new switched router.

struct mesh_ap_cfg_t
Mesh softAP configuration.

Public Members

uint8_t **password**[64]
mesh softAP password

uint8_t **max_connection**
max number of stations allowed to connect in, max 10

struct mesh_cfg_t
Mesh initialization configuration.

Public Members

uint8_t **channel**
channel, the mesh network on

bool **allow_channel_switch**
if this value is set, when "fail" (mesh_attempts_t) times is reached, device will change to a full channel scan for a network that could join. The default value is false.

mesh_event_cb_t **event_cb**
mesh event callback

mesh_addr_t **mesh_id**
mesh network identification

mesh_router_t **router**
router configuration

mesh_ap_cfg_t **mesh_ap**
mesh softAP configuration

const mesh_crypto_funcs_t ***crypto_funcs**
crypto functions

struct mesh_vote_t
Vote.

Public Members

float **percentage**
vote percentage threshold for approval of being a root

bool **is_rc_specified**
if true, rc_addr shall be specified (Unimplemented). if false, attempts value shall be specified to make network start root election.

mesh_rc_config_t **config**
vote address configuration

struct mesh_tx_pending_t
The number of packets pending in the queue waiting to be sent by the mesh stack.

Public Members

int **to_parent**
to parent queue

int **to_parent_p2p**
to parent (P2P) queue

int **to_child**
to child queue

int **to_child_p2p**
to child (P2P) queue

int **mgmt**
management queue

int **broadcast**
broadcast and multicast queue

`struct mesh_rx_pending_t`

The number of packets available in the queue waiting to be received by applications.

Public Members

int `toDS`

to external DS

int `toSelf`

to self

Macros

`MESH_ROOT_LAYER`

root layer value

`MESH_MTU`

max transmit unit(in bytes)

`MESH_MPS`

max payload size(in bytes)

`ESP_ERR_MESH_WIFI_NOT_START`

Mesh error code definition.

Wi-Fi isn't started

`ESP_ERR_MESH_NOT_INIT`

mesh isn't initialized

`ESP_ERR_MESH_NOT_CONFIG`

mesh isn't configured

`ESP_ERR_MESH_NOT_START`

mesh isn't started

`ESP_ERR_MESH_NOT_SUPPORT`

not supported yet

`ESP_ERR_MESH_NOT_ALLOWED`

operation is not allowed

`ESP_ERR_MESH_NO_MEMORY`

out of memory

`ESP_ERR_MESH_ARGUMENT`

illegal argument

ESP_ERR_MESH_EXCEED_MTU
: packet size exceeds MTU

ESP_ERR_MESH_TIMEOUT
: timeout

ESP_ERR_MESH_DISCONNECTED
: disconnected with parent on station interface

ESP_ERR_MESH_QUEUE_FAIL
: queue fail

ESP_ERR_MESH_QUEUE_FULL
: queue full

ESP_ERR_MESH_NO_PARENT_FOUND
: no parent found to join the mesh network

ESP_ERR_MESH_NO_ROUTE_FOUND
: no route found to forward the packet

ESP_ERR_MESH_OPTION_NULL
: no option found

ESP_ERR_MESH_OPTION_UNKNOWN
: unknown option

ESP_ERR_MESH_XON_NO_WINDOW
: no window for software flow control on upstream

ESP_ERR_MESH_INTERFACE
: low-level Wi-Fi interface error

ESP_ERR_MESH_DISCARD_DUPLICATE
: discard the packet due to the duplicate sequence number

ESP_ERR_MESH_DISCARD
: discard the packet

ESP_ERR_MESH_VOTING
: vote in progress

ESP_ERR_MESH_XMIT
: XMIT

ESP_ERR_MESH_QUEUE_READ
: error in reading queue

ESP_ERR_MESH_RECV_RELEASE
: release esp_mesh_recv_toDS

MESH_DATA_ENC
: Flags bitmap for esp_mesh_send() and esp_mesh_recv()

  data encrypted (Unimplemented)

MESH_DATA_P2P
: point-to-point delivery over the mesh network

MESH_DATA_FROMDS
: receive from external IP network

MESH_DATA_TODS
: identify this packet is target to external IP network

MESH_DATA_NONBLOCK
: esp_mesh_send() non-block

MESH_DATA_DROP
: in the situation of the root having been changed, identify this packet can be dropped by new root

MESH_DATA_GROUP
: identify this packet is target to a group address

MESH_OPT_SEND_GROUP
: Option definitions for esp_mesh_send() and esp_mesh_recv()

  data transmission by group; used with esp_mesh_send() and shall have payload

MESH_OPT_RECV_DS_ADDR
: return a remote IP address; used with esp_mesh_send() and esp_mesh_recv()

MESH_ASSOC_FLAG_VOTE_IN_PROGRESS
: Flag of mesh networking IE.

  vote in progress

MESH_ASSOC_FLAG_NETWORK_FREE
: no root in current network

MESH_ASSOC_FLAG_ROOTS_FOUND
: root conflict is found

MESH_ASSOC_FLAG_ROOT_FIXED
: fixed root

MESH_INIT_CONFIG_DEFAULT()

Type Definitions

typedef system_event_sta_got_ip_t **mesh_event_root_got_ip_t**
: IP settings from LwIP stack.

typedef *mesh_addr_t* **mesh_event_root_address_t**

Root address.

typedef system_event_sta_disconnected_t **mesh_event_disconnected_t**

Parent disconnected information.

typedef system_event_ap_staconnected_t **mesh_event_child_connected_t**

Child connected information.

typedef system_event_ap_stadisconnected_t **mesh_event_child_disconnected_t**

Child disconnected information.

typedef system_event_sta_connected_t **mesh_event_router_switch_t**

New router information.

typedef void (***mesh_event_cb_t**)(*mesh_event_t* event)

Mesh event callback handler prototype definition.

Parameters

- `event`: *mesh_event_t*

Enumerations

enum mesh_event_id_t

Enumerated list of mesh event id.

Values:

MESH_EVENT_STARTED

mesh is started

MESH_EVENT_STOPPED

mesh is stopped

MESH_EVENT_CHANNEL_SWITCH

channel switch

MESH_EVENT_CHILD_CONNECTED

a child is connected on softAP interface

MESH_EVENT_CHILD_DISCONNECTED

a child is disconnected on softAP interface

MESH_EVENT_ROUTING_TABLE_ADD

routing table is changed by adding newly joined children

MESH_EVENT_ROUTING_TABLE_REMOVE

routing table is changed by removing leave children

`MESH_EVENT_PARENT_CONNECTED`
: parent is connected on station interface

`MESH_EVENT_PARENT_DISCONNECTED`
: parent is disconnected on station interface

`MESH_EVENT_NO_PARENT_FOUND`
: no parent found

`MESH_EVENT_LAYER_CHANGE`
: layer changes over the mesh network

`MESH_EVENT_TODS_STATE`
: state represents whether the root is able to access external IP network

`MESH_EVENT_VOTE_STARTED`
: the process of voting a new root is started either by children or by the root

`MESH_EVENT_VOTE_STOPPED`
: the process of voting a new root is stopped

`MESH_EVENT_ROOT_ADDRESS`
: the root address is obtained. It is posted by mesh stack automatically.

`MESH_EVENT_ROOT_SWITCH_REQ`
: root switch request sent from a new voted root candidate

`MESH_EVENT_ROOT_SWITCH_ACK`
: root switch acknowledgment responds the above request sent from current root

`MESH_EVENT_ROOT_GOT_IP`
: the root obtains the IP address. It is posted by LwIP stack automatically

`MESH_EVENT_ROOT_LOST_IP`
: the root loses the IP address. It is posted by LwIP stack automatically

`MESH_EVENT_ROOT_ASKED_YIELD`
: the root is asked yield by a more powerful existing root. If self organized is disabled and this device is specified to be a root by users, users should set a new parent for this device. if self organized is enabled, this device will find a new parent by itself, users could ignore this event.

`MESH_EVENT_ROOT_FIXED`
: when devices join a network, if the setting of Fixed Root for one device is different from that of its parent, the device will update the setting the same as its parent' s. Fixed Root Setting of each device is variable as that setting changes of the root.

`MESH_EVENT_SCAN_DONE`
: if self-organized networking is disabled, user can call esp_wifi_scan_start() to trigger this event, and add the corresponding scan done handler in this event.

MESH_EVENT_NETWORK_STATE
: network state, such as whether current mesh network has a root.

MESH_EVENT_STOP_RECONNECTION
: the root stops reconnecting to the router and non-root devices stop reconnecting to their parents.

MESH_EVENT_FIND_NETWORK
: when the channel field in mesh configuration is set to zero, mesh stack will perform a full channel scan to find a mesh network that can join, and return the channel value after finding it.

MESH_EVENT_ROUTER_SWITCH
: if users specify BSSID of the router in mesh configuration, when the root connects to another router with the same SSID, this event will be posted and the new router information is attached.

MESH_EVENT_MAX

enum mesh_type_t
: Device type.

Values:

MESH_IDLE
: hasn't joined the mesh network yet

MESH_ROOT
: the only sink of the mesh network. Has the ability to access external IP network

MESH_NODE
: intermediate device. Has the ability to forward packets over the mesh network

MESH_LEAF
: has no forwarding ability

MESH_STA
: connect to router with a standlone Wi-Fi station mode, no network expansion capability

enum mesh_proto_t
: Protocol of transmitted application data.

Values:

MESH_PROTO_BIN
: binary

MESH_PROTO_HTTP
: HTTP protocol

MESH_PROTO_JSON
: JSON format

MESH_PROTO_MQTT
: MQTT protocol

enum mesh_tos_t

For reliable transmission, mesh stack provides three type of services.

Values:

MESH_TOS_P2P

provide P2P (point-to-point) retransmission on mesh stack by default

MESH_TOS_E2E

provide E2E (end-to-end) retransmission on mesh stack (Unimplemented)

MESH_TOS_DEF

no retransmission on mesh stack

enum mesh_vote_reason_t

Vote reason.

Values:

MESH_VOTE_REASON_ROOT_INITIATED = 1

vote is initiated by the root

MESH_VOTE_REASON_CHILD_INITIATED

vote is initiated by children

enum mesh_disconnect_reason_t

Mesh disconnect reason code.

Values:

MESH_REASON_CYCLIC = 100

cyclic is detected

MESH_REASON_PARENT_IDLE

parent is idle

MESH_REASON_LEAF

the connected device is changed to a leaf

MESH_REASON_DIFF_ID

in different mesh ID

MESH_REASON_ROOTS

root conflict is detected

MESH_REASON_PARENT_STOPPED

parent has stopped the mesh

MESH_REASON_SCAN_FAIL

scan fail

MESH_REASON_IE_UNKNOWN

unknown IE

`MESH_REASON_WAIVE_ROOT`
waive root

`MESH_REASON_PARENT_WORSE`
parent with very poor RSSI

`MESH_REASON_EMPTY_PASSWORD`
use an empty password to connect to an encrypted parent

`MESH_REASON_PARENT_UNENCRYPTED`
connect to an unencrypted parent/router

`enum mesh_event_toDS_state_t`
The reachability of the root to a DS (distribute system)

Values:

`MESH_TODS_UNREACHABLE`
the root isn’ t able to access external IP network

`MESH_TODS_REACHABLE`
the root is able to access external IP network

Example code for the Wi-Fi API is provided in wifi directory of ESP-IDF examples.

Example code for ESP Mesh is provided in mesh directory of ESP-IDF examples.

3.2.2 Ethernet

Ethernet

Application Example

- Ethernet basic example: ethernet/ethernet.
- Ethernet iperf example: ethernet/iperf.

PHY Interfaces

The configured PHY model(s) are set in software by configuring the eth_config_t structure for the given PHY.

Headers include a default configuration structure. These default configurations will need some members overriden or re-set before they can be used for a particular PHY hardware configuration. Consult the Ethernet example to see how this is done.

- ethernet/include/eth_phy/phy.h (common)
- ethernet/include/eth_phy/phy_tlk110.h

- ethernet/include/eth_phy/phy_lan8720.h
- ethernet/include/eth_phy/phy_ip101.h

PHY Configuration Constants

`const` *eth_config_t* **phy_tlk110_default_ethernet_config**

Default TLK110 PHY configuration.

Note This configuration is not suitable for use as-is, it will need to be modified for your particular PHY hardware setup.

`const` *eth_config_t* **phy_lan8720_default_ethernet_config**

Default LAN8720 PHY configuration.

Note This configuration is not suitable for use as-is, it will need to be modified for your particular PHY hardware setup.

`const` *eth_config_t* **phy_ip101_default_ethernet_config**

Default IP101 PHY configuration.

Note This configuration is not suitable for use as-is, it will need to be modified for your particular PHY hardware setup.

API Reference - Ethernet

Header File

- ethernet/include/esp_eth.h

Functions

esp_err_t **esp_eth_init**(*eth_config_t* **config*)

Init ethernet mac.

Note config can not be NULL, and phy chip must be suitable to phy init func.

Return

- ESP_OK
- ESP_FAIL

Parameters

- `config`: mac init data.

esp_err_t **esp_eth_deinit**(void)

Deinit ethernet mac.

Return

- ESP_OK
- ESP_FAIL
- ESP_ERR_INVALID_STATE

esp_err_t **esp_eth_init_internal**(*eth_config_t* **config*)

Init Ethernet mac driver only.

For the most part, you need not call this function directly. It gets called from esp_eth_init().

This function may be called, if you only need to initialize the Ethernet driver without having to use the network stack on top.

Note config can not be NULL, and phy chip must be suitable to phy init func.

Return

- ESP_OK
- ESP_FAIL

Parameters

- `config`: mac init data.

esp_err_t **esp_eth_tx**(uint8_t **buf*, uint16_t *size*)

Send packet from tcp/ip to mac.

Note buf can not be NULL, size must be less than 1580

Return

- ESP_OK
- ESP_FAIL

Parameters

- `buf`: start address of packet data.
- `size`: size (byte) of packet data.

esp_err_t **esp_eth_enable**(void)

Enable ethernet interface.

Note Should be called after esp_eth_init

Return

- ESP_OK
- ESP_FAIL

esp_err_t **esp_eth_disable**(void)

Disable ethernet interface.

Note Should be called after esp_eth_init

Return

- ESP_OK
- ESP_FAIL

void **esp_eth_get_mac**(uint8_t *mac*[6])

Get mac addr.

Note mac addr must be a valid unicast address

Parameters

- `mac`: start address of mac address.

void **esp_eth_smi_write**(uint32_t *reg_num*, uint16_t *value*)

Write PHY reg with SMI interface.

Note PHY base addr must be right.

Parameters

- `reg_num`: PHY reg num.
- `value`: value which is written to PHY reg.

uint16_t **esp_eth_smi_read**(uint32_t *reg_num*)

Read PHY reg with SMI interface.

Note PHY base addr must be right.

Return value that is read from PHY reg

Parameters

- `reg_num`: PHY reg num.

esp_err_t **esp_eth_smi_wait_value**(uint32_t *reg_num*, uint16_t *value*, uint16_t *value_mask*, int *timeout_ms*)

Continuously read a PHY register over SMI interface, wait until the register has the desired value.

Note PHY base address must be right.

Return ESP_OK if desired value matches, ESP_ERR_TIMEOUT if timed out.

Parameters

- `reg_num`: PHY register number
- `value`: Value to wait for (masked with value_mask)
- `value_mask`: Mask of bits to match in the register.
- `timeout_ms`: Timeout to wait for this value (milliseconds). 0 means never timeout.

`static` *esp_err_t* **esp_eth_smi_wait_set**(uint32_t *reg_num*, uint16_t *value_mask*, int *timeout_ms*)

Continuously read a PHY register over SMI interface, wait until the register has all bits in a mask set.

Note PHY base address must be right.

Return ESP_OK if desired value matches, ESP_ERR_TIMEOUT if timed out.

Parameters

- `reg_num`: PHY register number
- `value_mask`: Value mask to wait for (all bits in this mask must be set)
- `timeout_ms`: Timeout to wait for this value (milliseconds). 0 means never timeout.

void **esp_eth_free_rx_buf**(void **buf*)

Free emac rx buf.

Note buf can not be null, and it is tcpip input buf.

Parameters

- `buf`: start address of received packet data.

esp_err_t **esp_eth_set_mac**(`const` uint8_t *mac*[6])

Set mac of ethernet interface.

Note user can call this function after emac_init, and the new mac address will be enabled after emac_enable.

Return

- ESP_OK: succeed
- ESP_ERR_INVALID_MAC: invalid mac address

Parameters

- `mac`: the Mac address.

eth_speed_mode_t **esp_eth_get_speed**(void)

Get Ethernet link speed.

Return eth_speed_mode_t ETH_SPEED_MODE_10M when link speed is 10Mbps ETH_SPEED_MODE_100M when link speed is 100Mbps

Structures

struct eth_config_t

ethernet configuration

Public Members

eth_phy_base_t **phy_addr**

PHY address (0~31)

eth_mode_t **mac_mode**

MAC mode: only support RMII now

eth_clock_mode_t **clock_mode**

external/internal clock mode selection

eth_tcpip_input_func **tcpip_input**

tcpip input func

eth_phy_func **phy_init**

phy init func

eth_phy_check_link_func **phy_check_link**

phy check link func

eth_phy_check_init_func **phy_check_init**

phy check init func

eth_phy_get_speed_mode_func **phy_get_speed_mode**

phy check init func

eth_phy_get_duplex_mode_func **phy_get_duplex_mode**

phy check init func

eth_gpio_config_func **gpio_config**

gpio config func

bool **flow_ctrl_enable**

flag of flow ctrl enable

eth_phy_get_partner_pause_enable_func **phy_get_partner_pause_enable**

get partner pause enable

eth_phy_power_enable_func **phy_power_enable**
enable or disable phy power

uint32_t **reset_timeout_ms**
timeout value for reset emac

bool **promiscuous_enable**
set true to enable promiscuous mode

Type Definitions

typedef bool (***eth_phy_check_link_func**)(void)

typedef void (***eth_phy_check_init_func**)(void)

typedef *eth_speed_mode_t* (***eth_phy_get_speed_mode_func**)(void)

typedef *eth_duplex_mode_t* (***eth_phy_get_duplex_mode_func**)(void)

typedef *esp_err_t* (***eth_phy_func**)(void)

typedef *esp_err_t* (***eth_tcpip_input_func**)(void *buffer, uint16_t len, void *eb)

typedef void (***eth_gpio_config_func**)(void)

typedef bool (***eth_phy_get_partner_pause_enable_func**)(void)

typedef void (***eth_phy_power_enable_func**)(bool enable)

Enumerations

enum eth_mode_t
Ethernet interface mode.

Values:

ETH_MODE_RMII = 0
RMII mode

ETH_MODE_MII
MII mode

enum eth_clock_mode_t
Ethernet clock mode.

Values:

ETH_CLOCK_GPIO0_IN = 0
RMII clock input to GPIO0

`ETH_CLOCK_GPIO0_OUT` = 1
RMII clock output from GPIO0

`ETH_CLOCK_GPIO16_OUT` = 2
RMII clock output from GPIO16

`ETH_CLOCK_GPIO17_OUT` = 3
RMII clock output from GPIO17

enum eth_speed_mode_t
Ethernet Speed.

Values:

`ETH_SPEED_MODE_10M` = 0
Ethernet speed: 10Mbps

`ETH_SPEED_MODE_100M`
Ethernet speed: 100Mbps

enum eth_duplex_mode_t
Ethernet Duplex.

Values:

`ETH_MODE_HALFDUPLEX` = 0
Ethernet half duplex

`ETH_MODE_FULLDUPLEX`
Ethernet full duplex

enum eth_phy_base_t
Ethernet PHY address.

Values:

`PHY0` = 0
PHY address 0

`PHY1`
PHY address 1

`PHY2`
PHY address 2

`PHY3`
PHY address 3

`PHY4`
PHY address 4

`PHY5`
PHY address 5

`PHY6`
: PHY address 6

`PHY7`
: PHY address 7

`PHY8`
: PHY address 8

`PHY9`
: PHY address 9

`PHY10`
: PHY address 10

`PHY11`
: PHY address 11

`PHY12`
: PHY address 12

`PHY13`
: PHY address 13

`PHY14`
: PHY address 14

`PHY15`
: PHY address 15

`PHY16`
: PHY address 16

`PHY17`
: PHY address 17

`PHY18`
: PHY address 18

`PHY19`
: PHY address 19

`PHY20`
: PHY address 20

`PHY21`
: PHY address 21

`PHY22`
: PHY address 22

`PHY23`
: PHY address 23

`PHY24`
: PHY address 24

`PHY25`
: PHY address 25

`PHY26`
: PHY address 26

`PHY27`
: PHY address 27

`PHY28`
: PHY address 28

`PHY29`
: PHY address 29

`PHY30`
: PHY address 30

`PHY31`
: PHY address 31

API Reference - PHY Common

Header File

- ethernet/include/eth_phy/phy.h

Functions

void **phy_rmii_configure_data_interface_pins**(void)
: Common PHY-management functions.

  Note These are not enough to drive any particular Ethernet PHY. They provide a common configuration structure and management functions. Configure fixed pins for RMII data interface.

  Note This configures GPIOs 0, 19, 22, 25, 26, 27 for use with RMII data interface. These pins cannot be changed, and must be wired to ethernet functions. This is not sufficient to fully configure the Ethernet PHY. MDIO configuration interface pins (such as SMI MDC, MDO, MDI) must also be configured correctly in the GPIO matrix.

void **phy_rmii_smi_configure_pins**(uint8_t *mdc_gpio*, uint8_t *mdio_gpio*)

Configure variable pins for SMI ethernet functions.

Note Calling this function along with mii_configure_default_pins() will fully configure the GPIOs for the ethernet PHY.

Parameters

- `mdc_gpio`: MDC GPIO Pin number
- `mdio_gpio`: MDIO GPIO Pin number

void **phy_mii_enable_flow_ctrl**(void)

Enable flow control in standard PHY MII register.

bool **phy_mii_check_link_status**(void)

Check Ethernet link status via MII interface.

Return true Link is on

Return false Link is off

bool **phy_mii_get_partner_pause_enable**(void)

Check pause frame ability of partner via MII interface.

Return true Partner is able to process pause frame

Return false Partner can not process pause frame

API Reference - PHY TLK110

Header File

- ethernet/include/eth_phy/phy_tlk110.h

Functions

void **phy_tlk110_dump_registers**()

Dump TLK110 PHY SMI configuration registers.

void **phy_tlk110_check_phy_init**(void)

Default TLK110 phy_check_init function.

eth_speed_mode_t **phy_tlk110_get_speed_mode**(void)

Default TLK110 phy_get_speed_mode function.

Return eth_speed_mode_t Ethernet speed mode

eth_duplex_mode_t **phy_tlk110_get_duplex_mode**(void)
Default TLK110 phy_get_duplex_mode function.

Return eth_duplex_mode_t Ethernet duplex mode

void **phy_tlk110_power_enable**(bool)
Default TLK110 phy_power_enable function.

esp_err_t **phy_tlk110_init**(void)
Default TLK110 phy_init function.

Return esp_err_t

- ESP_OK on success
- ESP_FAIL on error

API Reference - PHY LAN8720

Header File

- ethernet/include/eth_phy/phy_lan8720.h

Functions

void **phy_lan8720_dump_registers**()
Dump LAN8720 PHY SMI configuration registers.

void **phy_lan8720_check_phy_init**(void)
Default LAN8720 phy_check_init function.

eth_speed_mode_t **phy_lan8720_get_speed_mode**(void)
Default LAN8720 phy_get_speed_mode function.

Return eth_speed_mode_t Ethernet speed mode

eth_duplex_mode_t **phy_lan8720_get_duplex_mode**(void)
Default LAN8720 phy_get_duplex_mode function.

Return eth_duplex_mode_t Ethernet duplex mode

void **phy_lan8720_power_enable**(bool)
Default LAN8720 phy_power_enable function.

esp_err_t **phy_lan8720_init**(void)
Default LAN8720 phy_init function.

Return esp_err_t

- ESP_OK on success
- ESP_FAIL on error

API Reference - PHY IP101

Header File

- ethernet/include/eth_phy/phy_ip101.h

Functions

void **phy_ip101_dump_registers**()
Dump IP101 PHY SMI configuration registers.

void **phy_ip101_check_phy_init**(void)
Default IP101 phy_check_init function.

eth_speed_mode_t **phy_ip101_get_speed_mode**(void)
Default IP101 phy_get_speed_mode function.

Return eth_speed_mode_t Ethernet speed mode

eth_duplex_mode_t **phy_ip101_get_duplex_mode**(void)
Default IP101 phy_get_duplex_mode function.

Return eth_duplex_mode_t Ethernet duplex mode

void **phy_ip101_power_enable**(bool)
Default IP101 phy_power_enable function.

esp_err_t **phy_ip101_init**(void)
Default IP101 phy_init function.

Return esp_err_t

- ESP_OK on success
- ESP_FAIL on error

Example code for the Ethernet API is provided in ethernet directory of ESP-IDF examples.

3.2.3 IP Network Layer

TCP/IP Adapter

The purpose of TCP/IP Adapter library is twofold:

- It provides an abstraction layer for the application on top of the TCP/IP stack. This will allow applications to choose between IP stacks in the future.
- The APIs it provides are thread safe, even if the underlying TCP/IP stack APIs are not.

ESP-IDF currently implements TCP/IP Adapter for the lwIP TCP/IP stack only. However, the adapter itself is TCP/IP implementation agnostic and different implementations are possible.

Some TCP/IP Adapter API functions are intended to be called by application code, for example to get/set interface IP addresses, configure DHCP. Other functions are intended for internal ESP-IDF use by the network driver layer.

In many cases, applications do not need to call TCP/IP Adapter APIs directly as they are called from the default network event handlers.

API Reference

Header File

- tcpip_adapter/include/tcpip_adapter.h

Functions

void **tcpip_adapter_init**(void)

Initialize the underlying TCP/IP stack.

Note This function should be called exactly once from application code, when the application starts up.

esp_err_t **tcpip_adapter_eth_start**(uint8_t *mac, tcpip_adapter_ip_info_t *ip_info)

Cause the TCP/IP stack to start the Ethernet interface with specified MAC and IP.

Note This function should be called after the Ethernet MAC hardware is initialized. In the default configuration, application code does not need to call this function - it is called automatically by the default handler for the SYSTEM_EVENT_ETH_START event.

Return

- ESP_OK
- ESP_ERR_TCPIP_ADAPTER_INVALID_PARAMS

- ESP_ERR_NO_MEM

Parameters

- `mac`: Set MAC address of this interface
- `ip_info`: Set IP address of this interface

esp_err_t **tcpip_adapter_sta_start**(uint8_t *mac, tcpip_adapter_ip_info_t *ip_info)

Cause the TCP/IP stack to start the Wi-Fi station interface with specified MAC and IP.

Note This function should be called after the Wi-Fi Station hardware is initialized. In the default configuration, application code does not need to call this function - it is called automatically by the default handler for the SYSTEM_EVENT_STA_START event.

Return

- ESP_OK
- ESP_ERR_TCPIP_ADAPTER_INVALID_PARAMS
- ESP_ERR_NO_MEM

Parameters

- `mac`: Set MAC address of this interface
- `ip_info`: Set IP address of this interface

esp_err_t **tcpip_adapter_ap_start**(uint8_t *mac, tcpip_adapter_ip_info_t *ip_info)

Cause the TCP/IP stack to start the Wi-Fi AP interface with specified MAC and IP.

DHCP server will be started automatically when this function is called.

Note This function should be called after the Wi-Fi AP hardware is initialized. In the default configuration, application code does not need to call this function - it is called automatically by the default handler for the SYSTEM_EVENT_AP_START event.

Return

- ESP_OK
- ESP_ERR_TCPIP_ADAPTER_INVALID_PARAMS
- ESP_ERR_NO_MEM

Parameters

- `mac`: Set MAC address of this interface
- `ip_info`: Set IP address of this interface

esp_err_t **tcpip_adapter_stop**(*tcpip_adapter_if_t tcpip_if*)

Cause the TCP/IP stack to stop a network interface.

Causes TCP/IP stack to clean up this interface. This includes stopping the DHCP server or client, if they are started.

Note This API is called by the default Wi-Fi and Ethernet event handlers if the underlying network driver reports that the interface has stopped.

Note To stop an interface from application code, call the network-specific API (esp_wifi_stop() or esp_eth_stop()). The driver layer will then send a stop event and the event handler should call this API. Otherwise, the driver and MAC layer will remain started.

Return

- ESP_OK
- ESP_ERR_TCPIP_ADAPTER_INVALID_PARAMS
- ESP_ERR_TCPIP_ADAPTER_IF_NOT_READY

Parameters

- `tcpip_if`: Interface which will be stopped

esp_err_t **tcpip_adapter_up**(*tcpip_adapter_if_t tcpip_if*)

Cause the TCP/IP stack to bring up an interface.

Note This function is called automatically by the default event handlers for the Wi-Fi Station and Ethernet interfaces, in response to the SYSTEM_EVENT_STA_CONNECTED and SYSTEM_EVENT_ETH_CONNECTED events, respectively.

Note This function is not normally used with Wi-Fi AP interface. If the AP interface is started, it is up.

Return

- ESP_OK
- ESP_ERR_TCPIP_ADAPTER_IF_NOT_READY

Parameters

- `tcpip_if`: Interface to bring up

esp_err_t **tcpip_adapter_down**(*tcpip_adapter_if_t tcpip_if*)

Cause the TCP/IP stack to shutdown an interface.

Note This function is called automatically by the default event handlers for the Wi-Fi Station and Ethernet interfaces, in response to the SYSTEM_EVENT_STA_DISCONNECTED and SYSTEM_EVENT_ETH_DISCONNECTED events, respectively.

Note This function is not normally used with Wi-Fi AP interface. If the AP interface is stopped, it is down.

Return

- ESP_OK
- ESP_ERR_TCPIP_ADAPTER_IF_NOT_READY

Parameters

- `tcpip_if`: Interface to shutdown

esp_err_t **tcpip_adapter_get_ip_info**(*tcpip_adapter_if_t tcpip_if*, tcpip_adapter_ip_info_t **ip_info*)

Get interface's IP address information.

If the interface is up, IP information is read directly from the TCP/IP stack.

If the interface is down, IP information is read from a copy kept in the TCP/IP adapter library itself.

Return

- ESP_OK
- ESP_ERR_TCPIP_ADAPTER_INVALID_PARAMS

Parameters

- `tcpip_if`: Interface to get IP information
- `ip_info`: If successful, IP information will be returned in this argument.

esp_err_t **tcpip_adapter_set_ip_info**(*tcpip_adapter_if_t tcpip_if*, const tcpip_adapter_ip_info_t **ip_info*)

Set interface's IP address information.

This function is mainly used to set a static IP on an interface.

If the interface is up, the new IP information is set directly in the TCP/IP stack.

The copy of IP information kept in the TCP/IP adapter library is also updated (this copy is returned if the IP is queried while the interface is still down.)

Note DHCP client/server must be stopped before setting new IP information.

Note Calling this interface for the Wi-Fi STA or Ethernet interfaces may generate a SYSTEM_EVENT_STA_GOT_IP or SYSTEM_EVENT_ETH_GOT_IP event.

Return

- ESP_OK
- ESP_ERR_TCPIP_ADAPTER_INVALID_PARAMS

- ESP_ERR_TCPIP_ADAPTER_DHCP_NOT_STOPPED If DHCP server or client is still running

Parameters

- `tcpip_if`: Interface to set IP information
- `ip_info`: IP information to set on the specified interface

esp_err_t **tcpip_adapter_set_dns_info**(*tcpip_adapter_if_t tcpip_if*, *tcpip_adapter_dns_type_t type*, *tcpip_adapter_dns_info_t *dns*)

Set DNS Server information.

This function behaves differently for different interfaces:

- For Wi-Fi Station interface and Ethernet interface, up to three types of DNS server can be set (in order of priority):
  - Main DNS Server (TCPIP_ADAPTER_DNS_MAIN)
  - Backup DNS Server (TCPIP_ADAPTER_DNS_BACKUP)
  - Fallback DNS Server (TCPIP_ADAPTER_DNS_FALLBACK)

  If DHCP client is enabled, main and backup DNS servers will be updated automatically from the DHCP lease if the relevant DHCP options are set. Fallback DNS Server is never updated from the DHCP lease and is designed to be set via this API.

  If DHCP client is disabled, all DNS server types can be set via this API only.
- For Wi-Fi AP interface, the Main DNS Server setting is used by the DHCP server to provide a DNS Server option to DHCP clients (Wi-Fi stations).
  - The default Main DNS server is the IP of the Wi-Fi AP interface itself.
  - This function can override it by setting server type TCPIP_ADAPTER_DNS_MAIN.
  - Other DNS Server types are not supported for the Wi-Fi AP interface.

Return

- ESP_OK on success
- ESP_ERR_TCPIP_ADAPTER_INVALID_PARAMS invalid params

Parameters

- `tcpip_if`: Interface to set DNS Server information
- `type`: Type of DNS Server to set: TCPIP_ADAPTER_DNS_MAIN, TCPIP_ADAPTER_DNS_BACKUP, TCPIP_ADAPTER_DNS_FALLBACK
- `dns`: DNS Server address to set

esp_err_t **tcpip_adapter_get_dns_info**(*tcpip_adapter_if_t tcpip_if*, *tcpip_adapter_dns_type_t type*, *tcpip_adapter_dns_info_t *dns*)

Get DNS Server information.

Return the currently configured DNS Server address for the specified interface and Server type.

This may be result of a previous call to tcpip_adapter_set_dns_info(). If the interface' s DHCP client is enabled, the Main or Backup DNS Server may be set by the current DHCP lease.

Return

- ESP_OK on success
- ESP_ERR_TCPIP_ADAPTER_INVALID_PARAMS invalid params

Parameters

- `tcpip_if`: Interface to get DNS Server information
- `type`: Type of DNS Server to get: TCPIP_ADAPTER_DNS_MAIN, TCPIP_ADAPTER_DNS_BACKUP, TCPIP_ADAPTER_DNS_FALLBACK
- `dns`: DNS Server result is written here on success

esp_err_t **tcpip_adapter_get_old_ip_info**(*tcpip_adapter_if_t tcpip_if*, tcpip_adapter_ip_info_t *ip_info*)

Get interface' s old IP information.

Returns an "old" IP address previously stored for the interface when the valid IP changed.

If the IP lost timer has expired (meaning the interface was down for longer than the configured interval) then the old IP information will be zero.

Return

- ESP_OK
- ESP_ERR_TCPIP_ADAPTER_INVALID_PARAMS

Parameters

- `tcpip_if`: Interface to get old IP information
- `ip_info`: If successful, IP information will be returned in this argument.

esp_err_t **tcpip_adapter_set_old_ip_info**(*tcpip_adapter_if_t tcpip_if*, **const** tcpip_adapter_ip_info_t *ip_info*)

Set interface old IP information.

This function is called from the DHCP client for the Wi-Fi STA and Ethernet interfaces, before a new IP is set. It is also called from the default handlers for the SYSTEM_EVENT_STA_CONNECTED and SYSTEM_EVENT_ETH_CONNECTED events.

Calling this function stores the previously configured IP, which can be used to determine if the IP changes in the future.

If the interface is disconnected or down for too long, the "IP lost timer" will expire (after the configured interval) and set the old IP information to zero.

Return

- ESP_OK
- ESP_ERR_TCPIP_ADAPTER_INVALID_PARAMS

Parameters

- `tcpip_if`: Interface to set old IP information
- `ip_info`: Store the old IP information for the specified interface

esp_err_t **tcpip_adapter_create_ip6_linklocal**(*tcpip_adapter_if_t tcpip_if*)

Create interface link-local IPv6 address.

Cause the TCP/IP stack to create a link-local IPv6 address for the specified interface.

This function also registers a callback for the specified interface, so that if the link-local address becomes verified as the preferred address then a SYSTEM_EVENT_GOT_IP6 event will be sent.

Return

- ESP_OK
- ESP_ERR_TCPIP_ADAPTER_INVALID_PARAMS

Parameters

- `tcpip_if`: Interface to create a link-local IPv6 address

esp_err_t **tcpip_adapter_get_ip6_linklocal**(*tcpip_adapter_if_t tcpip_if*, ip6_addr_t **if_ip6*)

Get interface link-local IPv6 address.

If the specified interface is up and a preferred link-local IPv6 address has been created for the interface, return a copy of it.

Return

- ESP_OK
- ESP_FAIL If interface is down, does not have a link-local IPv6 address, or the link-local IPv6 address is not a preferred address.

Parameters

- `tcpip_if`: Interface to get link-local IPv6 address
- `if_ip6`: IPv6 information will be returned in this argument if successful.

esp_err_t **tcpip_adapter_get_ip6_global**(*tcpip_adapter_if_t tcpip_if*, ip6_addr_t **if_ip6*)

Get interface global IPv6 address.

If the specified interface is up and a preferred global IPv6 address has been created for the interface, return a copy of it.

Return

- ESP_OK
- ESP_FAIL If interface is down, does not have a global IPv6 address.

Parameters

- `tcpip_if`: Interface to get global IPv6 address
- `if_ip6`: IPv6 information will be returned in this argument if successful.

esp_err_t **tcpip_adapter_dhcps_get_status**(*tcpip_adapter_if_t tcpip_if*, *tcpip_adapter_dhcp_status_t *status*)

Get DHCP Server status.

Return

- ESP_OK

Parameters

- `tcpip_if`: Interface to get status of DHCP server.
- `status`: If successful, the status of the DHCP server will be returned in this argument.

esp_err_t **tcpip_adapter_dhcps_option**(*tcpip_adapter_dhcp_option_mode_t opt_op*, *tcpip_adapter_dhcp_option_id_t opt_id*, void **opt_val*, uint32_t *opt_len*)

Set or Get DHCP server option.

Return

- ESP_OK
- ESP_ERR_TCPIP_ADAPTER_INVALID_PARAMS
- ESP_ERR_TCPIP_ADAPTER_DHCP_ALREADY_STOPPED
- ESP_ERR_TCPIP_ADAPTER_DHCP_ALREADY_STARTED

Parameters

- `opt_op`: TCPIP_ADAPTER_OP_SET to set an option, TCPIP_ADAPTER_OP_GET to get an option.
- `opt_id`: Option index to get or set, must be one of the supported enum values.
- `opt_val`: Pointer to the option parameter.

- `opt_len`: Length of the option parameter.

esp_err_t **tcpip_adapter_dhcps_start**(*tcpip_adapter_if_t tcpip_if*)

Start DHCP server.

Note Currently DHCP server is only supported on the Wi-Fi AP interface.

Return

- ESP_OK
- ESP_ERR_TCPIP_ADAPTER_INVALID_PARAMS
- ESP_ERR_TCPIP_ADAPTER_DHCP_ALREADY_STARTED

Parameters

- `tcpip_if`: Interface to start DHCP server. Must be TCPIP_ADAPTER_IF_AP.

esp_err_t **tcpip_adapter_dhcps_stop**(*tcpip_adapter_if_t tcpip_if*)

Stop DHCP server.

Note Currently DHCP server is only supported on the Wi-Fi AP interface.

Return

- ESP_OK
- ESP_ERR_TCPIP_ADAPTER_INVALID_PARAMS
- ESP_ERR_TCPIP_ADAPTER_DHCP_ALREADY_STOPPED
- ESP_ERR_TCPIP_ADAPTER_IF_NOT_READY

Parameters

- `tcpip_if`: Interface to stop DHCP server. Must be TCPIP_ADAPTER_IF_AP.

esp_err_t **tcpip_adapter_dhcpc_get_status**(*tcpip_adapter_if_t tcpip_if*, *tcpip_adapter_dhcp_status_t *status*)

Get DHCP client status.

Return

- ESP_OK

Parameters

- `tcpip_if`: Interface to get status of DHCP client
- `status`: If successful, the status of DHCP client will be returned in this argument.

esp_err_t **tcpip_adapter_dhcpc_option**(*tcpip_adapter_dhcp_option_mode_t* *opt_op*, *tcpip_adapter_dhcp_option_id_t* *opt_id*, void **opt_val*, uint32_t *opt_len*)

Set or Get DHCP client' s option.

Note This function is not yet implemented

Return

- ESP_ERR_NOT_SUPPORTED (not implemented)

Parameters

- `opt_op`: TCPIP_ADAPTER_OP_SET to set an option, TCPIP_ADAPTER_OP_GET to get an option.
- `opt_id`: Option index to get or set, must be one of the supported enum values.
- `opt_val`: Pointer to the option parameter.
- `opt_len`: Length of the option parameter.

esp_err_t **tcpip_adapter_dhcpc_start**(*tcpip_adapter_if_t* *tcpip_if*)

Start DHCP client.

Note DHCP Client is only supported for the Wi-Fi station and Ethernet interfaces.

Note The default event handlers for the SYSTEM_EVENT_STA_CONNECTED and SYSTEM_EVENT_ETH_CONNECTED events call this function.

Return

- ESP_OK
- ESP_ERR_TCPIP_ADAPTER_INVALID_PARAMS
- ESP_ERR_TCPIP_ADAPTER_DHCP_ALREADY_STARTED
- ESP_ERR_TCPIP_ADAPTER_DHCPC_START_FAILED

Parameters

- `tcpip_if`: Interface to start the DHCP client

esp_err_t **tcpip_adapter_dhcpc_stop**(*tcpip_adapter_if_t* *tcpip_if*)

Stop DHCP client.

Note DHCP Client is only supported for the Wi-Fi station and Ethernet interfaces.

Note Calling tcpip_adapter_stop() or tcpip_adapter_down() will also stop the DHCP Client if it is running.

Return

- ESP_OK
- ESP_ERR_TCPIP_ADAPTER_INVALID_PARAMS
- ESP_ERR_TCPIP_ADAPTER_DHCP_ALREADY_STOPPED
- ESP_ERR_TCPIP_ADAPTER_IF_NOT_READY

Parameters

- `tcpip_if`: Interface to stop the DHCP client

esp_err_t **tcpip_adapter_eth_input**(void **buffer*, uint16_t *len*, void **eb*)

Receive an Ethernet frame from the Ethernet interface.

This function will automatically be installed by esp_eth_init(). The Ethernet driver layer will then call this function to forward frames to the TCP/IP stack.

Note Application code does not usually need to use this function directly.

Return

- ESP_OK

Parameters

- `buffer`: Received data
- `len`: Length of the data frame
- `eb`: Pointer to internal Wi-Fi buffer (ignored for Ethernet)

esp_err_t **tcpip_adapter_sta_input**(void **buffer*, uint16_t *len*, void **eb*)

Receive an 802.11 data frame from the Wi-Fi Station interface.

This function should be installed by calling esp_wifi_reg_rxcb(). The Wi-Fi driver layer will then call this function to forward frames to the TCP/IP stack.

Note Installation happens automatically in the default handler for the SYSTEM_EVENT_STA_CONNECTED event.

Note Application code does not usually need to call this function directly.

Return

- ESP_OK

Parameters

- `buffer`: Received data
- `len`: Length of the data frame
- `eb`: Pointer to internal Wi-Fi buffer

esp_err_t **tcpip_adapter_ap_input**(void **buffer*, uint16_t *len*, void **eb*)

Receive an 802.11 data frame from the Wi-Fi AP interface.

This function should be installed by calling esp_wifi_reg_rxcb(). The Wi-Fi driver layer will then call this function to forward frames to the TCP/IP stack.

Note Installation happens automatically in the default handler for the SYSTEM_EVENT_AP_START event.

Note Application code does not usually need to call this function directly.

Return

- ESP_OK

Parameters

- `buffer`: Received data
- `len`: Length of the data frame
- `eb`: Pointer to internal Wi-Fi buffer

esp_interface_t **tcpip_adapter_get_esp_if**(void **dev*)

Get network interface index.

Get network interface from TCP/IP implementation-specific interface pointer.

Return

- ESP_IF_WIFI_STA
- ESP_IF_WIFI_AP
- ESP_IF_ETH
- ESP_IF_MAX - invalid parameter

Parameters

- `dev`: Implementation-specific TCP/IP stack interface pointer.

esp_err_t **tcpip_adapter_get_sta_list**(const *wifi_sta_list_t* **wifi_sta_list*, tcpip_adapter_sta_list_t **tcpip_sta_list*)

Get IP information for stations connected to the Wi-Fi AP interface.

Return

- ESP_OK
- ESP_ERR_TCPIP_ADAPTER_NO_MEM
- ESP_ERR_TCPIP_ADAPTER_INVALID_PARAMS

Parameters

- `wifi_sta_list`: Wi-Fi station info list, returned from esp_wifi_ap_get_sta_list()
- `tcpip_sta_list`: IP layer station info list, corresponding to MAC addresses provided in wifi_sta_list

esp_err_t **tcpip_adapter_set_hostname**(*tcpip_adapter_if_t tcpip_if*, const char **hostname*)

Set the hostname of an interface.

Return

- ESP_OK - success
- ESP_ERR_TCPIP_ADAPTER_IF_NOT_READY - interface status error
- ESP_ERR_TCPIP_ADAPTER_INVALID_PARAMS - parameter error

Parameters

- `tcpip_if`: Interface to set the hostname
- `hostname`: New hostname for the interface. Maximum length 32 bytes.

esp_err_t **tcpip_adapter_get_hostname**(*tcpip_adapter_if_t tcpip_if*, const char ***hostname*)

Get interface hostname.

Return

- ESP_OK - success
- ESP_ERR_TCPIP_ADAPTER_IF_NOT_READY - interface status error
- ESP_ERR_TCPIP_ADAPTER_INVALID_PARAMS - parameter error

Parameters

- `tcpip_if`: Interface to get the hostname
- `hostname`: Returns a pointer to the hostname. May be NULL if no hostname is set. If set non-NULL, pointer remains valid (and string may change if the hostname changes).

esp_err_t **tcpip_adapter_get_netif**(*tcpip_adapter_if_t tcpip_if*, void ***netif*)

Get the TCP/IP stack-specific interface that is assigned to a given interface.

Note For lwIP, this returns a pointer to a netif structure.

Return

- ESP_OK - success
- ESP_ERR_TCPIP_ADAPTER_IF_NOT_READY - interface status error
- ESP_ERR_TCPIP_ADAPTER_INVALID_PARAMS - parameter error

Parameters

- `tcpip_if`: Interface to get the implementation-specific interface
- `netif`: Pointer to the implementation-specific interface

bool **tcpip_adapter_is_netif_up**(*tcpip_adapter_if_t tcpip_if*)

Test if supplied interface is up or down.

Return

- true - Interface is up
- false - Interface is down

Parameters

- `tcpip_if`: Interface to test up/down status

Structures

struct tcpip_adapter_dns_info_t

DNS server info.

Public Members

ip_addr_t **ip**

IPV4 address of DNS server

Macros

ESP_ERR_TCPIP_ADAPTER_BASE

ESP_ERR_TCPIP_ADAPTER_INVALID_PARAMS

ESP_ERR_TCPIP_ADAPTER_IF_NOT_READY

ESP_ERR_TCPIP_ADAPTER_DHCPC_START_FAILED

ESP_ERR_TCPIP_ADAPTER_DHCP_ALREADY_STARTED

ESP_ERR_TCPIP_ADAPTER_DHCP_ALREADY_STOPPED

ESP_ERR_TCPIP_ADAPTER_NO_MEM

ESP_ERR_TCPIP_ADAPTER_DHCP_NOT_STOPPED

TCPIP_HOSTNAME_MAX_SIZE

Type Definitions

typedef *tcpip_adapter_dhcp_option_mode_t* tcpip_adapter_option_mode_t

typedef *tcpip_adapter_dhcp_option_id_t* tcpip_adapter_option_id_t

Enumerations

enum tcpip_adapter_if_t

Values:

TCPIP_ADAPTER_IF_STA = 0

Wi-Fi STA (station) interface

TCPIP_ADAPTER_IF_AP

Wi-Fi soft-AP interface

TCPIP_ADAPTER_IF_ETH

Ethernet interface

TCPIP_ADAPTER_IF_MAX

enum tcpip_adapter_dns_type_t

Type of DNS server.

Values:

TCPIP_ADAPTER_DNS_MAIN = 0

DNS main server address

TCPIP_ADAPTER_DNS_BACKUP

DNS backup server address (Wi-Fi STA and Ethernet only)

TCPIP_ADAPTER_DNS_FALLBACK

DNS fallback server address (Wi-Fi STA and Ethernet only)

TCPIP_ADAPTER_DNS_MAX

enum tcpip_adapter_dhcp_status_t

Status of DHCP client or DHCP server.

Values:

TCPIP_ADAPTER_DHCP_INIT = 0

DHCP client/server is in initial state (not yet started)

TCPIP_ADAPTER_DHCP_STARTED

DHCP client/server has been started

TCPIP_ADAPTER_DHCP_STOPPED

DHCP client/server has been stopped

TCPIP_ADAPTER_DHCP_STATUS_MAX

enum tcpip_adapter_dhcp_option_mode_t

Mode for DHCP client or DHCP server option functions.

Values:

TCPIP_ADAPTER_OP_START = 0

TCPIP_ADAPTER_OP_SET

Set option

TCPIP_ADAPTER_OP_GET

Get option

TCPIP_ADAPTER_OP_MAX

enum tcpip_adapter_dhcp_option_id_t

Supported options for DHCP client or DHCP server.

Values:

TCPIP_ADAPTER_DOMAIN_NAME_SERVER = 6

Domain name server

TCPIP_ADAPTER_ROUTER_SOLICITATION_ADDRESS = 32

Solicitation router address

TCPIP_ADAPTER_REQUESTED_IP_ADDRESS = 50

Request specific IP address

TCPIP_ADAPTER_IP_ADDRESS_LEASE_TIME = 51

Request IP address lease time

TCPIP_ADAPTER_IP_REQUEST_RETRY_TIME = 52

Request IP address retry counter

Example code for TCP/IP socket APIs is provided in protocols/sockets directory of ESP-IDF examples.

3.2.4 Application Layer

Documentation for application layer network protocols (above the IP network layer) is provided in *Application Protocols*.

3.3 Peripherals API

3.3.1 Analog to Digital Converter

Overview

The ESP32 integrates two 12-bit SAR (Successive Approximation Register) ADCs supporting a total of 18 measurement channels (analog enabled pins).

The ADC driver API supports ADC1 (8 channels, attached to GPIOs 32 - 39), and ADC2 (10 channels, attached to GPIOs 0, 2, 4, 12 - 15 and 25 - 27). However, the usage of ADC2 has some restrictions for the application:

1. ADC2 is used by the Wi-Fi driver. Therefore the application can only use ADC2 when the Wi-Fi driver has not started.
2. Some of the ADC2 pins are used as strapping pins (GPIO 0, 2, 15) thus cannot be used freely. Such is the case in the following official Development Kits:

- *ESP32 DevKitC*: GPIO 0 cannot be used due to external auto program circuits.
- *ESP-WROVER-KIT*: GPIO 0, 2, 4 and 15 cannot be used due to external connections for different purposes.

Configuration and Reading ADC

The ADC should be configured before reading is taken.

- For ADC1, configure desired precision and attenuation by calling functions *adc1_config_width()* and *adc1_config_channel_atten()*.
- For ADC2, configure the attenuation by *adc2_config_channel_atten()*. The reading width of ADC2 is configured every time you take the reading.

Attenuation configuration is done per channel, see *adc1_channel_t* and *adc2_channel_t*, set as a parameter of above functions.

Then it is possible to read ADC conversion result with *adc1_get_raw()* and *adc2_get_raw()*. Reading width of ADC2 should be set as a parameter of *adc2_get_raw()* instead of in the configuration functions.

注解: Since the ADC2 is shared with the WIFI module, which has higher priority, reading operation of *adc2_get_raw()* will fail between *esp_wifi_start()* and *esp_wifi_stop()*. Use the return code to see whether the reading is successful.

It is also possible to read the internal hall effect sensor via ADC1 by calling dedicated function *hall_sensor_read()*. Note that even the hall sensor is internal to ESP32, reading from it uses channels 0 and 3 of ADC1 (GPIO 36 and 39). Do not connect anything else to these pins and do not change their configuration. Otherwise it may affect the measurement of low value signal from the sensor.

This API provides convenient way to configure ADC1 for reading from *ULP*. To do so, call function *adc1_ulp_enable()* and then set precision and attenuation as discussed above.

There is another specific function *adc2_vref_to_gpio()* used to route internal reference voltage to a GPIO pin. It comes handy to calibrate ADC reading and this is discussed in section *Minimizing Noise*.

Application Examples

Reading voltage on ADC1 channel 0 (GPIO 36):

```
#include <driver/adc.h>

...

    adc1_config_width(ADC_WIDTH_BIT_12);
    adc1_config_channel_atten(ADC1_CHANNEL_0,ADC_ATTEN_DB_0);
    int val = adc1_get_raw(ADC1_CHANNEL_0);
```

The input voltage in above example is from 0 to 1.1V (0 dB attenuation). The input range can be extended by setting higher attenuation, see *adc_atten_t*. An example using the ADC driver including calibration (discussed below) is available in esp-idf: peripherals/adc

Reading voltage on ADC2 channel 7 (GPIO 27):

```
#include <driver/adc.h>

...

    int read_raw;
    adc2_config_channel_atten( ADC2_CHANNEL_7, ADC_ATTEN_0db );

    esp_err_t r = adc2_get_raw( ADC2_CHANNEL_7, ADC_WIDTH_12Bit, &read_raw);
    if ( r == ESP_OK ) {
        printf("%d\n", read_raw );
    } else if ( r == ESP_ERR_TIMEOUT ) {
        printf("ADC2 used by Wi-Fi.\n");
    }
```

The reading may fail due to collision with Wi-Fi, should check it. An example using the ADC2 driver to read the output of DAC is available in esp-idf: peripherals/adc2

Reading the internal hall effect sensor:

```
#include <driver/adc.h>

...
```

(下页继续)

(续上页)

```
adc1_config_width(ADC_WIDTH_BIT_12);
int val = hall_sensor_read();
```

The value read in both these examples is 12 bits wide (range 0-4095).

Minimizing Noise

The ESP32 ADC can be sensitive to noise leading to large discrepancies in ADC readings. To minimize noise, users may connect a 0.1uF capacitor to the ADC input pad in use. Multisampling may also be used to further mitigate the effects of noise.

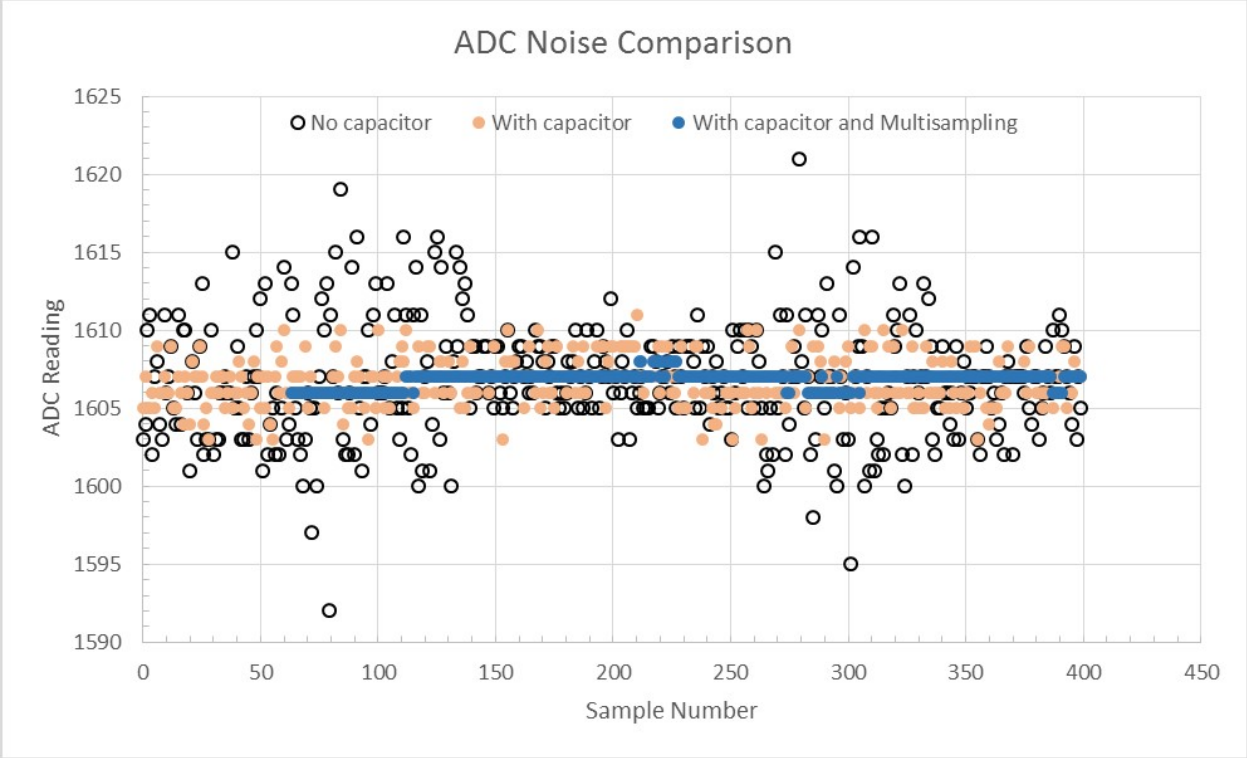

图 4: Graph illustrating noise mitigation using capacitor and multisampling of 64 samples.

ADC Calibration

The esp_adc_cal/include/esp_adc_cal.h API provides functions to correct for differences in measured voltages caused by variation of ADC reference voltages (Vref) between chips. Per design the ADC reference voltage is 1100mV, however the true reference voltage can range from 1000mV to 1200mV amongst different ESP32s.

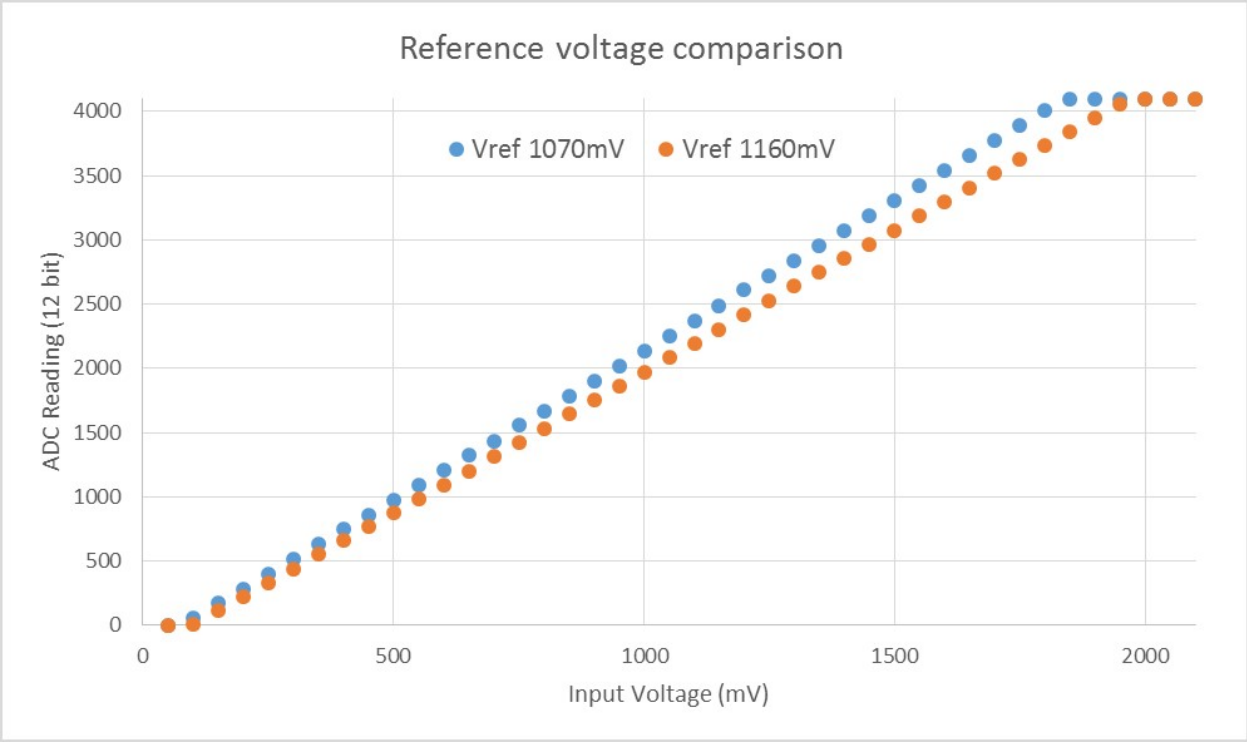

图 5: Graph illustrating effect of differing reference voltages on the ADC voltage curve.

Correcting ADC readings using this API involves characterizing one of the ADCs at a given attenuation to obtain a characteristics curve (ADC-Voltage curve) that takes into account the difference in ADC reference voltage. The characteristics curve is in the form of `y = coeff_a * x + coeff_b` and is used to convert ADC readings to voltages in mV. Calculation of the characteristics curve is based on calibration values which can be stored in eFuse or provided by the user.

Calibration Values

Calibration values are used to generate characteristic curves that account for the unique ADC reference voltage of a particular ESP32. There are currently three sources of calibration values. The availability of these calibration values will depend on the type and production date of the ESP32 chip/module.

- **Two Point** values represent each of the ADCs' readings at 150mV and 850mV. To obtain more accurate calibration results these values should be measured by user and burned into eFuse `BLOCK3`.
- **eFuse Vref** represents the true ADC reference voltage. This value is measured and burned into eFuse `BLOCK0` during factory calibration.
- **Default Vref** is an estimate of the ADC reference voltage provided by the user as a parameter during characterization. If Two Point or eFuse Vref values are unavailable, **Default Vref** will be used.

Individual measurement and burning of the **eFuse Vref** has been applied to ESP32-D0WD and ESP32-D0WDQ6 chips produced on/after the 1st week of 2018. Such chips may be recognized by date codes on/later

than 012018 (see Line 4 on figure below).

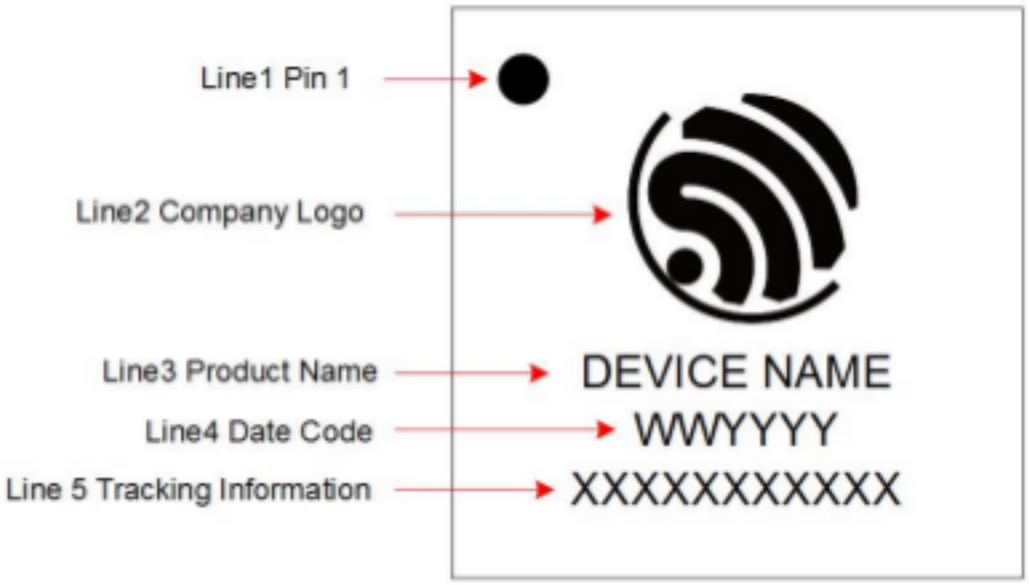

图 6: ESP32 Chip Surface Marking

If you would like to purchase chips or modules with calibration, double check with distributor or Espressif directly.

If you are unable to check the date code (i.e. the chip may be enclosed inside a canned module, etc.), you can still verify if **eFuse Vref** is present by running espefuse.py tool with `adc_info` parameter

```
$IDF_PATH/components/esptool_py/esptool/espefuse.py --port /dev/ttyUSB0 adc_info
```

Replace `/dev/ttyUSB0` with ESP32 board' s port name.

A chip that has specific **eFuse Vref** value programmed (in this case 1093mV) will be reported as follows:

```
ADC VRef calibration: 1093mV
```

In another example below the **eFuse Vref** is not programmed:

```
ADC VRef calibration: None (1100mV nominal)
```

For a chip with two point calibration the message will look similar to:

```
ADC VRef calibration: 1149mV
ADC readings stored in efuse BLK3:
    ADC1 Low reading  (150mV): 306
    ADC1 High reading (850mV): 3153
    ADC2 Low reading  (150mV): 389
    ADC2 High reading (850mV): 3206
```

Application Example

For a full example see esp-idf: peripherals/adc

Characterizing an ADC at a particular attenuation:

```
#include "driver/adc.h"
#include "esp_adc_cal.h"

...

    //Characterize ADC at particular atten
    esp_adc_cal_characteristics_t *adc_chars = calloc(1, sizeof(esp_adc_cal_
↪characteristics_t));
    esp_adc_cal_value_t val_type = esp_adc_cal_characterize(unit, atten, ADC_WIDTH_BIT_
↪12, DEFAULT_VREF, adc_chars);
    //Check type of calibration value used to characterize ADC
    if (val_type == ESP_ADC_CAL_VAL_EFUSE_VREF) {
        printf("eFuse Vref");
    } else if (val_type == ESP_ADC_CAL_VAL_EFUSE_TP) {
        printf("Two Point");
    } else {
        printf("Default");
    }
```

Reading an ADC then converting the reading to a voltage:

```
#include "driver/adc.h"
#include "esp_adc_cal.h"

...
    uint32_t reading =  adc1_get_raw(ADC1_CHANNEL_5);
    uint32_t voltage = esp_adc_cal_raw_to_voltage(reading, adc_chars);
```

Routing ADC reference voltage to GPIO, so it can be manually measured (for **Default Vref**):

```
#include "driver/adc.h"

...

    esp_err_t status = adc2_vref_to_gpio(GPIO_NUM_25);
    if (status == ESP_OK) {
        printf("v_ref routed to GPIO\n");
```

(下页继续)

(续上页)

```
    } else {
        printf("failed to route v_ref\n");
    }
```

GPIO Lookup Macros

There are macros available to specify the GPIO number of a ADC channel, or vice versa. e.g.

1. `ADC1_CHANNEL_0_GPIO_NUM` is the GPIO number of ADC1 channel 0 (36);
2. `ADC1_GPIO32_CHANNEL` is the ADC1 channel number of GPIO 32 (ADC1 channel 4).

API Reference

This reference covers three components:

- *ADC driver*
- *ADC Calibration*
- *GPIO Lookup Macros*

ADC driver

Header File

- driver/include/driver/adc.h

Functions

esp_err_t **adc1_pad_get_io_num**(*adc1_channel_t channel*, *gpio_num_t *gpio_num*)

Get the gpio number of a specific ADC1 channel.

Return

- ESP_OK if success
- ESP_ERR_INVALID_ARG if channal not valid

Parameters

- `channel`: Channel to get the gpio number
- `gpio_num`: output buffer to hold the gpio number

esp_err_t **adc1_config_width**(*adc_bits_width_t width_bit*)

Configure ADC1 capture width, meanwhile enable output invert for ADC1. The configuration is for all channels of ADC1.

Return

- ESP_OK success
- ESP_ERR_INVALID_ARG Parameter error

Parameters

- `width_bit`: Bit capture width for ADC1

esp_err_t **adc_set_data_width**(*adc_unit_t adc_unit*, *adc_bits_width_t width_bit*)

Configure ADC capture width.

Return

- ESP_OK success
- ESP_ERR_INVALID_ARG Parameter error

Parameters

- `adc_unit`: ADC unit index
- `width_bit`: Bit capture width for ADC unit.

esp_err_t **adc1_config_channel_atten**(*adc1_channel_t channel*, *adc_atten_t atten*)

Set the attenuation of a particular channel on ADC1, and configure its associated GPIO pin mux.

The default ADC full-scale voltage is 1.1V. To read higher voltages (up to the pin maximum voltage, usually 3.3V) requires setting >0dB signal attenuation for that ADC channel.

Note For any given channel, this function must be called before the first time adc1_get_raw() is called for that channel.

Note This function can be called multiple times to configure multiple ADC channels simultaneously. adc1_get_raw() can then be called for any configured channel.

When VDD_A is 3.3V:

- 0dB attenuaton (ADC_ATTEN_DB_0) gives full-scale voltage 1.1V
- 2.5dB attenuation (ADC_ATTEN_DB_2_5) gives full-scale voltage 1.5V
- 6dB attenuation (ADC_ATTEN_DB_6) gives full-scale voltage 2.2V
- 11dB attenuation (ADC_ATTEN_DB_11) gives full-scale voltage 3.9V (see note below)

Due to ADC characteristics, most accurate results are obtained within the following approximate voltage ranges:

Note The full-scale voltage is the voltage corresponding to a maximum reading (depending on ADC1 configured bit width, this value is: 4095 for 12-bits, 2047 for 11-bits, 1023 for 10-bits, 511 for 9 bits.)

Note At 11dB attenuation the maximum voltage is limited by VDD_A, not the full scale voltage.

- 0dB attenuaton (ADC_ATTEN_DB_0) between 100 and 950mV
- 2.5dB attenuation (ADC_ATTEN_DB_2_5) between 100 and 1250mV
- 6dB attenuation (ADC_ATTEN_DB_6) between 150 to 1750mV
- 11dB attenuation (ADC_ATTEN_DB_11) between 150 to 2450mV

For maximum accuracy, use the ADC calibration APIs and measure voltages within these recommended ranges.

Return

- ESP_OK success
- ESP_ERR_INVALID_ARG Parameter error

Parameters

- `channel`: ADC1 channel to configure
- `atten`: Attenuation level

int **adc1_get_raw**(*adc1_channel_t channel*)

Take an ADC1 reading from a single channel.

Note When the power switch of SARADC1, SARADC2, HALL sensor and AMP sensor is turned on, the input of GPIO36 and GPIO39 will be pulled down for about 80ns. When enabling power for any of these peripherals, ignore input from GPIO36 and GPIO39. Please refer to section 3.11 of 'ECO_and_Workarounds_for_Bugs_in_ESP32' for the description of this issue.

Note Call adc1_config_width() before the first time this function is called.

Note For any given channel, adc1_config_channel_atten(channel) must be called before the first time this function is called. Configuring a new channel does not prevent a previously configured channel from being read.

Return

- -1: Parameter error
- Other: ADC1 channel reading.

Parameters

- `channel`: ADC1 channel to read

void **adc_power_on**(void)

Enable ADC power.

void **adc_power_off**(void)

Power off SAR ADC.

void **adc_power_acquire**(void)

Increment the usage counter for ADC module. ADC will stay powered on while the counter is greater than 0. Call adc_power_release when done using the ADC.

void **adc_power_release**(void)

Decrement the usage counter for ADC module. ADC will stay powered on while the counter is greater than 0. Call this function when done using the ADC.

esp_err_t **adc_gpio_init**(*adc_unit_t adc_unit*, *adc_channel_t channel*)

Initialize ADC pad.

Return

- ESP_OK success
- ESP_ERR_INVALID_ARG Parameter error

Parameters

- `adc_unit`: ADC unit index
- `channel`: ADC channel index

esp_err_t **adc_set_data_inv**(*adc_unit_t adc_unit*, bool *inv_en*)

Set ADC data invert.

Return

- ESP_OK success
- ESP_ERR_INVALID_ARG Parameter error

Parameters

- `adc_unit`: ADC unit index
- `inv_en`: whether enable data invert

esp_err_t **adc_set_clk_div**(uint8_t *clk_div*)

Set ADC source clock.

Return

- ESP_OK success

Parameters

- `clk_div`: ADC clock divider, ADC clock is divided from APB clock

esp_err_t **adc_set_i2s_data_source**(*adc_i2s_source_t src*)

Set I2S data source.

Return

- ESP_OK success

Parameters

- `src`: I2S DMA data source, I2S DMA can get data from digital signals or from ADC.

esp_err_t **adc_i2s_mode_init**(*adc_unit_t adc_unit*, *adc_channel_t channel*)

Initialize I2S ADC mode.

Return

- ESP_OK success
- ESP_ERR_INVALID_ARG Parameter error

Parameters

- `adc_unit`: ADC unit index
- `channel`: ADC channel index

void **adc1_ulp_enable**()

Configure ADC1 to be usable by the ULP.

This function reconfigures ADC1 to be controlled by the ULP. Effect of this function can be reverted using adc1_get_raw function.

Note that adc1_config_channel_atten, adc1_config_width functions need to be called to configure ADC1 channels, before ADC1 is used by the ULP.

int **hall_sensor_read**()

Read Hall Sensor.

Note When the power switch of SARADC1, SARADC2, HALL sensor and AMP sensor is turned on, the input of GPIO36 and GPIO39 will be pulled down for about 80ns. When enabling power for any of these peripherals, ignore input from GPIO36 and GPIO39. Please refer to section 3.11 of 'ECO_and_Workarounds_for_Bugs_in_ESP32' for the description of this issue.

Note The Hall Sensor uses channels 0 and 3 of ADC1. Do not configure these channels for use as ADC channels.

Note The ADC1 module must be enabled by calling adc1_config_width() before calling hall_sensor_read(). ADC1 should be configured for 12 bit readings, as the hall sensor readings are low values and do not cover the full range of the ADC.

Return The hall sensor reading.

esp_err_t **adc2_pad_get_io_num**(*adc2_channel_t channel*, *gpio_num_t *gpio_num*)

Get the gpio number of a specific ADC2 channel.

Return

- ESP_OK if success
- ESP_ERR_INVALID_ARG if channal not valid

Parameters

- `channel`: Channel to get the gpio number
- `gpio_num`: output buffer to hold the gpio number

esp_err_t **adc2_config_channel_atten**(*adc2_channel_t channel*, *adc_atten_t atten*)

Configure the ADC2 channel, including setting attenuation.

The default ADC full-scale voltage is 1.1V. To read higher voltages (up to the pin maximum voltage, usually 3.3V) requires setting >0dB signal attenuation for that ADC channel.

Note This function also configures the input GPIO pin mux to connect it to the ADC2 channel. It must be called before calling `adc2_get_raw()` for this channel.

When VDD_A is 3.3V:

- 0dB attenuaton (ADC_ATTEN_0db) gives full-scale voltage 1.1V
- 2.5dB attenuation (ADC_ATTEN_2_5db) gives full-scale voltage 1.5V
- 6dB attenuation (ADC_ATTEN_6db) gives full-scale voltage 2.2V
- 11dB attenuation (ADC_ATTEN_11db) gives full-scale voltage 3.9V (see note below)

Note The full-scale voltage is the voltage corresponding to a maximum reading (depending on ADC2 configured bit width, this value is: 4095 for 12-bits, 2047 for 11-bits, 1023 for 10-bits, 511 for 9 bits.)

Note At 11dB attenuation the maximum voltage is limited by VDD_A, not the full scale voltage.

Return

- ESP_OK success
- ESP_ERR_INVALID_ARG Parameter error

Parameters

- `channel`: ADC2 channel to configure
- `atten`: Attenuation level

esp_err_t **adc2_get_raw**(*adc2_channel_t channel*, *adc_bits_width_t width_bit*, int *raw_out)

Take an ADC2 reading on a single channel.

Note When the power switch of SARADC1, SARADC2, HALL sensor and AMP sensor is turned on, the input of GPIO36 and GPIO39 will be pulled down for about 80ns. When enabling power for any of these peripherals, ignore input from GPIO36 and GPIO39. Please refer to section 3.11 of 'ECO_and_Workarounds_for_Bugs_in_ESP32' for the description of this issue.

Note For a given channel, `adc2_config_channel_atten()` must be called before the first time this function is called. If Wi-Fi is started via `esp_wifi_start()`, this function will always fail with `ESP_ERR_TIMEOUT`.

Return

- ESP_OK if success
- ESP_ERR_TIMEOUT the WIFI is started, using the ADC2

Parameters

- `channel`: ADC2 channel to read
- `width_bit`: Bit capture width for ADC2
- `raw_out`: the variable to hold the output data.

esp_err_t **adc2_vref_to_gpio**(*gpio_num_t gpio*)

Output ADC2 reference voltage to gpio 25 or 26 or 27.

This function utilizes the testing mux exclusive to ADC 2 to route the reference voltage one of ADC2's channels. Supported gpios are gpios 25, 26, and 27. This refernce voltage can be manually read from the pin and used in the esp_adc_cal component.

Return

- ESP_OK: v_ref successfully routed to selected gpio
- ESP_ERR_INVALID_ARG: Unsupported gpio

Parameters

- `gpio`: GPIO number (gpios 25,26,27 supported)

Macros

`ADC_ATTEN_0db`

`ADC_ATTEN_2_5db`

`ADC_ATTEN_6db`

`ADC_ATTEN_11db`

ADC_WIDTH_9Bit

ADC_WIDTH_10Bit

ADC_WIDTH_11Bit

ADC_WIDTH_12Bit

Enumerations

enum adc_atten_t

Values:

ADC_ATTEN_DB_0 = 0

The input voltage of ADC will be reduced to about 1/1

ADC_ATTEN_DB_2_5 = 1

The input voltage of ADC will be reduced to about 1/1.34

ADC_ATTEN_DB_6 = 2

The input voltage of ADC will be reduced to about 1/2

ADC_ATTEN_DB_11 = 3

The input voltage of ADC will be reduced to about 1/3.6

ADC_ATTEN_MAX

enum adc_bits_width_t

Values:

ADC_WIDTH_BIT_9 = 0

ADC capture width is 9Bit

ADC_WIDTH_BIT_10 = 1

ADC capture width is 10Bit

ADC_WIDTH_BIT_11 = 2

ADC capture width is 11Bit

ADC_WIDTH_BIT_12 = 3

ADC capture width is 12Bit

ADC_WIDTH_MAX

enum adc1_channel_t

Values:

ADC1_CHANNEL_0 = 0

ADC1 channel 0 is GPIO36

ADC1_CHANNEL_1

ADC1 channel 1 is GPIO37

`ADC1_CHANNEL_2`
ADC1 channel 2 is GPIO38

`ADC1_CHANNEL_3`
ADC1 channel 3 is GPIO39

`ADC1_CHANNEL_4`
ADC1 channel 4 is GPIO32

`ADC1_CHANNEL_5`
ADC1 channel 5 is GPIO33

`ADC1_CHANNEL_6`
ADC1 channel 6 is GPIO34

`ADC1_CHANNEL_7`
ADC1 channel 7 is GPIO35

`ADC1_CHANNEL_MAX`

`enum adc2_channel_t`
Values:

`ADC2_CHANNEL_0` = 0
ADC2 channel 0 is GPIO4

`ADC2_CHANNEL_1`
ADC2 channel 1 is GPIO0

`ADC2_CHANNEL_2`
ADC2 channel 2 is GPIO2

`ADC2_CHANNEL_3`
ADC2 channel 3 is GPIO15

`ADC2_CHANNEL_4`
ADC2 channel 4 is GPIO13

`ADC2_CHANNEL_5`
ADC2 channel 5 is GPIO12

`ADC2_CHANNEL_6`
ADC2 channel 6 is GPIO14

`ADC2_CHANNEL_7`
ADC2 channel 7 is GPIO27

`ADC2_CHANNEL_8`
ADC2 channel 8 is GPIO25

`ADC2_CHANNEL_9`
ADC2 channel 9 is GPIO26

ADC2_CHANNEL_MAX

enum adc_channel_t

Values:

ADC_CHANNEL_0 = 0

ADC channel

ADC_CHANNEL_1

ADC channel

ADC_CHANNEL_2

ADC channel

ADC_CHANNEL_3

ADC channel

ADC_CHANNEL_4

ADC channel

ADC_CHANNEL_5

ADC channel

ADC_CHANNEL_6

ADC channel

ADC_CHANNEL_7

ADC channel

ADC_CHANNEL_8

ADC channel

ADC_CHANNEL_9

ADC channel

ADC_CHANNEL_MAX

enum adc_unit_t

Values:

ADC_UNIT_1 = 1

SAR ADC 1

ADC_UNIT_2 = 2

SAR ADC 2, not supported yet

ADC_UNIT_BOTH = 3

SAR ADC 1 and 2, not supported yet

ADC_UNIT_ALTER = 7

SAR ADC 1 and 2 alternative mode, not supported yet

ADC_UNIT_MAX

enum adc_i2s_encode_t

Values:

ADC_ENCODE_12BIT

ADC to I2S data format, [15:12]-channel [11:0]-12 bits ADC data

ADC_ENCODE_11BIT

ADC to I2S data format, [15]-1 [14:11]-channel [10:0]-11 bits ADC data

ADC_ENCODE_MAX

enum adc_i2s_source_t

Values:

ADC_I2S_DATA_SRC_IO_SIG = 0

I2S data from GPIO matrix signal

ADC_I2S_DATA_SRC_ADC = 1

I2S data from ADC

ADC_I2S_DATA_SRC_MAX

ADC Calibration

Header File

- esp_adc_cal/include/esp_adc_cal.h

Functions

esp_err_t **esp_adc_cal_check_efuse**(*esp_adc_cal_value_t value_type*)

Checks if ADC calibration values are burned into eFuse.

This function checks if ADC reference voltage or Two Point values have been burned to the eFuse of the current ESP32

Return

- ESP_OK: The calibration mode is supported in eFuse
- ESP_ERR_NOT_SUPPORTED: Error, eFuse values are not burned
- ESP_ERR_INVALID_ARG: Error, invalid argument (ESP_ADC_CAL_VAL_DEFAULT_VREF)

Parameters

- `value_type`: Type of calibration value (ESP_ADC_CAL_VAL_EFUSE_VREF or ESP_ADC_CAL_VAL_EFUSE_TP)

esp_adc_cal_value_t **esp_adc_cal_characterize**(*adc_unit_t adc_num*, *adc_atten_t atten*, *adc_bits_width_t bit_width*, uint32_t *default_vref*, *esp_adc_cal_characteristics_t* **chars*)

Characterize an ADC at a particular attenuation.

This function will characterize the ADC at a particular attenuation and generate the ADC-Voltage curve in the form of [y = coeff_a * x + coeff_b]. Characterization can be based on Two Point values, eFuse Vref, or default Vref and the calibration values will be prioritized in that order.

Note Two Point values and eFuse Vref can be enabled/disabled using menuconfig.

Return

- ESP_ADC_CAL_VAL_EFUSE_VREF: eFuse Vref used for characterization
- ESP_ADC_CAL_VAL_EFUSE_TP: Two Point value used for characterization (only in Linear Mode)
- ESP_ADC_CAL_VAL_DEFAULT_VREF: Default Vref used for characterization

Parameters

- `adc_num`: ADC to characterize (ADC_UNIT_1 or ADC_UNIT_2)
- `atten`: Attenuation to characterize
- `bit_width`: Bit width configuration of ADC
- `default_vref`: Default ADC reference voltage in mV (used if eFuse values is not available)
- `chars`: Pointer to empty structure used to store ADC characteristics

uint32_t **esp_adc_cal_raw_to_voltage**(uint32_t *adc_reading*, **const** *esp_adc_cal_characteristics_t* **chars*)

Convert an ADC reading to voltage in mV.

This function converts an ADC reading to a voltage in mV based on the ADC' s characteristics.

Note Characteristics structure must be initialized before this function is called (call esp_adc_cal_characterize())

Return Voltage in mV

Parameters

- `adc_reading`: ADC reading
- `chars`: Pointer to initialized structure containing ADC characteristics

esp_err_t **esp_adc_cal_get_voltage**(*adc_channel_t channel*, **const** *esp_adc_cal_characteristics_t* **chars*, uint32_t **voltage*)

Reads an ADC and converts the reading to a voltage in mV.

This function reads an ADC then converts the raw reading to a voltage in mV based on the characteristics provided. The ADC that is read is also determined by the characteristics.

Note The Characteristics structure must be initialized before this function is called (call esp_adc_cal_characterize())

Return

- ESP_OK: ADC read and converted to mV
- ESP_ERR_TIMEOUT: Error, timed out attempting to read ADC
- ESP_ERR_INVALID_ARG: Error due to invalid arguments

Parameters

- `channel`: ADC Channel to read
- `chars`: Pointer to initialized ADC characteristics structure
- `voltage`: Pointer to store converted voltage

Structures

`struct esp_adc_cal_characteristics_t`

Structure storing characteristics of an ADC.

Note Call esp_adc_cal_characterize() to initialize the structure

Public Members

adc_unit_t **adc_num**

ADC number

adc_atten_t **atten**

ADC attenuation

adc_bits_width_t **bit_width**

ADC bit width

uint32_t **coeff_a**

Gradient of ADC-Voltage curve

uint32_t **coeff_b**

Offset of ADC-Voltage curve

uint32_t **vref**

Vref used by lookup table

const uint32_t ***low_curve**

Pointer to low Vref curve of lookup table (NULL if unused)

const uint32_t ***high_curve**

Pointer to high Vref curve of lookup table (NULL if unused)

Enumerations

enum esp_adc_cal_value_t

Type of calibration value used in characterization.

Values:

ESP_ADC_CAL_VAL_EFUSE_VREF = 0

Characterization based on reference voltage stored in eFuse

ESP_ADC_CAL_VAL_EFUSE_TP = 1

Characterization based on Two Point values stored in eFuse

ESP_ADC_CAL_VAL_DEFAULT_VREF = 2

Characterization based on default reference voltage

GPIO Lookup Macros

Header File

- soc/esp32/include/soc/adc_channel.h

Macros

ADC1_GPIO36_CHANNEL

ADC1_CHANNEL_0_GPIO_NUM

ADC1_GPIO37_CHANNEL

ADC1_CHANNEL_1_GPIO_NUM

ADC1_GPIO38_CHANNEL

ADC1_CHANNEL_2_GPIO_NUM

ADC1_GPIO39_CHANNEL

ADC1_CHANNEL_3_GPIO_NUM

ADC1_GPIO32_CHANNEL

ADC1_CHANNEL_4_GPIO_NUM

ADC1_GPIO33_CHANNEL

ADC1_CHANNEL_5_GPIO_NUM

ADC1_GPIO34_CHANNEL

ADC1_CHANNEL_6_GPIO_NUM

ADC1_GPIO35_CHANNEL

ADC1_CHANNEL_7_GPIO_NUM

ADC2_GPIO4_CHANNEL

ADC2_CHANNEL_0_GPIO_NUM

ADC2_GPIO0_CHANNEL

ADC2_CHANNEL_1_GPIO_NUM

ADC2_GPIO2_CHANNEL

ADC2_CHANNEL_2_GPIO_NUM

ADC2_GPIO15_CHANNEL

ADC2_CHANNEL_3_GPIO_NUM

ADC2_GPIO13_CHANNEL

ADC2_CHANNEL_4_GPIO_NUM

ADC2_GPIO12_CHANNEL

ADC2_CHANNEL_5_GPIO_NUM

ADC2_GPIO14_CHANNEL

ADC2_CHANNEL_6_GPIO_NUM

ADC2_GPIO27_CHANNEL

ADC2_CHANNEL_7_GPIO_NUM

ADC2_GPIO25_CHANNEL

ADC2_CHANNEL_8_GPIO_NUM

ADC2_GPIO26_CHANNEL

ADC2_CHANNEL_9_GPIO_NUM

3.3.2 Controller Area Network (CAN)

Overview

The ESP32' s peripherals contains a CAN Controller that supports Standard Frame Format (11-bit ID) and Extended Frame Format (29-bit ID) of the CAN2.0B specification.

警告: The ESP32 CAN controller is not compatible with CAN FD frames and will interpret such frames as errors.

This programming guide is split into the following sections:

1. *Basic CAN Concepts*
2. *Signals Lines and Transceiver*
3. *Configuration*
4. *Driver Operation*
5. *Examples*

Basic CAN Concepts

注解: The following section only covers the basic aspects of CAN. For full details, see the CAN2.0B specification

---

The CAN protocol is a multi-master, multi-cast communication protocol with error detection/signalling and inbuilt message prioritization. The CAN protocol is commonly used as a communication bus in automotive applications.

Multi-master: Any node in a CAN bus is allowed initiate the transfer of data.

Multi-cast: When a node transmits a message, all nodes are able to receive the message (broadcast). However some nodes can selective choose which messages to accept via the use of acceptance filtering (multi-cast).

Error Detection and Signalling: Every CAN node will constantly monitor the CAN bus. When any node detects an error, it will signal the error by transmitting an error frame. Other nodes will receive the error frame and transmit their own error frames in response. This will result in an error detection being propagated to all nodes on the bus.

Message Priorities: If two nodes attempt to transmit simultaneously, the node transmitting the message with the lower ID will win arbitration. All other nodes will become receivers ensuring there is at most one transmitter at any time.

CAN Message Frames

The CAN2.0B specification contains two frame formats known as **Extended Frame** and **Standard Frame** which contain 29-bit IDs and 11-bit IDs respectively. A CAN message consists of the following components

- 29-bit or 11-bit ID
- Data Length Code (DLC) between 0 to 8
- Up to 8 bytes of data (should match DLC)

Error States and Counters

The CAN2.0B specification implements fault confinement by requiring every CAN node to maintain two internal error counters known as the **Transmit Error Counter (TEC)** and the **Receive Error Counter (REC)**. The two error counters are used to determine a CAN node' s **error state**, and the counters are incremented and decremented following a set of rules (see CAN2.0B specification). These error states are known as **Error Active**, **Error Passive**, and **Bus-Off**.

Error Active: A CAN node is Error Active when **both TEC and REC are less than 128** and indicates a CAN node is operating normally. Error Active nodes are allowed to participate in CAN bus activities, and will actively signal any error conditions it detects by transmitting an **Active Error Flag** over the CAN bus.

Error Passive: A CAN node is Error Passive when **either the TEC or REC becomes greater than or equal to 128**. Error Passive nodes are still able to take part in CAN bus activities, but will instead transmit a **Passive Error Flag** upon detection of an error.

Bus-Off: A CAN node becomes Bus-Off when the **TEC becomes greater than or equal to 256**. A Bus-Off node is unable take part in CAN bus activity and will remain so until it undergoes bus recovery.

Signals Lines and Transceiver

The CAN controller does not contain a internal transceiver and therefore **requires an external transceiver** to operate. The type of external transceiver will depend on the application' s physical layer specification (e.g. using SN65HVD23X transceivers for ISO 11898-2 compatibility).

The CAN controller' s interface consists of 4 signal lines known as **TX, RX, BUS-OFF, and CLKOUT**. These four signal lines can be routed through the GPIO Matrix to GPIOs.

TX and RX: The TX and RX signal lines are required to interface with an external CAN transceiver. Both signal lines represent/interpret a dominant bit as a low logic level (0V), and a recessive bit as a high logic level (3.3V).

BUS-OFF: The BUS-OFF signal line is **optional** and is set to a low logic level (0V) whenever the CAN controller reaches a bus-off state. The BUS-OFF signal line is set to a high logic level (3.3V) otherwise.

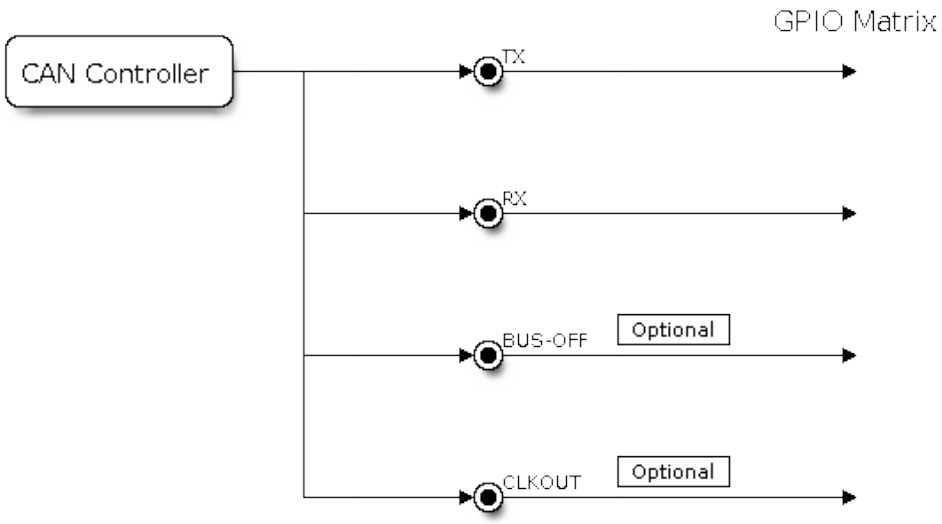

图 7: Signal lines of the CAN controller

CLKOUT: The CLKOUT signal line is **optional** and outputs a prescaled version of the CAN controller's source clock (APB Clock).

注解: An external transceiver **must internally tie the TX input and the RX output** such that a change in logic level to the TX signal line can be observed on the RX line. Failing to do so will cause the CAN controller to interpret differences in logic levels between the two signal lines as a lost in arbitration or a bit error.

Configuration

Operating Modes

The CAN driver supports the following modes of operations:

Normal Mode: The normal operating mode allows the CAN controller to take part in bus activities such as transmitting and receiving messages/error frames. Acknowledgement from another CAN node is required when transmitting message frames.

No Ack Mode: The No Acknowledgement mode is similar to normal mode, however acknowledgements are not required when transmitting message frames. This mode is useful when self testing the CAN controller.

Listen Only Mode: This mode will prevent the CAN controller from taking part in bus activities. Therefore transmissions of messages/acknowledgement/error frames will be disabled. However the the CAN controller

will still be able to receive messages (without acknowledging). This mode is suited for applications such as CAN bus monitoring.

Alerts

The CAN driver contains an alert feature which is used to notify the application level of certain CAN driver events. Alerts are selectively enabled when the CAN driver is installed, but can be reconfigured during runtime by calling *can_reconfigure_alerts()*. The application can then wait for any enabled alerts to occur by calling *can_read_alerts()*. The CAN driver supports the following alerts:

Alert	Description
CAN_ALERT_TX_IDLE	No more messages queued for transmission
CAN_ALERT_TX_SUCCESS	The previous transmission was successful
CAN_ALERT_BELOW_ERR_WARN	Both error counters have dropped below error warning limit
CAN_ALERT_ERR_ACTIVE	CAN controller has become error active
CAN_ALERT_RECOVERY_IN_PROGRESS	CAN controller is undergoing bus recovery
CAN_ALERT_BUS_RECOVERED	CAN controller has successfully completed bus recovery
CAN_ALERT_ARB_LOST	The previous transmission lost arbitration
CAN_ALERT_ABOVE_ERR_WARN	One of the error counters have exceeded the error warning limit
CAN_ALERT_BUS_ERROR	A (Bit, Stuff, CRC, Form, ACK) error has occurred on the bus
CAN_ALERT_TX_FAILED	The previous transmission has failed
CAN_ALERT_RX_QUEUE_FULL	The RX queue is full causing a received frame to be lost
CAN_ALERT_ERR_PASS	CAN controller has become error passive
CAN_ALERT_BUS_OFF	Bus-off condition occurred. CAN controller can no longer influence bus

---

注解: The **error warning limit** can be used to preemptively warn the application of bus errors before the error passive state is reached. By default the CAN driver sets the **error warning limit** to **96**. The CAN_ALERT_ABOVE_ERR_WARN is raised when the TEC or REC becomes larger then or equal to the error warning limit. The CAN_ALERT_BELOW_ERR_WARN is raised when both TEC and REC return back to values below **96**.

注解: When enabling alerts, the CAN_ALERT_AND_LOG flag can be used to cause the CAN driver to log any raised alerts to UART. However, alert logging is disabled and CAN_ALERT_AND_LOG if the *CONFIG_CAN_ISR_IN_IRAM* option is enabled (see *Placing ISR into IRAM*).

注解: The CAN_ALERT_ALL and CAN_ALERT_NONE macros can also be used to enable/disable all alerts during

configuration/reconfiguration.

Bit Timing

The operating bit rate of the CAN controller is configured using the *can_timing_config_t* structure. The period of each bit is made up of multiple **time quanta**, and the period of a **time quanta** is determined by a prescaled version of the CAN controller's source clock. A single bit contains the following segments in the following order:

1. The **Synchronization Segment** consists of a single time quanta
2. **Timing Segment 1** consists of 1 to 16 time quanta before sample point
3. **Timing Segment 2** consists of 1 to 8 time quanta after sample point

The **Baudrate Prescaler** is used to determine the period of each time quanta by dividing the CAN controller's source clock (80 MHz APB clock). The `brp` can be **any even number from 2 to 128**. If the ESP32 is a revision 2 or later chip, the `brp` will also support **any multiple of 4 from 132 to 256**, and can be enabled by setting the *CONFIG_ESP32_REV_MIN* to revision 2 or higher.

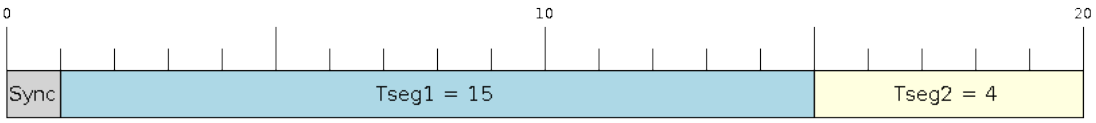

图 8: Bit timing configuration for 500kbit/s given BRP = 8

The sample point of a bit is located on the intersection of Timing Segment 1 and 2. Enabling **Triple Sampling** will cause 3 time quanta to be sampled per bit instead of 1 (extra samples are located at the tail end of Timing Segment 1).

The **Synchronization Jump Width** is used to determined the maximum number of time quanta a single bit time can be lengthened/shortened for synchronization purposes. `sjw` can **range from 1 to 4**.

注解: Multiple combinations of `brp`, `tseg_1`, `tseg_2`, and `sjw` can achieve the same bit rate. Users should tune these values to the physical characteristics of their CAN bus by taking into account factors such as **propagation delay, node information processing time, and phase errors**.

Bit timing **macro initializers** are also available for commonly used CAN bus bit rates. The following macro initializers are provided by the CAN driver.

- `CAN_TIMING_CONFIG_12_5KBITS()`
- `CAN_TIMING_CONFIG_16KBITS()`

- CAN_TIMING_CONFIG_20KBITS()
- CAN_TIMING_CONFIG_25KBITS()
- CAN_TIMING_CONFIG_50KBITS()
- CAN_TIMING_CONFIG_100KBITS()
- CAN_TIMING_CONFIG_125KBITS()
- CAN_TIMING_CONFIG_250KBITS()
- CAN_TIMING_CONFIG_500KBITS()
- CAN_TIMING_CONFIG_800KBITS()
- CAN_TIMING_CONFIG_1MBITS()

注解: The macro initializers for 12.5K, 16K, and 20K bit rates are only available for ESP32 revision 2 or later.

Acceptance Filter

The CAN controller contains a hardware acceptance filter which can be used to filter CAN messages of a particular ID. A node that filters out a message **will not receive the message, but will still acknowledge it**. Acceptances filters can make a node more efficient by filtering out messages sent over the CAN bus that are irrelevant to the CAN node in question. The CAN controller' s acceptance filter is configured using two 32-bit values within *can_filter_config_t* known as the **acceptance code** and the **acceptance mask**.

The **acceptance code** specifies the bit sequence which a message' s ID, RTR, and data bytes must match in order for the message to be received by the CAN controller. The **acceptance mask** is a bit sequence specifying which bits of the acceptance code can be ignored. This allows for a messages of different IDs to be accepted by a single acceptance code.

The acceptance filter can be used under **Single or Dual Filter Mode**. Single Filter Mode will use the acceptance code and mask to define a single filter. This allows for the first two data bytes of a standard frame to be filtered, or the entirety of an extended frame' s 29-bit ID. The following diagram illustrates how the 32-bit acceptance code and mask will be interpreted under Single Filter Mode (Note: The yellow and blue fields represent standard and extended CAN frames respectively).

Dual Filter Mode will use the acceptance code and mask to define two separate filters allowing for increased flexibility of ID' s to accept, but does not allow for all 29-bits of an extended ID to be filtered. The following diagram illustrates how the 32-bit acceptance code and mask will be interpreted under **Dual Filter Mode** (Note: The yellow and blue fields represent standard and extended CAN frames respectively).

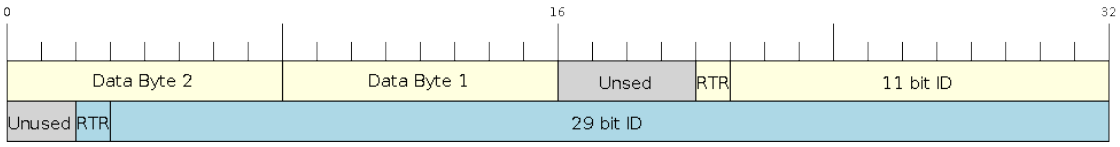

图 9: Bit layout of single filter mode (Right side MSBit)

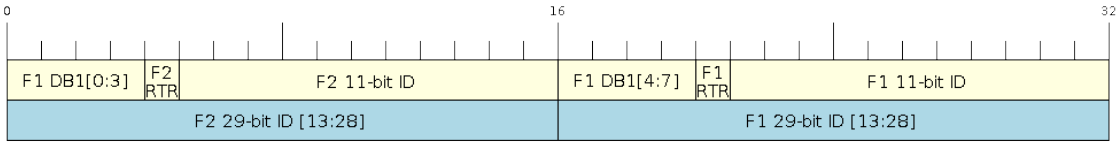

图 10: Bit layout of dual filter mode (Right side MSBit)

Disabling TX Queue

The TX queue can be disabled during configuration by setting the `tx_queue_len` member of *can_general_config_t* to `0`. This will allow applications that do not require message transmission to save a small amount of memory when using the CAN driver.

Placing ISR into IRAM

The CAN driver's ISR (Interrupt Service Routine) can be placed into IRAM so that the ISR can still run whilst the cache is disabled. Placing the ISR into IRAM may be necessary to maintain the CAN driver's functionality during lengthy cache disabling operations (such as SPI Flash writes, OTA updates etc). Whilst the cache is disabled, the ISR will continue to:

- Read received messages from the RX buffer and place them into the driver's RX queue.
- Load messages pending transmission from the driver's TX queue and write them into the TX buffer.

To place the CAN driver's ISR, users must do the following:

- Enable the *CONFIG_CAN_ISR_IN_IRAM* option using `idf.py menuconfig`.
- When calling *can_driver_install()*, the *intr_flags* member of *can_general_config_t* should set the *ESP_INTR_FLAG_IRAM* set.

注解: When the *CONFIG_CAN_ISR_IN_IRAM* option is enabled, the CAN driver will no longer log any alerts (i.e., the `CAN_ALERT_AND_LOG` flag will not have any effect).

Driver Operation

The CAN driver is designed with distinct states and strict rules regarding the functions or conditions that trigger a state transition. The following diagram illustrates the various states and their transitions.

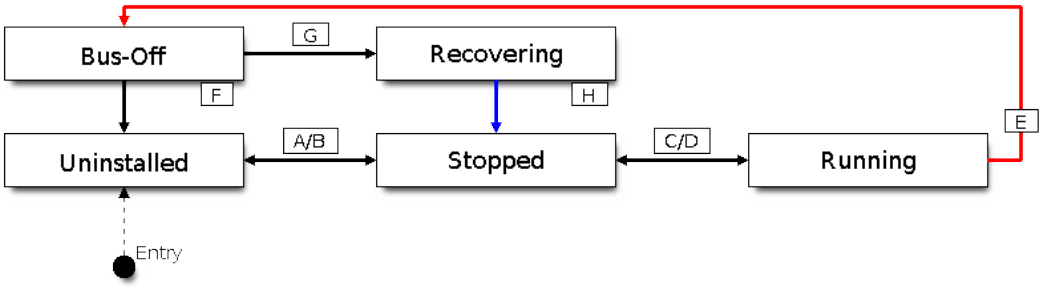

图 11: State transition diagram of the CAN driver (see table below)

Label	Transition	Action/Condition
A	Uninstalled -> Stopped	*can_driver_install()*
B	Stopped -> Uninstalled	*can_driver_uninstall()*
C	Stopped -> Running	*can_start()*
D	Running -> Stopped	*can_stop()*
E	Running -> Bus-Off	Transmit Error Counter >= 256
F	Bus-Off -> Uninstalled	*can_driver_uninstall()*
G	Bus-Off -> Recovering	*can_initiate_recovery()*
H	Recovering -> Stopped	128 occurrences of bus-free signal

Driver States

Uninstalled: In the uninstalled state, no memory is allocated for the driver and the CAN controller is powered OFF.

Stopped: In this state, the CAN controller is powered ON and the CAN driver has been installed. However the CAN controller will be unable to take part in any CAN bus activities such as transmitting, receiving, or acknowledging messages.

Running: In the running state, the CAN controller is able to take part in bus activities. Therefore messages can be transmitted/received/acknowledged. Furthermore the CAN controller will be able to transmit error frames upon detection of errors on the CAN bus.

Bus-Off: The bus-off state is automatically entered when the CAN controller' s Transmit Error Counter becomes greater than or equal to 256 (see CAN2.0B specification regarding error counter rules). The bus-off state indicates the occurrence of severe errors on the CAN bus or in the CAN controller. Whilst in the

bus-off state, the CAN controller will be unable to take part in any CAN bus activities. To exit the bus-off state, the CAN controller must undergo the bus recovery process.

Recovering: The recovering state is entered when the CAN driver undergoes bus recovery. The CAN driver/controller will remain in the recovering state until the 128 occurrences of the bus-free signal (see CAN2.0B specification) is observed on the CAN bus.

Message Flags

The CAN driver distinguishes different types of CAN messages by using the message flags in the `flags` field of *can_message_t*. These flags help distinguish whether a message is in standard or extended format, an RTR, and the type of transmission to use when transmitting such a message. The CAN driver supports the following flags:

Flag	Description
`CAN_MSG_FLAG_EXTD`	Message is in Extended Frame Format (29bit ID)
`CAN_MSG_FLAG_RTR`	Message is a Remote Transmit Request
`CAN_MSG_FLAG_SS`	Transmit message using Single Shot Transmission (Message will not be retransmitted upon error or loss of arbitration)
`CAN_MSG_FLAG_SELF`	Transmit message using Self Reception Request (Transmitted message will also received by the same node)
`CAN_MSG_FLAG_DLC_NON_COMP`	Message' s Data length code is larger than 8. This will break compliance with CAN2.0B

注解: The `CAN_MSG_FLAG_NONE` flag can be used for Standard Frame Format messages

Examples

Configuration & Installation

The following code snippet demonstrates how to configure, install, and start the CAN driver via the use of the various configuration structures, macro initializers, the *can_driver_install()* function, and the *can_start()* function.

```
#include "driver/gpio.h"
#include "driver/can.h"

void app_main()
{
```

(下页继续)

(续上页)

```
    //Initialize configuration structures using macro initializers
    can_general_config_t g_config = CAN_GENERAL_CONFIG_DEFAULT(GPIO_NUM_21, GPIO_NUM_22,␣
↪CAN_MODE_NORMAL);
    can_timing_config_t t_config = CAN_TIMING_CONFIG_500KBITS();
    can_filter_config_t f_config = CAN_FILTER_CONFIG_ACCEPT_ALL();

    //Install CAN driver
    if (can_driver_install(&g_config, &t_config, &f_config) == ESP_OK) {
        printf("Driver installed\n");
    } else {
        printf("Failed to install driver\n");
        return;
    }

    //Start CAN driver
    if (can_start() == ESP_OK) {
        printf("Driver started\n");
    } else {
        printf("Failed to start driver\n");
        return;
    }

    ...

}
```

The usage of macro initializers are not mandatory and each of the configuration structures can be manually.

Message Transmission

The following code snippet demonstrates how to transmit a message via the usage of the *can_message_t* type and *can_transmit()* function.

```
#include "driver/can.h"

...

//Configure message to transmit
can_message_t message;
message.identifier = 0xAAAA;
```

(下页继续)

(续上页)

```
message.flags = CAN_MSG_FLAG_EXTD;
message.data_length_code = 4;
for (int i = 0; i < 4; i++) {
    message.data[i] = 0;
}

//Queue message for transmission
if (can_transmit(&message, pdMS_TO_TICKS(1000)) == ESP_OK) {
    printf("Message queued for transmission\n");
} else {
    printf("Failed to queue message for transmission\n");
}
```

Message Reception

The following code snippet demonstrates how to receive a message via the usage of the *can_message_t* type and *can_receive()* function.

```
#include "driver/can.h"

...

//Wait for message to be received
can_message_t message;
if (can_receive(&message, pdMS_TO_TICKS(10000)) == ESP_OK) {
    printf("Message received\n");
} else {
    printf("Failed to receive message\n");
    return;
}

//Process received message
if (message.flags & CAN_MSG_FLAG_EXTD) {
    printf("Message is in Extended Format\n");
} else {
    printf("Message is in Standard Format\n");
}
printf("ID is %d\n", message.identifier);
if (!(message.flags & CAN_MSG_FLAG_RTR)) {
```

(下页继续)

(续上页)

```
    for (int i = 0; i < message.data_length_code; i++) {
        printf("Data byte %d = %d\n", i, message.data[i]);
    }
}
```

Reconfiguring and Reading Alerts

The following code snippet demonstrates how to reconfigure and read CAN driver alerts via the use of the *can_reconfigure_alerts()* and *can_read_alerts()* functions.

```
#include "driver/can.h"

...

//Reconfigure alerts to detect Error Passive and Bus-Off error states
uint32_t alerts_to_enable = CAN_ALERT_ERR_PASS | CAN_ALERT_BUS_OFF;
if (can_reconfigure_alerts(alerts_to_enable, NULL) == ESP_OK) {
    printf("Alerts reconfigured\n");
} else {
    printf("Failed to reconfigure alerts");
}

//Block indefinitely until an alert occurs
uint32_t alerts_triggered;
can_read_alerts(&alerts_triggered, portMAX_DELAY);
```

Stop and Uninstall

The following code demonstrates how to stop and uninstall the CAN driver via the use of the *can_stop()* and *can_driver_uninstall()* functions.

```
#include "driver/can.h"

...

//Stop the CAN driver
if (can_stop() == ESP_OK) {
    printf("Driver stopped\n");
} else {
```

(下页继续)

(续上页)

```
    printf("Failed to stop driver\n");
    return;
}

//Uninstall the CAN driver
if (can_driver_uninstall() == ESP_OK) {
    printf("Driver uninstalled\n");
} else {
    printf("Failed to uninstall driver\n");
    return;
}
```

Multiple ID Filter Configuration

The acceptance mask in *can_filter_config_t* can be configured such that two or more IDs will be accepted for a single filter. For a particular filter to accept multiple IDs, the conflicting bit positions amongst the IDs must be set in the acceptance mask. The acceptance code can be set to any one of the IDs.

The following example shows how the calculate the acceptance mask given multiple IDs:

```
ID1 =  11'b101 1010 0000
ID2 =  11'b101 1010 0001
ID3 =  11'b101 1010 0100
ID4 =  11'b101 1010 1000
//Acceptance Mask
MASK = 11'b000 0000 1101
```

Application Examples

Network Example: The CAN Network example demonstrates communication between two ESP32s using the CAN driver API. One CAN node acts as a network master initiate and ceasing the transfer of a data from another CAN node acting as a network slave. The example can be found via peripherals/can/can_network.

Alert and Recovery Example: This example demonstrates how to use the CAN driver' s alert and bus recovery API. The example purposely introduces errors on the CAN bus to put the CAN controller into the Bus-Off state. An alert is used to detect the Bus-Off state and trigger the bus recovery process. The example can be found via peripherals/can/can_alert_and_recovery.

Self Test Example: This example uses the No Acknowledge Mode and Self Reception Request to cause the CAN controller to send and simultaneously receive a series of messages. This example can be used to

verify if the connections between the CAN controller and the external transceiver are working correctly. The example can be found via peripherals/can/can_self_test.

API Reference

Header File

- driver/include/driver/can.h

Functions

esp_err_t **can_driver_install**(**const** *can_general_config_t* **g_config*, **const** *can_timing_config_t* **t_config*, **const** *can_filter_config_t* **f_config*)

Install CAN driver.

This function installs the CAN driver using three configuration structures. The required memory is allocated and the CAN driver is placed in the stopped state after running this function.

Note Macro initializers are available for the configuration structures (see documentation)

Note To reinstall the CAN driver, call can_driver_uninstall() first

Return

- ESP_OK: Successfully installed CAN driver
- ESP_ERR_INVALID_ARG: Arguments are invalid
- ESP_ERR_NO_MEM: Insufficient memory
- ESP_ERR_INVALID_STATE: Driver is already installed

Parameters

- `g_config`: General configuration structure
- `t_config`: Timing configuration structure
- `f_config`: Filter configuration structure

esp_err_t **can_driver_uninstall**()

Uninstall the CAN driver.

This function uninstalls the CAN driver, freeing the memory utilized by the driver. This function can only be called when the driver is in the stopped state or the bus-off state.

Warning The application must ensure that no tasks are blocked on TX/RX queues or alerts when this function is called.

Return

- ESP_OK: Successfully uninstalled CAN driver
- ESP_ERR_INVALID_STATE: Driver is not in stopped/bus-off state, or is not installed

esp_err_t **can_start()**

Start the CAN driver.

This function starts the CAN driver, putting the CAN driver into the running state. This allows the CAN driver to participate in CAN bus activities such as transmitting/receiving messages. The RX queue is reset in this function, clearing any unread messages. This function can only be called when the CAN driver is in the stopped state.

Return

- ESP_OK: CAN driver is now running
- ESP_ERR_INVALID_STATE: Driver is not in stopped state, or is not installed

esp_err_t **can_stop()**

Stop the CAN driver.

This function stops the CAN driver, preventing any further message from being transmitted or received until can_start() is called. Any messages in the TX queue are cleared. Any messages in the RX queue should be read by the application after this function is called. This function can only be called when the CAN driver is in the running state.

Warning A message currently being transmitted/received on the CAN bus will be ceased immediately. This may lead to other CAN nodes interpreting the unfinished message as an error.

Return

- ESP_OK: CAN driver is now Stopped
- ESP_ERR_INVALID_STATE: Driver is not in running state, or is not installed

esp_err_t **can_transmit(const** *can_message_t* ***message**, TickType_t *ticks_to_wait*)

Transmit a CAN message.

This function queues a CAN message for transmission. Transmission will start immediately if no other messages are queued for transmission. If the TX queue is full, this function will block until more space becomes available or until it timesout. If the TX queue is disabled (TX queue length = 0 in configuration), this function will return immediately if another message is undergoing transmission. This function can only be called when the CAN driver is in the running state and cannot be called under Listen Only Mode.

Note This function does not guarantee that the transmission is successful. The

TX_SUCCESS/TX_FAILED alert can be enabled to alert the application upon the success/failure of a transmission.

Note The TX_IDLE alert can be used to alert the application when no other messages are awaiting transmission.

Return

- ESP_OK: Transmission successfully queued/initiated
- ESP_ERR_INVALID_ARG: Arguments are invalid
- ESP_ERR_TIMEOUT: Timed out waiting for space on TX queue
- ESP_FAIL: TX queue is disabled and another message is currently transmitting
- ESP_ERR_INVALID_STATE: CAN driver is not in running state, or is not installed
- ESP_ERR_NOT_SUPPORTED: Listen Only Mode does not support transmissions

Parameters

- `message`: Message to transmit
- `ticks_to_wait`: Number of FreeRTOS ticks to block on the TX queue

esp_err_t **can_receive**(*can_message_t* **message*, TickType_t *ticks_to_wait*)

Receive a CAN message.

This function receives a message from the RX queue. The flags field of the message structure will indicate the type of message received. This function will block if there are no messages in the RX queue

Warning The flags field of the received message should be checked to determine if the received message contains any data bytes.

Return

- ESP_OK: Message successfully received from RX queue
- ESP_ERR_TIMEOUT: Timed out waiting for message
- ESP_ERR_INVALID_ARG: Arguments are invalid
- ESP_ERR_INVALID_STATE: CAN driver is not installed

Parameters

- `message`: Received message
- `ticks_to_wait`: Number of FreeRTOS ticks to block on RX queue

esp_err_t **can_read_alerts**(uint32_t **alerts*, TickType_t *ticks_to_wait*)

Read CAN driver alerts.

This function will read the alerts raised by the CAN driver. If no alert has been when this function is called, this function will block until an alert occurs or until it timeouts.

Note Multiple alerts can be raised simultaneously. The application should check for all alerts that have been enabled.

Return

- ESP_OK: Alerts read
- ESP_ERR_TIMEOUT: Timed out waiting for alerts
- ESP_ERR_INVALID_ARG: Arguments are invalid
- ESP_ERR_INVALID_STATE: CAN driver is not installed

Parameters

- `alerts`: Bit field of raised alerts (see documentation for alert flags)
- `ticks_to_wait`: Number of FreeRTOS ticks to block for alert

esp_err_t **can_reconfigure_alerts**(uint32_t *alerts_enabled*, uint32_t **current_alerts*)

Reconfigure which alerts are enabled.

This function reconfigures which alerts are enabled. If there are alerts which have not been read whilst reconfiguring, this function can read those alerts.

Return

- ESP_OK: Alerts reconfigured
- ESP_ERR_INVALID_STATE: CAN driver is not installed

Parameters

- `alerts_enabled`: Bit field of alerts to enable (see documentation for alert flags)
- `current_alerts`: Bit field of currently raised alerts. Set to NULL if unused

esp_err_t **can_initiate_recovery**()

Start the bus recovery process.

This function initiates the bus recovery process when the CAN driver is in the bus-off state. Once initiated, the CAN driver will enter the recovering state and wait for 128 occurrences of the bus-free signal on the CAN bus before returning to the stopped state. This function will reset the TX queue, clearing any messages pending transmission.

Note The BUS_RECOVERED alert can be enabled to alert the application when the bus recovery process completes.

Return

- ESP_OK: Bus recovery started
- ESP_ERR_INVALID_STATE: CAN driver is not in the bus-off state, or is not installed

esp_err_t **can_get_status_info**(*can_status_info_t* **status_info*)

Get current status information of the CAN driver.

Return

- ESP_OK: Status information retrieved
- ESP_ERR_INVALID_ARG: Arguments are invalid
- ESP_ERR_INVALID_STATE: CAN driver is not installed

Parameters

- `status_info`: Status information

esp_err_t **can_clear_transmit_queue**()

Clear the transmit queue.

This function will clear the transmit queue of all messages.

Note The transmit queue is automatically cleared when can_stop() or can_initiate_recovery() is called.

Return

- ESP_OK: Transmit queue cleared
- ESP_ERR_INVALID_STATE: CAN driver is not installed or TX queue is disabled

esp_err_t **can_clear_receive_queue**()

Clear the receive queue.

This function will clear the receive queue of all messages.

Note The receive queue is automatically cleared when can_start() is called.

Return

- ESP_OK: Transmit queue cleared
- ESP_ERR_INVALID_STATE: CAN driver is not installed

Structures

struct can_general_config_t

Structure for general configuration of the CAN driver.

Note Macro initializers are available for this structure

Public Members

can_mode_t **mode**
Mode of CAN controller

gpio_num_t **tx_io**
Transmit GPIO number

gpio_num_t **rx_io**
Receive GPIO number

gpio_num_t **clkout_io**
CLKOUT GPIO number (optional, set to -1 if unused)

gpio_num_t **bus_off_io**
Bus off indicator GPIO number (optional, set to -1 if unused)

uint32_t **tx_queue_len**
Number of messages TX queue can hold (set to 0 to disable TX Queue)

uint32_t **rx_queue_len**
Number of messages RX queue can hold

uint32_t **alerts_enabled**
Bit field of alerts to enable (see documentation)

uint32_t **clkout_divider**
CLKOUT divider. Can be 1 or any even number from 2 to 14 (optional, set to 0 if unused)

int **intr_flags**
Interrupt flags to set the priority of the driver' s ISR. Note that to use the ESP_INTR_FLAG_IRAM, the CONFIG_CAN_ISR_IN_IRAM option should be enabled first.

struct can_timing_config_t
Structure for bit timing configuration of the CAN driver.

Note Macro initializers are available for this structure

Public Members

uint32_t **brp**
Baudrate prescaler (i.e., APB clock divider) can be any even number from 2 to 128. For ESP32 Rev 2 or later, multiples of 4 from 132 to 256 are also supported

uint8_t **tseg_1**
Timing segment 1 (Number of time quanta, between 1 to 16)

uint8_t **tseg_2**

Timing segment 2 (Number of time quanta, 1 to 8)

uint8_t **sjw**

Synchronization Jump Width (Max time quanta jump for synchronize from 1 to 4)

bool **triple_sampling**

Enables triple sampling when the CAN controller samples a bit

struct can_filter_config_t

Structure for acceptance filter configuration of the CAN driver (see documentation)

Note Macro initializers are available for this structure

Public Members

uint32_t **acceptance_code**

32-bit acceptance code

uint32_t **acceptance_mask**

32-bit acceptance mask

bool **single_filter**

Use Single Filter Mode (see documentation)

struct can_status_info_t

Structure to store status information of CAN driver.

Public Members

can_state_t **state**

Current state of CAN controller (Stopped/Running/Bus-Off/Recovery)

uint32_t **msgs_to_tx**

Number of messages queued for transmission or awaiting transmission completion

uint32_t **msgs_to_rx**

Number of messages in RX queue waiting to be read

uint32_t **tx_error_counter**

Current value of Transmit Error Counter

uint32_t **rx_error_counter**

Current value of Receive Error Counter

uint32_t **tx_failed_count**

Number of messages that failed transmissions

uint32_t **rx_missed_count**

Number of messages that were lost due to a full RX queue

uint32_t **arb_lost_count**

Number of instances arbitration was lost

uint32_t **bus_error_count**

Number of instances a bus error has occurred

struct can_message_t

Structure to store a CAN message.

Note The flags member is used to control the message type, and transmission type (see documentation for message flags)

Public Members

uint32_t **flags**

Bit field of message flags indicates frame/transmission type (see documentation)

uint32_t **identifier**

11 or 29 bit identifier

uint8_t **data_length_code**

Data length code

uint8_t **data**[**CAN_MAX_DATA_LEN**]

Data bytes (not relevant in RTR frame)

Enumerations

enum can_mode_t

CAN driver operating modes.

Values:

CAN_MODE_NORMAL

Normal operating mode where CAN controller can send/receive/acknowledge messages

CAN_MODE_NO_ACK

Transmission does not require acknowledgment. Use this mode for self testing

CAN_MODE_LISTEN_ONLY

The CAN controller will not influence the bus (No transmissions or acknowledgments) but can receive messages

enum can_state_t

CAN driver states.

Values:

`CAN_STATE_STOPPED`
: Stopped state. The CAN controller will not participate in any CAN bus activities

`CAN_STATE_RUNNING`
: Running state. The CAN controller can transmit and receive messages

`CAN_STATE_BUS_OFF`
: Bus-off state. The CAN controller cannot participate in bus activities until it has recovered

`CAN_STATE_RECOVERING`
: Recovering state. The CAN controller is undergoing bus recovery

3.3.3 Digital To Analog Converter

Overview

ESP32 has two 8-bit DAC (digital to analog converter) channels, connected to GPIO25 (Channel 1) and GPIO26 (Channel 2).

The DAC driver allows these channels to be set to arbitrary voltages.

The DAC channels can also be driven with DMA-style written sample data, via the *I2S driver* when using the "built-in DAC mode".

For other analog output options, see the *Sigma-delta Modulation module* and the *LED Control module*. Both these modules produce high frequency PWM output, which can be hardware low-pass filtered in order to generate a lower frequency analog output.

Application Example

Setting DAC channel 1 (GPIO 25) voltage to approx 0.78 of VDD_A voltage (VDD * 200 / 255). For VDD_A 3.3V, this is 2.59V:

```
#include <driver/dac.h>

...

    dac_output_enable(DAC_CHANNEL_1);
    dac_output_voltage(DAC_CHANNEL_1, 200);
```

API Reference

Header File

- driver/include/driver/dac.h

Functions

esp_err_t **dac_pad_get_io_num**(*dac_channel_t channel*, *gpio_num_t *gpio_num*)

Get the gpio number of a specific DAC channel.

Return

- ESP_OK if success
- ESP_ERR_INVALID_ARG if channal not valid

Parameters

- `channel`: Channel to get the gpio number
- `gpio_num`: output buffer to hold the gpio number

esp_err_t **dac_output_voltage**(*dac_channel_t channel*, uint8_t *dac_value*)

Set DAC output voltage.

DAC output is 8-bit. Maximum (255) corresponds to VDD.

Note Need to configure DAC pad before calling this function. DAC channel 1 is attached to GPIO25, DAC channel 2 is attached to GPIO26

Return

- ESP_OK success
- ESP_ERR_INVALID_ARG Parameter error

Parameters

- `channel`: DAC channel
- `dac_value`: DAC output value

esp_err_t **dac_output_enable**(*dac_channel_t channel*)

DAC pad output enable.

Note DAC channel 1 is attached to GPIO25, DAC channel 2 is attached to GPIO26 I2S left channel will be mapped to DAC channel 2 I2S right channel will be mapped to DAC channel 1

Parameters

- `channel`: DAC channel

esp_err_t **dac_output_disable**(*dac_channel_t channel*)

DAC pad output disable.

Note DAC channel 1 is attached to GPIO25, DAC channel 2 is attached to GPIO26

Parameters

- `channel`: DAC channel

esp_err_t **dac_i2s_enable**()

Enable DAC output data from I2S.

esp_err_t **dac_i2s_disable**()

Disable DAC output data from I2S.

Enumerations

enum dac_channel_t

Values:

DAC_CHANNEL_1 = 1

DAC channel 1 is GPIO25

DAC_CHANNEL_2

DAC channel 2 is GPIO26

DAC_CHANNEL_MAX

GPIO Lookup Macros

Some useful macros can be used to specified the GPIO number of a DAC channel, or vice versa. e.g.

1. `DAC_CHANNEL_1_GPIO_NUM` is the GPIO number of channel 1 (25);
2. `DAC_GPIO26_CHANNEL` is the channel number of GPIO 26 (channel 2).

Header File

- soc/esp32/include/soc/dac_channel.h

Macros

DAC_GPIO25_CHANNEL

DAC_CHANNEL_1_GPIO_NUM

DAC_GPIO26_CHANNEL

DAC_CHANNEL_2_GPIO_NUM

3.3.4 GPIO & RTC GPIO

Overview

The ESP32 chip features 40 physical GPIO pads. Some GPIO pads cannot be used or do not have the corresponding pin on the chip package(refer to technical reference manual). Each pad can be used as a general purpose I/O or can be connected to an internal peripheral signal.

- Note that GPIO6-11 are usually used for SPI flash.
- GPIO34-39 can only be set as input mode and do not have software pullup or pulldown functions.

There is also separate "RTC GPIO" support, which functions when GPIOs are routed to the "RTC" low-power and analog subsystem. These pin functions can be used when in deep sleep, when the *Ultra Low Power co-processor* is running, or when analog functions such as ADC/DAC/etc are in use.

Application Example

GPIO output and input interrupt example: peripherals/gpio.

API Reference - Normal GPIO

Header File

- driver/include/driver/gpio.h

Functions

esp_err_t **gpio_config**(**const** *gpio_config_t* ***pGPIOConfig**)

GPIO common configuration.

Configure GPIO' s Mode,pull-up,PullDown,IntrType

Return

- ESP_OK success
- ESP_ERR_INVALID_ARG Parameter error

Parameters

- **pGPIOConfig**: Pointer to GPIO configure struct

esp_err_t **gpio_reset_pin**(*gpio_num_t gpio_num*)

Reset an gpio to default state (select gpio function, enable pullup and disable input and output).

Note This function also configures the IOMUX for this pin to the GPIO function, and disconnects any other peripheral output configured via GPIO Matrix.

Return Always return ESP_OK.

Parameters

- `gpio_num`: GPIO number.

esp_err_t **gpio_set_intr_type**(*gpio_num_t gpio_num*, *gpio_int_type_t intr_type*)

GPIO set interrupt trigger type.

Return

- ESP_OK Success
- ESP_ERR_INVALID_ARG Parameter error

Parameters

- `gpio_num`: GPIO number. If you want to set the trigger type of e.g. of GPIO16, gpio_num should be GPIO_NUM_16 (16);
- `intr_type`: Interrupt type, select from gpio_int_type_t

esp_err_t **gpio_intr_enable**(*gpio_num_t gpio_num*)

Enable GPIO module interrupt signal.

Note Please do not use the interrupt of GPIO36 and GPIO39 when using ADC or Wi-Fi with sleep mode enabled. Please refer to the comments of `adc1_get_raw`. Please refer to section 3.11 of 'ECO_and_Workarounds_for_Bugs_in_ESP32' for the description of this issue. As a workaround, call adc_power_acquire() in the app. This will result in higher power consumption (by ~1mA), but will remove the glitches on GPIO36 and GPIO39.

Return

- ESP_OK Success
- ESP_ERR_INVALID_ARG Parameter error

Parameters

- `gpio_num`: GPIO number. If you want to enable an interrupt on e.g. GPIO16, gpio_num should be GPIO_NUM_16 (16);

esp_err_t **gpio_intr_disable**(*gpio_num_t gpio_num*)

Disable GPIO module interrupt signal.

Return

- ESP_OK success
- ESP_ERR_INVALID_ARG Parameter error

Parameters

- `gpio_num`: GPIO number. If you want to disable the interrupt of e.g. GPIO16, gpio_num should be GPIO_NUM_16 (16);

esp_err_t **gpio_set_level**(*gpio_num_t gpio_num*, uint32_t *level*)

GPIO set output level.

Return

- ESP_OK Success
- ESP_ERR_INVALID_ARG GPIO number error

Parameters

- `gpio_num`: GPIO number. If you want to set the output level of e.g. GPIO16, gpio_num should be GPIO_NUM_16 (16);
- `level`: Output level. 0: low ; 1: high

int **gpio_get_level**(*gpio_num_t gpio_num*)

GPIO get input level.

Warning If the pad is not configured for input (or input and output) the returned value is always 0.

Return

- 0 the GPIO input level is 0
- 1 the GPIO input level is 1

Parameters

- `gpio_num`: GPIO number. If you want to get the logic level of e.g. pin GPIO16, gpio_num should be GPIO_NUM_16 (16);

esp_err_t **gpio_set_direction**(*gpio_num_t gpio_num*, *gpio_mode_t mode*)

GPIO set direction.

Configure GPIO direction,such as output_only,input_only,output_and_input

Return

- ESP_OK Success
- ESP_ERR_INVALID_ARG GPIO error

Parameters

- `gpio_num`: Configure GPIO pins number, it should be GPIO number. If you want to set direction of e.g. GPIO16, gpio_num should be GPIO_NUM_16 (16);
- `mode`: GPIO direction

esp_err_t **gpio_set_pull_mode**(*gpio_num_t gpio_num*, *gpio_pull_mode_t pull*)

Configure GPIO pull-up/pull-down resistors.

Only pins that support both input & output have integrated pull-up and pull-down resistors. Input-only GPIOs 34-39 do not.

Return

- ESP_OK Success
- ESP_ERR_INVALID_ARG : Parameter error

Parameters

- `gpio_num`: GPIO number. If you want to set pull up or down mode for e.g. GPIO16, gpio_num should be GPIO_NUM_16 (16);
- `pull`: GPIO pull up/down mode.

esp_err_t **gpio_wakeup_enable**(*gpio_num_t gpio_num*, *gpio_int_type_t intr_type*)

Enable GPIO wake-up function.

Return

- ESP_OK Success
- ESP_ERR_INVALID_ARG Parameter error

Parameters

- `gpio_num`: GPIO number.
- `intr_type`: GPIO wake-up type. Only GPIO_INTR_LOW_LEVEL or GPIO_INTR_HIGH_LEVEL can be used.

esp_err_t **gpio_wakeup_disable**(*gpio_num_t gpio_num*)

Disable GPIO wake-up function.

Return

- ESP_OK Success
- ESP_ERR_INVALID_ARG Parameter error

Parameters

- `gpio_num`: GPIO number

esp_err_t **gpio_isr_register**(void (**fn*))void *
, void **arg*, int *intr_alloc_flags*, *gpio_isr_handle_t* **handle*Register GPIO interrupt handler, the handler is an ISR. The handler will be attached to the same CPU core that this function is running on.

This ISR function is called whenever any GPIO interrupt occurs. See the alternative gpio_install_isr_service() and gpio_isr_handler_add() API in order to have the driver support per-GPIO ISRs.

To disable or remove the ISR, pass the returned handle to the *interrupt allocation functions*.

Parameters

- `fn`: Interrupt handler function.
- `intr_alloc_flags`: Flags used to allocate the interrupt. One or multiple (ORred) ESP_INTR_FLAG_* values. See esp_intr_alloc.h for more info.
- `arg`: Parameter for handler function
- `handle`: Pointer to return handle. If non-NULL, a handle for the interrupt will be returned here.

Return

- ESP_OK Success ;
- ESP_ERR_INVALID_ARG GPIO error
- ESP_ERR_NOT_FOUND No free interrupt found with the specified flags

esp_err_t **gpio_pullup_en**(*gpio_num_t gpio_num*)
Enable pull-up on GPIO.

Return

- ESP_OK Success
- ESP_ERR_INVALID_ARG Parameter error

Parameters

- `gpio_num`: GPIO number

esp_err_t **gpio_pullup_dis**(*gpio_num_t gpio_num*)
Disable pull-up on GPIO.

Return

- ESP_OK Success

- ESP_ERR_INVALID_ARG Parameter error

Parameters

- gpio_num: GPIO number

esp_err_t **gpio_pulldown_en**(*gpio_num_t gpio_num*)

Enable pull-down on GPIO.

Return

- ESP_OK Success
- ESP_ERR_INVALID_ARG Parameter error

Parameters

- gpio_num: GPIO number

esp_err_t **gpio_pulldown_dis**(*gpio_num_t gpio_num*)

Disable pull-down on GPIO.

Return

- ESP_OK Success
- ESP_ERR_INVALID_ARG Parameter error

Parameters

- gpio_num: GPIO number

esp_err_t **gpio_install_isr_service**(int *intr_alloc_flags*)

Install the driver's GPIO ISR handler service, which allows per-pin GPIO interrupt handlers.

This function is incompatible with gpio_isr_register() - if that function is used, a single global ISR is registered for all GPIO interrupts. If this function is used, the ISR service provides a global GPIO ISR and individual pin handlers are registered via the gpio_isr_handler_add() function.

Return

- ESP_OK Success
- ESP_ERR_NO_MEM No memory to install this service
- ESP_ERR_INVALID_STATE ISR service already installed.
- ESP_ERR_NOT_FOUND No free interrupt found with the specified flags
- ESP_ERR_INVALID_ARG GPIO error

Parameters

- `intr_alloc_flags`: Flags used to allocate the interrupt. One or multiple (ORred) ESP_INTR_FLAG_* values. See esp_intr_alloc.h for more info.

void **gpio_uninstall_isr_service**()

Uninstall the driver' s GPIO ISR service, freeing related resources.

esp_err_t **gpio_isr_handler_add**(*gpio_num_t gpio_num*, *gpio_isr_t isr_handler*, void **args*)

Add ISR handler for the corresponding GPIO pin.

Call this function after using gpio_install_isr_service() to install the driver' s GPIO ISR handler service.

The pin ISR handlers no longer need to be declared with IRAM_ATTR, unless you pass the ESP_INTR_FLAG_IRAM flag when allocating the ISR in gpio_install_isr_service().

This ISR handler will be called from an ISR. So there is a stack size limit (configurable as "ISR stack size" in menuconfig). This limit is smaller compared to a global GPIO interrupt handler due to the additional level of indirection.

Return

- ESP_OK Success
- ESP_ERR_INVALID_STATE Wrong state, the ISR service has not been initialized.
- ESP_ERR_INVALID_ARG Parameter error

Parameters

- `gpio_num`: GPIO number
- `isr_handler`: ISR handler function for the corresponding GPIO number.
- `args`: parameter for ISR handler.

esp_err_t **gpio_isr_handler_remove**(*gpio_num_t gpio_num*)

Remove ISR handler for the corresponding GPIO pin.

Return

- ESP_OK Success
- ESP_ERR_INVALID_STATE Wrong state, the ISR service has not been initialized.
- ESP_ERR_INVALID_ARG Parameter error

Parameters

- `gpio_num`: GPIO number

esp_err_t **gpio_set_drive_capability**(*gpio_num_t gpio_num*, *gpio_drive_cap_t strength*)

Set GPIO pad drive capability.

Return

- ESP_OK Success
- ESP_ERR_INVALID_ARG Parameter error

Parameters

- `gpio_num`: GPIO number, only support output GPIOs
- `strength`: Drive capability of the pad

esp_err_t **gpio_get_drive_capability**(*gpio_num_t gpio_num*, *gpio_drive_cap_t *strength*)

Get GPIO pad drive capability.

Return

- ESP_OK Success
- ESP_ERR_INVALID_ARG Parameter error

Parameters

- `gpio_num`: GPIO number, only support output GPIOs
- `strength`: Pointer to accept drive capability of the pad

esp_err_t **gpio_hold_en**(*gpio_num_t gpio_num*)

Enable gpio pad hold function.

The gpio pad hold function works in both input and output modes, but must be output-capable gpios. If pad hold enabled: in output mode: the output level of the pad will be force locked and can not be changed. in input mode: the input value read will not change, regardless the changes of input signal.

The state of digital gpio cannot be held during Deep-sleep, and it will resume the hold function when the chip wakes up from Deep-sleep. If the digital gpio also needs to be held during Deep-sleep, `gpio_deep_sleep_hold_en` should also be called.

Power down or call gpio_hold_dis will disable this function.

Return

- ESP_OK Success
- ESP_ERR_NOT_SUPPORTED Not support pad hold function

Parameters

- `gpio_num`: GPIO number, only support output-capable GPIOs

esp_err_t **gpio_hold_dis**(*gpio_num_t gpio_num*)

Disable gpio pad hold function.

When the chip is woken up from Deep-sleep, the gpio will be set to the default mode, so, the gpio will output the default level if this function is called. If you dont' t want the level changes, the gpio should be configured to a known state before this function is called. e.g. If you hold gpio18 high during Deep-sleep, after the chip is woken up and `gpio_hold_dis` is called, gpio18 will output low level(because gpio18 is input mode by default). If you don' t want this behavior, you should configure gpio18 as output mode and set it to hight level before calling `gpio_hold_dis`.

Return

- ESP_OK Success
- ESP_ERR_NOT_SUPPORTED Not support pad hold function

Parameters

- `gpio_num`: GPIO number, only support output-capable GPIOs

void **gpio_deep_sleep_hold_en**(void)

Enable all digital gpio pad hold function during Deep-sleep.

When the chip is in Deep-sleep mode, all digital gpio will hold the state before sleep, and when the chip is woken up, the status of digital gpio will not be held. Note that the pad hold feature only works when the chip is in Deep-sleep mode, when not in sleep mode, the digital gpio state can be changed even you have called this function.

Power down or call gpio_hold_dis will disable this function, otherwise, the digital gpio hold feature works as long as the chip enter Deep-sleep.

void **gpio_deep_sleep_hold_dis**(void)

Disable all digital gpio pad hold function during Deep-sleep.

void **gpio_iomux_in**(uint32_t *gpio_num*, uint32_t *signal_idx*)

Set pad input to a peripheral signal through the IOMUX.

Parameters

- `gpio_num`: GPIO number of the pad.
- `signal_idx`: Peripheral signal id to input. One of the `*_IN_IDX` signals in `soc/gpio_sig_map.h`.

void **gpio_iomux_out**(uint8_t *gpio_num*, int *func*, bool *oen_inv*)

Set peripheral output to an GPIO pad through the IOMUX.

Parameters

- `gpio_num`: gpio_num GPIO number of the pad.
- `func`: The function number of the peripheral pin to output pin. One of the `FUNC_X_*` of specified pin (X) in `soc/io_mux_reg.h`.

- `oen_inv`: True if the output enable needs to be inversed, otherwise False.

Structures

struct gpio_config_t

Configuration parameters of GPIO pad for gpio_config function.

Public Members

uint64_t **pin_bit_mask**

GPIO pin: set with bit mask, each bit maps to a GPIO

gpio_mode_t **mode**

GPIO mode: set input/output mode

gpio_pullup_t **pull_up_en**

GPIO pull-up

gpio_pulldown_t **pull_down_en**

GPIO pull-down

gpio_int_type_t **intr_type**

GPIO interrupt type

Macros

GPIO_SEL_0

Pin 0 selected

GPIO_SEL_1

Pin 1 selected

GPIO_SEL_2

Pin 2 selected

Note There are more macros like that up to pin 39, excluding pins 20, 24 and 28..31. They are not shown here to reduce redundant information.

GPIO_IS_VALID_GPIO(gpio_num)

Check whether it is a valid GPIO number

GPIO_IS_VALID_OUTPUT_GPIO(gpio_num)

Check whether it can be a valid GPIO number of output mode

Type Definitions

typedef void (*gpio_isr_t)(void *)

typedef *intr_handle_t* gpio_isr_handle_t

Enumerations

enum gpio_num_t

Values:

GPIO_NUM_0 = 0

GPIO0, input and output

GPIO_NUM_1 = 1

GPIO1, input and output

GPIO_NUM_2 = 2

GPIO2, input and output

Note There are more enumerations like that up to GPIO39, excluding GPIO20, GPIO24 and GPIO28..31. They are not shown here to reduce redundant information.

Note GPIO34..39 are input mode only.

enum gpio_int_type_t

Values:

GPIO_INTR_DISABLE = 0

Disable GPIO interrupt

GPIO_INTR_POSEDGE = 1

GPIO interrupt type : rising edge

GPIO_INTR_NEGEDGE = 2

GPIO interrupt type : falling edge

GPIO_INTR_ANYEDGE = 3

GPIO interrupt type : both rising and falling edge

GPIO_INTR_LOW_LEVEL = 4

GPIO interrupt type : input low level trigger

GPIO_INTR_HIGH_LEVEL = 5

GPIO interrupt type : input high level trigger

GPIO_INTR_MAX

enum gpio_mode_t

Values:

`GPIO_MODE_DISABLE` = GPIO_MODE_DEF_DISABLE
GPIO mode : disable input and output

`GPIO_MODE_INPUT` = GPIO_MODE_DEF_INPUT
GPIO mode : input only

`GPIO_MODE_OUTPUT` = GPIO_MODE_DEF_OUTPUT
GPIO mode : output only mode

`GPIO_MODE_OUTPUT_OD` = ((GPIO_MODE_DEF_OUTPUT)|(GPIO_MODE_DEF_OD))
GPIO mode : output only with open-drain mode

`GPIO_MODE_INPUT_OUTPUT_OD` = ((GPIO_MODE_DEF_INPUT)|(GPIO_MODE_DEF_OUTPUT)|(GPIO_MODE
GPIO mode : output and input with open-drain mode

`GPIO_MODE_INPUT_OUTPUT` = ((GPIO_MODE_DEF_INPUT)|(GPIO_MODE_DEF_OUTPUT))
GPIO mode : output and input mode

`enum gpio_pullup_t`
Values:

`GPIO_PULLUP_DISABLE` = 0x0
Disable GPIO pull-up resistor

`GPIO_PULLUP_ENABLE` = 0x1
Enable GPIO pull-up resistor

`enum gpio_pulldown_t`
Values:

`GPIO_PULLDOWN_DISABLE` = 0x0
Disable GPIO pull-down resistor

`GPIO_PULLDOWN_ENABLE` = 0x1
Enable GPIO pull-down resistor

`enum gpio_pull_mode_t`
Values:

`GPIO_PULLUP_ONLY`
Pad pull up

`GPIO_PULLDOWN_ONLY`
Pad pull down

`GPIO_PULLUP_PULLDOWN`
Pad pull up + pull down

`GPIO_FLOATING`
Pad floating

enum gpio_drive_cap_t

Values:

GPIO_DRIVE_CAP_0 = 0

Pad drive capability: weak

GPIO_DRIVE_CAP_1 = 1

Pad drive capability: stronger

GPIO_DRIVE_CAP_2 = 2

Pad drive capability: default value

GPIO_DRIVE_CAP_DEFAULT = 2

Pad drive capability: default value

GPIO_DRIVE_CAP_3 = 3

Pad drive capability: strongest

GPIO_DRIVE_CAP_MAX

API Reference - RTC GPIO

Header File

- driver/include/driver/rtc_io.h

Functions

static bool rtc_gpio_is_valid_gpio(*gpio_num_t gpio_num*)

Determine if the specified GPIO is a valid RTC GPIO.

Return true if GPIO is valid for RTC GPIO use. false otherwise.

Parameters

- gpio_num: GPIO number

esp_err_t rtc_gpio_init(*gpio_num_t gpio_num*)

Init a GPIO as RTC GPIO.

This function must be called when initializing a pad for an analog function.

Return

- ESP_OK success
- ESP_ERR_INVALID_ARG GPIO is not an RTC IO

Parameters

- `gpio_num`: GPIO number (e.g. GPIO_NUM_12)

esp_err_t **rtc_gpio_deinit**(*gpio_num_t gpio_num*)

Init a GPIO as digital GPIO.

Return

- ESP_OK success
- ESP_ERR_INVALID_ARG GPIO is not an RTC IO

Parameters

- `gpio_num`: GPIO number (e.g. GPIO_NUM_12)

uint32_t **rtc_gpio_get_level**(*gpio_num_t gpio_num*)

Get the RTC IO input level.

Return

- 1 High level
- 0 Low level
- ESP_ERR_INVALID_ARG GPIO is not an RTC IO

Parameters

- `gpio_num`: GPIO number (e.g. GPIO_NUM_12)

esp_err_t **rtc_gpio_set_level**(*gpio_num_t gpio_num*, uint32_t *level*)

Set the RTC IO output level.

Return

- ESP_OK Success
- ESP_ERR_INVALID_ARG GPIO is not an RTC IO

Parameters

- `gpio_num`: GPIO number (e.g. GPIO_NUM_12)
- `level`: output level

esp_err_t **rtc_gpio_set_direction**(*gpio_num_t gpio_num*, *rtc_gpio_mode_t mode*)

RTC GPIO set direction.

Configure RTC GPIO direction, such as output only, input only, output and input.

Return

- ESP_OK Success

- ESP_ERR_INVALID_ARG GPIO is not an RTC IO

Parameters

- `gpio_num`: GPIO number (e.g. GPIO_NUM_12)
- `mode`: GPIO direction

esp_err_t **rtc_gpio_pullup_en**(*gpio_num_t gpio_num*)

RTC GPIO pullup enable.

This function only works for RTC IOs. In general, call gpio_pullup_en, which will work both for normal GPIOs and RTC IOs.

Return

- ESP_OK Success
- ESP_ERR_INVALID_ARG GPIO is not an RTC IO

Parameters

- `gpio_num`: GPIO number (e.g. GPIO_NUM_12)

esp_err_t **rtc_gpio_pulldown_en**(*gpio_num_t gpio_num*)

RTC GPIO pulldown enable.

This function only works for RTC IOs. In general, call gpio_pulldown_en, which will work both for normal GPIOs and RTC IOs.

Return

- ESP_OK Success
- ESP_ERR_INVALID_ARG GPIO is not an RTC IO

Parameters

- `gpio_num`: GPIO number (e.g. GPIO_NUM_12)

esp_err_t **rtc_gpio_pullup_dis**(*gpio_num_t gpio_num*)

RTC GPIO pullup disable.

This function only works for RTC IOs. In general, call gpio_pullup_dis, which will work both for normal GPIOs and RTC IOs.

Return

- ESP_OK Success
- ESP_ERR_INVALID_ARG GPIO is not an RTC IO

Parameters

- `gpio_num`: GPIO number (e.g. GPIO_NUM_12)

esp_err_t **rtc_gpio_pulldown_dis**(*gpio_num_t gpio_num*)

RTC GPIO pulldown disable.

This function only works for RTC IOs. In general, call gpio_pulldown_dis, which will work both for normal GPIOs and RTC IOs.

Return

- ESP_OK Success
- ESP_ERR_INVALID_ARG GPIO is not an RTC IO

Parameters

- `gpio_num`: GPIO number (e.g. GPIO_NUM_12)

esp_err_t **rtc_gpio_hold_en**(*gpio_num_t gpio_num*)

Enable hold function on an RTC IO pad.

Enabling HOLD function will cause the pad to latch current values of input enable, output enable, output value, function, drive strength values. This function is useful when going into light or deep sleep mode to prevent the pin configuration from changing.

Return

- ESP_OK Success
- ESP_ERR_INVALID_ARG GPIO is not an RTC IO

Parameters

- `gpio_num`: GPIO number (e.g. GPIO_NUM_12)

esp_err_t **rtc_gpio_hold_dis**(*gpio_num_t gpio_num*)

Disable hold function on an RTC IO pad.

Disabling hold function will allow the pad receive the values of input enable, output enable, output value, function, drive strength from RTC_IO peripheral.

Return

- ESP_OK Success
- ESP_ERR_INVALID_ARG GPIO is not an RTC IO

Parameters

- `gpio_num`: GPIO number (e.g. GPIO_NUM_12)

esp_err_t **rtc_gpio_isolate**(*gpio_num_t gpio_num*)

Helper function to disconnect internal circuits from an RTC IO This function disables input, output, pullup, pulldown, and enables hold feature for an RTC IO. Use this function if an RTC IO needs to be disconnected from internal circuits in deep sleep, to minimize leakage current.

In particular, for ESP32-WROVER module, call rtc_gpio_isolate(GPIO_NUM_12) before entering deep sleep, to reduce deep sleep current.

Return

- ESP_OK on success
- ESP_ERR_INVALID_ARG if GPIO is not an RTC IO

Parameters

- **gpio_num**: GPIO number (e.g. GPIO_NUM_12).

void **rtc_gpio_force_hold_dis_all**()

Disable force hold signal for all RTC IOs.

Each RTC pad has a "force hold" input signal from the RTC controller. If this signal is set, pad latches current values of input enable, function, output enable, and other signals which come from the RTC mux. Force hold signal is enabled before going into deep sleep for pins which are used for EXT1 wakeup.

esp_err_t **rtc_gpio_set_drive_capability**(*gpio_num_t gpio_num*, *gpio_drive_cap_t strength*)

Set RTC GPIO pad drive capability.

Return

- ESP_OK Success
- ESP_ERR_INVALID_ARG Parameter error

Parameters

- **gpio_num**: GPIO number, only support output GPIOs
- **strength**: Drive capability of the pad

esp_err_t **rtc_gpio_get_drive_capability**(*gpio_num_t gpio_num*, *gpio_drive_cap_t *strength*)

Get RTC GPIO pad drive capability.

Return

- ESP_OK Success
- ESP_ERR_INVALID_ARG Parameter error

Parameters

- **gpio_num**: GPIO number, only support output GPIOs

- `strength`: Pointer to accept drive capability of the pad

esp_err_t **rtc_gpio_wakeup_enable**(*gpio_num_t gpio_num*, *gpio_int_type_t intr_type*)

Enable wakeup from sleep mode using specific GPIO.

Return

- ESP_OK on success
- ESP_ERR_INVALID_ARG if gpio_num is not an RTC IO, or intr_type is not one of GPIO_INTR_HIGH_LEVEL, GPIO_INTR_LOW_LEVEL.

Parameters

- `gpio_num`: GPIO number
- `intr_type`: Wakeup on high level (GPIO_INTR_HIGH_LEVEL) or low level (GPIO_INTR_LOW_LEVEL)

esp_err_t **rtc_gpio_wakeup_disable**(*gpio_num_t gpio_num*)

Disable wakeup from sleep mode using specific GPIO.

Return

- ESP_OK on success
- ESP_ERR_INVALID_ARG if gpio_num is not an RTC IO

Parameters

- `gpio_num`: GPIO number

Macros

RTC_GPIO_IS_VALID_GPIO(gpio_num)

Enumerations

enum rtc_gpio_mode_t

Values:

RTC_GPIO_MODE_INPUT_ONLY

Pad input

RTC_GPIO_MODE_OUTPUT_ONLY

Pad output

RTC_GPIO_MODE_INPUT_OUTPUT

Pad pull input + output

`RTC_GPIO_MODE_DISABLED`
Pad (output + input) disable

3.3.5 I2C

An I2C (Inter-Integrated Circuit) bus can be used for communication with several external devices connected to the same bus as ESP32. There are two I2C controllers on board of the ESP32, each of which can be set to master mode or slave mode.

Overview

The following sections will walk you through typical steps to configure and operate the I2C driver:

1. *Configure Driver* - select driver' s parameters like master or slave mode, set specific GPIO pins to act as SDA and SCL, set the clock speed, etc.
2. *Install Driver*- activate driver in master or slave mode to operate on one of the two I2C controllers available on ESP32.
3. *Run Communication*:
   a) *Master Mode* - run communication acting as a master
   b) *Slave Mode* - get slave responding to messages from the master
4. *Interrupt Handling* - configure and service I2C interrupts.
5. *Going Beyond Defaults* - adjust timing, pin configuration and other parameters of the I2C communication.
6. *Error Handling* - how to recognize and handle driver configuration and communication errors.
7. *Delete Driver*- on communication end to free resources used by the I2C driver.

The top level identification of an I2C driver is one of the two port numbers selected from *i2c_port_t*. The mode of operation for a given port is provided during driver configuration by selecting either "master" or "slave" from *i2c_mode_t*.

Configure Driver

The first step to establishing I2C communication is to configure the driver. This is done by setting several parameters contained in *i2c_config_t* structure:

- I2C **operation mode** - select either slave or master from *i2c_opmode_t*
- Settings of the **communication pins**:
  - GPIO pin numbers assigned to the SDA and SCL signals
  - Whether to enable ESP32' s internal pull up for respective pins

- I2C **clock speed**, if this configuration concerns the master mode
- If this configuration concerns the slave mode:
  - Whether **10 bit address mode** should be enabled
  - The **slave address**

Then, to initialize configuration for a given I2C port, call function *i2c_param_config()* with the port number and *i2c_config_t* structure as the function call parameters.

At this stage *i2c_param_config()* also sets "behind the scenes"couple of other I2C configuration parameters to commonly used default values. To check what are the values and how to change them, see *Going Beyond Defaults*.

Install Driver

Having the configuration initialized, the next step is to install the I2C driver by calling *i2c_driver_install()*. This function call requires the following parameters:

- The port number, one of the two ports available, selected from *i2c_port_t*
- The operation mode, slave or master selected from *i2c_opmode_t*
- Sizes of buffers that will be allocated for sending and receiving data **in the slave mode**
- Flags used to allocate the interrupt

Run Communication

With the I2C driver installed, ESP32 is ready to communicate with other I2C devices. Programming of communication depends on whether selected I2C port operates in a master or a slave mode.

Master Mode

ESP32' s I2C port working in the master made is responsible for establishing communication with slave I2C devices and sending commands to trigger actions by slaves, like doing a measurement and sending back a result.

To organize this process the driver provides a container, called a "command link" , that should be populated with a sequence of commands and then passed to the I2C controller for execution.

Master Write

An example of building a commend link for I2C master sending n bytes to slave is shown below:

The following describes how the command link for a "master write" is set up and what comes inside:

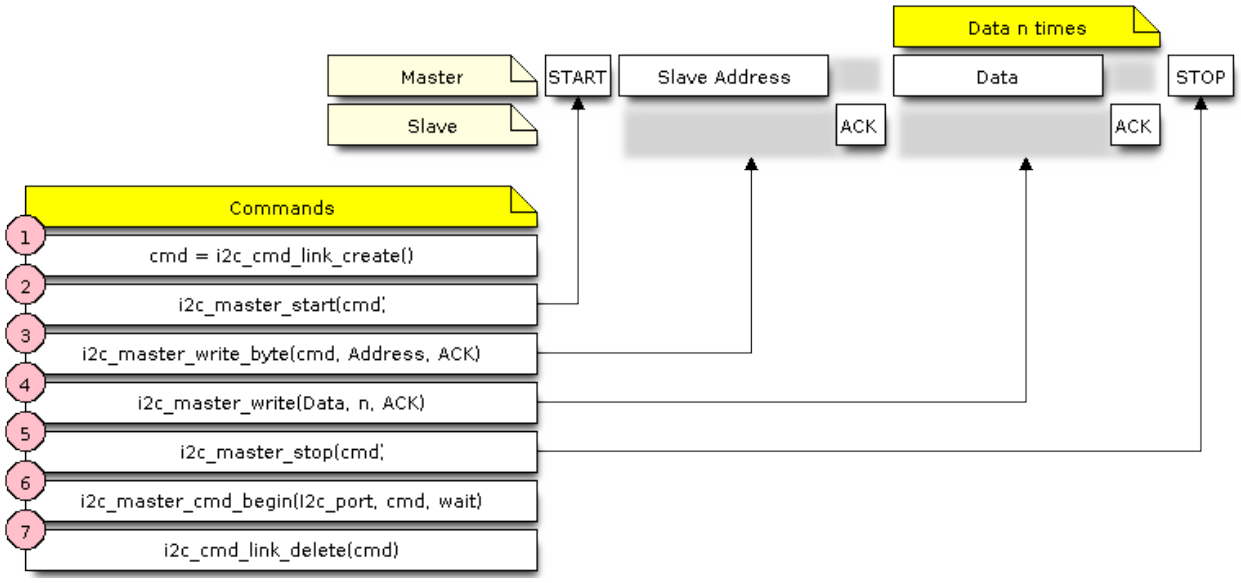

图 12: I2C command link - master write example

1. The first step is to create a command link with *i2c_cmd_link_create()*.

   Then the command link is populated with series of data to be sent to the slave:

   2. **Start bit** - *i2c_master_start()*
   3. Single byte **slave address** - *i2c_master_write_byte()*. The address is provided as an argument of this function call.
   4. One or more bytes of **data** as an argument of *i2c_master_write()*.
   5. **Stop bit** - *i2c_master_stop()*

   Both *i2c_master_write_byte()* and *i2c_master_write()* commands have additional argument defining whether slave should **acknowledge** received data or not.

6. Execution of command link by I2C controller is triggered by calling *i2c_master_cmd_begin()*.
7. As the last step, after sending of the commands is finished, the resources used by the command link are released by calling *i2c_cmd_link_delete()*.

Master Read

There is a similar sequence of steps for the master to read the data from a slave.

When reading the data, instead of "i2c_master_read…", the command link is populated with *i2c_master_read_byte()* and / or *i2c_master_read()*. Also, the last read is configured for not providing an acknowledge by the master.

Master Write or Read?

After sending a slave's address, see step 3 on pictures above, the master either writes to or reads from the slave. The information what the master will actually do is hidden in the least significant bit of the slave's

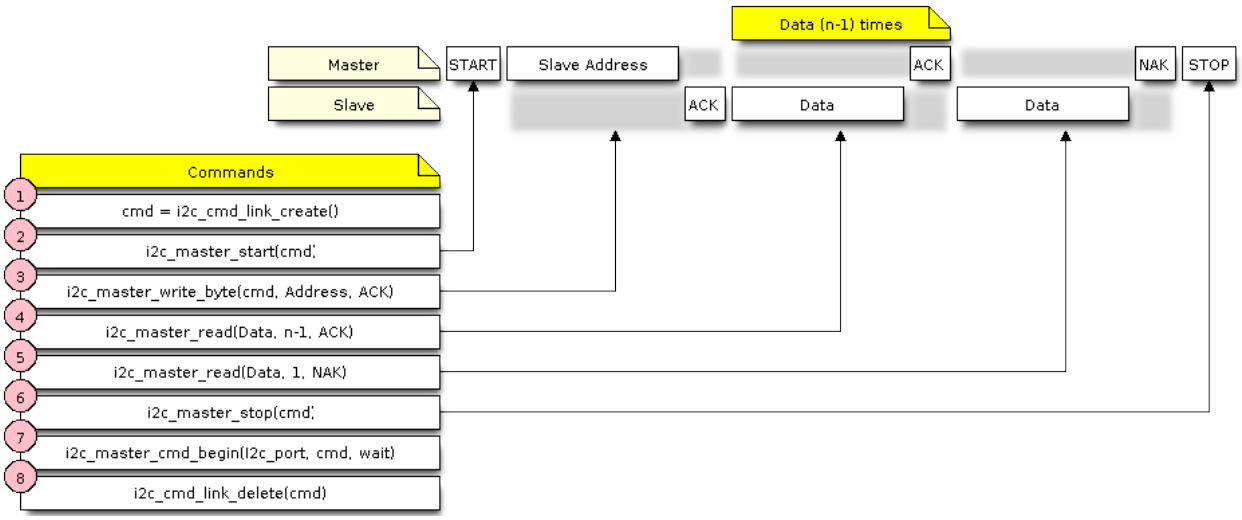

图 13: I2C command link - master read example

address.

Therefore the command link instructing the slave that the master will write the data contains the address like `(ESP_SLAVE_ADDR << 1) | I2C_MASTER_WRITE` and looks as follows:

```
i2c_master_write_byte(cmd, (ESP_SLAVE_ADDR << 1) | I2C_MASTER_WRITE, ACK_CHECK_EN)
```

By similar token the command link to read from the slave looks as follows:

```
i2c_master_write_byte(cmd, (ESP_SLAVE_ADDR << 1) | I2C_MASTER_READ, ACK_CHECK_EN)
```

Slave Mode

The API provides functions to read and write data by the slave - * *i2c_slave_read_buffer()* and *i2c_slave_write_buffer()*. An example of using these functions is provided in peripherals/i2c.

Interrupt Handling

To register an interrupt handler, call function *i2c_isr_register()*, to delete the handler call *i2c_isr_free()*. Description of interrupts triggered by I2C controller is provided in the ESP32 Technical Reference Manual (PDF).

Going Beyond Defaults

There are couple of I2C communication parameters setup during driver configuration (when calling *i2c_param_config()*, see *Configure Driver*), to some default commonly used values. Some parameters

are also already configured in registers of the I2C controller. These parameters can be changed to user defined values by calling dedicated functions:

- Period of SCL pulses being high and low - *i2c_set_period()*
- SCL and SDA signal timing used during generation of start / stop signals - *i2c_set_start_timing()* / *i2c_set_stop_timing()*
- Timing relationship between SCL and SDA signals when sampling by slave, as well as when transmitting by master - *i2c_set_data_timing()*
- I2C timeout - *i2c_set_timeout()*

  注解: The timing values are defined in APB clock cycles. The frequency of APB is specified in `I2C_APB_CLK_FREQ`.

- What bit, LSB or MSB, is transmitted / received first - *i2c_set_data_mode()* selectable out of modes defined in *i2c_trans_mode_t*

Each one of the above functions has a *_get_* counterpart to check the currently set value.

To see the default values of parameters setup during driver configuration, please refer to file driver/i2c.c looking up defines with `_DEFAULT` suffix.

With function *i2c_set_pin()* it is also possible to select different SDA and SCL pins and alter configuration of pull ups, changing what has been already entered with *i2c_param_config()*.

注解: ESP32' s internal pull ups are in the range of some tens of kOhm, and as such in most cases insufficient for use as I2C pull ups by themselves. We suggest to add external pull ups as well, with values as described in the I2C standard.

Error Handling

Most of driver' s function return the `ESP_OK` on successful completion or a specific error code on a failure. It is a good practice to always check the returned values and implement the error handling. The driver is also printing out log messages, when e.g. checking the correctness of entered configuration, that contain explanation of errors. For details please refer to file driver/i2c.c looking up defines with `_ERR_STR` suffix.

Use dedicated interrupts to capture communication failures. For instance there is `I2C_TIME_OUT_INT` interrupt triggered when I2C takes too long to receive data. See *Interrupt Handling* for related information.

To reset internal hardware buffers in case of communication failure, you can use *i2c_reset_tx_fifo()* and *i2c_reset_rx_fifo()*.

Delete Driver

If the I2C communication is established with *i2c_driver_install()* for some specific period of time and then not required, the driver may be removed to free allocated resources by calling *i2c_driver_delete()*.

Application Example

I2C master and slave example: peripherals/i2c.

API Reference

Header File

- driver/include/driver/i2c.h

Functions

esp_err_t **i2c_driver_install**(*i2c_port_t i2c_num*, *i2c_mode_t mode*, size_t *slv_rx_buf_len*, size_t *slv_tx_buf_len*, int *intr_alloc_flags*)

I2C driver install.

Note Only slave mode will use this value, driver will ignore this value in master mode.

Note Only slave mode will use this value, driver will ignore this value in master mode.

Note In master mode, if the cache is likely to be disabled(such as write flash) and the slave is time-sensitive, `ESP_INTR_FLAG_IRAM` is suggested to be used. In this case, please use the memory allocated from internal RAM in i2c read and write function, because we can not access the psram(if psram is enabled) in interrupt handle function when cache is disabled.

Return

- ESP_OK Success
- ESP_ERR_INVALID_ARG Parameter error
- ESP_FAIL Driver install error

Parameters

- `i2c_num`: I2C port number
- `mode`: I2C mode(master or slave)
- `slv_rx_buf_len`: receiving buffer size for slave mode

Parameters

- `slv_tx_buf_len`: sending buffer size for slave mode

Parameters

- `intr_alloc_flags`: Flags used to allocate the interrupt. One or multiple (ORred) ESP_INTR_FLAG_* values. See esp_intr_alloc.h for more info.

esp_err_t **i2c_driver_delete**(*i2c_port_t i2c_num*)

I2C driver delete.

Return

- ESP_OK Success
- ESP_ERR_INVALID_ARG Parameter error

Parameters

- `i2c_num`: I2C port number

esp_err_t **i2c_param_config**(*i2c_port_t i2c_num*, **const** *i2c_config_t* **i2c_conf*)

I2C parameter initialization.

Return

- ESP_OK Success
- ESP_ERR_INVALID_ARG Parameter error

Parameters

- `i2c_num`: I2C port number
- `i2c_conf`: pointer to I2C parameter settings

esp_err_t **i2c_reset_tx_fifo**(*i2c_port_t i2c_num*)

reset I2C tx hardware fifo

Return

- ESP_OK Success
- ESP_ERR_INVALID_ARG Parameter error

Parameters

- `i2c_num`: I2C port number

esp_err_t **i2c_reset_rx_fifo**(*i2c_port_t i2c_num*)

reset I2C rx fifo

Return

- ESP_OK Success

- ESP_ERR_INVALID_ARG Parameter error

Parameters

- `i2c_num`: I2C port number

esp_err_t **i2c_isr_register**(*i2c_port_t i2c_num*, void (***fn*))void *
, void **arg*, int *intr_alloc_flags*, *intr_handle_t* **handle*I2C isr handler register.

Return

- ESP_OK Success
- ESP_ERR_INVALID_ARG Parameter error

Parameters

- `i2c_num`: I2C port number
- `fn`: isr handler function
- `arg`: parameter for isr handler function
- `intr_alloc_flags`: Flags used to allocate the interrupt. One or multiple (ORred) ESP_INTR_FLAG_* values. See esp_intr_alloc.h for more info.
- `handle`: handle return from esp_intr_alloc.

esp_err_t **i2c_isr_free**(*intr_handle_t handle*)
to delete and free I2C isr.

Return

- ESP_OK Success
- ESP_ERR_INVALID_ARG Parameter error

Parameters

- `handle`: handle of isr.

esp_err_t **i2c_set_pin**(*i2c_port_t i2c_num*, int *sda_io_num*, int *scl_io_num*, *gpio_pullup_t sda_pullup_en*, *gpio_pullup_t scl_pullup_en*, *i2c_mode_t mode*)
Configure GPIO signal for I2C sck and sda.

Return

- ESP_OK Success
- ESP_ERR_INVALID_ARG Parameter error

Parameters

- `i2c_num`: I2C port number

- `sda_io_num`: GPIO number for I2C sda signal
- `scl_io_num`: GPIO number for I2C scl signal
- `sda_pullup_en`: Whether to enable the internal pullup for sda pin
- `scl_pullup_en`: Whether to enable the internal pullup for scl pin
- `mode`: I2C mode

i2c_cmd_handle_t **i2c_cmd_link_create()**

Create and init I2C command link.

Note Before we build I2C command link, we need to call i2c_cmd_link_create() to create a command link. After we finish sending the commands, we need to call i2c_cmd_link_delete() to release and return the resources.

Return i2c command link handler

void **i2c_cmd_link_delete**(*i2c_cmd_handle_t cmd_handle*)

Free I2C command link.

Note Before we build I2C command link, we need to call i2c_cmd_link_create() to create a command link. After we finish sending the commands, we need to call i2c_cmd_link_delete() to release and return the resources.

Parameters

- `cmd_handle`: I2C command handle

esp_err_t **i2c_master_start**(*i2c_cmd_handle_t cmd_handle*)

Queue command for I2C master to generate a start signal.

Note Only call this function in I2C master mode Call i2c_master_cmd_begin() to send all queued commands

Return

- ESP_OK Success
- ESP_ERR_INVALID_ARG Parameter error

Parameters

- `cmd_handle`: I2C cmd link

esp_err_t **i2c_master_write_byte**(*i2c_cmd_handle_t cmd_handle*, uint8_t *data*, bool *ack_en*)

Queue command for I2C master to write one byte to I2C bus.

Note Only call this function in I2C master mode Call i2c_master_cmd_begin() to send all queued commands

Return

- ESP_OK Success
- ESP_ERR_INVALID_ARG Parameter error

Parameters

- `cmd_handle`: I2C cmd link
- `data`: I2C one byte command to write to bus
- `ack_en`: enable ack check for master

esp_err_t **i2c_master_write**(*i2c_cmd_handle_t cmd_handle*, uint8_t *data, size_t *data_len*, bool *ack_en*)

Queue command for I2C master to write buffer to I2C bus.

Note Only call this function in I2C master mode Call i2c_master_cmd_begin() to send all queued commands

Note If the psram is enabled and intr_flag is `ESP_INTR_FLAG_IRAM`, please use the memory allocated from internal RAM.

Return

- ESP_OK Success
- ESP_ERR_INVALID_ARG Parameter error

Parameters

- `cmd_handle`: I2C cmd link
- `data`: data to send

Parameters

- `data_len`: data length
- `ack_en`: enable ack check for master

esp_err_t **i2c_master_read_byte**(*i2c_cmd_handle_t cmd_handle*, uint8_t *data, *i2c_ack_type_t ack*)

Queue command for I2C master to read one byte from I2C bus.

Note Only call this function in I2C master mode Call i2c_master_cmd_begin() to send all queued commands

Note If the psram is enabled and intr_flag is `ESP_INTR_FLAG_IRAM`, please use the memory allocated from internal RAM.

Return

- ESP_OK Success

- ESP_ERR_INVALID_ARG Parameter error

Parameters

- `cmd_handle`: I2C cmd link
- `data`: pointer accept the data byte

Parameters

- `ack`: ack value for read command

esp_err_t **i2c_master_read**(*i2c_cmd_handle_t cmd_handle*, uint8_t **data*, size_t *data_len*, *i2c_ack_type_t ack*)

Queue command for I2C master to read data from I2C bus.

Note Only call this function in I2C master mode Call i2c_master_cmd_begin() to send all queued commands

Note If the psram is enabled and intr_flag is `ESP_INTR_FLAG_IRAM`, please use the memory allocated from internal RAM.

Return

- ESP_OK Success
- ESP_ERR_INVALID_ARG Parameter error

Parameters

- `cmd_handle`: I2C cmd link
- `data`: data buffer to accept the data from bus

Parameters

- `data_len`: read data length
- `ack`: ack value for read command

esp_err_t **i2c_master_stop**(*i2c_cmd_handle_t cmd_handle*)

Queue command for I2C master to generate a stop signal.

Note Only call this function in I2C master mode Call i2c_master_cmd_begin() to send all queued commands

Return

- ESP_OK Success
- ESP_ERR_INVALID_ARG Parameter error

Parameters

- `cmd_handle`: I2C cmd link

esp_err_t **i2c_master_cmd_begin**(*i2c_port_t i2c_num*, *i2c_cmd_handle_t cmd_handle*, TickType_t *ticks_to_wait*)

I2C master send queued commands. This function will trigger sending all queued commands. The task will be blocked until all the commands have been sent out. The I2C APIs are not thread-safe, if you want to use one I2C port in different tasks, you need to take care of the multi-thread issue.

Note Only call this function in I2C master mode

Return

- ESP_OK Success
- ESP_ERR_INVALID_ARG Parameter error
- ESP_FAIL Sending command error, slave doesn't ACK the transfer.
- ESP_ERR_INVALID_STATE I2C driver not installed or not in master mode.
- ESP_ERR_TIMEOUT Operation timeout because the bus is busy.

Parameters

- `i2c_num`: I2C port number
- `cmd_handle`: I2C command handler
- `ticks_to_wait`: maximum wait ticks.

int **i2c_slave_write_buffer**(*i2c_port_t i2c_num*, uint8_t **data*, int *size*, TickType_t *ticks_to_wait*)

I2C slave write data to internal ringbuffer, when tx fifo empty, isr will fill the hardware fifo from the internal ringbuffer.

Note Only call this function in I2C slave mode

Return

- ESP_FAIL(-1) Parameter error
- Others(>=0) The number of data bytes that pushed to the I2C slave buffer.

Parameters

- `i2c_num`: I2C port number
- `data`: data pointer to write into internal buffer
- `size`: data size
- `ticks_to_wait`: Maximum waiting ticks

int **i2c_slave_read_buffer**(*i2c_port_t i2c_num*, uint8_t **data*, size_t *max_size*, TickType_t *ticks_to_wait*)

I2C slave read data from internal buffer. When I2C slave receive data, isr will copy received data from hardware rx fifo to internal ringbuffer. Then users can read from internal ringbuffer.

Note Only call this function in I2C slave mode

Return

- ESP_FAIL(-1) Parameter error
- Others(>=0) The number of data bytes that read from I2C slave buffer.

Parameters

- `i2c_num`: I2C port number
- `data`: data pointer to write into internal buffer
- `max_size`: Maximum data size to read
- `ticks_to_wait`: Maximum waiting ticks

esp_err_t **i2c_set_period**(*i2c_port_t i2c_num*, int *high_period*, int *low_period*)

set I2C master clock period

Return

- ESP_OK Success
- ESP_ERR_INVALID_ARG Parameter error

Parameters

- `i2c_num`: I2C port number
- `high_period`: clock cycle number during SCL is high level, high_period is a 14 bit value
- `low_period`: clock cycle number during SCL is low level, low_period is a 14 bit value

esp_err_t **i2c_get_period**(*i2c_port_t i2c_num*, int **high_period*, int **low_period*)

get I2C master clock period

Return

- ESP_OK Success
- ESP_ERR_INVALID_ARG Parameter error

Parameters

- `i2c_num`: I2C port number
- `high_period`: pointer to get clock cycle number during SCL is high level, will get a 14 bit value
- `low_period`: pointer to get clock cycle number during SCL is low level, will get a 14 bit value

esp_err_t **i2c_filter_enable**(*i2c_port_t i2c_num*, uint8_t *cyc_num*)

enable hardware filter on I2C bus Sometimes the I2C bus is disturbed by high frequency noise(about 20ns), or the rising edge of the SCL clock is very slow, these may cause the master state machine broken. enable hardware filter can filter out high frequency interference and make the master more stable.

Note Enable filter will slow the SCL clock.

Return

- ESP_OK Success
- ESP_ERR_INVALID_ARG Parameter error

Parameters

- `i2c_num`: I2C port number
- `cyc_num`: the APB cycles need to be filtered(0<= cyc_num <=7). When the period of a pulse is less than cyc_num * APB_cycle, the I2C controller will ignore this pulse.

esp_err_t **i2c_filter_disable**(*i2c_port_t i2c_num*)

disable filter on I2C bus

Return

- ESP_OK Success
- ESP_ERR_INVALID_ARG Parameter error

Parameters

- `i2c_num`: I2C port number

esp_err_t **i2c_set_start_timing**(*i2c_port_t i2c_num*, int *setup_time*, int *hold_time*)

set I2C master start signal timing

Return

- ESP_OK Success
- ESP_ERR_INVALID_ARG Parameter error

Parameters

- `i2c_num`: I2C port number
- `setup_time`: clock number between the falling-edge of SDA and rising-edge of SCL for start mark, it’ s a 10-bit value.
- `hold_time`: clock num between the falling-edge of SDA and falling-edge of SCL for start mark, it’ s a 10-bit value.

esp_err_t **i2c_get_start_timing**(*i2c_port_t i2c_num*, int **setup_time*, int **hold_time*)
get I2C master start signal timing

Return

- ESP_OK Success
- ESP_ERR_INVALID_ARG Parameter error

Parameters

- `i2c_num`: I2C port number
- `setup_time`: pointer to get setup time
- `hold_time`: pointer to get hold time

esp_err_t **i2c_set_stop_timing**(*i2c_port_t i2c_num*, int *setup_time*, int *hold_time*)
set I2C master stop signal timing

Return

- ESP_OK Success
- ESP_ERR_INVALID_ARG Parameter error

Parameters

- `i2c_num`: I2C port number
- `setup_time`: clock num between the rising-edge of SCL and the rising-edge of SDA, it's a 10-bit value.
- `hold_time`: clock number after the STOP bit's rising-edge, it's a 14-bit value.

esp_err_t **i2c_get_stop_timing**(*i2c_port_t i2c_num*, int **setup_time*, int **hold_time*)
get I2C master stop signal timing

Return

- ESP_OK Success
- ESP_ERR_INVALID_ARG Parameter error

Parameters

- `i2c_num`: I2C port number
- `setup_time`: pointer to get setup time.
- `hold_time`: pointer to get hold time.

esp_err_t **i2c_set_data_timing**(*i2c_port_t i2c_num*, int *sample_time*, int *hold_time*)
set I2C data signal timing

Return

- ESP_OK Success
- ESP_ERR_INVALID_ARG Parameter error

Parameters

- `i2c_num`: I2C port number
- `sample_time`: clock number I2C used to sample data on SDA after the rising-edge of SCL, it's a 10-bit value
- `hold_time`: clock number I2C used to hold the data after the falling-edge of SCL, it's a 10-bit value

esp_err_t **i2c_get_data_timing**(*i2c_port_t i2c_num*, int **sample_time*, int **hold_time*)

get I2C data signal timing

Return

- ESP_OK Success
- ESP_ERR_INVALID_ARG Parameter error

Parameters

- `i2c_num`: I2C port number
- `sample_time`: pointer to get sample time
- `hold_time`: pointer to get hold time

esp_err_t **i2c_set_timeout**(*i2c_port_t i2c_num*, int *timeout*)

set I2C timeout value

Return

- ESP_OK Success
- ESP_ERR_INVALID_ARG Parameter error

Parameters

- `i2c_num`: I2C port number
- `timeout`: timeout value for I2C bus (unit: APB 80Mhz clock cycle)

esp_err_t **i2c_get_timeout**(*i2c_port_t i2c_num*, int **timeout*)

get I2C timeout value

Return

- ESP_OK Success

- ESP_ERR_INVALID_ARG Parameter error

Parameters

- `i2c_num`: I2C port number
- `timeout`: pointer to get timeout value

esp_err_t **i2c_set_data_mode**(*i2c_port_t i2c_num*, *i2c_trans_mode_t tx_trans_mode*, *i2c_trans_mode_t rx_trans_mode*)

set I2C data transfer mode

Return

- ESP_OK Success
- ESP_ERR_INVALID_ARG Parameter error

Parameters

- `i2c_num`: I2C port number
- `tx_trans_mode`: I2C sending data mode
- `rx_trans_mode`: I2C receving data mode

esp_err_t **i2c_get_data_mode**(*i2c_port_t i2c_num*, *i2c_trans_mode_t *tx_trans_mode*, *i2c_trans_mode_t *rx_trans_mode*)

get I2C data transfer mode

Return

- ESP_OK Success
- ESP_ERR_INVALID_ARG Parameter error

Parameters

- `i2c_num`: I2C port number
- `tx_trans_mode`: pointer to get I2C sending data mode
- `rx_trans_mode`: pointer to get I2C receiving data mode

Structures

`struct i2c_config_t`

I2C initialization parameters.

Public Members

i2c_mode_t **mode**
I2C mode

gpio_num_t **sda_io_num**
GPIO number for I2C sda signal

gpio_pullup_t **sda_pullup_en**
Internal GPIO pull mode for I2C sda signal

gpio_num_t **scl_io_num**
GPIO number for I2C scl signal

gpio_pullup_t **scl_pullup_en**
Internal GPIO pull mode for I2C scl signal

uint32_t **clk_speed**
I2C clock frequency for master mode, (no higher than 1MHz for now)

uint8_t **addr_10bit_en**
I2C 10bit address mode enable for slave mode

uint16_t **slave_addr**
I2C address for slave mode

Macros

`I2C_APB_CLK_FREQ`
I2C source clock is APB clock, 80MHz

`I2C_FIFO_LEN`
I2C hardware fifo length

Type Definitions

typedef void ***i2c_cmd_handle_t**
I2C command handle

Enumerations

enum i2c_mode_t
Values:

`I2C_MODE_SLAVE` = 0
I2C slave mode

`I2C_MODE_MASTER`
I2C master mode

`I2C_MODE_MAX`

`enum i2c_rw_t`
Values:

`I2C_MASTER_WRITE` = 0
I2C write data

`I2C_MASTER_READ`
I2C read data

`enum i2c_trans_mode_t`
Values:

`I2C_DATA_MODE_MSB_FIRST` = 0
I2C data msb first

`I2C_DATA_MODE_LSB_FIRST` = 1
I2C data lsb first

`I2C_DATA_MODE_MAX`

`enum i2c_opmode_t`
Values:

`I2C_CMD_RESTART` = 0
I2C restart command

`I2C_CMD_WRITE`
I2C write command

`I2C_CMD_READ`
I2C read command

`I2C_CMD_STOP`
I2C stop command

`I2C_CMD_END`
I2C end command

`enum i2c_port_t`
Values:

`I2C_NUM_0` = 0
I2C port 0

`I2C_NUM_1`
I2C port 1

`I2C_NUM_MAX`

enum i2c_addr_mode_t

Values:

I2C_ADDR_BIT_7 = 0

I2C 7bit address for slave mode

I2C_ADDR_BIT_10

I2C 10bit address for slave mode

I2C_ADDR_BIT_MAX

enum i2c_ack_type_t

Values:

I2C_MASTER_ACK = 0x0

I2C ack for each byte read

I2C_MASTER_NACK = 0x1

I2C nack for each byte read

I2C_MASTER_LAST_NACK = 0x2

I2C nack for the last byte

I2C_MASTER_ACK_MAX

3.3.6 I2S

Overview

ESP32 contains two I2S peripherals. These peripherals can be configured to input and output sample data via the I2S driver.

The I2S peripheral supports DMA meaning it can stream sample data without requiring each sample to be read or written by the CPU.

I2S output can also be routed directly to the Digital/Analog Converter output channels (GPIO 25 & GPIO 26) to produce analog output directly, rather than via an external I2S codec.

注解: For high accuracy clock applications, APLL clock source can be used with *.use_apll = true* and ESP32 will automatically calculate APLL parameter.

注解: If *use_apll = true* and *fixed_mclk > 0*, then the Master clock output for I2S is fixed and equal to the fixed_mclk value. The audio clock rate (LRCK) is always the MCLK divisor and 0 < MCLK/LRCK/channels/bits_per_sample < 64

Application Example

A full I2S example is available in esp-idf: peripherals/i2s.

Short example of I2S configuration:

```
#include "driver/i2s.h"
#include "freertos/queue.h"

static const int i2s_num = 0; // i2s port number

static const i2s_config_t i2s_config = {
     .mode = I2S_MODE_MASTER | I2S_MODE_TX,
     .sample_rate = 44100,
     .bits_per_sample = 16,
     .channel_format = I2S_CHANNEL_FMT_RIGHT_LEFT,
     .communication_format = I2S_COMM_FORMAT_I2S | I2S_COMM_FORMAT_I2S_MSB,
     .intr_alloc_flags = 0, // default interrupt priority
     .dma_buf_count = 8,
     .dma_buf_len = 64,
     .use_apll = false
};

static const i2s_pin_config_t pin_config = {
    .bck_io_num = 26,
    .ws_io_num = 25,
    .data_out_num = 22,
    .data_in_num = I2S_PIN_NO_CHANGE
};

...

    i2s_driver_install(i2s_num, &i2s_config, 0, NULL);   //install and start i2s driver

    i2s_set_pin(i2s_num, &pin_config);

    i2s_set_sample_rates(i2s_num, 22050); //set sample rates

    i2s_driver_uninstall(i2s_num); //stop & destroy i2s driver
```

Short example configuring I2S to use internal DAC for analog output:

```
#include "driver/i2s.h"
#include "freertos/queue.h"

static const int i2s_num = 0; // i2s port number

static const i2s_config_t i2s_config = {
     .mode = I2S_MODE_MASTER | I2S_MODE_TX | I2S_MODE_DAC_BUILT_IN,
     .sample_rate = 44100,
     .bits_per_sample = 16, /* the DAC module will only take the 8bits from MSB */
     .channel_format = I2S_CHANNEL_FMT_RIGHT_LEFT,
     .communication_format = I2S_COMM_FORMAT_I2S_MSB,
     .intr_alloc_flags = 0, // default interrupt priority
     .dma_buf_count = 8,
     .dma_buf_len = 64,
     .use_apll = false
};

...

    i2s_driver_install(i2s_num, &i2s_config, 0, NULL);   //install and start i2s driver

    i2s_set_pin(i2s_num, NULL); //for internal DAC, this will enable both of the␣
↪internal channels

    //You can call i2s_set_dac_mode to set built-in DAC output mode.
    //i2s_set_dac_mode(I2S_DAC_CHANNEL_BOTH_EN);

    i2s_set_sample_rates(i2s_num, 22050); //set sample rates

    i2s_driver_uninstall(i2s_num); //stop & destroy i2s driver
```

API Reference

Header File

- driver/include/driver/i2s.h

Functions

esp_err_t **i2s_set_pin**(*i2s_port_t i2s_num*, **const** *i2s_pin_config_t* **pin*)

Set I2S pin number.

Inside the pin configuration structure, set I2S_PIN_NO_CHANGE for any pin where the current configuration should not be changed.

Note The I2S peripheral output signals can be connected to multiple GPIO pads. However, the I2S peripheral input signal can only be connected to one GPIO pad.

Parameters

- `i2s_num`: I2S_NUM_0 or I2S_NUM_1
- `pin`: I2S Pin structure, or NULL to set 2-channel 8-bit internal DAC pin configuration (GPIO25 & GPIO26)

Note if *pin is set as NULL, this function will initialize both of the built-in DAC channels by default. if you don't want this to happen and you want to initialize only one of the DAC channels, you can call i2s_set_dac_mode instead.

Return

- ESP_OK Success
- ESP_ERR_INVALID_ARG Parameter error
- ESP_FAIL IO error

esp_err_t **i2s_set_pdm_rx_down_sample**(*i2s_port_t i2s_num*, *i2s_pdm_dsr_t dsr*)

Set PDM mode down-sample rate In PDM RX mode, there would be 2 rounds of downsample process in hardware. In the first downsample process, the sampling number can be 16 or 8. In the second downsample process, the sampling number is fixed as 8. So the clock frequency in PDM RX mode would be (fpcm * 64) or (fpcm * 128) accordingly.

Note After calling this function, it would call i2s_set_clk inside to update the clock frequency. Please call this function after I2S driver has been initialized.

Return

- ESP_OK Success
- ESP_ERR_INVALID_ARG Parameter error
- ESP_ERR_NO_MEM Out of memory

Parameters

- `i2s_num`: I2S_NUM_0, I2S_NUM_1
- `dsr`: i2s RX down sample rate for PDM mode.

esp_err_t **i2s_set_dac_mode**(*i2s_dac_mode_t dac_mode*)

Set I2S dac mode, I2S built-in DAC is disabled by default.

Note Built-in DAC functions are only supported on I2S0 for current ESP32 chip. If either of the built-in DAC channel are enabled, the other one can not be used as RTC DAC function at the same time.

Return

- ESP_OK Success
- ESP_ERR_INVALID_ARG Parameter error

Parameters

- `dac_mode`: DAC mode configurations - see i2s_dac_mode_t

esp_err_t **i2s_driver_install**(*i2s_port_t i2s_num*, **const** *i2s_config_t* **i2s_config*, int *queue_size*, void **i2s_queue*)

Install and start I2S driver.

This function must be called before any I2S driver read/write operations.

Parameters

- `i2s_num`: I2S_NUM_0, I2S_NUM_1
- `i2s_config`: I2S configurations - see *i2s_config_t* struct
- `queue_size`: I2S event queue size/depth.
- `i2s_queue`: I2S event queue handle, if set NULL, driver will not use an event queue.

Return

- ESP_OK Success
- ESP_ERR_INVALID_ARG Parameter error
- ESP_ERR_NO_MEM Out of memory

esp_err_t **i2s_driver_uninstall**(*i2s_port_t i2s_num*)

Uninstall I2S driver.

Return

- ESP_OK Success
- ESP_ERR_INVALID_ARG Parameter error

Parameters

- `i2s_num`: I2S_NUM_0, I2S_NUM_1

int **i2s_write_bytes**(*i2s_port_t i2s_num*, **const** void **src*, size_t *size*, TickType_t *ticks_to_wait*)

Write data to I2S DMA transmit buffer.

This function is deprecated. Use 'i2s_write' instead. This definition will be removed in a future release.

Return

- The amount of bytes written, if timeout, the result will be less than the size passed in.
- ESP_FAIL Parameter error

esp_err_t **i2s_write**(*i2s_port_t i2s_num*, **const** void **src*, size_t *size*, size_t **bytes_written*, TickType_t *ticks_to_wait*)

Write data to I2S DMA transmit buffer.

Return

- ESP_OK Success
- ESP_ERR_INVALID_ARG Parameter error

Parameters

- `i2s_num`: I2S_NUM_0, I2S_NUM_1
- `src`: Source address to write from
- `size`: Size of data in bytes
- `bytes_written`: Number of bytes written, if timeout, the result will be less than the size passed in.
- `ticks_to_wait`: TX buffer wait timeout in RTOS ticks. If this many ticks pass without space becoming available in the DMA transmit buffer, then the function will return (note that if the data is written to the DMA buffer in pieces, the overall operation may still take longer than this timeout.) Pass portMAX_DELAY for no timeout.

esp_err_t **i2s_write_expand**(*i2s_port_t i2s_num*, **const** void **src*, size_t *size*, size_t *src_bits*, size_t *aim_bits*, size_t **bytes_written*, TickType_t *ticks_to_wait*)

Write data to I2S DMA transmit buffer while expanding the number of bits per sample. For example, expanding 16-bit PCM to 32-bit PCM.

Format of the data in source buffer is determined by the I2S configuration (see *i2s_config_t*).

Parameters

- `i2s_num`: I2S_NUM_0, I2S_NUM_1
- `src`: Source address to write from
- `size`: Size of data in bytes
- `src_bits`: Source audio bit

- `aim_bits`: Bit wanted, no more than 32, and must be greater than src_bits
- `bytes_written`: Number of bytes written, if timeout, the result will be less than the size passed in.
- `ticks_to_wait`: TX buffer wait timeout in RTOS ticks. If this many ticks pass without space becoming available in the DMA transmit buffer, then the function will return (note that if the data is written to the DMA buffer in pieces, the overall operation may still take longer than this timeout.) Pass portMAX_DELAY for no timeout.

Return

- ESP_OK Success
- ESP_ERR_INVALID_ARG Parameter error

int **i2s_read_bytes**(*i2s_port_t i2s_num*, void **dest*, size_t *size*, TickType_t *ticks_to_wait*)

Read data from I2S DMA receive buffer.

This function is deprecated. Use 'i2s_read' instead. This definition will be removed in a future release.

Return

- The amount of bytes read, if timeout, bytes read will be less than the size passed in
- ESP_FAIL Parameter error

esp_err_t **i2s_read**(*i2s_port_t i2s_num*, void **dest*, size_t *size*, size_t **bytes_read*, TickType_t *ticks_to_wait*)

Read data from I2S DMA receive buffer.

Note If the built-in ADC mode is enabled, we should call i2s_adc_start and i2s_adc_stop around the whole reading process, to prevent the data getting corrupted.

Return

- ESP_OK Success
- ESP_ERR_INVALID_ARG Parameter error

Parameters

- `i2s_num`: I2S_NUM_0, I2S_NUM_1
- `dest`: Destination address to read into
- `size`: Size of data in bytes
- `bytes_read`: Number of bytes read, if timeout, bytes read will be less than the size passed in.

- `ticks_to_wait`: RX buffer wait timeout in RTOS ticks. If this many ticks pass without bytes becoming available in the DMA receive buffer, then the function will return (note that if data is read from the DMA buffer in pieces, the overall operation may still take longer than this timeout.) Pass portMAX_DELAY for no timeout.

int **i2s_push_sample**(*i2s_port_t i2s_num*, const void *sample, TickType_t *ticks_to_wait*)

Write a single sample to the I2S DMA TX buffer.

This function is deprecated. Use 'i2s_write' instead. This definition will be removed in a future release.

Return

- Number of bytes successfully pushed to DMA buffer, will be either zero or the size of configured sample buffer (in bytes).
- ESP_FAIL Parameter error

Parameters

- `i2s_num`: I2S_NUM_0, I2S_NUM_1
- `sample`: Buffer to read data. Size of buffer (in bytes) = bits_per_sample / 8.
- `ticks_to_wait`: Timeout in RTOS ticks. If a sample is not available in the DMA buffer within this period, no data is read and function returns zero.

int **i2s_pop_sample**(*i2s_port_t i2s_num*, void *sample, TickType_t *ticks_to_wait*)

Read a single sample from the I2S DMA RX buffer.

This function is deprecated. Use 'i2s_read' instead. This definition will be removed in a future release.

Return

- Number of bytes successfully read from DMA buffer, will be either zero or the size of configured sample buffer (in bytes).
- ESP_FAIL Parameter error

Parameters

- `i2s_num`: I2S_NUM_0, I2S_NUM_1
- `sample`: Buffer to write data. Size of buffer (in bytes) = bits_per_sample / 8.
- `ticks_to_wait`: Timeout in RTOS ticks. If a sample is not available in the DMA buffer within this period, no data is read and function returns zero.

esp_err_t **i2s_set_sample_rates**(*i2s_port_t i2s_num*, uint32_t *rate*)

Set sample rate used for I2S RX and TX.

The bit clock rate is determined by the sample rate and *i2s_config_t* configuration parameters (number of channels, bits_per_sample).

```
bit_clock = rate * (number of channels) * bits_per_sample
```

Return

- ESP_OK Success
- ESP_ERR_INVALID_ARG Parameter error
- ESP_ERR_NO_MEM Out of memory

Parameters

- `i2s_num`: I2S_NUM_0, I2S_NUM_1
- `rate`: I2S sample rate (ex: 8000, 44100···)

esp_err_t **i2s_stop**(*i2s_port_t i2s_num*)

Stop I2S driver.

Disables I2S TX/RX, until i2s_start() is called.

Return

- ESP_OK Success
- ESP_ERR_INVALID_ARG Parameter error

Parameters

- `i2s_num`: I2S_NUM_0, I2S_NUM_1

esp_err_t **i2s_start**(*i2s_port_t i2s_num*)

Start I2S driver.

It is not necessary to call this function after i2s_driver_install() (it is started automatically), however it is necessary to call it after i2s_stop().

Return

- ESP_OK Success
- ESP_ERR_INVALID_ARG Parameter error

Parameters

- `i2s_num`: I2S_NUM_0, I2S_NUM_1

esp_err_t **i2s_zero_dma_buffer**(*i2s_port_t i2s_num*)

Zero the contents of the TX DMA buffer.

Pushes zero-byte samples into the TX DMA buffer, until it is full.

Return

- ESP_OK Success
- ESP_ERR_INVALID_ARG Parameter error

Parameters

- `i2s_num`: I2S_NUM_0, I2S_NUM_1

esp_err_t **i2s_set_clk**(*i2s_port_t i2s_num*, uint32_t *rate*, *i2s_bits_per_sample_t bits*, *i2s_channel_t ch*)

Set clock & bit width used for I2S RX and TX.

Similar to i2s_set_sample_rates(), but also sets bit width.

Return

- ESP_OK Success
- ESP_ERR_INVALID_ARG Parameter error
- ESP_ERR_NO_MEM Out of memory

Parameters

- `i2s_num`: I2S_NUM_0, I2S_NUM_1
- `rate`: I2S sample rate (ex: 8000, 44100···)
- `bits`: I2S bit width (I2S_BITS_PER_SAMPLE_16BIT, I2S_BITS_PER_SAMPLE_24BIT, I2S_BITS_PER_SAMPLE_32BIT)
- `ch`: I2S channel, (I2S_CHANNEL_MONO, I2S_CHANNEL_STEREO)

float **i2s_get_clk**(*i2s_port_t i2s_num*)

get clock set on particular port number.

Return

- actual clock set by i2s driver

Parameters

- `i2s_num`: I2S_NUM_0, I2S_NUM_1

esp_err_t **i2s_set_adc_mode**(*adc_unit_t adc_unit*, *adc1_channel_t adc_channel*)

Set built-in ADC mode for I2S DMA, this function will initialize ADC pad, and set ADC parameters.

Return

- ESP_OK Success
- ESP_ERR_INVALID_ARG Parameter error

Parameters

- `adc_unit`: SAR ADC unit index
- `adc_channel`: ADC channel index

esp_err_t **i2s_adc_enable**(*i2s_port_t i2s_num*)

Start to use I2S built-in ADC mode.

Note This function would acquire the lock of ADC to prevent the data getting corrupted during the I2S peripheral is being used to do fully continuous ADC sampling.

Return

- ESP_OK Success
- ESP_ERR_INVALID_ARG Parameter error
- ESP_ERR_INVALID_STATE Driver state error

Parameters

- `i2s_num`: i2s port index

esp_err_t **i2s_adc_disable**(*i2s_port_t i2s_num*)

Stop to use I2S built-in ADC mode.

Note This function would release the lock of ADC so that other tasks can use ADC.

Return

- ESP_OK Success
- ESP_ERR_INVALID_ARG Parameter error
- ESP_ERR_INVALID_STATE Driver state error

Parameters

- `i2s_num`: i2s port index

Structures

struct i2s_config_t

I2S configuration parameters for i2s_param_config function.

Public Members

i2s_mode_t **mode**

I2S work mode

int **sample_rate**
I2S sample rate

i2s_bits_per_sample_t **bits_per_sample**
I2S bits per sample

i2s_channel_fmt_t **channel_format**
I2S channel format

i2s_comm_format_t **communication_format**
I2S communication format

int **intr_alloc_flags**
Flags used to allocate the interrupt. One or multiple (ORred) ESP_INTR_FLAG_* values. See esp_intr_alloc.h for more info

int **dma_buf_count**
I2S DMA Buffer Count

int **dma_buf_len**
I2S DMA Buffer Length

bool **use_apll**
I2S using APLL as main I2S clock, enable it to get accurate clock

bool **tx_desc_auto_clear**
I2S auto clear tx descriptor if there is underflow condition (helps in avoiding noise in case of data unavailability)

int **fixed_mclk**
I2S using fixed MCLK output. If use_apll = true and fixed_mclk > 0, then the clock output for i2s is fixed and equal to the fixed_mclk value.

struct i2s_event_t
Event structure used in I2S event queue.

Public Members

i2s_event_type_t **type**
I2S event type

size_t **size**
I2S data size for I2S_DATA event

struct i2s_pin_config_t
I2S pin number for i2s_set_pin.

Public Members

int **bck_io_num**
: BCK in out pin

int **ws_io_num**
: WS in out pin

int **data_out_num**
: DATA out pin

int **data_in_num**
: DATA in pin

Macros

I2S_PIN_NO_CHANGE
: Use in *i2s_pin_config_t* for pins which should not be changed

Type Definitions

typedef *intr_handle_t* **i2s_isr_handle_t**

Enumerations

enum i2s_bits_per_sample_t
: I2S bit width per sample.

Values:

I2S_BITS_PER_SAMPLE_8BIT = 8
: I2S bits per sample: 8-bits

I2S_BITS_PER_SAMPLE_16BIT = 16
: I2S bits per sample: 16-bits

I2S_BITS_PER_SAMPLE_24BIT = 24
: I2S bits per sample: 24-bits

I2S_BITS_PER_SAMPLE_32BIT = 32
: I2S bits per sample: 32-bits

enum i2s_channel_t
: I2S channel.

Values:

`I2S_CHANNEL_MONO` = 1
I2S 1 channel (mono)

`I2S_CHANNEL_STEREO` = 2
I2S 2 channel (stereo)

`enum i2s_comm_format_t`
I2S communication standard format.

Values:

`I2S_COMM_FORMAT_I2S` = 0x01
I2S communication format I2S

`I2S_COMM_FORMAT_I2S_MSB` = 0x02
I2S format MSB

`I2S_COMM_FORMAT_I2S_LSB` = 0x04
I2S format LSB

`I2S_COMM_FORMAT_PCM` = 0x08
I2S communication format PCM

`I2S_COMM_FORMAT_PCM_SHORT` = 0x10
PCM Short

`I2S_COMM_FORMAT_PCM_LONG` = 0x20
PCM Long

`enum i2s_channel_fmt_t`
I2S channel format type.

Values:

`I2S_CHANNEL_FMT_RIGHT_LEFT` = 0x00

`I2S_CHANNEL_FMT_ALL_RIGHT`

`I2S_CHANNEL_FMT_ALL_LEFT`

`I2S_CHANNEL_FMT_ONLY_RIGHT`

`I2S_CHANNEL_FMT_ONLY_LEFT`

`enum pdm_sample_rate_ratio_t`
PDM sample rate ratio, measured in Hz.

Values:

`PDM_SAMPLE_RATE_RATIO_64`

`PDM_SAMPLE_RATE_RATIO_128`

enum pdm_pcm_conv_t

PDM PCM convter enable/disable.

Values:

PDM_PCM_CONV_ENABLE

PDM_PCM_CONV_DISABLE

enum i2s_port_t

I2S Peripheral, 0 & 1.

Values:

I2S_NUM_0 = 0x0

I2S 0

I2S_NUM_1 = 0x1

I2S 1

I2S_NUM_MAX

enum i2s_mode_t

I2S Mode, defaut is I2S_MODE_MASTER | I2S_MODE_TX.

Note PDM and built-in DAC functions are only supported on I2S0 for current ESP32 chip.

Values:

I2S_MODE_MASTER = 1

I2S_MODE_SLAVE = 2

I2S_MODE_TX = 4

I2S_MODE_RX = 8

I2S_MODE_DAC_BUILT_IN = 16

Output I2S data to built-in DAC, no matter the data format is 16bit or 32 bit, the DAC module will only take the 8bits from MSB

I2S_MODE_ADC_BUILT_IN = 32

Input I2S data from built-in ADC, each data can be 12-bit width at most

I2S_MODE_PDM = 64

enum i2s_event_type_t

I2S event types.

Values:

I2S_EVENT_DMA_ERROR

`I2S_EVENT_TX_DONE`
I2S DMA finish sent 1 buffer

`I2S_EVENT_RX_DONE`
I2S DMA finish received 1 buffer

`I2S_EVENT_MAX`
I2S event max index

`enum i2s_dac_mode_t`
I2S DAC mode for i2s_set_dac_mode.

Note PDM and built-in DAC functions are only supported on I2S0 for current ESP32 chip.

Values:

`I2S_DAC_CHANNEL_DISABLE` = 0
Disable I2S built-in DAC signals

`I2S_DAC_CHANNEL_RIGHT_EN` = 1
Enable I2S built-in DAC right channel, maps to DAC channel 1 on GPIO25

`I2S_DAC_CHANNEL_LEFT_EN` = 2
Enable I2S built-in DAC left channel, maps to DAC channel 2 on GPIO26

`I2S_DAC_CHANNEL_BOTH_EN` = 0x3
Enable both of the I2S built-in DAC channels.

`I2S_DAC_CHANNEL_MAX` = 0x4
I2S built-in DAC mode max index

`enum i2s_pdm_dsr_t`
I2S PDM RX downsample mode.

Values:

`I2S_PDM_DSR_8S` = 0
downsampling number is 8 for PDM RX mode

`I2S_PDM_DSR_16S`
downsampling number is 16 for PDM RX mode

`I2S_PDM_DSR_MAX`

3.3.7 LED Control

Introduction

The LED control (LEDC) module is primarily designed to control the intensity of LEDs, although it can be used to generate PWM signals for other purposes as well. It has 16 channels which can generate independent

waveforms, that can be used to drive e.g. RGB LED devices.

Half of all LEDC's channels provide high speed mode of operation. This mode offers implemented in hardware, automatic and glitch free change of PWM duty cycle. The other half of channels operate in a low speed mode, where the moment of change depends on the application software. Each group of channels is also able to use different clock sources but this feature is not implemented in the API.

The PWM controller also has the ability to automatically increase or decrease the duty cycle gradually, allowing for fades without any processor interference.

Functionality Overview

Getting LEDC to work on specific channel in either *high or low speed mode* is done in three steps:

1. *Configure Timer* to determine PWM signal's frequency and the a number (resolution of duty range).
2. *Configure Channel* by associating it with the timer and GPIO to output the PWM signal.
3. *Change PWM Signal* that drives the output to change LED's intensity. This may be done under full control by software or with help of hardware fading functions.

In an optional step it is also possible to set up an interrupt on the fade end.

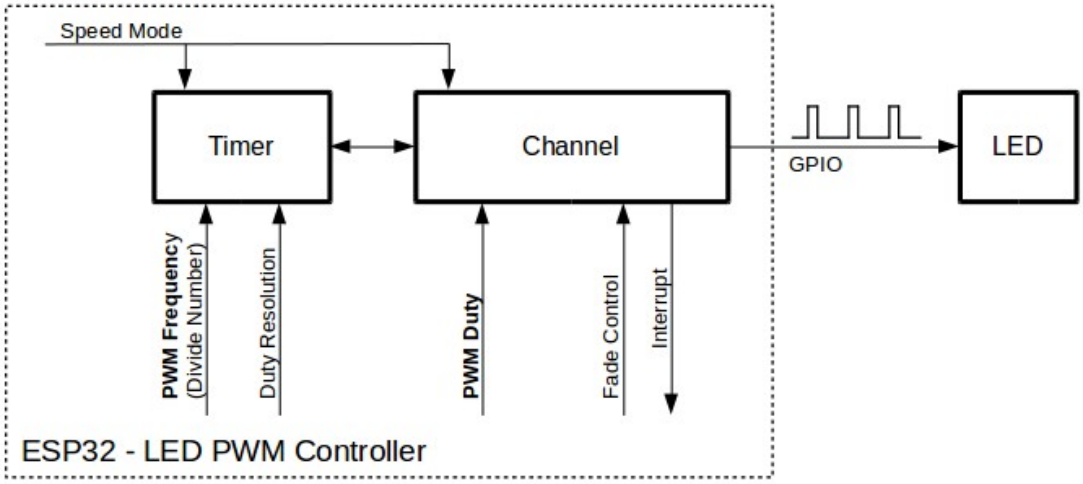

图 14: Key Settings of LED PWM Controller's API

Configure Timer

Setting of the timer is done by calling function `ledc_timer_config()`. This function should be provided with a data structure `ledc_timer_config_t` that contains the following configuration settings:

- The timer number *ledc_timer_t* and a speed mode *ledc_mode_t*.
- The PWM signal' s frequency and resolution of PWM' s duty value changes.

The frequency and the duty resolution are interdependent. The higher the PWM frequency, the lower duty resolution is available and vice versa. This relationship may became important, if you are planning to use this API for purposes other that changing intensity of LEDs. Check section *Supported Range of Frequency and Duty Resolution* for more details.

Configure Channel

Having set up the timer, the next step is to configure selected channel (one out of *ledc_channel_t*). This is done by calling function *ledc_channel_config()*.

In similar way, like with the timer configuration, the channel setup function should be provided with specific structure *ledc_channel_config_t*, that contains channel' s configuration parameters.

At this point channel should became operational and start generating PWM signal of frequency determined by the timer settings and the duty on selected GPIO, as configured in *ledc_channel_config_t*. The channel operation / the signal generation may be suspended at any time by calling function *ledc_stop()*.

Change PWM Signal

Once the channel is operational and generating the PWM signal of constant duty and frequency, there are couple of ways to change this signal. When driving LEDs we are changing primarily the duty to vary the light intensity. See the two section below how to change the duty by software or with hardware fading. If required, we can change signal' s frequency as well and this is covered in section *Change PWM Frequency*.

Change PWM Duty by Software

Setting of the duty is done by first calling dedicated function *ledc_set_duty()* and then calling *ledc_update_duty()* to make the change effective. To check the value currently set, there is a corresponding `_get_` function *ledc_get_duty()*.

Another way to set the duty, and some other channel parameters as well, is by calling *ledc_channel_config()* discussed in the previous section.

The range of the duty value entered into functions depends on selected `duty_resolution` and should be from 0 to (2 ** duty_resolution) - 1. For example, if selected duty resolution is 10, then the duty range is from 0 to 1023. This provides the resolution of ~0.1%.

Change PWM Duty with Hardware Fading

The LEDC hardware provides the means to gradually fade from one duty value to another. To use this functionality first enable fading with *ledc_fade_func_install()*. Then configure it by calling one of available fading functions:

- *ledc_set_fade_with_time()*
- *ledc_set_fade_with_step()*
- *ledc_set_fade()*

Finally start fading with *ledc_fade_start()*.

If not required anymore, fading and associated interrupt may be disabled with *ledc_fade_func_uninstall()*.

Change PWM Frequency

The LEDC API provides several means to change the PWM frequency "on the fly".

- One of options is to call *ledc_set_freq()*. There is a corresponding function *ledc_get_freq()* to check what frequency is currently set.
- Another option to change the frequency, and the duty resolution as well, is by calling *ledc_bind_channel_timer()* to bind other timer to the channel.
- Finally the channel's timer may be changed by calling *ledc_channel_config()*.

More Control Over PWM

There are couple of lower level timer specific functions, that may be used to provide additional means to change the PWM settings:

- *ledc_timer_set()*
- *ledc_timer_rst()*
- *ledc_timer_pause()*
- *ledc_timer_resume()*

The first two functions are called "behind the scenes" by *ledc_channel_config()* to provide "clean" start up of a timer after is it configured.

Use Interrupts

When configuring a LEDC channel, one of parameters selected within *ledc_channel_config_t* is *ledc_intr_type_t* and allows to enable an interrupt on fade completion.

Registration of a handler to service this interrupt is done by calling *ledc_isr_register()*.

LEDC High and Low Speed Mode

Out of the total 8 timers and 16 channels available in the LED PWM Controller, half of them are dedicated to operate in the high speed mode and the other half in the low speed mode. Selection of the low or high speed "capable" timer or the channel is done with parameter *ledc_mode_t* that is present in applicable function calls.

The advantage of the high speed mode is h/w supported, glitch-free changeover of the timer settings. This means that if the timer settings are modified, the changes will be applied automatically after the next overflow interrupt of the timer. In contrast, when updating the low-speed timer, the change of settings should be specifically triggered by software. The LEDC API is doing it "behind the scenes" , e.g. when *ledc_timer_config()* or *ledc_timer_set()* is called.

For additional details regarding speed modes please refer to ESP32 Technical Reference Manual (PDF). Note that support for `SLOW_CLOCK` mentioned in this manual is not implemented in the LEDC API.

Supported Range of Frequency and Duty Resolution

The LED PWM Controller is designed primarily to drive LEDs and provides wide resolution of PWM duty settings. For instance for the PWM frequency at 5 kHz, the maximum duty resolution is 13 bits. It means that the duty may be set anywhere from 0 to 100% with resolution of ~0.012% (13 ** 2 = 8192 discrete levels of the LED intensity).

The LEDC may be used for providing signals at much higher frequencies to clock other devices, e.g. a digital camera module. In such a case the maximum available frequency is 40 MHz with duty resolution of 1 bit. This means that duty is fixed at 50% and cannot be adjusted.

The API is designed to report an error when trying to set a frequency and a duty resolution that is out of the range of LEDC' s hardware. For example, an attempt to set the frequency at 20 MHz and the duty resolution of 3 bits will result in the following error reported on a serial monitor:

```
E (196) ledc: requested frequency and duty resolution can not be achieved, try reducing␣
↪freq_hz or duty_resolution. div_param=128
```

In such a case either the duty resolution or the frequency should be reduced. For example setting the duty resolution at 2 will resolve this issue and provide possibility to set the duty with 25% steps, i.e. at 25%, 50% or 75%.

The LEDC API will also capture and report an attempt to configure frequency / duty resolution combination that is below the supported minimum, e.g.:

```
E (196) ledc: requested frequency and duty resolution can not be achieved, try␣
↪increasing freq_hz or duty_resolution. div_param=128000000
```

Setting of the duty resolution is normally done using *ledc_timer_bit_t*. This enumeration covers the range from 10 to 15 bits. If a smaller duty resolution is required (below 10 down to 1), enter the equivalent numeric values directly.

Application Example

The LEDC change duty cycle and fading control example: peripherals/ledc.

API Reference

Header File

- driver/include/driver/ledc.h

Functions

esp_err_t **ledc_channel_config**(**const** *ledc_channel_config_t* **ledc_conf*)

LEDC channel configuration Configure LEDC channel with the given channel/output gpio_num/interrupt/source timer/frequency(Hz)/LEDC duty resolution.

Return

- ESP_OK Success
- ESP_ERR_INVALID_ARG Parameter error

Parameters

- `ledc_conf`: Pointer of LEDC channel configure struct

esp_err_t **ledc_timer_config**(**const** *ledc_timer_config_t* **timer_conf*)

LEDC timer configuration Configure LEDC timer with the given source timer/frequency(Hz)/duty_resolution.

Return

- ESP_OK Success
- ESP_ERR_INVALID_ARG Parameter error
- ESP_FAIL Can not find a proper pre-divider number base on the given frequency and the current duty_resolution.

Parameters

- `timer_conf`: Pointer of LEDC timer configure struct

esp_err_t **ledc_update_duty**(*ledc_mode_t speed_mode*, *ledc_channel_t channel*)

LEDC update channel parameters.

Note Call this function to activate the LEDC updated parameters. After ledc_set_duty, we need to call this function to update the settings.

Note ledc_set_duty, ledc_set_duty_with_hpoint and ledc_update_duty are not thread-safe, do not call these functions to control one LEDC channel in different tasks at the same time. A thread-safe version of API is ledc_set_duty_and_update

Return

- ESP_OK Success
- ESP_ERR_INVALID_ARG Parameter error

Parameters

- `speed_mode`: Select the LEDC speed_mode, high-speed mode and low-speed mode,
- `channel`: LEDC channel (0-7), select from ledc_channel_t

esp_err_t **ledc_set_pin**(int *gpio_num*, *ledc_mode_t speed_mode*, *ledc_channel_t ledc_channel*)

Set LEDC output gpio.

Return

- ESP_OK Success
- ESP_ERR_INVALID_ARG Parameter error

Parameters

- `gpio_num`: The LEDC output gpio
- `speed_mode`: Select the LEDC speed_mode, high-speed mode and low-speed mode
- `ledc_channel`: LEDC channel (0-7), select from ledc_channel_t

esp_err_t **ledc_stop**(*ledc_mode_t speed_mode*, *ledc_channel_t channel*, uint32_t *idle_level*)

LEDC stop. Disable LEDC output, and set idle level.

Return

- ESP_OK Success
- ESP_ERR_INVALID_ARG Parameter error

Parameters

- `speed_mode`: Select the LEDC speed_mode, high-speed mode and low-speed mode
- `channel`: LEDC channel (0-7), select from ledc_channel_t

- `idle_level`: Set output idle level after LEDC stops.

esp_err_t **ledc_set_freq**(*ledc_mode_t speed_mode*, *ledc_timer_t timer_num*, uint32_t *freq_hz*)

LEDC set channel frequency (Hz)

Return

- ESP_OK Success
- ESP_ERR_INVALID_ARG Parameter error
- ESP_FAIL Can not find a proper pre-divider number base on the given frequency and the current duty_resolution.

Parameters

- `speed_mode`: Select the LEDC speed_mode, high-speed mode and low-speed mode
- `timer_num`: LEDC timer index (0-3), select from ledc_timer_t
- `freq_hz`: Set the LEDC frequency

uint32_t **ledc_get_freq**(*ledc_mode_t speed_mode*, *ledc_timer_t timer_num*)

LEDC get channel frequency (Hz)

Return

- 0 error
- Others Current LEDC frequency

Parameters

- `speed_mode`: Select the LEDC speed_mode, high-speed mode and low-speed mode
- `timer_num`: LEDC timer index (0-3), select from ledc_timer_t

esp_err_t **ledc_set_duty_with_hpoint**(*ledc_mode_t speed_mode*, *ledc_channel_t channel*, uint32_t *duty*, uint32_t *hpoint*)

LEDC set duty and hpoint value Only after calling ledc_update_duty will the duty update.

Note ledc_set_duty, ledc_set_duty_with_hpoint and ledc_update_duty are not thread-safe, do not call these functions to control one LEDC channel in different tasks at the same time. A thread-safe version of API is ledc_set_duty_and_update

Note If a fade operation is running in progress on that channel, the driver would not allow it to be stopped. Other duty operations will have to wait until the fade operation has finished.

Return

- ESP_OK Success
- ESP_ERR_INVALID_ARG Parameter error

Parameters

- `speed_mode`: Select the LEDC speed_mode, high-speed mode and low-speed mode
- `channel`: LEDC channel (0-7), select from ledc_channel_t
- `duty`: Set the LEDC duty, the range of duty setting is [0, (2**duty_resolution)]
- `hpoint`: Set the LEDC hpoint value(max: 0xfffff)

int **ledc_get_hpoint**(*ledc_mode_t speed_mode*, *ledc_channel_t channel*)

LEDC get hpoint value, the counter value when the output is set high level.

Return

- LEDC_ERR_VAL if parameter error
- Others Current hpoint value of LEDC channel

Parameters

- `speed_mode`: Select the LEDC speed_mode, high-speed mode and low-speed mode
- `channel`: LEDC channel (0-7), select from ledc_channel_t

esp_err_t **ledc_set_duty**(*ledc_mode_t speed_mode*, *ledc_channel_t channel*, uint32_t *duty*)

LEDC set duty This function do not change the hpoint value of this channel. if needed, please call ledc_set_duty_with_hpoint. only after calling ledc_update_duty will the duty update.

Note ledc_set_duty, ledc_set_duty_with_hpoint and ledc_update_duty are not thread-safe, do not call these functions to control one LEDC channel in different tasks at the same time. A thread-safe version of API is ledc_set_duty_and_update.

Note If a fade operation is running in progress on that channel, the driver would not allow it to be stopped. Other duty operations will have to wait until the fade operation has finished.

Return

- ESP_OK Success
- ESP_ERR_INVALID_ARG Parameter error

Parameters

- `speed_mode`: Select the LEDC speed_mode, high-speed mode and low-speed mode
- `channel`: LEDC channel (0-7), select from ledc_channel_t
- `duty`: Set the LEDC duty, the range of duty setting is [0, (2**duty_resolution)]

uint32_t **ledc_get_duty**(*ledc_mode_t speed_mode*, *ledc_channel_t channel*)

LEDC get duty.

Return

- LEDC_ERR_DUTY if parameter error
- Others Current LEDC duty

Parameters

- `speed_mode`: Select the LEDC speed_mode, high-speed mode and low-speed mode
- `channel`: LEDC channel (0-7), select from ledc_channel_t

esp_err_t **ledc_set_fade**(*ledc_mode_t speed_mode*, *ledc_channel_t channel*, uint32_t *duty*, *ledc_duty_direction_t fade_direction*, uint32_t *step_num*, uint32_t *duty_cyle_num*, uint32_t *duty_scale*)

LEDC set gradient Set LEDC gradient, After the function calls the ledc_update_duty function, the function can take effect.

Note If a fade operation is running in progress on that channel, the driver would not allow it to be stopped. Other duty operations will have to wait until the fade operation has finished.

Return

- ESP_OK Success
- ESP_ERR_INVALID_ARG Parameter error

Parameters

- `speed_mode`: Select the LEDC speed_mode, high-speed mode and low-speed mode
- `channel`: LEDC channel (0-7), select from ledc_channel_t
- `duty`: Set the start of the gradient duty, the range of duty setting is [0, (2**duty_resolution)]
- `fade_direction`: Set the direction of the gradient
- `step_num`: Set the number of the gradient
- `duty_cyle_num`: Set how many LEDC tick each time the gradient lasts
- `duty_scale`: Set gradient change amplitude

esp_err_t **ledc_isr_register**(void (***fn*))void *

, void **arg*, int *intr_alloc_flags*, *ledc_isr_handle_t* **handle*Register LEDC interrupt handler, the handler is an ISR. The handler will be attached to the same CPU core that this function is running on.

Return

- ESP_OK Success
- ESP_ERR_INVALID_ARG Function pointer error.

Parameters

- `fn`: Interrupt handler function.
- `arg`: User-supplied argument passed to the handler function.
- `intr_alloc_flags`: Flags used to allocate the interrupt. One or multiple (ORred) ESP_INTR_FLAG_* values. See esp_intr_alloc.h for more info.
- `arg`: Parameter for handler function
- `handle`: Pointer to return handle. If non-NULL, a handle for the interrupt will be returned here.

esp_err_t **ledc_timer_set**(*ledc_mode_t speed_mode*, *ledc_timer_t timer_sel*, uint32_t *clock_divider*, uint32_t *duty_resolution*, *ledc_clk_src_t clk_src*)

Configure LEDC settings.

Return

- (-1) Parameter error
- Other Current LEDC duty

Parameters

- `speed_mode`: Select the LEDC speed_mode, high-speed mode and low-speed mode
- `timer_sel`: Timer index (0-3), there are 4 timers in LEDC module
- `clock_divider`: Timer clock divide value, the timer clock is divided from the selected clock source
- `duty_resolution`: Resolution of duty setting in number of bits. The range of duty values is [0, (2**duty_resolution)]
- `clk_src`: Select LEDC source clock.

esp_err_t **ledc_timer_rst**(*ledc_mode_t speed_mode*, uint32_t *timer_sel*)

Reset LEDC timer.

Return

- ESP_ERR_INVALID_ARG Parameter error
- ESP_OK Success

Parameters

- `speed_mode`: Select the LEDC speed_mode, high-speed mode and low-speed mode
- `timer_sel`: LEDC timer index (0-3), select from ledc_timer_t

esp_err_t **ledc_timer_pause**(*ledc_mode_t speed_mode*, uint32_t *timer_sel*)

Pause LEDC timer counter.

Return

- ESP_ERR_INVALID_ARG Parameter error
- ESP_OK Success

Parameters

- `speed_mode`: Select the LEDC speed_mode, high-speed mode and low-speed mode
- `timer_sel`: LEDC timer index (0-3), select from ledc_timer_t

esp_err_t **ledc_timer_resume**(*ledc_mode_t speed_mode*, uint32_t *timer_sel*)

Resume LEDC timer.

Return

- ESP_ERR_INVALID_ARG Parameter error
- ESP_OK Success

Parameters

- `speed_mode`: Select the LEDC speed_mode, high-speed mode and low-speed mode
- `timer_sel`: LEDC timer index (0-3), select from ledc_timer_t

esp_err_t **ledc_bind_channel_timer**(*ledc_mode_t speed_mode*, uint32_t *channel*, uint32_t *timer_idx*)

Bind LEDC channel with the selected timer.

Return

- ESP_ERR_INVALID_ARG Parameter error
- ESP_OK Success

Parameters

- `speed_mode`: Select the LEDC speed_mode, high-speed mode and low-speed mode
- `channel`: LEDC channel index (0-7), select from ledc_channel_t
- `timer_idx`: LEDC timer index (0-3), select from ledc_timer_t

esp_err_t **ledc_set_fade_with_step**(*ledc_mode_t speed_mode*, *ledc_channel_t channel*, uint32_t *target_duty*, uint32_t *scale*, uint32_t *cycle_num*)

Set LEDC fade function.

Note Call ledc_fade_func_install() once before calling this function. Call ledc_fade_start() after this to start fading.

Note ledc_set_fade_with_step, ledc_set_fade_with_time and ledc_fade_start are not thread-safe, do not call these functions to control one LEDC channel in different tasks at the same time. A thread-safe version of API is ledc_set_fade_step_and_start

Note If a fade operation is running in progress on that channel, the driver would not allow it to be stopped. Other duty operations will have to wait until the fade operation has finished.

Return

- ESP_ERR_INVALID_ARG Parameter error
- ESP_OK Success
- ESP_ERR_INVALID_STATE Fade function not installed.
- ESP_FAIL Fade function init error

Parameters

- `speed_mode`: Select the LEDC speed_mode, high-speed mode and low-speed mode,
- `channel`: LEDC channel index (0-7), select from ledc_channel_t
- `target_duty`: Target duty of fading [0, (2**duty_resolution) - 1]
- `scale`: Controls the increase or decrease step scale.
- `cycle_num`: increase or decrease the duty every cycle_num cycles

esp_err_t **ledc_set_fade_with_time**(*ledc_mode_t speed_mode*, *ledc_channel_t channel*, uint32_t *target_duty*, int *max_fade_time_ms*)

Set LEDC fade function, with a limited time.

Note Call ledc_fade_func_install() once before calling this function. Call ledc_fade_start() after this to start fading.

Note ledc_set_fade_with_step, ledc_set_fade_with_time and ledc_fade_start are not thread-safe, do not call these functions to control one LEDC channel in different tasks at the same time. A thread-safe version of API is ledc_set_fade_step_and_start

Note If a fade operation is running in progress on that channel, the driver would not allow it to be stopped. Other duty operations will have to wait until the fade operation has finished.

Return

- ESP_ERR_INVALID_ARG Parameter error
- ESP_OK Success
- ESP_ERR_INVALID_STATE Fade function not installed.
- ESP_FAIL Fade function init error

Parameters

- `speed_mode`: Select the LEDC speed_mode, high-speed mode and low-speed mode,
- `channel`: LEDC channel index (0-7), select from ledc_channel_t
- `target_duty`: Target duty of fading.(0 - (2 ** duty_resolution - 1)))
- `max_fade_time_ms`: The maximum time of the fading (ms).

esp_err_t **ledc_fade_func_install**(int *intr_alloc_flags*)

Install LEDC fade function. This function will occupy interrupt of LEDC module.

Return

- ESP_OK Success
- ESP_ERR_INVALID_STATE Fade function already installed.

Parameters

- `intr_alloc_flags`: Flags used to allocate the interrupt. One or multiple (ORred) ESP_INTR_FLAG_* values. See esp_intr_alloc.h for more info.

void **ledc_fade_func_uninstall**()

Uninstall LEDC fade function.

esp_err_t **ledc_fade_start**(*ledc_mode_t speed_mode*, *ledc_channel_t channel*, *ledc_fade_mode_t fade_mode*)

Start LEDC fading.

Note Call ledc_fade_func_install() once before calling this function. Call this API right after ledc_set_fade_with_time or ledc_set_fade_with_step before to start fading.

Note If a fade operation is running in progress on that channel, the driver would not allow it to be stopped. Other duty operations will have to wait until the fade operation has finished.

Return

- ESP_OK Success
- ESP_ERR_INVALID_STATE Fade function not installed.
- ESP_ERR_INVALID_ARG Parameter error.

Parameters

- `speed_mode`: Select the LEDC speed_mode, high-speed mode and low-speed mode
- `channel`: LEDC channel number
- `fade_mode`: Whether to block until fading done.

esp_err_t **ledc_set_duty_and_update**(*ledc_mode_t speed_mode*, *ledc_channel_t channel*, uint32_t *duty*, uint32_t *hpoint*)

A thread-safe API to set duty for LEDC channel and return when duty updated.

Note If a fade operation is running in progress on that channel, the driver would not allow it to be stopped. Other duty operations will have to wait until the fade operation has finished.

Parameters

- `speed_mode`: Select the LEDC speed_mode, high-speed mode and low-speed mode
- `channel`: LEDC channel (0-7), select from ledc_channel_t
- `duty`: Set the LEDC duty, the range of duty setting is [0, (2**duty_resolution)]
- `hpoint`: Set the LEDC hpoint value(max: 0xfffff)

esp_err_t **ledc_set_fade_time_and_start**(*ledc_mode_t speed_mode*, *ledc_channel_t channel*, uint32_t *target_duty*, uint32_t *max_fade_time_ms*, *ledc_fade_mode_t fade_mode*)

A thread-safe API to set and start LEDC fade function, with a limited time.

Note Call ledc_fade_func_install() once, before calling this function.

Note If a fade operation is running in progress on that channel, the driver would not allow it to be stopped. Other duty operations will have to wait until the fade operation has finished.

Return

- ESP_ERR_INVALID_ARG Parameter error
- ESP_OK Success
- ESP_ERR_INVALID_STATE Fade function not installed.
- ESP_FAIL Fade function init error

Parameters

- `speed_mode`: Select the LEDC speed_mode, high-speed mode and low-speed mode,
- `channel`: LEDC channel index (0-7), select from ledc_channel_t
- `target_duty`: Target duty of fading.(0 - (2 ** duty_resolution - 1)))
- `max_fade_time_ms`: The maximum time of the fading (ms).
- `fade_mode`: choose blocking or non-blocking mode

esp_err_t **ledc_set_fade_step_and_start**(*ledc_mode_t speed_mode*, *ledc_channel_t channel*, uint32_t *target_duty*, uint32_t *scale*, uint32_t *cycle_num*, *ledc_fade_mode_t fade_mode*)

A thread-safe API to set and start LEDC fade function.

Note Call ledc_fade_func_install() once before calling this function.

Note If a fade operation is running in progress on that channel, the driver would not allow it to be stopped. Other duty operations will have to wait until the fade operation has finished.

Return

- ESP_ERR_INVALID_ARG Parameter error
- ESP_OK Success
- ESP_ERR_INVALID_STATE Fade function not installed.
- ESP_FAIL Fade function init error

Parameters

- `speed_mode`: Select the LEDC speed_mode, high-speed mode and low-speed mode,
- `channel`: LEDC channel index (0-7), select from ledc_channel_t
- `target_duty`: Target duty of fading [0, (2**duty_resolution) - 1]
- `scale`: Controls the increase or decrease step scale.
- `cycle_num`: increase or decrease the duty every cycle_num cycles
- `fade_mode`: choose blocking or non-blocking mode

Structures

`struct ledc_channel_config_t`

Configuration parameters of LEDC channel for ledc_channel_config function.

Public Members

int **gpio_num**

the LEDC output gpio_num, if you want to use gpio16, gpio_num = 16

ledc_mode_t **speed_mode**

LEDC speed speed_mode, high-speed mode or low-speed mode

ledc_channel_t **channel**

LEDC channel (0 - 7)

ledc_intr_type_t **intr_type**

configure interrupt, Fade interrupt enable or Fade interrupt disable

ledc_timer_t **timer_sel**

Select the timer source of channel (0 - 3)

uint32_t **duty**

LEDC channel duty, the range of duty setting is [0, (2**duty_resolution)]

int **hpoint**

LEDC channel hpoint value, the max value is 0xfffff

`struct ledc_timer_config_t`

Configuration parameters of LEDC Timer timer for ledc_timer_config function.

Public Members

ledc_mode_t **speed_mode**

LEDC speed speed_mode, high-speed mode or low-speed mode

ledc_timer_bit_t **duty_resolution**

LEDC channel duty resolution

ledc_timer_bit_t **bit_num**

Deprecated in ESP-IDF 3.0. This is an alias to 'duty_resolution' for backward compatibility with ESP-IDF 2.1

ledc_timer_t **timer_num**

The timer source of channel (0 - 3)

uint32_t **freq_hz**

LEDC timer frequency (Hz)

Macros

`LEDC_APB_CLK_HZ`

`LEDC_REF_CLK_HZ`

`LEDC_ERR_DUTY`

`LEDC_ERR_VAL`

Type Definitions

`typedef` *intr_handle_t* `ledc_isr_handle_t`

Enumerations

`enum ledc_mode_t`

Values:

`LEDC_HIGH_SPEED_MODE` = 0

LEDC high speed speed_mode

`LEDC_LOW_SPEED_MODE`

LEDC low speed speed_mode

LEDC_SPEED_MODE_MAX
LEDC speed limit

enum ledc_intr_type_t
Values:

LEDC_INTR_DISABLE = 0
Disable LEDC interrupt

LEDC_INTR_FADE_END
Enable LEDC interrupt

enum ledc_duty_direction_t
Values:

LEDC_DUTY_DIR_DECREASE = 0
LEDC duty decrease direction

LEDC_DUTY_DIR_INCREASE = 1
LEDC duty increase direction

LEDC_DUTY_DIR_MAX

enum ledc_clk_src_t
Values:

LEDC_REF_TICK = 0
LEDC timer clock divided from reference tick (1Mhz)

LEDC_APB_CLK
LEDC timer clock divided from APB clock (80Mhz)

enum ledc_timer_t
Values:

LEDC_TIMER_0 = 0
LEDC timer 0

LEDC_TIMER_1
LEDC timer 1

LEDC_TIMER_2
LEDC timer 2

LEDC_TIMER_3
LEDC timer 3

LEDC_TIMER_MAX

enum ledc_channel_t
Values:

`LEDC_CHANNEL_0` = 0
LEDC channel 0

`LEDC_CHANNEL_1`
LEDC channel 1

`LEDC_CHANNEL_2`
LEDC channel 2

`LEDC_CHANNEL_3`
LEDC channel 3

`LEDC_CHANNEL_4`
LEDC channel 4

`LEDC_CHANNEL_5`
LEDC channel 5

`LEDC_CHANNEL_6`
LEDC channel 6

`LEDC_CHANNEL_7`
LEDC channel 7

`LEDC_CHANNEL_MAX`

`enum ledc_timer_bit_t`
Values:

`LEDC_TIMER_1_BIT` = 1
LEDC PWM duty resolution of 1 bits

`LEDC_TIMER_2_BIT`
LEDC PWM duty resolution of 2 bits

`LEDC_TIMER_3_BIT`
LEDC PWM duty resolution of 3 bits

`LEDC_TIMER_4_BIT`
LEDC PWM duty resolution of 4 bits

`LEDC_TIMER_5_BIT`
LEDC PWM duty resolution of 5 bits

`LEDC_TIMER_6_BIT`
LEDC PWM duty resolution of 6 bits

`LEDC_TIMER_7_BIT`
LEDC PWM duty resolution of 7 bits

`LEDC_TIMER_8_BIT`
LEDC PWM duty resolution of 8 bits

`LEDC_TIMER_9_BIT`
LEDC PWM duty resolution of 9 bits

`LEDC_TIMER_10_BIT`
LEDC PWM duty resolution of 10 bits

`LEDC_TIMER_11_BIT`
LEDC PWM duty resolution of 11 bits

`LEDC_TIMER_12_BIT`
LEDC PWM duty resolution of 12 bits

`LEDC_TIMER_13_BIT`
LEDC PWM duty resolution of 13 bits

`LEDC_TIMER_14_BIT`
LEDC PWM duty resolution of 14 bits

`LEDC_TIMER_15_BIT`
LEDC PWM duty resolution of 15 bits

`LEDC_TIMER_16_BIT`
LEDC PWM duty resolution of 16 bits

`LEDC_TIMER_17_BIT`
LEDC PWM duty resolution of 17 bits

`LEDC_TIMER_18_BIT`
LEDC PWM duty resolution of 18 bits

`LEDC_TIMER_19_BIT`
LEDC PWM duty resolution of 19 bits

`LEDC_TIMER_20_BIT`
LEDC PWM duty resolution of 20 bits

`LEDC_TIMER_BIT_MAX`

`enum ledc_fade_mode_t`
Values:

`LEDC_FADE_NO_WAIT` = 0
LEDC fade function will return immediately

`LEDC_FADE_WAIT_DONE`
LEDC fade function will block until fading to the target duty

`LEDC_FADE_MAX`

3.3.8 MCPWM

ESP32 has two MCPWM units which can be used to control different types of motors. Each unit has three pairs of PWM outputs.

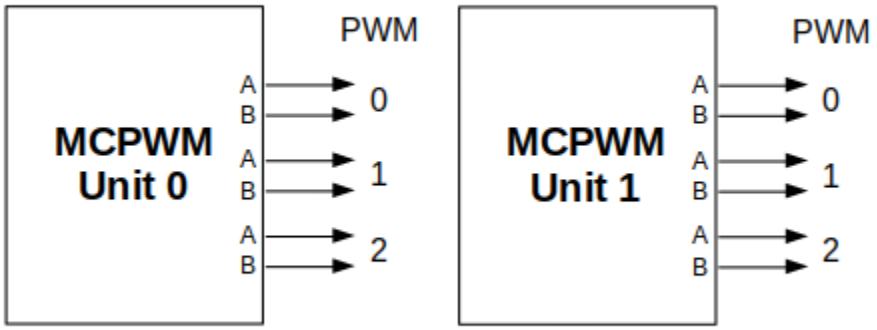

图 15: MCPWM Overview

Further in documentation the outputs of a single unit are labeled `PWMxA` / `PWMxB`.

More detailed block diagram of the MCPWM unit is shown below. Each A/B pair may be clocked by any one of the three timers Timer 0, 1 and 2. The same timer may be used to clock more than one pair of PWM outputs. Each unit is also able to collect inputs such as `SYNC SIGNALS`, detect `FAULT SIGNALS` like motor overcurrent or overvoltage, as well as obtain feedback with `CAPTURE SIGNALS` on e.g. a rotor position.

Description of this API starts with configuration of MCPWM's **Timer** and **Operator** submodules to provide the basic motor control functionality. Then it discusses more advanced submodules and functionalities of a **Fault Handler**, signal **Capture**, **Carrier** and **Interrupts**.

Contents

- *Configure* a basic functionality of the outputs
- *Operate* the outputs to drive a motor
- *Adjust* how the motor is driven
- *Capture* external signals to provide additional control over the outputs
- Use *Fault Handler* to detect and manage faults
- Add a higher frequency *Carrier*, if output signals are passed through an isolation transformer
- Configuration and handling of *Interrupts*.

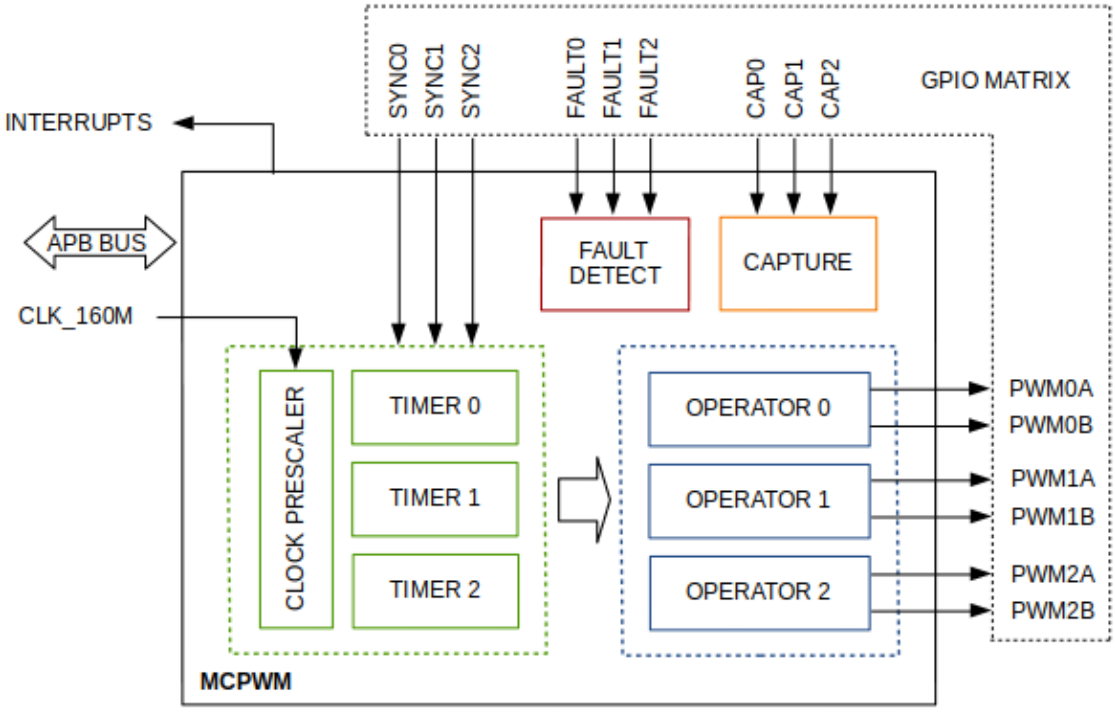

图 16: MCPWM Block Diagram

Configure

The scope of configuration depends on the motor type, in particular how many outputs and inputs are required, and what will be the sequence of signals to drive the motor.

In this case we will describe a simple configuration to control a brushed DC motor that is using only some of the available MCPWM' s resources. An example circuit is shown below. It includes a H-Bridge to switch polarization of a voltage applied to the motor (M) and to provide sufficient current to drive it.

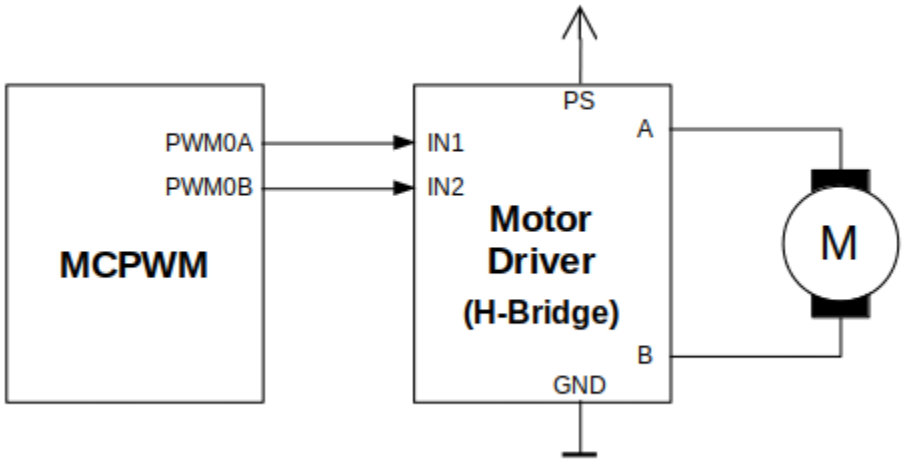

图 17: Example of Brushed DC Motor Control with MCPWM

Configuration covers the following steps:

1. Selection of a MPWN unit that will be used to drive the motor. There are two units available on-board of ESP32 and enumerated in *mcpwm_unit_t*.
2. Initialization of two GPIOs as output signals within selected unit by calling *mcpwm_gpio_init()*. The two output signals are typically used to command the motor to rotate right or left. All available signal options are listed in *mcpwm_io_signals_t*. To set more than a single pin at a time, use function *mcpwm_set_pin()* together with *mcpwm_pin_config_t*.
3. Selection of a timer. There are three timers available within the unit. The timers are listed in *mcpwm_timer_t*.
4. Setting of the timer frequency and initial duty within *mcpwm_config_t* structure.
5. Calling of *mcpwm_init()* with the above parameters to make the configuration effective.

Operate

To operate a motor connected to the MCPWM unit, e.g. turn it left or right, or vary the speed, we should apply some control signals to the unit' s outputs. The outputs are organized into three pairs. Within a pair they are labeled "A" and "B" and driven by a submodule called an "Operator". To provide a PWM signal, the Operator itself should be clocked by one of three available Timers. To make the API simpler, each Timer is automatically associated by the API to drive an Operator of the same index, e.g. Timer 0 is associated with Operator 0.

There are the following basic ways to control the outputs:

- We can drive particular signal steady high or steady low with function *mcpwm_set_signal_high()* or *mcpwm_set_signal_low()*. This will make the motor to turn with a maximum speed or stop. Depending on selected output A or B the motor will rotate either right or left.
- Another option is to drive the outputs with the PWM signal by calling *mcpwm_start()* or *mcpwm_stop()*. The motor speed will be proportional to the PWM duty.
- To vary PWM' s duty call *mcpwm_set_duty()* and provide the duty value in %. Optionally, you may call *mcpwm_set_duty_in_us()*, if you prefer to set the duty in microseconds. Checking of currently set value is possible by calling *mcpwm_get_duty()*. Phase of the PWM signal may be altered by calling *mcpwm_set_duty_type()*. The duty is set individually for each A and B output using *mcpwm_operator_t* in specific function calls. The duty value refers either to high or low output signal duration. This is configured when calling *mcpwm_init()*, as discussed in section *Configure*, and selecting one of options from *mcpwm_duty_type_t*.

注解: Call function *mcpwm_set_duty_type()* every time after *mcpwm_set_signal_high()* or *mcpwm_set_signal_low()* to resume with previously set duty cycle.

Adjust

There are couple of ways to adjust a signal on the outputs and changing how the motor operates.

- Set specific PWM frequency by calling *mcpwm_set_frequency()*. This may be required to adjust to electrical or mechanical characteristics of particular motor and driver. To check what frequency is set, use function *mcpwm_get_frequency()*.
- Introduce a dead time between outputs A and B when they are changing the state to reverse direction of the motor rotation. This is to make up for on/off switching delay of the motor driver FETs. The dead time options are defined in *mcpwm_deadtime_type_t* and enabled by calling *mcpwm_deadtime_enable()*. To disable this functionality call *mcpwm_deadtime_disable()*.
- Synchronize outputs of operator submodules, e.g. to get raising edge of PWM0A/B and PWM1A/B to start exactly at the same time, or shift them between each other by a given phase. Synchronization is triggered by `SYNC SIGNALS` shown on the *block diagram* of the MCPWM above, and defined in

mcpwm_sync_signal_t. To attach the signal to a GPIO call *mcpwm_gpio_init()*. You can then enable synchronization with function *mcpwm_sync_enable()*. As input parameters provide MCPWM unit, timer to synchronize, the synchronization signal and a phase to delay the timer.

注解: Synchronization signals are referred to using two different enumerations. First one *mcpwm_io_signals_t* is used together with function *mcpwm_gpio_init()* when selecting a GPIO as the signal input source. The second one *mcpwm_sync_signal_t* is used when enabling or disabling synchronization with *mcpwm_sync_enable()* or *mcpwm_sync_disable()*.

- Vary the pattern of the A/B output signals by getting MCPWM counters to count up, down and up/down (automatically changing the count direction). Respective configuration is done when calling *mcpwm_init()*, as discussed in section *Configure*, and selecting one of counter types from *mcpwm_counter_type_t*. For explanation of how A/B PWM output signals are generated please refer to ESP32 Technical Reference Manual.

Capture

One of requirements of BLDC (Brushless DC, see figure below) motor control is sensing of the rotor position. To facilitate this task each MCPWM unit provides three sensing inputs together with dedicated hardware. The hardware is able to detect the input signal' s edge and measure time between signals. As result the control software is simpler and the CPU power may be used for other tasks.

The capture functionality may be used for other types of motors or tasks. The functionality is enabled in two steps:

1. Configuration of GPIOs to act as the capture signal inputs by calling functions *mcpwm_gpio_init()* or *mcpwm_set_pin()*, that were described in section *Configure*.
2. Enabling of the functionality itself by invoking *mcpwm_capture_enable()*, selecting desired signal input from *mcpwm_capture_signal_t*, setting the signal edge with *mcpwm_capture_on_edge_t* and the signal count prescaler.

Within the second step above a 32-bit capture timer is enabled. The timer runs continuously driven by the APB clock. The clock frequency is typically 80 MHz. On each capture event the capture timer' s value is stored in time-stamp register that may be then checked by calling *mcpwm_capture_signal_get_value()*. The edge of the last signal may be checked with *mcpwm_capture_signal_get_edge()*.

If not required anymore, the capture functionality may be disabled with *mcpwm_capture_disable()*.

Fault Handler

Each unit of the MCPWM is able to sense external signals with information about failure of the motor, the motor driver or any other device connected to the MCPWM. There are three fault inputs per unit that may

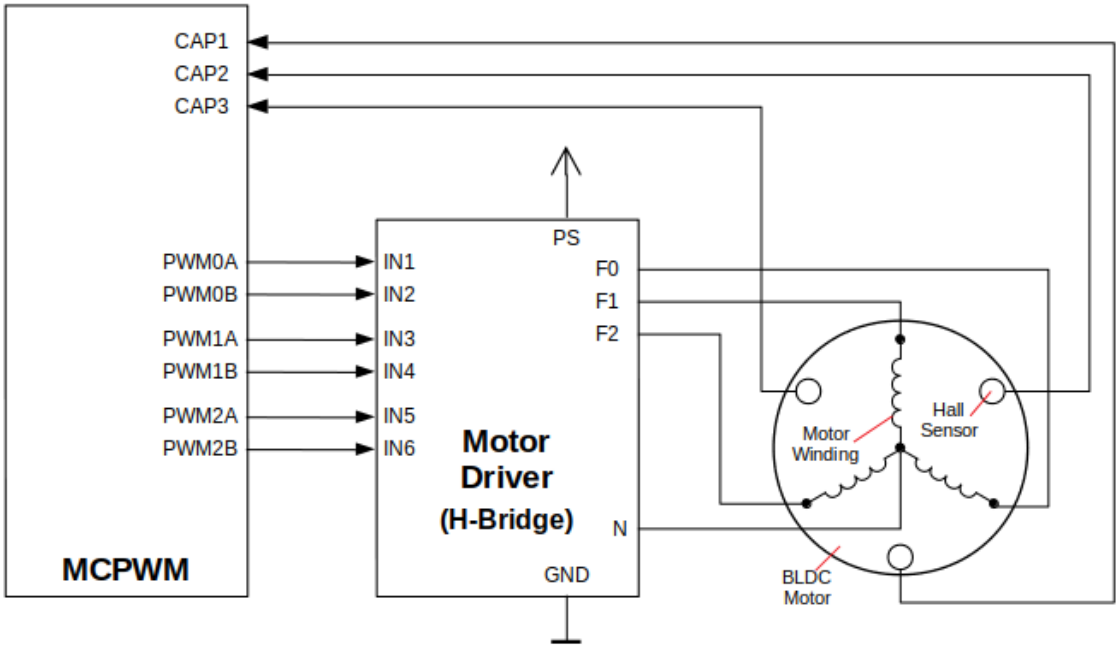

图 18: Example of Brushless DC Motor Control with MCPWM

be routed to user selectable GPIOs. The MCPWM may be configured to perform one of four predefined actions on A/B outputs when a fault signal is received:

- lock current state of the output
- set the output low
- set the output high
- toggle the output

The user should determine possible failure modes of the motor and what action should be performed on detection of particular fault, e.g. drive all outputs low for a brushed motor, or lock current state for a stepper motor, etc. As result of this action the motor should be put into a safe state to reduce likelihood of a damage caused by the fault.

The fault handler functionality is enabled in two steps:

1. Configuration of GPIOs to act as fault signal inputs. This is done in analogous way as described for capture signals in section above. It includes setting the signal level to trigger the fault as defined in *mcpwm_fault_input_level_t*.
2. Initialization of the fault handler by calling either *mcpwm_fault_set_oneshot_mode()* or *mcpwm_fault_set_cyc_mode()*. These functions set the mode that MCPWM should operate once fault signal becomes inactive. There are two modes possible:

- State of MCPWM unit will be locked until reset - *mcpwm_fault_set_oneshot_mode()*.
- The MCPWM will resume operation once fault signal becoming inactive - *mcpwm_fault_set_cyc_mode()*.

The function call parameters include selection of one of three fault inputs defined in *mcpwm_fault_signal_t* and specific action on outputs A and B defined in *mcpwm_action_on_pwmxa_t* and *mcpwm_action_on_pwmxb_t*.

Particular fault signal may be disabled at the runtime by calling *mcpwm_fault_deinit()*.

Carrier

The MCPWM has a carrier submodule used if galvanic isolation from the motor driver is required by passing the A/B output signals through transformers. Any of A and B output signals may be at 100% duty and not changing whenever motor is required to run steady at the full load. Coupling of non alternating signals with a transformer is problematic, so the signals are modulated by the carrier submodule to create an AC waveform, to make the coupling possible.

To use the carrier submodule, it should be first initialized by calling *mcpwm_carrier_init()*. The carrier parameters are defined in *mcpwm_carrier_config_t* structure invoked within the function call. Then the carrier functionality may be enabled by calling *mcpwm_carrier_enable()*.

The carrier parameters may be then alerted at a runtime by calling dedicated functions to change individual fields of the *mcpwm_carrier_config_t* structure, like *mcpwm_carrier_set_period()*, *mcpwm_carrier_set_duty_cycle()*, *mcpwm_carrier_output_invert()*, etc.

This includes enabling and setting duration of the first pulse of the career with *mcpwm_carrier_oneshot_mode_enable()*. For more details please refer to "PWM Carrier Submodule" section of the ESP32 Technical Reference Manual.

To disable carrier functionality call *mcpwm_carrier_disable()*.

Interrupts

Registering of the MCPWM interrupt handler is possible by calling *mcpwm_isr_register()*.

Application Example

Examples of using MCPWM for motor control: peripherals/mcpwm:

- Demonstration how to use each submodule of the MCPWM - peripherals/mcpwm/mcpwm_basic_config
- Control of BLDC (brushless DC) motor with hall sensor feedback - peripherals/mcpwm/mcpwm_bldc_control
- Brushed DC motor control - peripherals/mcpwm/mcpwm_brushed_dc_control

- Servo motor control - peripherals/mcpwm/mcpwm_servo_control

API Reference

Header File

- driver/include/driver/mcpwm.h

Functions

esp_err_t **mcpwm_gpio_init**(*mcpwm_unit_t mcpwm_num*, *mcpwm_io_signals_t io_signal*, int *gpio_num*)

This function initializes each gpio signal for MCPWM.

Note This function initializes one gpio at a time.

Return

- ESP_OK Success
- ESP_ERR_INVALID_ARG Parameter error

Parameters

- `mcpwm_num`: set MCPWM unit(0-1)
- `io_signal`: set MCPWM signals, each MCPWM unit has 6 output(MCPWMXA, MCPWMXB) and 9 input(SYNC_X, FAULT_X, CAP_X) 'X' is timer_num(0-2)
- `gpio_num`: set this to configure gpio for MCPWM, if you want to use gpio16, gpio_num = 16

esp_err_t **mcpwm_set_pin**(*mcpwm_unit_t mcpwm_num*, **const** *mcpwm_pin_config_t* **mcpwm_pin*)

Initialize MCPWM gpio structure.

Note This function can be used to initialize more then one gpio at a time.

Return

- ESP_OK Success
- ESP_ERR_INVALID_ARG Parameter error

Parameters

- `mcpwm_num`: set MCPWM unit(0-1)
- `mcpwm_pin`: MCPWM pin structure

esp_err_t **mcpwm_init**(*mcpwm_unit_t mcpwm_num*, *mcpwm_timer_t timer_num*, **const** *mcpwm_config_t* **mcpwm_conf*)

Initialize MCPWM parameters.

Return

- ESP_OK Success
- ESP_ERR_INVALID_ARG Parameter error

Parameters

- `mcpwm_num`: set MCPWM unit(0-1)
- `timer_num`: set timer number(0-2) of MCPWM, each MCPWM unit has 3 timers
- `mcpwm_conf`: configure structure *mcpwm_config_t*

esp_err_t **mcpwm_set_frequency**(*mcpwm_unit_t mcpwm_num*, *mcpwm_timer_t timer_num*, uint32_t *frequency*)

Set frequency(in Hz) of MCPWM timer.

Return

- ESP_OK Success
- ESP_ERR_INVALID_ARG Parameter error

Parameters

- `mcpwm_num`: set MCPWM unit(0-1)
- `timer_num`: set timer number(0-2) of MCPWM, each MCPWM unit has 3 timers
- `frequency`: set the frequency in Hz of each timer

esp_err_t **mcpwm_set_duty**(*mcpwm_unit_t mcpwm_num*, *mcpwm_timer_t timer_num*, *mcpwm_operator_t op_num*, float *duty*)

Set duty cycle of each operator(MCPWMXA/MCPWMXB)

Return

- ESP_OK Success
- ESP_ERR_INVALID_ARG Parameter error

Parameters

- `mcpwm_num`: set MCPWM unit(0-1)
- `timer_num`: set timer number(0-2) of MCPWM, each MCPWM unit has 3 timers
- `op_num`: set the operator(MCPWMXA/MCPWMXB), 'X' is timer number selected
- `duty`: set duty cycle in %(i.e for 62.3% duty cycle, duty = 62.3) of each operator

esp_err_t **mcpwm_set_duty_in_us**(*mcpwm_unit_t mcpwm_num*, *mcpwm_timer_t timer_num*, *mcpwm_operator_t op_num*, uint32_t *duty*)

Set duty cycle of each operator(MCPWMXA/MCPWMXB) in us.

Return

- ESP_OK Success
- ESP_ERR_INVALID_ARG Parameter error

Parameters

- `mcpwm_num`: set MCPWM unit(0-1)
- `timer_num`: set timer number(0-2) of MCPWM, each MCPWM unit has 3 timers
- `op_num`: set the operator(MCPWMXA/MCPWMXB), 'x' is timer number selected
- `duty`: set duty value in microseconds of each operator

esp_err_t **mcpwm_set_duty_type**(*mcpwm_unit_t mcpwm_num*, *mcpwm_timer_t timer_num*, *mcpwm_operator_t op_num*, *mcpwm_duty_type_t duty_num*)

Set duty either active high or active low(out of phase/inverted)

Note Call this function every time after mcpwm_set_signal_high or mcpwm_set_signal_low to resume with previously set duty cycle

Return

- ESP_OK Success
- ESP_ERR_INVALID_ARG Parameter error

Parameters

- `mcpwm_num`: set MCPWM unit(0-1)
- `timer_num`: set timer number(0-2) of MCPWM, each MCPWM unit has 3 timers
- `op_num`: set the operator(MCPWMXA/MCPWMXB), 'x' is timer number selected
- `duty_num`: set active low or active high duty type

uint32_t **mcpwm_get_frequency**(*mcpwm_unit_t mcpwm_num*, *mcpwm_timer_t timer_num*)

Get frequency of timer.

Return

- frequency of timer

Parameters

- `mcpwm_num`: set MCPWM unit(0-1)
- `timer_num`: set timer number(0-2) of MCPWM, each MCPWM unit has 3 timers

float **mcpwm_get_duty**(*mcpwm_unit_t mcpwm_num*, *mcpwm_timer_t timer_num*, *mcpwm_operator_t op_num*)

Get duty cycle of each operator.

Return

- duty cycle in % of each operator(56.7 means duty is 56.7%)

Parameters

- `mcpwm_num`: set MCPWM unit(0-1)
- `timer_num`: set timer number(0-2) of MCPWM, each MCPWM unit has 3 timers
- `op_num`: set the operator(MCPWMXA/MCPWMXB), 'x' is timer number selected

esp_err_t **mcpwm_set_signal_high**(*mcpwm_unit_t mcpwm_num*, *mcpwm_timer_t timer_num*, *mcpwm_operator_t op_num*)

Use this function to set MCPWM signal high.

Return

- ESP_OK Success
- ESP_ERR_INVALID_ARG Parameter error

Parameters

- `mcpwm_num`: set MCPWM unit(0-1)
- `timer_num`: set timer number(0-2) of MCPWM, each MCPWM unit has 3 timers
- `op_num`: set the operator(MCPWMXA/MCPWMXB), 'x' is timer number selected

esp_err_t **mcpwm_set_signal_low**(*mcpwm_unit_t mcpwm_num*, *mcpwm_timer_t timer_num*, *mcpwm_operator_t op_num*)

Use this function to set MCPWM signal low.

Return

- ESP_OK Success
- ESP_ERR_INVALID_ARG Parameter error

Parameters

- `mcpwm_num`: set MCPWM unit(0-1)
- `timer_num`: set timer number(0-2) of MCPWM, each MCPWM unit has 3 timers
- `op_num`: set the operator(MCPWMXA/MCPWMXB), 'x' is timer number selected

esp_err_t **mcpwm_start**(*mcpwm_unit_t mcpwm_num*, *mcpwm_timer_t timer_num*)

Start MCPWM signal on timer 'x'.

Return

- ESP_OK Success
- ESP_ERR_INVALID_ARG Parameter error

Parameters

- `mcpwm_num`: set MCPWM unit(0-1)
- `timer_num`: set timer number(0-2) of MCPWM, each MCPWM unit has 3 timers

esp_err_t **mcpwm_stop**(*mcpwm_unit_t mcpwm_num*, *mcpwm_timer_t timer_num*)

Start MCPWM signal on timer 'x'.

Return

- ESP_OK Success
- ESP_ERR_INVALID_ARG Parameter error

Parameters

- `mcpwm_num`: set MCPWM unit(0-1)
- `timer_num`: set timer number(0-2) of MCPWM, each MCPWM unit has 3 timers

esp_err_t **mcpwm_carrier_init**(*mcpwm_unit_t mcpwm_num*, *mcpwm_timer_t timer_num*, **const** *mcpwm_carrier_config_t *carrier_conf*)

Initialize carrier configuration.

Return

- ESP_OK Success
- ESP_ERR_INVALID_ARG Parameter error

Parameters

- `mcpwm_num`: set MCPWM unit(0-1)
- `timer_num`: set timer number(0-2) of MCPWM, each MCPWM unit has 3 timers
- `carrier_conf`: configure structure *mcpwm_carrier_config_t*

esp_err_t **mcpwm_carrier_enable**(*mcpwm_unit_t mcpwm_num*, *mcpwm_timer_t timer_num*)

Enable MCPWM carrier submodule, for respective timer.

Return

- ESP_OK Success
- ESP_ERR_INVALID_ARG Parameter error

Parameters

- `mcpwm_num`: set MCPWM unit(0-1)
- `timer_num`: set timer number(0-2) of MCPWM, each MCPWM unit has 3 timers

esp_err_t **mcpwm_carrier_disable**(*mcpwm_unit_t mcpwm_num*, *mcpwm_timer_t timer_num*)

Disable MCPWM carrier submodule, for respective timer.

Return

- ESP_OK Success
- ESP_ERR_INVALID_ARG Parameter error

Parameters

- `mcpwm_num`: set MCPWM unit(0-1)
- `timer_num`: set timer number(0-2) of MCPWM, each MCPWM unit has 3 timers

esp_err_t **mcpwm_carrier_set_period**(*mcpwm_unit_t mcpwm_num*, *mcpwm_timer_t timer_num*, uint8_t *carrier_period*)

Set period of carrier.

Return

- ESP_OK Success
- ESP_ERR_INVALID_ARG Parameter error

Parameters

- `mcpwm_num`: set MCPWM unit(0-1)
- `timer_num`: set timer number(0-2) of MCPWM, each MCPWM unit has 3 timers
- `carrier_period`: set the carrier period of each timer, carrier period = (carrier_period + 1)*800ns (carrier_period <= 15)

esp_err_t **mcpwm_carrier_set_duty_cycle**(*mcpwm_unit_t mcpwm_num*, *mcpwm_timer_t timer_num*, uint8_t *carrier_duty*)

Set duty_cycle of carrier.

Return

- ESP_OK Success
- ESP_ERR_INVALID_ARG Parameter error

Parameters

- `mcpwm_num`: set MCPWM unit(0-1)
- `timer_num`: set timer number(0-2) of MCPWM, each MCPWM unit has 3 timers

- `carrier_duty`: set duty_cycle of carrier , carrier duty cycle = carrier_duty*12.5% (chop_duty <= 7)

esp_err_t **mcpwm_carrier_oneshot_mode_enable**(*mcpwm_unit_t mcpwm_num*, *mcpwm_timer_t timer_num*, uint8_t *pulse_width*)

Enable and set width of first pulse in carrier oneshot mode.

Return

- ESP_OK Success
- ESP_ERR_INVALID_ARG Parameter error

Parameters

- `mcpwm_num`: set MCPWM unit(0-1)
- `timer_num`: set timer number(0-2) of MCPWM, each MCPWM unit has 3 timers
- `pulse_width`: set pulse width of first pulse in oneshot mode, width = (carrier period)*(pulse_width +1) (pulse_width <= 15)

esp_err_t **mcpwm_carrier_oneshot_mode_disable**(*mcpwm_unit_t mcpwm_num*, *mcpwm_timer_t timer_num*)

Disable oneshot mode, width of first pulse = carrier period.

Return

- ESP_OK Success
- ESP_ERR_INVALID_ARG Parameter error

Parameters

- `mcpwm_num`: set MCPWM unit(0-1)
- `timer_num`: set timer number(0-2) of MCPWM, each MCPWM unit has 3 timers

esp_err_t **mcpwm_carrier_output_invert**(*mcpwm_unit_t mcpwm_num*, *mcpwm_timer_t timer_num*, *mcpwm_carrier_out_ivt_t carrier_ivt_mode*)

Enable or disable carrier output inversion.

Return

- ESP_OK Success
- ESP_ERR_INVALID_ARG Parameter error

Parameters

- `mcpwm_num`: set MCPWM unit(0-1)
- `timer_num`: set timer number(0-2) of MCPWM, each MCPWM unit has 3 timers

- `carrier_ivt_mode`: enable or disable carrier output inversion

esp_err_t **mcpwm_deadtime_enable**(*mcpwm_unit_t mcpwm_num*, *mcpwm_timer_t timer_num*, *mcpwm_deadtime_type_t dt_mode*, uint32_t *red*, uint32_t *fed*)

Enable and initialize deadtime for each MCPWM timer.

Return

- ESP_OK Success
- ESP_ERR_INVALID_ARG Parameter error

Parameters

- `mcpwm_num`: set MCPWM unit(0-1)
- `timer_num`: set timer number(0-2) of MCPWM, each MCPWM unit has 3 timers
- `dt_mode`: set deadtime mode
- `red`: set rising edge delay = red*100ns
- `fed`: set rising edge delay = fed*100ns

esp_err_t **mcpwm_deadtime_disable**(*mcpwm_unit_t mcpwm_num*, *mcpwm_timer_t timer_num*)

Disable deadtime on MCPWM timer.

Return

- ESP_OK Success
- ESP_ERR_INVALID_ARG Parameter error

Parameters

- `mcpwm_num`: set MCPWM unit(0-1)
- `timer_num`: set timer number(0-2) of MCPWM, each MCPWM unit has 3 timers

esp_err_t **mcpwm_fault_init**(*mcpwm_unit_t mcpwm_num*, *mcpwm_fault_input_level_t intput_level*, *mcpwm_fault_signal_t fault_sig*)

Initialize fault submodule, currently low level triggering is not supported.

Return

- ESP_OK Success
- ESP_ERR_INVALID_ARG Parameter error

Parameters

- `mcpwm_num`: set MCPWM unit(0-1)
- `intput_level`: set fault signal level, which will cause fault to occur

- `fault_sig`: set the fault pin, which needs to be enabled

esp_err_t **mcpwm_fault_set_oneshot_mode**(*mcpwm_unit_t mcpwm_num*, *mcpwm_timer_t timer_num*, *mcpwm_fault_signal_t fault_sig*, *mcpwm_action_on_pwmxa_t action_on_pwmxa*, *mcpwm_action_on_pwmxb_t action_on_pwmxb*)

Set oneshot mode on fault detection, once fault occur in oneshot mode reset is required to resume MCPWM signals.

Note currently low level triggering is not supported

Return

- ESP_OK Success
- ESP_ERR_INVALID_ARG Parameter error

Parameters

- `mcpwm_num`: set MCPWM unit(0-1)
- `timer_num`: set timer number(0-2) of MCPWM, each MCPWM unit has 3 timers
- `fault_sig`: set the fault pin, which needs to be enabled for oneshot mode
- `action_on_pwmxa`: action to be taken on MCPWMXA when fault occurs, either no change or high or low or toggle
- `action_on_pwmxb`: action to be taken on MCPWMXB when fault occurs, either no change or high or low or toggle

esp_err_t **mcpwm_fault_set_cyc_mode**(*mcpwm_unit_t mcpwm_num*, *mcpwm_timer_t timer_num*, *mcpwm_fault_signal_t fault_sig*, *mcpwm_action_on_pwmxa_t action_on_pwmxa*, *mcpwm_action_on_pwmxb_t action_on_pwmxb*)

Set cycle-by-cycle mode on fault detection, once fault occur in cyc mode MCPWM signal resumes as soon as fault signal becomes inactive.

Note currently low level triggering is not supported

Return

- ESP_OK Success
- ESP_ERR_INVALID_ARG Parameter error

Parameters

- `mcpwm_num`: set MCPWM unit(0-1)
- `timer_num`: set timer number(0-2) of MCPWM, each MCPWM unit has 3 timers
- `fault_sig`: set the fault pin, which needs to be enabled for cyc mode

- `action_on_pwmxa`: action to be taken on MCPWMXA when fault occurs, either no change or high or low or toggle
- `action_on_pwmxb`: action to be taken on MCPWMXB when fault occurs, either no change or high or low or toggle

esp_err_t **mcpwm_fault_deinit**(*mcpwm_unit_t mcpwm_num*, *mcpwm_fault_signal_t fault_sig*)

Disable fault signal.

Return

- ESP_OK Success
- ESP_ERR_INVALID_ARG Parameter error

Parameters

- `mcpwm_num`: set MCPWM unit(0-1)
- `fault_sig`: fault pin, which needs to be disabled

esp_err_t **mcpwm_capture_enable**(*mcpwm_unit_t mcpwm_num*, *mcpwm_capture_signal_t cap_sig*, *mcpwm_capture_on_edge_t cap_edge*, uint32_t *num_of_pulse*)

Initialize capture submodule.

Return

- ESP_OK Success
- ESP_ERR_INVALID_ARG Parameter error

Parameters

- `mcpwm_num`: set MCPWM unit(0-1)
- `cap_edge`: set capture edge, BIT(0) - negative edge, BIT(1) - positive edge
- `cap_sig`: capture pin, which needs to be enabled
- `num_of_pulse`: count time between rising/falling edge between 2 *(pulses mentioned), counter uses APB_CLK

esp_err_t **mcpwm_capture_disable**(*mcpwm_unit_t mcpwm_num*, *mcpwm_capture_signal_t cap_sig*)

Disable capture signal.

Return

- ESP_OK Success
- ESP_ERR_INVALID_ARG Parameter error

Parameters

- `mcpwm_num`: set MCPWM unit(0-1)
- `cap_sig`: capture pin, which needs to be disabled

uint32_t **mcpwm_capture_signal_get_value**(*mcpwm_unit_t* *mcpwm_num*, *mcpwm_capture_signal_t* *cap_sig*)

Get capture value.

Return Captured value

Parameters

- `mcpwm_num`: set MCPWM unit(0-1)
- `cap_sig`: capture pin on which value is to be measured

uint32_t **mcpwm_capture_signal_get_edge**(*mcpwm_unit_t* *mcpwm_num*, *mcpwm_capture_signal_t* *cap_sig*)

Get edge of capture signal.

Return Capture signal edge: 1 - positive edge, 2 - negtive edge

Parameters

- `mcpwm_num`: set MCPWM unit(0-1)
- `cap_sig`: capture pin of whose edge is to be determined

esp_err_t **mcpwm_sync_enable**(*mcpwm_unit_t* *mcpwm_num*, *mcpwm_timer_t* *timer_num*, *mcpwm_sync_signal_t* *sync_sig*, uint32_t *phase_val*)

Initialize sync submodule.

Return

- ESP_OK Success
- ESP_ERR_INVALID_ARG Parameter error

Parameters

- `mcpwm_num`: set MCPWM unit(0-1)
- `timer_num`: set timer number(0-2) of MCPWM, each MCPWM unit has 3 timers
- `sync_sig`: set the synchronization pin, which needs to be enabled
- `phase_val`: phase value in 1/1000 (for 86.7%, phase_val = 867) which timer moves to on sync signal

esp_err_t **mcpwm_sync_disable**(*mcpwm_unit_t* *mcpwm_num*, *mcpwm_timer_t* *timer_num*)

Disable sync submodule on given timer.

Return

- ESP_OK Success
- ESP_ERR_INVALID_ARG Parameter error

Parameters

- `mcpwm_num`: set MCPWM unit(0-1)
- `timer_num`: set timer number(0-2) of MCPWM, each MCPWM unit has 3 timers

esp_err_t **mcpwm_isr_register**(*mcpwm_unit_t mcpwm_num*, void (*fn))void *
, void *arg, int *intr_alloc_flags*, *intr_handle_t* *handleRegister MCPWM interrupt handler, the handler is an ISR. the handler will be attached to the same CPU core that this function is running on.

Return

- ESP_OK Success
- ESP_ERR_INVALID_ARG Function pointer error.

Parameters

- `mcpwm_num`: set MCPWM unit(0-1)
- `fn`: interrupt handler function.
- `arg`: user-supplied argument passed to the handler function.
- `intr_alloc_flags`: flags used to allocate the interrupt. One or multiple (ORred) ESP_INTR_FLAG_* values. see esp_intr_alloc.h for more info.
- `arg`: parameter for handler function
- `handle`: pointer to return handle. If non-NULL, a handle for the interrupt will be returned here.

Structures

struct mcpwm_pin_config_t

MCPWM pin number for.

Public Members

int **mcpwm0a_out_num**

MCPWM0A out pin

int **mcpwm0b_out_num**

MCPWM0A out pin

int **mcpwm1a_out_num**

MCPWM0A out pin

int **mcpwm1b_out_num**
MCPWM0A out pin

int **mcpwm2a_out_num**
MCPWM0A out pin

int **mcpwm2b_out_num**
MCPWM0A out pin

int **mcpwm_sync0_in_num**
SYNC0 in pin

int **mcpwm_sync1_in_num**
SYNC1 in pin

int **mcpwm_sync2_in_num**
SYNC2 in pin

int **mcpwm_fault0_in_num**
FAULT0 in pin

int **mcpwm_fault1_in_num**
FAULT1 in pin

int **mcpwm_fault2_in_num**
FAULT2 in pin

int **mcpwm_cap0_in_num**
CAP0 in pin

int **mcpwm_cap1_in_num**
CAP1 in pin

int **mcpwm_cap2_in_num**
CAP2 in pin

struct mcpwm_config_t
MCPWM config structure.

Public Members

uint32_t **frequency**
Set frequency of MCPWM in Hz

float **cmpr_a**
Set % duty cycle for operator a(MCPWMXA), i.e for 62.3% duty cycle, duty_a = 62.3

float **cmpr_b**
Set % duty cycle for operator b(MCPWMXB), i.e for 48% duty cycle, duty_b = 48.0

mcpwm_duty_type_t **duty_mode**

Set type of duty cycle

mcpwm_counter_type_t **counter_mode**

Set type of MCPWM counter

struct mcpwm_carrier_config_t

MCPWM config carrier structure.

Public Members

uint8_t **carrier_period**

Set carrier period = (carrier_period + 1)*800ns, carrier_period should be < 16

uint8_t **carrier_duty**

Set carrier duty cycle, carrier_duty should be less than 8 (increment every 12.5%)

uint8_t **pulse_width_in_os**

Set pulse width of first pulse in one shot mode = (carrier period)*(pulse_width_in_os + 1), should be less then 16

mcpwm_carrier_os_t **carrier_os_mode**

Enable or disable carrier oneshot mode

mcpwm_carrier_out_ivt_t **carrier_ivt_mode**

Invert output of carrier

Enumerations

enum mcpwm_io_signals_t

IO signals for the MCPWM.

- 6 MCPWM output pins that generate PWM signals
- 3 MCPWM fault input pins to detect faults like overcurrent, overvoltage, etc.
- 3 MCPWM sync input pins to synchronize MCPWM outputs signals
- 3 MCPWM capture input pins to gather feedback from controlled motors, using e.g. hall sensors

Values:

MCPWM0A = 0

PWM0A output pin

MCPWM0B

PWM0B output pin

`MCPWM1A`
PWM1A output pin

`MCPWM1B`
PWM1B output pin

`MCPWM2A`
PWM2A output pin

`MCPWM2B`
PWM2B output pin

`MCPWM_SYNC_0`
SYNC0 input pin

`MCPWM_SYNC_1`
SYNC1 input pin

`MCPWM_SYNC_2`
SYNC2 input pin

`MCPWM_FAULT_0`
FAULT0 input pin

`MCPWM_FAULT_1`
FAULT1 input pin

`MCPWM_FAULT_2`
FAULT2 input pin

`MCPWM_CAP_0` = 84
CAP0 input pin

`MCPWM_CAP_1`
CAP1 input pin

`MCPWM_CAP_2`
CAP2 input pin

enum mcpwm_unit_t
Select MCPWM unit.

Values:

`MCPWM_UNIT_0` = 0
MCPWM unit0 selected

`MCPWM_UNIT_1`
MCPWM unit1 selected

`MCPWM_UNIT_MAX`
Num of MCPWM units on ESP32

enum mcpwm_timer_t

Select MCPWM timer.

Values:

MCPWM_TIMER_0 = 0

Select MCPWM timer0

MCPWM_TIMER_1

Select MCPWM timer1

MCPWM_TIMER_2

Select MCPWM timer2

MCPWM_TIMER_MAX

Num of MCPWM timers on ESP32

enum mcpwm_operator_t

Select MCPWM operator.

Values:

MCPWM_OPR_A = 0

Select MCPWMXA, where 'X' is timer number

MCPWM_OPR_B

Select MCPWMXB, where 'X' is timer number

MCPWM_OPR_MAX

Num of operators to each timer of MCPWM

enum mcpwm_counter_type_t

Select type of MCPWM counter.

Values:

MCPWM_UP_COUNTER = 1

For asymmetric MCPWM

MCPWM_DOWN_COUNTER

For asymmetric MCPWM

MCPWM_UP_DOWN_COUNTER

For symmetric MCPWM, frequency is half of MCPWM frequency set

MCPWM_COUNTER_MAX

Maximum counter mode

enum mcpwm_duty_type_t

Select type of MCPWM duty cycle mode.

Values:

`MCPWM_DUTY_MODE_0` = 0

Active high duty, i.e. duty cycle proportional to high time for asymmetric MCPWM

`MCPWM_DUTY_MODE_1`

Active low duty, i.e. duty cycle proportional to low time for asymmetric MCPWM, out of phase(inverted) MCPWM

`MCPWM_DUTY_MODE_MAX`

Num of duty cycle modes

enum mcpwm_carrier_os_t

MCPWM carrier oneshot mode, in this mode the width of the first pulse of carrier can be programmed.

Values:

`MCPWM_ONESHOT_MODE_DIS` = 0

Enable oneshot mode

`MCPWM_ONESHOT_MODE_EN`

Disable oneshot mode

enum mcpwm_carrier_out_ivt_t

MCPWM carrier output inversion, high frequency carrier signal active with MCPWM signal is high.

Values:

`MCPWM_CARRIER_OUT_IVT_DIS` = 0

Enable carrier output inversion

`MCPWM_CARRIER_OUT_IVT_EN`

Disable carrier output inversion

enum mcpwm_sync_signal_t

MCPWM select sync signal input.

Values:

`MCPWM_SELECT_SYNC0` = 4

Select SYNC0 as input

`MCPWM_SELECT_SYNC1`

Select SYNC1 as input

`MCPWM_SELECT_SYNC2`

Select SYNC2 as input

enum mcpwm_fault_signal_t

MCPWM select fault signal input.

Values:

`MCPWM_SELECT_F0` = 0

Select F0 as input

`MCPWM_SELECT_F1`
Select F1 as input

`MCPWM_SELECT_F2`
Select F2 as input

enum mcpwm_fault_input_level_t
MCPWM select triggering level of fault signal.

Values:

`MCPWM_LOW_LEVEL_TGR` = 0
Fault condition occurs when fault input signal goes from high to low, currently not supported

`MCPWM_HIGH_LEVEL_TGR`
Fault condition occurs when fault input signal goes low to high

enum mcpwm_action_on_pwmxa_t
MCPWM select action to be taken on MCPWMXA when fault occurs.

Values:

`MCPWM_NO_CHANGE_IN_MCPWMXA` = 0
No change in MCPWMXA output

`MCPWM_FORCE_MCPWMXA_LOW`
Make MCPWMXA output low

`MCPWM_FORCE_MCPWMXA_HIGH`
Make MCPWMXA output high

`MCPWM_TOG_MCPWMXA`
Make MCPWMXA output toggle

enum mcpwm_action_on_pwmxb_t
MCPWM select action to be taken on MCPWMxB when fault occurs.

Values:

`MCPWM_NO_CHANGE_IN_MCPWMXB` = 0
No change in MCPWMXB output

`MCPWM_FORCE_MCPWMXB_LOW`
Make MCPWMXB output low

`MCPWM_FORCE_MCPWMXB_HIGH`
Make MCPWMXB output high

`MCPWM_TOG_MCPWMXB`
Make MCPWMXB output toggle

enum mcpwm_capture_signal_t
MCPWM select capture signal input.

Values:

`MCPWM_SELECT_CAP0` = 0
Select CAP0 as input

`MCPWM_SELECT_CAP1`
Select CAP1 as input

`MCPWM_SELECT_CAP2`
Select CAP2 as input

`enum mcpwm_capture_on_edge_t`
MCPWM select capture starts from which edge.

Values:

`MCPWM_NEG_EDGE` = 0
Capture starts from negative edge

`MCPWM_POS_EDGE`
Capture starts from positive edge

`enum mcpwm_deadtime_type_t`
MCPWM deadtime types, used to generate deadtime, RED refers to rising edge delay and FED refers to falling edge delay.

Values:

`MCPWM_BYPASS_RED` = 0
MCPWMXA = no change, MCPWMXB = falling edge delay

`MCPWM_BYPASS_FED`
MCPWMXA = rising edge delay, MCPWMXB = no change

`MCPWM_ACTIVE_HIGH_MODE`
MCPWMXA = rising edge delay, MCPWMXB = falling edge delay

`MCPWM_ACTIVE_LOW_MODE`
MCPWMXA = compliment of rising edge delay, MCPWMXB = compliment of falling edge delay

`MCPWM_ACTIVE_HIGH_COMPLIMENT_MODE`
MCPWMXA = rising edge delay, MCPWMXB = compliment of falling edge delay

`MCPWM_ACTIVE_LOW_COMPLIMENT_MODE`
MCPWMXA = compliment of rising edge delay, MCPWMXB = falling edge delay

`MCPWM_ACTIVE_RED_FED_FROM_PWMXA`
MCPWMXA = MCPWMXB = rising edge delay as well as falling edge delay, generated from MCPWMXA

`MCPWM_ACTIVE_RED_FED_FROM_PWMXB`
MCPWMXA = MCPWMXB = rising edge delay as well as falling edge delay, generated from

MCPWMXB

`MCPWM_DEADTIME_TYPE_MAX`

3.3.9 Pulse Counter

Introduction

The PCNT (Pulse Counter) module is designed to count the number of rising and/or falling edges of an input signal. Each pulse counter unit has a 16-bit signed counter register and two channels that can be configured to either increment or decrement the counter. Each channel has a signal input that accepts signal edges to be detected, as well as a control input that can be used to enable or disable the signal input. The inputs have optional filters that can be used to discard unwanted glitches in the signal.

Functionality Overview

Description of functionality of this API has been broken down into four sections:

- *Configuration* - describes counter's configuration parameters and how to setup the counter.
- *Operating the Counter* - provides information on control functions to pause, measure and clear the counter.
- *Filtering Pulses* - describes options to filtering pulses and the counter control signals.
- *Using Interrupts* - presents how to trigger interrupts on specific states of the counter.

Configuration

The PCNT module has eight independent counting "units" numbered from 0 to 7. In the API they are referred to using *pcnt_unit_t*. Each unit has two independent channels numbered as 0 and 1 and specified with *pcnt_channel_t*.

The configuration is provided separately per unit's channel using *pcnt_config_t* and covers:

- The unit and the channel number this configuration refers to.
- GPIO numbers of the pulse input and the pulse gate input.
- Two pairs of parameters: *pcnt_ctrl_mode_t* and *pcnt_count_mode_t* to define how the counter reacts depending on the the status of control signal and how counting is done positive / negative edge of the pulses.
- Two limit values (minimum / maximum) that are used to establish watchpoints and trigger interrupts when the pulse count is meeting particular limit.

Setting up of particular channel is then done by calling a function *pcnt_unit_config()* with above *pcnt_config_t* as the input parameter.

To disable the pulse or the control input pin in configuration, provide `PCNT_PIN_NOT_USED` instead of the GPIO number.

Operating the Counter

After doing setup with *pcnt_unit_config()*, the counter immediately starts to operate. The accumulated pulse count can be checked by calling *pcnt_get_counter_value()*.

There are couple of functions that allow to control the counter' s operation: *pcnt_counter_pause()*, *pcnt_counter_resume()* and *pcnt_counter_clear()*

It is also possible to dynamically change the previously set up counter modes with *pcnt_unit_config()* by calling *pcnt_set_mode()*.

If desired, the pulse input pin and the control input pin may be changed "on the fly" using *pcnt_set_pin()*. To disable particular input provide as a function parameter `PCNT_PIN_NOT_USED` instead of the GPIO number.

注解: For the counter not to miss any pulses, the pulse duration should be longer than one APB_CLK cycle (12.5 ns). The pulses are sampled on the edges of the APB_CLK clock and may be missed, if fall between the edges. This applies to counter operation with or without a *filer*.

Filtering Pulses

The PCNT unit features filters on each of the pulse and control inputs, adding the option to ignore short glitches in the signals.

The length of ignored pulses is provided in APB_CLK clock cycles by calling *pcnt_set_filter_value()*. The current filter setting may be checked with *pcnt_get_filter_value()*. The APB_CLK clock is running at 80 MHz.

The filter is put into operation / suspended by calling *pcnt_filter_enable()* / *pcnt_filter_disable()*.

Using Interrupts

There are five counter state watch events, defined in *pcnt_evt_type_t*, that are able to trigger an interrupt. The event happens on the pulse counter reaching specific values:

- Minimum or maximum count values: `counter_l_lim` or `counter_h_lim` provided in *pcnt_config_t* as discussed in *Configuration*
- Threshold 0 or Threshold 1 values set using function *pcnt_set_event_value()*.
- Pulse count = 0

To register, enable or disable an interrupt to service the above events, call *pcnt_isr_register()*, *pcnt_intr_enable()*. and *pcnt_intr_disable()*. To enable or disable events on reaching threshold values, you will also need to call functions *pcnt_event_enable()* and *pcnt_event_disable()*.

In order to check what are the threshold values currently set, use function *pcnt_get_event_value()*.

Application Example

Pulse counter with control signal and event interrupt example: peripherals/pcnt.

API Reference

Header File

- driver/include/driver/pcnt.h

Functions

esp_err_t **pcnt_unit_config**(**const** *pcnt_config_t* **pcnt_config*)

Configure Pulse Counter unit.

Note This function will disable three events: PCNT_EVT_L_LIM, PCNT_EVT_H_LIM, PCNT_EVT_ZERO.

Return

- ESP_OK Success
- ESP_ERR_INVALID_ARG Parameter error

Parameters

- `pcnt_config`: Pointer of Pulse Counter unit configure parameter

esp_err_t **pcnt_get_counter_value**(*pcnt_unit_t* *pcnt_unit*, int16_t **count*)

Get pulse counter value.

Return

- ESP_OK Success
- ESP_ERR_INVALID_ARG Parameter error

Parameters

- `pcnt_unit`: Pulse Counter unit number
- `count`: Pointer to accept counter value

esp_err_t **pcnt_counter_pause**(*pcnt_unit_t pcnt_unit*)

Pause PCNT counter of PCNT unit.

Return

- ESP_OK Success
- ESP_ERR_INVALID_ARG Parameter error

Parameters

- `pcnt_unit`: PCNT unit number

esp_err_t **pcnt_counter_resume**(*pcnt_unit_t pcnt_unit*)

Resume counting for PCNT counter.

Return

- ESP_OK Success
- ESP_ERR_INVALID_ARG Parameter error

Parameters

- `pcnt_unit`: PCNT unit number, select from pcnt_unit_t

esp_err_t **pcnt_counter_clear**(*pcnt_unit_t pcnt_unit*)

Clear and reset PCNT counter value to zero.

Return

- ESP_OK Success
- ESP_ERR_INVALID_ARG Parameter error

Parameters

- `pcnt_unit`: PCNT unit number, select from pcnt_unit_t

esp_err_t **pcnt_intr_enable**(*pcnt_unit_t pcnt_unit*)

Enable PCNT interrupt for PCNT unit.

Note Each Pulse counter unit has five watch point events that share the same interrupt. Configure events with pcnt_event_enable() and pcnt_event_disable()

Return

- ESP_OK Success
- ESP_ERR_INVALID_ARG Parameter error

Parameters

- `pcnt_unit`: PCNT unit number

esp_err_t **pcnt_intr_disable**(*pcnt_unit_t pcnt_unit*)

Disable PCNT interrupt for PCNT unit.

Return

- ESP_OK Success
- ESP_ERR_INVALID_ARG Parameter error

Parameters

- `pcnt_unit`: PCNT unit number

esp_err_t **pcnt_event_enable**(*pcnt_unit_t unit*, *pcnt_evt_type_t evt_type*)

Enable PCNT event of PCNT unit.

Return

- ESP_OK Success
- ESP_ERR_INVALID_ARG Parameter error

Parameters

- `unit`: PCNT unit number
- `evt_type`: Watch point event type. All enabled events share the same interrupt (one interrupt per pulse counter unit).

esp_err_t **pcnt_event_disable**(*pcnt_unit_t unit*, *pcnt_evt_type_t evt_type*)

Disable PCNT event of PCNT unit.

Return

- ESP_OK Success
- ESP_ERR_INVALID_ARG Parameter error

Parameters

- `unit`: PCNT unit number
- `evt_type`: Watch point event type. All enabled events share the same interrupt (one interrupt per pulse counter unit).

esp_err_t **pcnt_set_event_value**(*pcnt_unit_t unit*, *pcnt_evt_type_t evt_type*, int16_t *value*)

Set PCNT event value of PCNT unit.

Return

- ESP_OK Success
- ESP_ERR_INVALID_ARG Parameter error

Parameters

- `unit`: PCNT unit number
- `evt_type`: Watch point event type. All enabled events share the same interrupt (one interrupt per pulse counter unit).
- `value`: Counter value for PCNT event

esp_err_t **pcnt_get_event_value**(*pcnt_unit_t unit*, *pcnt_evt_type_t evt_type*, int16_t **value*)

Get PCNT event value of PCNT unit.

Return

- ESP_OK Success
- ESP_ERR_INVALID_ARG Parameter error

Parameters

- `unit`: PCNT unit number
- `evt_type`: Watch point event type. All enabled events share the same interrupt (one interrupt per pulse counter unit).
- `value`: Pointer to accept counter value for PCNT event

esp_err_t **pcnt_isr_register**(void (***fn*))void *

, void ***arg*, int *intr_alloc_flags*, *pcnt_isr_handle_t* ***handle*Register PCNT interrupt handler, the handler is an ISR. The handler will be attached to the same CPU core that this function is running on. Please do not use pcnt_isr_service_install if this function was called.

Return

- ESP_OK Success
- ESP_ERR_NOT_FOUND Can not find the interrupt that matches the flags.
- ESP_ERR_INVALID_ARG Function pointer error.

Parameters

- `fn`: Interrupt handler function.
- `arg`: Parameter for handler function
- `intr_alloc_flags`: Flags used to allocate the interrupt. One or multiple (ORred) ESP_INTR_FLAG_* values. See esp_intr_alloc.h for more info.
- `handle`: Pointer to return handle. If non-NULL, a handle for the interrupt will be returned here. Calling esp_intr_free to unregister this ISR service if needed, but only if the handle is not NULL.

esp_err_t **pcnt_set_pin**(*pcnt_unit_t unit*, *pcnt_channel_t channel*, int *pulse_io*, int *ctrl_io*)

Configure PCNT pulse signal input pin and control input pin.

Note Set the signal input to PCNT_PIN_NOT_USED if unused.

Return

- ESP_OK Success
- ESP_ERR_INVALID_ARG Parameter error

Parameters

- `unit`: PCNT unit number
- `channel`: PCNT channel number
- `pulse_io`: Pulse signal input GPIO
- `ctrl_io`: Control signal input GPIO

esp_err_t **pcnt_filter_enable**(*pcnt_unit_t unit*)

Enable PCNT input filter.

Return

- ESP_OK Success
- ESP_ERR_INVALID_ARG Parameter error

Parameters

- `unit`: PCNT unit number

esp_err_t **pcnt_filter_disable**(*pcnt_unit_t unit*)

Disable PCNT input filter.

Return

- ESP_OK Success
- ESP_ERR_INVALID_ARG Parameter error

Parameters

- `unit`: PCNT unit number

esp_err_t **pcnt_set_filter_value**(*pcnt_unit_t unit*, uint16_t *filter_val*)

Set PCNT filter value.

Note filter_val is a 10-bit value, so the maximum filter_val should be limited to 1023.

Return

- ESP_OK Success
- ESP_ERR_INVALID_ARG Parameter error

Parameters

- `unit`: PCNT unit number
- `filter_val`: PCNT signal filter value, counter in APB_CLK cycles. Any pulses lasting shorter than this will be ignored when the filter is enabled.

esp_err_t **pcnt_get_filter_value**(*pcnt_unit_t unit*, uint16_t **filter_val*)

Get PCNT filter value.

Return

- ESP_OK Success
- ESP_ERR_INVALID_ARG Parameter error

Parameters

- `unit`: PCNT unit number
- `filter_val`: Pointer to accept PCNT filter value.

esp_err_t **pcnt_set_mode**(*pcnt_unit_t unit*, *pcnt_channel_t channel*, *pcnt_count_mode_t pos_mode*, *pcnt_count_mode_t neg_mode*, *pcnt_ctrl_mode_t hctrl_mode*, *pcnt_ctrl_mode_t lctrl_mode*)

Set PCNT counter mode.

Return

- ESP_OK Success
- ESP_ERR_INVALID_ARG Parameter error

Parameters

- `unit`: PCNT unit number
- `channel`: PCNT channel number
- `pos_mode`: Counter mode when detecting positive edge
- `neg_mode`: Counter mode when detecting negative edge
- `hctrl_mode`: Counter mode when control signal is high level
- `lctrl_mode`: Counter mode when control signal is low level

esp_err_t **pcnt_isr_handler_add**(*pcnt_unit_t unit*, void (**isr_handler*))void *

, void **args*Add ISR handler for specified unit.

Call this function after using pcnt_isr_service_install() to install the PCNT driver' s ISR handler service.

The ISR handlers do not need to be declared with IRAM_ATTR, unless you pass the ESP_INTR_FLAG_IRAM flag when allocating the ISR in pcnt_isr_service_install().

This ISR handler will be called from an ISR. So there is a stack size limit (configurable as "ISR stack size" in menuconfig). This limit is smaller compared to a global PCNT interrupt handler due to the additional level of indirection.

Return

- ESP_OK Success
- ESP_ERR_INVALID_ARG Parameter error

Parameters

- `unit`: PCNT unit number
- `isr_handler`: Interrupt handler function.
- `args`: Parameter for handler function

esp_err_t **pcnt_isr_service_install**(int *intr_alloc_flags*)

Install PCNT ISR service.

Note We can manage different interrupt service for each unit. This function will use the default ISR handle service, Calling pcnt_isr_service_uninstall to uninstall the default service if needed. Please do not use pcnt_isr_register if this function was called.

Return

- ESP_OK Success
- ESP_ERR_NO_MEM No memory to install this service
- ESP_ERR_INVALID_STATE ISR service already installed

Parameters

- `intr_alloc_flags`: Flags used to allocate the interrupt. One or multiple (ORred) ESP_INTR_FLAG_* values. See esp_intr_alloc.h for more info.

void **pcnt_isr_service_uninstall**(void)

Uninstall PCNT ISR service, freeing related resources.

esp_err_t **pcnt_isr_handler_remove**(*pcnt_unit_t unit*)

Delete ISR handler for specified unit.

Return

- ESP_OK Success

- ESP_ERR_INVALID_ARG Parameter error

Parameters

- `unit`: PCNT unit number

Structures

`struct pcnt_config_t`

Pulse Counter configuration for a single channel.

Public Members

int **`pulse_gpio_num`**

Pulse input GPIO number, if you want to use GPIO16, enter pulse_gpio_num = 16, a negative value will be ignored

int **`ctrl_gpio_num`**

Control signal input GPIO number, a negative value will be ignored

pcnt_ctrl_mode_t **`lctrl_mode`**

PCNT low control mode

pcnt_ctrl_mode_t **`hctrl_mode`**

PCNT high control mode

pcnt_count_mode_t **`pos_mode`**

PCNT positive edge count mode

pcnt_count_mode_t **`neg_mode`**

PCNT negative edge count mode

int16_t **`counter_h_lim`**

Maximum counter value

int16_t **`counter_l_lim`**

Minimum counter value

pcnt_unit_t **`unit`**

PCNT unit number

pcnt_channel_t **`channel`**

the PCNT channel

Macros

`PCNT_PIN_NOT_USED`

When selected for a pin, this pin will not be used

Type Definitions

typedef *intr_handle_t* pcnt_isr_handle_t

Enumerations

enum pcnt_ctrl_mode_t

Selection of available modes that determine the counter' s action depending on the state of the control signal' s input GPIO.

Note Configuration covers two actions, one for high, and one for low level on the control input

Values:

PCNT_MODE_KEEP = 0

Control mode: won' t change counter mode

PCNT_MODE_REVERSE = 1

Control mode: invert counter mode(increase -> decrease, decrease -> increase)

PCNT_MODE_DISABLE = 2

Control mode: Inhibit counter(counter value will not change in this condition)

PCNT_MODE_MAX

enum pcnt_count_mode_t

Selection of available modes that determine the counter' s action on the edge of the pulse signal' s input GPIO.

Note Configuration covers two actions, one for positive, and one for negative edge on the pulse input

Values:

PCNT_COUNT_DIS = 0

Counter mode: Inhibit counter(counter value will not change in this condition)

PCNT_COUNT_INC = 1

Counter mode: Increase counter value

PCNT_COUNT_DEC = 2

Counter mode: Decrease counter value

PCNT_COUNT_MAX

enum pcnt_unit_t

Selection of all available PCNT units.

Values:

`PCNT_UNIT_0` = 0
PCNT unit 0

`PCNT_UNIT_1` = 1
PCNT unit 1

`PCNT_UNIT_2` = 2
PCNT unit 2

`PCNT_UNIT_3` = 3
PCNT unit 3

`PCNT_UNIT_4` = 4
PCNT unit 4

`PCNT_UNIT_5` = 5
PCNT unit 5

`PCNT_UNIT_6` = 6
PCNT unit 6

`PCNT_UNIT_7` = 7
PCNT unit 7

`PCNT_UNIT_MAX`

enum pcnt_channel_t
Selection of channels available for a single PCNT unit.

Values:

`PCNT_CHANNEL_0` = 0x00
PCNT channel 0

`PCNT_CHANNEL_1` = 0x01
PCNT channel 1

`PCNT_CHANNEL_MAX`

enum pcnt_evt_type_t
Selection of counter’ s events the may trigger an interrupt.

Values:

`PCNT_EVT_L_LIM` = 0
PCNT watch point event: Minimum counter value

`PCNT_EVT_H_LIM` = 1
PCNT watch point event: Maximum counter value

`PCNT_EVT_THRES_0` = 2
PCNT watch point event: threshold0 value event

`PCNT_EVT_THRES_1` = 3
: PCNT watch point event: threshold1 value event

`PCNT_EVT_ZERO` = 4
: PCNT watch point event: counter value zero event

`PCNT_EVT_MAX`

3.3.10 RMT

The RMT (Remote Control) module driver can be used to send and receive infrared remote control signals. Due to flexibility of RMT module, the driver can also be used to generate or receive many other types of signals.

The signal, which consists of a series of pulses, is generated by RMT' s transmitter based on a list of values. The values define the pulse duration and a binary level, see below. The transmitter can also provide a carrier and modulate it with provided pulses.

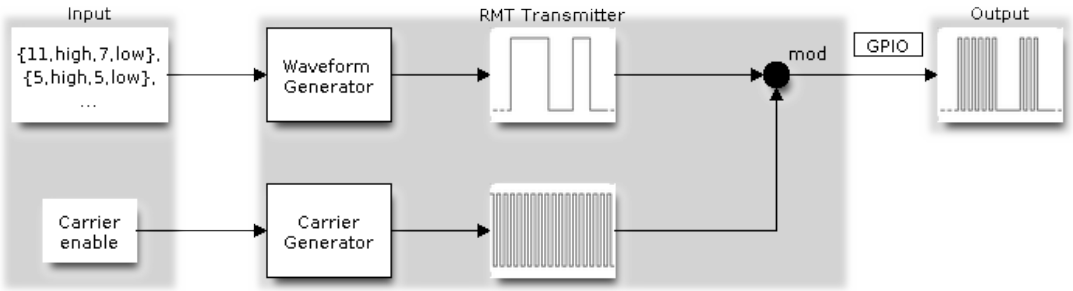

图 19: RMT Transmitter Overview

The reverse operation is performed by the receiver, where a series of pulses is decoded into a list of values containing the pulse duration and binary level. A filter may be applied to remove high frequency noise from the input signal.

There couple of typical steps to setup and operate the RMT and they are discussed in the following sections:

1. *Configure Driver*
2. *Transmit Data* or *Receive Data*
3. *Change Operation Parameters*
4. *Use Interrupts*

The RMT has eight channels numbered from zero to seven. Each channel is able to independently transmit or receive data. They are referred to using indexes defined in structure *`rmt_channel_t`*.

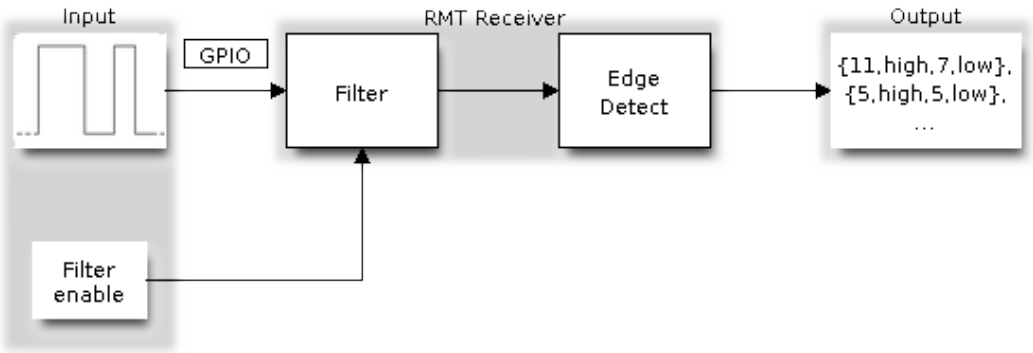

图 20: RMT Receiver Overview

Configure Driver

There are several parameters that define how particular channel operates. Most of these parameters are configured by setting specific members of *rmt_config_t* structure. Some of the parameters are common to both transmit or receive mode, and some are mode specific. They are all discussed below.

Common Parameters

- The **channel** to be configured, select one from the *rmt_channel_t* enumerator.
- The RMT **operation mode** - whether this channel is used to transmit or receive data, selected by setting a **rmt_mode** members to one of the values from *rmt_mode_t*.
- What is the **pin number** to transmit or receive RMT signals, selected by setting **gpio_num**.
- How many **memory blocks** will be used by the channel, set with **mem_block_num**.
- A **clock divider**, that will determine the range of pulse length generated by the RMT transmitter or discriminated by the receiver. Selected by setting **clk_div** to a value within [1 .. 255] range. The RMT source clock is typically APB CLK, 80Mhz by default.

注解: The period of a square wave after the clock divider is called a 'tick'. The length of the pulses generated by the RMT transmitter or discriminated by the receiver is configured in number of 'ticks'.

There are also couple of specific parameters that should be set up depending if selected channel is configured in *Transmit Mode* or *Receive Mode*:

Transmit Mode

When configuring channel in transmit mode, set **tx_config** and the following members of *rmt_tx_config_t*:

- Transmit the currently configured data items in a loop - **loop_en**
- Enable the RMT carrier signal - **carrier_en**
- Frequency of the carrier in Hz - **carrier_freq_hz**
- Duty cycle of the carrier signal in percent (%) - **carrier_duty_percent**
- Level of the RMT output, when the carrier is applied - **carrier_level**
- Enable the RMT output if idle - **idle_output_en**
- Set the signal level on the RMT output if idle - **idle_level**

Receive Mode

In receive mode, set **rx_config** and the following members of *rmt_rx_config_t*:

- Enable a filter on the input of the RMT receiver - **filter_en**
- A threshold of the filter, set in the number of ticks - **filter_ticks_thresh**. Pulses shorter than this setting will be filtered out. Note, that the range of entered tick values is [0..255].
- A pulse length threshold that will turn the RMT receiver idle, set in number of ticks - **idle_threshold**. The receiver will ignore pulses longer than this setting.

Finalize Configuration

Once the *rmt_config_t* structure is populated with parameters, it should be then invoked with *rmt_config()* to make the configuration effective.

The last configuration step is installation of the driver in memory by calling *rmt_driver_install()*. If `rx_buf_size` parameter of this function is > 0, then a ring buffer for incoming data will be allocated. A default ISR handler will be installed, see a note in *Use Interrupts*.

Now, depending on how the channel is configured, we are ready to either *Transmit Data* or *Receive Data*. This is described in next two sections.

Transmit Data

Before being able to transmit some RMT pulses, we need to define the pulse pattern. The minimum pattern recognized by the RMT controller, later called an 'item', is provided in a structure `rmt_item32_t`, see soc/esp32/include/soc/rmt_struct.h. Each item consists of two pairs of two values. The first value in a pair

describes the signal duration in ticks and is 15 bits long, the second provides the signal level (high or low) and is contained in a single bit. A block of couple of items and the structure of an item is presented below.

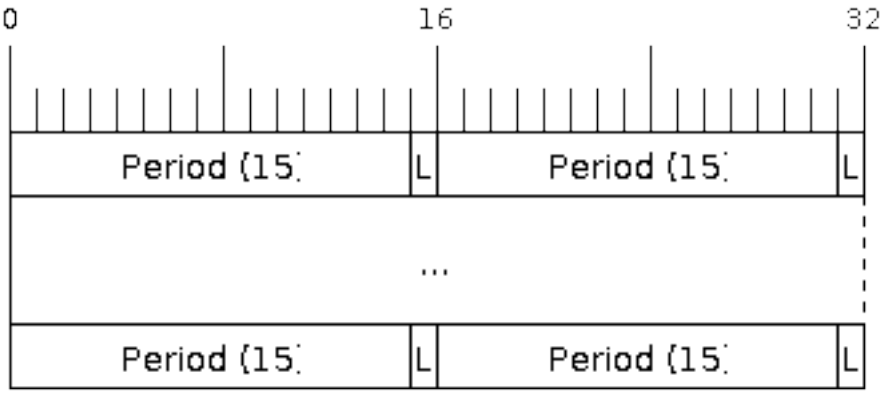

图 21: Structure of RMT items (L - signal level)

For a simple example how to define a block of items see peripherals/rmt_tx.

The items are provided to the RMT controller by calling function *rmt_write_items()*. This function also automatically triggers start of transmission. It may be called to wait for transmission completion or exit just after transmission start. In such case you can wait for the transmission end by calling *rmt_wait_tx_done()*. This function does not limit the number of data items to transmit. It is using an interrupt to successively copy the new data chunks to RMT's internal memory as previously provided data are sent out.

Another way to provide data for transmission is by calling *rmt_fill_tx_items()*. In this case transmission is not started automatically. To control the transmission process use *rmt_tx_start()* and *rmt_tx_stop()*. The number of items to sent is restricted by the size of memory blocks allocated in the RMT controller's internal memory, see *rmt_set_mem_block_num()*.

Receive Data

Before starting the receiver we need some storage for incoming items. The RMT controller has 512 x 32-bits of internal RAM shared between all eight channels. In typical scenarios it is not enough as an ultimate storage for all incoming (and outgoing) items. Therefore this API supports retrieval of incoming items on the fly to save them in a ring buffer of a size defined by the user. The size is provided when calling *rmt_driver_install()* discussed above. To get a handle to this buffer call *rmt_get_ringbuf_handle()*.

With the above steps complete we can start the receiver by calling *rmt_rx_start()* and then move to checking what's inside the buffer. To do so, you can use common FreeRTOS functions that interact with the ring buffer. Please see an example how to do it in peripherals/rmt_nec_tx_rx.

To stop the receiver, call *rmt_rx_stop()*.

Change Operation Parameters

Previously described function *rmt_config()* provides a convenient way to set several configuration parameters in one shot. This is usually done on application start. Then, when the application is running, the API provides an alternate way to update individual parameters by calling dedicated functions. Each function refers to the specific RMT channel provided as the first input parameter. Most of the functions have *_get_* counterpart to read back the currently configured value.

Parameters Common to Transmit and Receive Mode

- Selection of a GPIO pin number on the input or output of the RMT - *rmt_set_pin()*
- Number of memory blocks allocated for the incoming or outgoing data - *rmt_set_mem_pd()*
- Setting of the clock divider - *rmt_set_clk_div()*
- Selection of the clock source, note that currently one clock source is supported, the APB clock which is 80Mhz - *rmt_set_source_clk()*

Transmit Mode Parameters

- Enable or disable the loop back mode for the transmitter - *rmt_set_tx_loop_mode()*
- Binary level on the output to apply the carrier - *rmt_set_tx_carrier()*, selected from *rmt_carrier_level_t*
- Determines the binary level on the output when transmitter is idle - *rmt_set_idle_level()*, selected from *rmt_idle_level_t*

Receive Mode Parameters

- The filter setting - *rmt_set_rx_filter()*
- The receiver threshold setting - *rmt_set_rx_idle_thresh()*
- Whether the transmitter or receiver is entitled to access RMT' s memory - *rmt_set_memory_owner()*, selection is from *rmt_mem_owner_t*.

Use Interrupts

Registering of an interrupt handler for the RMT controller is done be calling *rmt_isr_register()*.

注解: When calling *rmt_driver_install()* to use the system RMT driver, a default ISR is being installed. In such a case you cannot register a generic ISR handler with *rmt_isr_register()*.

The RMT controller triggers interrupts on four specific events describes below. To enable interrupts on these events, the following functions are provided:

- The RMT receiver has finished receiving a signal - *rmt_set_rx_intr_en()*
- The RMT transmitter has finished transmitting the signal - *rmt_set_tx_intr_en()*
- The number of events the transmitter has sent matches a threshold value *rmt_set_tx_thr_intr_en()*
- Ownership to the RMT memory block has been violated - *rmt_set_err_intr_en()*

Setting or clearing an interrupt enable mask for specific channels and events may be also done by calling *rmt_set_intr_enable_mask()* or *rmt_clr_intr_enable_mask()*.

When servicing an interrupt within an ISR, the interrupt need to explicitly cleared. To do so, set specific bits described as `RMT.int_clr.val.chN_event_name` and defined as a `volatile struct` in soc/esp32/include/soc/rmt_struct.h, where N is the RMT channel number [0, 7] and the `event_name` is one of four events described above.

If you do not need an ISR anymore, you can deregister it by calling a function *rmt_isr_deregister()*.

Uninstall Driver

If the RMT driver has been installed with *rmt_driver_install()* for some specific period of time and then not required, the driver may be removed to free allocated resources by calling *rmt_driver_uninstall()*.

Application Examples

- A simple RMT TX example: peripherals/rmt_tx.
- NEC remote control TX and RX example: peripherals/rmt_nec_tx_rx.

API Reference

Header File

- driver/include/driver/rmt.h

Functions

esp_err_t **rmt_set_clk_div**(*rmt_channel_t channel*, uint8_t *div_cnt*)

Set RMT clock divider, channel clock is divided from source clock.

Return

- ESP_ERR_INVALID_ARG Parameter error
- ESP_OK Success

Parameters

- `channel`: RMT channel (0-7)
- `div_cnt`: RMT counter clock divider

esp_err_t **rmt_get_clk_div**(*rmt_channel_t channel*, uint8_t **div_cnt*)

Get RMT clock divider, channel clock is divided from source clock.

Return

- ESP_ERR_INVALID_ARG Parameter error
- ESP_OK Success

Parameters

- `channel`: RMT channel (0-7)
- `div_cnt`: pointer to accept RMT counter divider

esp_err_t **rmt_set_rx_idle_thresh**(*rmt_channel_t channel*, uint16_t *thresh*)

Set RMT RX idle threshold value.

In receive mode, when no edge is detected on the input signal for longer than idle_thres channel clock cycles, the receive process is finished.

Return

- ESP_ERR_INVALID_ARG Parameter error
- ESP_OK Success

Parameters

- `channel`: RMT channel (0-7)
- `thresh`: RMT RX idle threshold

esp_err_t **rmt_get_rx_idle_thresh**(*rmt_channel_t channel*, uint16_t **thresh*)

Get RMT idle threshold value.

In receive mode, when no edge is detected on the input signal for longer than idle_thres channel clock cycles, the receive process is finished.

Return

- ESP_ERR_INVALID_ARG Parameter error

- ESP_OK Success

Parameters

- `channel`: RMT channel (0-7)
- `thresh`: pointer to accept RMT RX idle threshold value

esp_err_t **rmt_set_mem_block_num**(*rmt_channel_t channel*, uint8_t *rmt_mem_num*)

Set RMT memory block number for RMT channel.

This function is used to configure the amount of memory blocks allocated to channel n The 8 channels share a 512x32-bit RAM block which can be read and written by the processor cores over the APB bus, as well as read by the transmitters and written by the receivers.

The RAM address range for channel n is start_addr_CHn to end_addr_CHn, which are defined by: Memory block start address is RMT_CHANNEL_MEM(n) (in soc/rmt_reg.h), that is, start_addr_chn = RMT base address + 0x800 + 64 ∗ 4 ∗ n, and end_addr_chn = RMT base address + 0x800 + 64 ∗ 4 ∗ n + 64 ∗ 4 ∗ RMT_MEM_SIZE_CHn mod 512 ∗ 4

Note If memory block number of one channel is set to a value greater than 1, this channel will occupy the memory block of the next channel. Channel 0 can use at most 8 blocks of memory, accordingly channel 7 can only use one memory block.

Return

- ESP_ERR_INVALID_ARG Parameter error
- ESP_OK Success

Parameters

- `channel`: RMT channel (0-7)
- `rmt_mem_num`: RMT RX memory block number, one block has 64 * 32 bits.

esp_err_t **rmt_get_mem_block_num**(*rmt_channel_t channel*, uint8_t **rmt_mem_num*)

Get RMT memory block number.

Return

- ESP_ERR_INVALID_ARG Parameter error
- ESP_OK Success

Parameters

- `channel`: RMT channel (0-7)
- `rmt_mem_num`: Pointer to accept RMT RX memory block number

esp_err_t **rmt_set_tx_carrier**(*rmt_channel_t channel*, bool *carrier_en*, uint16_t *high_level*, uint16_t *low_level*, *rmt_carrier_level_t carrier_level*)

Configure RMT carrier for TX signal.

Set different values for carrier_high and carrier_low to set different frequency of carrier. The unit of carrier_high/low is the source clock tick, not the divided channel counter clock.

Return

- ESP_ERR_INVALID_ARG Parameter error
- ESP_OK Success

Parameters

- `channel`: RMT channel (0-7)
- `carrier_en`: Whether to enable output carrier.
- `high_level`: High level duration of carrier
- `low_level`: Low level duration of carrier.
- `carrier_level`: Configure the way carrier wave is modulated for channel 0-7.
  - 1’ b1:transmit on low output level
  - 1’ b0:transmit on high output level

esp_err_t **rmt_set_mem_pd**(*rmt_channel_t channel*, bool *pd_en*)

Set RMT memory in low power mode.

Reduce power consumed by memory. 1:memory is in low power state.

Return

- ESP_ERR_INVALID_ARG Parameter error
- ESP_OK Success

Parameters

- `channel`: RMT channel (0-7)
- `pd_en`: RMT memory low power enable.

esp_err_t **rmt_get_mem_pd**(*rmt_channel_t channel*, bool **pd_en*)

Get RMT memory low power mode.

Return

- ESP_ERR_INVALID_ARG Parameter error
- ESP_OK Success

Parameters

- `channel`: RMT channel (0-7)
- `pd_en`: Pointer to accept RMT memory low power mode.

esp_err_t **rmt_tx_start**(*rmt_channel_t channel*, bool *tx_idx_rst*)

Set RMT start sending data from memory.

Return

- ESP_ERR_INVALID_ARG Parameter error
- ESP_OK Success

Parameters

- `channel`: RMT channel (0-7)
- `tx_idx_rst`: Set true to reset memory index for TX. Otherwise, transmitter will continue sending from the last index in memory.

esp_err_t **rmt_tx_stop**(*rmt_channel_t channel*)

Set RMT stop sending.

Return

- ESP_ERR_INVALID_ARG Parameter error
- ESP_OK Success

Parameters

- `channel`: RMT channel (0-7)

esp_err_t **rmt_rx_start**(*rmt_channel_t channel*, bool *rx_idx_rst*)

Set RMT start receiving data.

Return

- ESP_ERR_INVALID_ARG Parameter error
- ESP_OK Success

Parameters

- `channel`: RMT channel (0-7)
- `rx_idx_rst`: Set true to reset memory index for receiver. Otherwise, receiver will continue receiving data to the last index in memory.

esp_err_t **rmt_rx_stop**(*rmt_channel_t channel*)

Set RMT stop receiving data.

Return

- ESP_ERR_INVALID_ARG Parameter error
- ESP_OK Success

Parameters

- `channel`: RMT channel (0-7)

esp_err_t **rmt_memory_rw_rst**(*rmt_channel_t channel*)

Reset RMT TX/RX memory index.

Return

- ESP_ERR_INVALID_ARG Parameter error
- ESP_OK Success

Parameters

- `channel`: RMT channel (0-7)

esp_err_t **rmt_set_memory_owner**(*rmt_channel_t channel*, *rmt_mem_owner_t owner*)

Set RMT memory owner.

Return

- ESP_ERR_INVALID_ARG Parameter error
- ESP_OK Success

Parameters

- `channel`: RMT channel (0-7)
- `owner`: To set when the transmitter or receiver can process the memory of channel.

esp_err_t **rmt_get_memory_owner**(*rmt_channel_t channel*, *rmt_mem_owner_t* **owner*)

Get RMT memory owner.

Return

- ESP_ERR_INVALID_ARG Parameter error
- ESP_OK Success

Parameters

- `channel`: RMT channel (0-7)
- `owner`: Pointer to get memory owner.

esp_err_t **rmt_set_tx_loop_mode**(*rmt_channel_t channel*, bool *loop_en*)

Set RMT tx loop mode.

Return

- ESP_ERR_INVALID_ARG Parameter error
- ESP_OK Success

Parameters

- `channel`: RMT channel (0-7)
- `loop_en`: Enable RMT transmitter loop sending mode. If set true, transmitter will continue sending from the first data to the last data in channel 0-7 over and over again in a loop.

esp_err_t **rmt_get_tx_loop_mode**(*rmt_channel_t channel*, bool **loop_en*)

Get RMT tx loop mode.

Return

- ESP_ERR_INVALID_ARG Parameter error
- ESP_OK Success

Parameters

- `channel`: RMT channel (0-7)
- `loop_en`: Pointer to accept RMT transmitter loop sending mode.

esp_err_t **rmt_set_rx_filter**(*rmt_channel_t channel*, bool *rx_filter_en*, uint8_t *thresh*)

Set RMT RX filter.

In receive mode, channel 0-7 will ignore input pulse when the pulse width is smaller than threshold. Counted in source clock, not divided counter clock.

Return

- ESP_ERR_INVALID_ARG Parameter error
- ESP_OK Success

Parameters

- `channel`: RMT channel (0-7)
- `rx_filter_en`: To enable RMT receiver filter.
- `thresh`: Threshold of pulse width for receiver.

esp_err_t **rmt_set_source_clk**(*rmt_channel_t channel*, *rmt_source_clk_t base_clk*)

Set RMT source clock.

RMT module has two clock sources:

1. APB clock which is 80Mhz
2. REF tick clock, which would be 1Mhz (not supported in this version).

Return

- ESP_ERR_INVALID_ARG Parameter error
- ESP_OK Success

Parameters

- `channel`: RMT channel (0-7)
- `base_clk`: To choose source clock for RMT module.

esp_err_t **rmt_get_source_clk**(*rmt_channel_t channel*, *rmt_source_clk_t* **src_clk*)

Get RMT source clock.

RMT module has two clock sources:

1. APB clock which is 80Mhz
2. REF tick clock, which would be 1Mhz (not supported in this version).

Return

- ESP_ERR_INVALID_ARG Parameter error
- ESP_OK Success

Parameters

- `channel`: RMT channel (0-7)
- `src_clk`: Pointer to accept source clock for RMT module.

esp_err_t **rmt_set_idle_level**(*rmt_channel_t channel*, bool *idle_out_en*, *rmt_idle_level_t level*)

Set RMT idle output level for transmitter.

Return

- ESP_ERR_INVALID_ARG Parameter error
- ESP_OK Success

Parameters

- `channel`: RMT channel (0-7)
- `idle_out_en`: To enable idle level output.
- `level`: To set the output signal’ s level for channel 0-7 in idle state.

esp_err_t **rmt_get_idle_level**(*rmt_channel_t channel*, bool **idle_out_en*, *rmt_idle_level_t *level*)

Get RMT idle output level for transmitter.

Return

- ESP_ERR_INVALID_ARG Parameter error
- ESP_OK Success

Parameters

- `channel`: RMT channel (0-7)
- `idle_out_en`: Pointer to accept value of enable idle.
- `level`: Pointer to accept value of output signal' s level in idle state for specified channel.

esp_err_t **rmt_get_status**(*rmt_channel_t channel*, uint32_t **status*)

Get RMT status.

Return

- ESP_ERR_INVALID_ARG Parameter error
- ESP_OK Success

Parameters

- `channel`: RMT channel (0-7)
- `status`: Pointer to accept channel status. Please refer to RMT_CHnSTATUS_REG(n=0~7) in `rmt_reg.h` for more details of each field.

void **rmt_set_intr_enable_mask**(uint32_t *mask*)

Set mask value to RMT interrupt enable register.

Parameters

- `mask`: Bit mask to set to the register

void **rmt_clr_intr_enable_mask**(uint32_t *mask*)

Clear mask value to RMT interrupt enable register.

Parameters

- `mask`: Bit mask to clear the register

esp_err_t **rmt_set_rx_intr_en**(*rmt_channel_t channel*, bool *en*)

Set RMT RX interrupt enable.

Return

- ESP_ERR_INVALID_ARG Parameter error
- ESP_OK Success

Parameters

- `channel`: RMT channel (0 - 7)
- `en`: enable or disable RX interrupt.

esp_err_t **rmt_set_err_intr_en**(*rmt_channel_t channel*, bool *en*)

Set RMT RX error interrupt enable.

Return

- ESP_ERR_INVALID_ARG Parameter error
- ESP_OK Success

Parameters

- `channel`: RMT channel (0 - 7)
- `en`: enable or disable RX err interrupt.

esp_err_t **rmt_set_tx_intr_en**(*rmt_channel_t channel*, bool *en*)

Set RMT TX interrupt enable.

Return

- ESP_ERR_INVALID_ARG Parameter error
- ESP_OK Success

Parameters

- `channel`: RMT channel (0 - 7)
- `en`: enable or disable TX interrupt.

esp_err_t **rmt_set_tx_thr_intr_en**(*rmt_channel_t channel*, bool *en*, uint16_t *evt_thresh*)

Set RMT TX threshold event interrupt enable.

An interrupt will be triggered when the number of transmitted items reaches the threshold value

Return

- ESP_ERR_INVALID_ARG Parameter error
- ESP_OK Success

Parameters

- `channel`: RMT channel (0 - 7)

- `en`: enable or disable TX event interrupt.
- `evt_thresh`: RMT event interrupt threshold value

esp_err_t **rmt_set_pin**(*rmt_channel_t channel*, *rmt_mode_t mode*, *gpio_num_t gpio_num*)

Set RMT pin.

Return

- ESP_ERR_INVALID_ARG Parameter error
- ESP_OK Success

Parameters

- `channel`: RMT channel (0 - 7)
- `mode`: TX or RX mode for RMT
- `gpio_num`: GPIO number to transmit or receive the signal.

esp_err_t **rmt_config**(**const** *rmt_config_t* **rmt_param*)

Configure RMT parameters.

Return

- ESP_ERR_INVALID_ARG Parameter error
- ESP_OK Success

Parameters

- `rmt_param`: RMT parameter struct

esp_err_t **rmt_isr_register**(void (**fn*))void *

, void **arg*, int *intr_alloc_flags*, *rmt_isr_handle_t* **handle*Register RMT interrupt handler, the handler is an ISR.

The handler will be attached to the same CPU core that this function is running on.

Note If you already called rmt_driver_install to use system RMT driver, please do not register ISR handler again.

Return

- ESP_OK Success
- ESP_ERR_INVALID_ARG Function pointer error.
- ESP_FAIL System driver installed, can not register ISR handler for RMT

Parameters

- `fn`: Interrupt handler function.

- `arg`: Parameter for the handler function
- `intr_alloc_flags`: Flags used to allocate the interrupt. One or multiple (ORred) ESP_INTR_FLAG_* values. See esp_intr_alloc.h for more info.
- `handle`: If non-zero, a handle to later clean up the ISR gets stored here.

esp_err_t **rmt_isr_deregister**(*rmt_isr_handle_t handle*)

Deregister previously registered RMT interrupt handler.

Return

- ESP_OK Success
- ESP_ERR_INVALID_ARG Handle invalid

Parameters

- `handle`: Handle obtained from rmt_isr_register

esp_err_t **rmt_fill_tx_items**(*rmt_channel_t channel*, `const` rmt_item32_t **item*, uint16_t *item_num*, uint16_t *mem_offset*)

Fill memory data of channel with given RMT items.

Return

- ESP_ERR_INVALID_ARG Parameter error
- ESP_OK Success

Parameters

- `channel`: RMT channel (0 - 7)
- `item`: Pointer of items.
- `item_num`: RMT sending items number.
- `mem_offset`: Index offset of memory.

esp_err_t **rmt_driver_install**(*rmt_channel_t channel*, size_t *rx_buf_size*, int *intr_alloc_flags*)

Initialize RMT driver.

Return

- ESP_ERR_INVALID_STATE Driver is already installed, call rmt_driver_uninstall first.
- ESP_ERR_NO_MEM Memory allocation failure
- ESP_ERR_INVALID_ARG Parameter error
- ESP_OK Success

Parameters

- `channel`: RMT channel (0 - 7)
- `rx_buf_size`: Size of RMT RX ringbuffer. Can be 0 if the RX ringbuffer is not used.
- `intr_alloc_flags`: Flags for the RMT driver interrupt handler. Pass 0 for default flags. See esp_intr_alloc.h for details. If ESP_INTR_FLAG_IRAM is used, please do not use the memory allocated from psram when calling rmt_write_items.

esp_err_t **rmt_driver_uninstall**(*rmt_channel_t channel*)

Uninstall RMT driver.

Return

- ESP_ERR_INVALID_ARG Parameter error
- ESP_OK Success

Parameters

- `channel`: RMT channel (0 - 7)

esp_err_t **rmt_get_channel_status**(*rmt_channel_status_result_t* **channel_status*)

Get the current status of eight channels.

Note Do not call this function if it is possible that `rmt_driver_uninstall` will be called at the same time.

Return

- ESP_ERR_INVALID_ARG Parameter is NULL
- ESP_OK Success

Parameters

- `channel_status`: store the current status of each channel

esp_err_t **rmt_write_items**(*rmt_channel_t channel*, **const** rmt_item32_t **rmt_item*, int *item_num*, bool *wait_tx_done*)

RMT send waveform from rmt_item array.

This API allows user to send waveform with any length.

Note This function will not copy data, instead, it will point to the original items, and send the waveform items. If wait_tx_done is set to true, this function will block and will not return until all items have been sent out. If wait_tx_done is set to false, this function will return immediately, and the driver interrupt will continue sending the items. We must make sure the item data will not be damaged when the driver is still sending items in driver interrupt.

Return

- ESP_ERR_INVALID_ARG Parameter error

- ESP_OK Success

Parameters

- `channel`: RMT channel (0 - 7)
- `rmt_item`: head point of RMT items array. If ESP_INTR_FLAG_IRAM is used, please do not use the memory allocated from psram when calling rmt_write_items.
- `item_num`: RMT data item number.
- `wait_tx_done`:
  - If set 1, it will block the task and wait for sending done.
  - If set 0, it will not wait and return immediately.

esp_err_t **rmt_wait_tx_done**(*rmt_channel_t channel*, TickType_t *wait_time*)

Wait RMT TX finished.

Return

- ESP_OK RMT Tx done successfully
- ESP_ERR_TIMEOUT Exceeded the 'wait_time' given
- ESP_ERR_INVALID_ARG Parameter error
- ESP_FAIL Driver not installed

Parameters

- `channel`: RMT channel (0 - 7)
- `wait_time`: Maximum time in ticks to wait for transmission to be complete. If set 0, return immediately with ESP_ERR_TIMEOUT if TX is busy (polling).

esp_err_t **rmt_get_ringbuf_handle**(*rmt_channel_t channel*, *RingbufHandle_t* **buf_handle*)

Get ringbuffer from RMT.

Users can get the RMT RX ringbuffer handle, and process the RX data.

Return

- ESP_ERR_INVALID_ARG Parameter error
- ESP_OK Success

Parameters

- `channel`: RMT channel (0 - 7)
- `buf_handle`: Pointer to buffer handle to accept RX ringbuffer handle.

esp_err_t **rmt_translator_init**(*rmt_channel_t channel*, *sample_to_rmt_t fn*)

Init rmt translator and register user callback. The callback will convert the raw data that needs to be sent to rmt format. If a channel is initialized more than once, tha user callback will be replaced by the later.

Return

- ESP_FAIL Init fail.
- ESP_OK Init success.

Parameters

- `channel`: RMT channel (0 - 7).
- `fn`: Point to the data conversion function.

esp_err_t **rmt_write_sample**(*rmt_channel_t channel*, **const** uint8_t **src*, size_t *src_size*, bool *wait_tx_done*)

Translate uint8_t type of data into rmt format and send it out. Requires rmt_translator_init to init the translator first.

Return

- ESP_FAIL Send fail
- ESP_OK Send success

Parameters

- `channel`: RMT channel (0 - 7).
- `src`: Pointer to the raw data.
- `src_size`: The size of the raw data.
- `wait_tx_done`: Set true to wait all data send done.

rmt_tx_end_callback_t **rmt_register_tx_end_callback**(*rmt_tx_end_fn_t function*, void **arg*)

Registers a callback that will be called when transmission ends.

Called by rmt_driver_isr_default in interrupt context.

Note Requires rmt_driver_install to install the default ISR handler.

Return the previous callback settings (members will be set to NULL if there was none)

Parameters

- `function`: Function to be called from the default interrupt handler or NULL.
- `arg`: Argument which will be provided to the callback when it is called.

Structures

struct rmt_channel_status_result_t

Data struct of RMT channel status.

Public Members

rmt_channel_status_t **status**[**RMT_CHANNEL_MAX**]

Store the current status of each channel

struct rmt_tx_config_t

Data struct of RMT TX configure parameters.

Public Members

bool **loop_en**

Enable sending RMT items in a loop

uint32_t **carrier_freq_hz**

RMT carrier frequency

uint8_t **carrier_duty_percent**

RMT carrier duty (%)

rmt_carrier_level_t **carrier_level**

Level of the RMT output, when the carrier is applied

bool **carrier_en**

RMT carrier enable

rmt_idle_level_t **idle_level**

RMT idle level

bool **idle_output_en**

RMT idle level output enable

struct rmt_rx_config_t

Data struct of RMT RX configure parameters.

Public Members

bool **filter_en**

RMT receiver filter enable

uint8_t **filter_ticks_thresh**

RMT filter tick number

uint16_t **idle_threshold**
RMT RX idle threshold

struct rmt_config_t
Data struct of RMT configure parameters.

Public Members

rmt_mode_t **rmt_mode**
RMT mode: transmitter or receiver

rmt_channel_t **channel**
RMT channel

uint8_t **clk_div**
RMT channel counter divider

gpio_num_t **gpio_num**
RMT GPIO number

uint8_t **mem_block_num**
RMT memory block number

rmt_tx_config_t **tx_config**
RMT TX parameter

rmt_rx_config_t **rx_config**
RMT RX parameter

struct rmt_tx_end_callback_t
Structure encapsulating a RMT TX end callback.

Public Members

rmt_tx_end_fn_t **function**
Function which is called on RMT TX end

void ***arg**
Optional argument passed to function

Macros

RMT_MEM_BLOCK_BYTE_NUM

RMT_MEM_ITEM_NUM

Type Definitions

typedef *intr_handle_t* **rmt_isr_handle_t**

typedef void (***rmt_tx_end_fn_t**)(*rmt_channel_t* channel, void *arg)

typedef void (***sample_to_rmt_t**)(**const** void *src, rmt_item32_t *dest, size_t src_size, size_t wanted_num, size_t *translated_size, size_t *item_num)

User callback function to convert uint8_t type data to rmt format(rmt_item32_t).

This function may be called from an ISR, so, the code should be short and efficient.

Note In fact, item_num should be a multiple of translated_size, e.g. : When we convert each byte of uint8_t type data to rmt format data, the relation between item_num and translated_size should be `item_num = translated_size*8`.

Parameters

- `src`: Pointer to the buffer storing the raw data that needs to be converted to rmt format.
- `dest`: Pointer to the buffer storing the rmt format data.
- `src_size`: The raw data size.
- `wanted_num`: The number of rmt format data that wanted to get.
- `translated_size`: The size of the raw data that has been converted to rmt format, it should return 0 if no data is converted in user callback.
- `item_num`: The number of the rmt format data that actually converted to, it can be less than wanted_num if there is not enough raw data, but cannot exceed wanted_num. it should return 0 if no data was converted.

Enumerations

enum rmt_channel_t

Values:

`RMT_CHANNEL_0` = 0
RMT Channel 0

`RMT_CHANNEL_1`
RMT Channel 1

`RMT_CHANNEL_2`
RMT Channel 2

`RMT_CHANNEL_3`
RMT Channel 3

RMT_CHANNEL_4
RMT Channel 4

RMT_CHANNEL_5
RMT Channel 5

RMT_CHANNEL_6
RMT Channel 6

RMT_CHANNEL_7
RMT Channel 7

RMT_CHANNEL_MAX

enum rmt_mem_owner_t
Values:

RMT_MEM_OWNER_TX = 0
RMT RX mode, RMT transmitter owns the memory block

RMT_MEM_OWNER_RX = 1
RMT RX mode, RMT receiver owns the memory block

RMT_MEM_OWNER_MAX

enum rmt_source_clk_t
Values:

RMT_BASECLK_REF = 0
RMT source clock system reference tick, 1MHz by default (not supported in this version)

RMT_BASECLK_APB
RMT source clock is APB CLK, 80Mhz by default

RMT_BASECLK_MAX

enum rmt_data_mode_t
Values:

RMT_DATA_MODE_FIFO = 0

RMT_DATA_MODE_MEM = 1

RMT_DATA_MODE_MAX

enum rmt_mode_t
Values:

RMT_MODE_TX = 0
RMT TX mode

RMT_MODE_RX
RMT RX mode

RMT_MODE_MAX

enum rmt_idle_level_t

Values:

RMT_IDLE_LEVEL_LOW = 0

RMT TX idle level: low Level

RMT_IDLE_LEVEL_HIGH

RMT TX idle level: high Level

RMT_IDLE_LEVEL_MAX

enum rmt_carrier_level_t

Values:

RMT_CARRIER_LEVEL_LOW = 0

RMT carrier wave is modulated for low Level output

RMT_CARRIER_LEVEL_HIGH

RMT carrier wave is modulated for high Level output

RMT_CARRIER_LEVEL_MAX

enum rmt_channel_status_t

Values:

RMT_CHANNEL_UNINIT = 0

RMT channel uninitialized

RMT_CHANNEL_IDLE = 1

RMT channel status idle

RMT_CHANNEL_BUSY = 2

RMT channel status busy

3.3.11 SDMMC Host Driver

Overview

On the ESP32, SDMMC host peripheral has two slots:

- Slot 0 (*SDMMC_HOST_SLOT_0*) is an 8-bit slot. It uses `HS1_*` signals in the PIN MUX.
- Slot 1 (*SDMMC_HOST_SLOT_1*) is a 4-bit slot. It uses `HS2_*` signals in the PIN MUX.

Pin mappings of these slots are given in the following table:

Signal	Slot 0	Slot 1
CMD	GPIO11	GPIO15
CLK	GPIO6	GPIO14
D0	GPIO7	GPIO2
D1	GPIO8	GPIO4
D2	GPIO9	GPIO12
D3	GPIO10	GPIO13
D4	GPIO16	
D5	GPIO17	
D6	GPIO5	
D7	GPIO18	
CD	any input via GPIO matrix	
WP	any input via GPIO matrix	

Card Detect and Write Protect signals can be routed to arbitrary pins using GPIO matrix. To use these pins, set `gpio_cd` and `gpio_wp` members of *sdmmc_slot_config_t* structure before calling *sdmmc_host_init_slot()*. Note that it is not advised to specify Card Detect pin when working with SDIO cards, because in ESP32 card detect signal can also trigger SDIO slave interrupt.

警告: Pins used by slot 0 (`HS1_*`) are also used to connect SPI flash chip in ESP-WROOM32 and ESP32-WROVER modules. These pins can not be shared between SD card and SPI flash. If you need to use Slot 0, connect SPI flash to different pins and set Efuses accordingly.

Supported speed modes

SDMMC Host driver supports the following speed modes:

- Default Speed (20MHz), 4-line/1-line (with SD cards), and 8-line (with 3.3V eMMC).
- High Speed (40MHz), 4-line/1-line (with SD cards), and 8-line (with 3.3V eMMC)
- High Speed DDR (40MHz), 4-line (with 3.3V eMMC)

Not supported at present are:

- High Speed DDR mode, 8-line eMMC
- UHS-I 1.8V modes, 4-line SD cards

Using the SDMMC Host driver

Of all the funtions listed below, only *sdmmc_host_init()*, *sdmmc_host_init_slot()*, and *sdmmc_host_deinit()* will be used directly by most applications.

Other functions, such as *sdmmc_host_set_bus_width()*, *sdmmc_host_set_card_clk()*, and *sdmmc_host_do_transaction()* will be called by the SD/MMC protocol layer via function pointers in *sdmmc_host_t* structure.

Configuring bus width and frequency

With the default initializers for *sdmmc_host_t* and *sdmmc_slot_config_t* (*SDMMC_HOST_DEFAULT* and *SDMMC_SLOT_CONFIG_DEFAULT*), SDMMC Host driver will attempt to use widest bus supported by the card (4 lines for SD, 8 lines for eMMC) and 20MHz frequency.

In designs where communication at 40MHz frequency can be achieved, it is possible to increase the bus frequency to by changing `max_freq_khz` field of *sdmmc_host_t*:

```
sdmmc_host_t host = SDMMC_HOST_DEFAULT();
host.max_freq_khz = SDMMC_FREQ_HIGHSPEED;
```

To configure bus width, set `width` field of *sdmmc_slot_config_t*. For example, to set 1-line mode:

```
sdmmc_slot_config_t slot = SDMMC_SLOT_CONFIG_DEFAULT();
slot.width = 1;
```

See also

See *SD/SDIO/MMC Driver* for the higher level driver which implements the protocol layer.

See *SD SPI Host Driver* for a similar driver which uses SPI controller and is limited to SPI mode of SD protocol.

See *SD Pullup Requirements* for pullup support and compatiblities about modules and devkits.

API Reference

Header File

- driver/include/driver/sdmmc_host.h

Functions

esp_err_t **sdmmc_host_init**()

Initialize SDMMC host peripheral.

Note This function is not thread safe

Return

- ESP_OK on success
- ESP_ERR_INVALID_STATE if sdmmc_host_init was already called
- ESP_ERR_NO_MEM if memory can not be allocated

esp_err_t **sdmmc_host_init_slot**(int *slot*, **const** *sdmmc_slot_config_t* **slot_config*)

Initialize given slot of SDMMC peripheral.

On the ESP32, SDMMC peripheral has two slots:

- Slot 0: 8-bit wide, maps to HS1_* signals in PIN MUX
- Slot 1: 4-bit wide, maps to HS2_* signals in PIN MUX

Card detect and write protect signals can be routed to arbitrary GPIOs using GPIO matrix.

Note This function is not thread safe

Return

- ESP_OK on success
- ESP_ERR_INVALID_STATE if host has not been initialized using sdmmc_host_init

Parameters

- `slot`: slot number (SDMMC_HOST_SLOT_0 or SDMMC_HOST_SLOT_1)
- `slot_config`: additional configuration for the slot

esp_err_t **sdmmc_host_set_bus_width**(int *slot*, size_t *width*)

Select bus width to be used for data transfer.

SD/MMC card must be initialized prior to this command, and a command to set bus width has to be sent to the card (e.g. SD_APP_SET_BUS_WIDTH)

Note This function is not thread safe

Return

- ESP_OK on success
- ESP_ERR_INVALID_ARG if slot number or width is not valid

Parameters

- `slot`: slot number (SDMMC_HOST_SLOT_0 or SDMMC_HOST_SLOT_1)
- `width`: bus width (1, 4, or 8 for slot 0; 1 or 4 for slot 1)

size_t **sdmmc_host_get_slot_width**(int *slot*)

Get bus width configured in `sdmmc_host_init_slot` to be used for data transfer.

Return configured bus width of the specified slot.

Parameters

- `slot`: slot number (SDMMC_HOST_SLOT_0 or SDMMC_HOST_SLOT_1)

esp_err_t **sdmmc_host_set_card_clk**(int *slot*, uint32_t *freq_khz*)

Set card clock frequency.

Currently only integer fractions of 40MHz clock can be used. For High Speed cards, 40MHz can be used. For Default Speed cards, 20MHz can be used.

Note This function is not thread safe

Return

- ESP_OK on success
- other error codes may be returned in the future

Parameters

- `slot`: slot number (SDMMC_HOST_SLOT_0 or SDMMC_HOST_SLOT_1)
- `freq_khz`: card clock frequency, in kHz

esp_err_t **sdmmc_host_set_bus_ddr_mode**(int *slot*, bool *ddr_enabled*)

Enable or disable DDR mode of SD interface.

Return

- ESP_OK on success
- ESP_ERR_NOT_SUPPORTED if DDR mode is not supported on this slot

Parameters

- `slot`: slot number (SDMMC_HOST_SLOT_0 or SDMMC_HOST_SLOT_1)
- `ddr_enabled`: enable or disable DDR mode

esp_err_t **sdmmc_host_do_transaction**(int *slot*, *sdmmc_command_t* **cmdinfo*)

Send command to the card and get response.

This function returns when command is sent and response is received, or data is transferred, or timeout occurs.

Note This function is not thread safe w.r.t. init/deinit functions, and bus width/clock speed configuration functions. Multiple tasks can call sdmmc_host_do_transaction as long as other sdmmc_host_* functions are not called.

Attention Data buffer passed in cmdinfo->data must be in DMA capable memory

Return

- ESP_OK on success
- ESP_ERR_TIMEOUT if response or data transfer has timed out
- ESP_ERR_INVALID_CRC if response or data transfer CRC check has failed
- ESP_ERR_INVALID_RESPONSE if the card has sent an invalid response
- ESP_ERR_INVALID_SIZE if the size of data transfer is not valid in SD protocol
- ESP_ERR_INVALID_ARG if the data buffer is not in DMA capable memory

Parameters

- `slot`: slot number (SDMMC_HOST_SLOT_0 or SDMMC_HOST_SLOT_1)
- `cmdinfo`: pointer to structure describing command and data to transfer

esp_err_t **sdmmc_host_io_int_enable**(int *slot*)

Enable IO interrupts.

This function configures the host to accept SDIO interrupts.

Return returns ESP_OK, other errors possible in the future

Parameters

- `slot`: slot number (SDMMC_HOST_SLOT_0 or SDMMC_HOST_SLOT_1)

esp_err_t **sdmmc_host_io_int_wait**(int *slot*, TickType_t *timeout_ticks*)

Block until an SDIO interrupt is received, or timeout occurs.

Return

- ESP_OK on success (interrupt received)
- ESP_ERR_TIMEOUT if the interrupt did not occur within timeout_ticks

Parameters

- `slot`: slot number (SDMMC_HOST_SLOT_0 or SDMMC_HOST_SLOT_1)
- `timeout_ticks`: number of RTOS ticks to wait for the interrupt

esp_err_t **sdmmc_host_deinit**()

Disable SDMMC host and release allocated resources.

Note This function is not thread safe

Return

- ESP_OK on success
- ESP_ERR_INVALID_STATE if sdmmc_host_init function has not been called

esp_err_t **sdmmc_host_pullup_en**(int *slot*, int *width*)

Enable the pull-ups of sd pins.

Note You should always place actual pullups on the lines instead of using this function. Internal pullup resistance are high and not sufficient, may cause instability in products. This is for debug or examples only.

Return

- ESP_OK: if success
- ESP_ERR_INVALID_ARG: if configured width larger than maximum the slot can support

Parameters

- `slot`: Slot to use, normally set it to 1.
- `width`: Bit width of your configuration, 1 or 4.

Structures

struct sdmmc_slot_config_t

Extra configuration for SDMMC peripheral slot

Public Members

gpio_num_t **gpio_cd**

GPIO number of card detect signal.

gpio_num_t **gpio_wp**

GPIO number of write protect signal.

uint8_t **width**

Bus width used by the slot (might be less than the max width supported)

uint32_t **flags**

Features used by this slot.

Macros

SDMMC_HOST_SLOT_0

SDMMC slot 0.

SDMMC_HOST_SLOT_1

SDMMC slot 1.

SDMMC_HOST_DEFAULT()

Default *sdmmc_host_t* structure initializer for SDMMC peripheral.

Uses SDMMC peripheral, with 4-bit mode enabled, and max frequency set to 20MHz

`SDMMC_SLOT_FLAG_INTERNAL_PULLUP`
Enable internal pullups on enabled pins. The internal pullups are insufficient however, please make sure external pullups are connected on the bus. This is for debug / example purpose only.

`SDMMC_SLOT_NO_CD`
indicates that card detect line is not used

`SDMMC_SLOT_NO_WP`
indicates that write protect line is not used

`SDMMC_SLOT_WIDTH_DEFAULT`
use the default width for the slot (8 for slot 0, 4 for slot 1)

`SDMMC_SLOT_CONFIG_DEFAULT()`
Macro defining default configuration of SDMMC host slot

3.3.12 SD SPI Host Driver

Overview

SPI controllers accessible via spi_master driver (HSPI, VSPI) can be used to work with SD cards. The driver which provides this capability is called "SD SPI Host", due to its similarity with the *SDMMC Host* driver.

In SPI mode, SD driver has lower throughput than in 1-line SD mode. However SPI mode makes pin selection more flexible, as SPI peripheral can be connected to any ESP32 pins using GPIO Matrix. SD SPI driver uses software controlled CS signal. Currently SD SPI driver assumes that it can use the SPI controller exclusively, so applications which need to share SPI bus between SD cards and other peripherals need to make sure that SD card and other devices are not used at the same time from different tasks.

SD SPI driver is represented using an *sdmmc_host_t* structure initialized using *SDSPI_HOST_DEFAULT* macro. For slot initialization, *SDSPI_SLOT_CONFIG_DEFAULT* can be used to fill in default pin mapping, which is the same as the pin mapping in SD mode.

SD SPI driver APIs are very similar to *SDMMC host APIs*. As with the SDMMC host driver, only *sdspi_host_init()*, *sdspi_host_init_slot()*, and *sdspi_host_deinit()* functions are normally used by the applications. Other functions are called by the protocol level driver via function pointers in *sdmmc_host_t* structure.

See *SD/SDIO/MMC Driver* for the higher level driver which implements the protocol layer.

API Reference

Header File

- driver/include/driver/sdspi_host.h

Functions

esp_err_t **sdspi_host_init**()

Initialize SD SPI driver.

Note This function is not thread safe

Return

- ESP_OK on success
- other error codes may be returned in future versions

esp_err_t **sdspi_host_init_slot**(int *slot*, **const** *sdspi_slot_config_t* **slot_config*)

Initialize SD SPI driver for the specific SPI controller.

Note This function is not thread safe

Return

- ESP_OK on success
- ESP_ERR_INVALID_ARG if sdspi_init_slot has invalid arguments
- ESP_ERR_NO_MEM if memory can not be allocated
- other errors from the underlying spi_master and gpio drivers

Parameters

- `slot`: SPI controller to use (HSPI_HOST or VSPI_HOST)
- `slot_config`: pointer to slot configuration structure

esp_err_t **sdspi_host_do_transaction**(int *slot*, *sdmmc_command_t* **cmdinfo*)

Send command to the card and get response.

This function returns when command is sent and response is received, or data is transferred, or timeout occurs.

Note This function is not thread safe w.r.t. init/deinit functions, and bus width/clock speed configuration functions. Multiple tasks can call sdspi_host_do_transaction as long as other sdspi_host_* functions are not called.

Return

- ESP_OK on success

- ESP_ERR_TIMEOUT if response or data transfer has timed out
- ESP_ERR_INVALID_CRC if response or data transfer CRC check has failed
- ESP_ERR_INVALID_RESPONSE if the card has sent an invalid response

Parameters

- `slot`: SPI controller (HSPI_HOST or VSPI_HOST)
- `cmdinfo`: pointer to structure describing command and data to transfer

esp_err_t **sdspi_host_set_card_clk**(int *slot*, uint32_t *freq_khz*)

Set card clock frequency.

Currently only integer fractions of 40MHz clock can be used. For High Speed cards, 40MHz can be used. For Default Speed cards, 20MHz can be used.

Note This function is not thread safe

Return

- ESP_OK on success
- other error codes may be returned in the future

Parameters

- `slot`: SPI controller (HSPI_HOST or VSPI_HOST)
- `freq_khz`: card clock frequency, in kHz

esp_err_t **sdspi_host_deinit**()

Release resources allocated using sdspi_host_init.

Note This function is not thread safe

Return

- ESP_OK on success
- ESP_ERR_INVALID_STATE if sdspi_host_init function has not been called

Structures

struct sdspi_slot_config_t

Extra configuration for SPI host

Public Members

gpio_num_t **gpio_miso**
GPIO number of MISO signal.

gpio_num_t **gpio_mosi**
GPIO number of MOSI signal.

gpio_num_t **gpio_sck**
GPIO number of SCK signal.

gpio_num_t **gpio_cs**
GPIO number of CS signal.

gpio_num_t **gpio_cd**
GPIO number of card detect signal.

gpio_num_t **gpio_wp**
GPIO number of write protect signal.

int **dma_channel**
DMA channel to be used by SPI driver (1 or 2)

Macros

SDSPI_HOST_DEFAULT()
Default *sdmmc_host_t* structure initializer for SD over SPI driver.

Uses SPI mode and max frequency set to 20MHz

'slot' can be set to one of HSPI_HOST, VSPI_HOST.

SDSPI_SLOT_NO_CD
indicates that card detect line is not used

SDSPI_SLOT_NO_WP
indicates that write protect line is not used

SDSPI_SLOT_CONFIG_DEFAULT()
Macro defining default configuration of SPI host

3.3.13 SDIO Card Slave Driver

Overview

The ESP32 SDIO Card peripherals (Host, Slave) shares two sets of pins as below table. The first set is usually occupied by SPI0 bus which is responsible for the SPI flash holding the code to run. This means SDIO slave driver can only runs on the second set of pins while SDIO host is not using it.

Pin Name	Slot1	Slot2
	GPIO Number	
CLK	6	14
CMD	11	15
DAT0	7	2
DAT1	8	4
DAT2	9	12
DAT3	10	13

The SDIO slave can run under 3 modes: SPI, 1-bit SD and 4-bit SD modes, which is detected automatically by the hardware. According to the SDIO specification, CMD and DAT0-3 lines should be pulled up no matter in 1-bit, 4-bit or SPI mode. Then the host initialize the slave into SD mode by first sending CMD0 with DAT3 pin high, while initialize the slave into SPI mode by sending CMD0 with CS pin (the same pin as DAT3) low.

注解: CMD and DATA lines D0-D3 of the card should be pulled up by 50KOhm resistor even in 1-bit mode or SPI mode. Most official devkits don't meet the pullup requirements by default, and there are conflicts on strapping pins as well. Please refer to *SD Pullup Requirements* to see how to setup your system correctly.

SD Pullup Requirements

CMD and DATA lines D0-D3 of the slave should be pulled up by 50KOhm resistor even in 1-bit mode or SPI mode. The pullups of the slave cards should be connected even if they're not connected to the host.

The MTDI strapping pin is incompatible with DAT2 line pull-up by default when the code flash is 3.3V. See *MTDI strapping pin* below.

Pullup inside Official Modules

For Espressif official modules, different weak pullups / pulldowns are connected to CMD, and DATA pins as below. To use these modules, these pins are required to be pulled up by 50KOhm resistors, since internal weak pullups are insufficient.

GPIO	15	2	4	12	13
Name	CMD	DAT0	DAT1	DAT2	DAT3
At startup	WPU	WPD	WPD	PU for 1.8v flash; WPD for 3.3v flash	WPU
Strapping requirement		Low to download to flash		High for 1.8v flash; Low for 3.3v flash	

- WPU: Weak pullup
- WPD: Weak pulldown
- PU: Pullup inside the module

For Wrover modules, they use 1.8v flash, and have pullup on GPIO12 inside. For Wroom-32 Series, PICO-D4 modules, they use 3.3v flash, and is weakly pulled down internally. See *MTDI strapping pin* below.

Pullup on Official Devkit (WroverKit)

For official Wrover Kit (till version 3), some of the pullups are provided on the board as the table below. For other devkits that don't have pullups, please connect them yourselves.

GPIO	15	2	4	12	13
Name	CMD	DAT0	DAT1	DAT2	DAT3
Pullup on the Kit	PU	PU	PU		PU & PD

- PU: Pullup
- PD: Pulldown

The DAT3 pullup conflicts with JTAG pulldown in WroverKit v3 and earlier, please either:

1. pull it up by resistor less than 5KOhm (2kOhm suggested) in 4-bit mode.
2. pull it up or drive it high by host or VDD3.3V in 1-bit mode.

MTDI strapping pin

MTDI (GPIO12) is used as a bootstrapping pin to select output voltage of an internal regulator which powers the flash chip (VDD_SDIO). This pin has an internal pulldown so if left unconnected it will read low at reset (selecting default 3.3V operation). When adding a pullup to this pin for SD card operation, consider the following:

- For boards which don't use the internal regulator (VDD_SDIO) to power the flash, GPIO12 can be pulled high.
- For boards which use 1.8V flash chip, GPIO12 needs to be pulled high at reset. This is fully compatible with SD card operation.
- On boards which use the internal regulator and a 3.3V flash chip, GPIO12 must be low at reset. This is incompatible with SD card operation. Please check the table below to see whether your modules/kits use 3.3v flash.

Module	Flash voltage	DAT2 connections
PICO-D4	3.3V	Internal PD, change EFUSE and pullup or disable DAT2 line*
Wroom-32 Series		
Wrover	1.8V	Internal PU, pullup suggested

Official devkits of different types and version mount different types of modules, please refer to the table below to see whether your devkit can support SDIO slave without steps above.

Devkit	Module	Flash voltage
PICO Kit	PICO-D4	3.3V (see steps below)
DevKitC	Wroom-32 Series	
WroverKit v2 and earlier		
WroverKit v3	Wrover	1.8V

If your board requires internal regulator with 3.3v output, to make it compatible with SD pullup, you can either:

- **In the case using ESP32 host only**, external pullup can be omitted and an internal pullup can be enabled using a `gpio_pullup_en(GPIO_NUM_12);` call. Most SD cards work fine when an internal pullup on GPIO12 line is enabled. Note that if ESP32 experiences a power-on reset while the SD card is sending data, high level on GPIO12 can be latched into the bootstrapping register, and ESP32 will enter a boot loop until external reset with correct GPIO12 level is applied.
- **In the case using ESP32 slave in 1-bit mode**, speicfy `SDIO_SLAVE_FLAG_DAT2_DISABLED` in the slave to avoid slave detecting on DAT2 line. Note the host will not know 4-bit mode is not supported any more by the standard CCCR register. You have to tell the host use 1-bit only.
- **For ESP32 host or slave**, another option is to burn the flash voltage selection efuses. This will permanently select 3.3V output voltage for the internal regulator, and GPIO12 will not be used as a bootstrapping pin. Then it is safe to connect a pullup resistor to GPIO12. This option is suggested for production use. NOTE this cannot be reverted once the EFUSE is burnt.

  The following command can be used to program flash voltage selection efuses **to 3.3V**:

  components/esptool_py/esptool/espefuse.py set_flash_voltage 3.3V

  This command will burn the *XPD_SDIO_TIEH*, *XPD_SDIO_FORCE*, and *XPD_SDIO_REG* efuses. With all three burned to value 1, the internal VDD_SDIO flash voltage regulator is permanently enabled at 3.3V. See the technical reference manual for more details.

  espefuse.py has a *–do-not-confirm* option if running from an automated flashing script.

GPIO2 Strapping pin

GPIO2 pin is used as a bootstrapping pin, and should be low to enter UART download mode. You may find it unable to enter the UART download mode if you correctly connect the pullup of SD on GPIO2. For WroverKit v3, there are dedicated circuits to pulldown the GPIO2 when downloading. For other boards, one way to do this is to connect GPIO0 and GPIO2 using a jumper, and then the auto-reset circuit on most development boards will pull GPIO2 low along with GPIO0, when entering download mode.

- Some boards have pulldown and/or LED on GPIO2. LED is usually ok, but pulldown will interfere with D0 signals and must be removed. Check the schematic of your development board for anything connected to GPIO2.

After the initialization, the host can enable the 4-bit SD mode by writing CCCR register 0x07 by CMD52. All the bus detection process are handled by the slave peripheral.

The host has to communicate with the slave by an ESP-slave-specific protocol. The slave driver offers 3 services over Function 1 access by CMD52 and CMD53: (1) a sending FIFO and a receiving FIFO, (2) 52 8-bit R/W registers shared by host and slave, (3) 16 interrupt sources (8 from host to slave, and 8 from slave to host).

Terminology

The SDIO slave driver uses the following terms:

- Transfer: a transfer is always started by a command token from the host, and may contain a reply and several data blocks. ESP32 slave software is based on transfers.
- Sending: slave to host transfers.
- Receiving: host to slave transfers.

注解: Register names in ESP Rechnical Reference Manual are oriented from the point of view of the host, i.e. 'rx' registers refer to sending, while 'tx' registers refer to receiving. We're not using *tx* or *rx* in the driver to avoid ambiguities.

- FIFO: specific address in Function 1 that can be access by CMD53 to read/write large amount of data. The address is related to the length requested to read from/write to the slave in a single transfer: *requested length* = 0x1F800-address.
- Ownership: When the driver takes ownership of a buffer, it means the driver can randomly read/write the buffer (usually via DMA). The application should not read/write the buffer until the ownership is returned to the application. If the application reads from a buffer owned by a receiving driver, the data read can be random; if the application writes to a buffer owned by a sending driver, the data sent may be corrupted.

- Requested length: The length requested in one transfer determined by the FIFO address.
- Transfer length: The length requested in one transfer determined by the CMD53 byte/block count field.

注解: Requested length is different from the transfer length. ESP32 slave DMA base on the *requested length* rather than the *transfer length*. The *transfer length* should be no shorter than the *requested length*, and the rest part will be filled with 0 (sending) or discard (receiving).

- Receiving buffer size: The buffer size is pre-defined between the host and the slave before communication starts. Slave application has to set the buffer size during initialization by the `recv_buffer_size` member of `sdio_slave_config_t`.
- Interrupts: the esp32 slave support interrupts in two directions: from host to slave (called slave interrupts below) and from slave to host (called host interrupts below). See more in *Interrupts*.
- Registers: specific address in Function 1 access by CMD52 or CMD53.

Communication with ESP SDIO Slave

The host should initialize the ESP32 SDIO slave according to the standard SDIO initialization process (Sector 3.1.2 of SDIO Simplified Specification), which is described briefly in *ESP SDIO slave initialization*.

However, there' s an ESP32-specific upper-level communication protocol upon the CMD52/CMD53 to Func 1. Please refer to *ESP SDIO slave protocol*, or example peripherals/sdio when programming your host.

Communication with ESP SDIO Slave

ESP SDIO slave initialization

The host should initialize the ESP32 SDIO slave according to the standard SDIO initialization process (Sector 3.1.2 of SDIO Simplified Specification). In this specification and below, the SDIO slave is also called an (SD)IO card. All the initialization CMD52 and CMD53 are sent to Func 0 (CIA region). Here is an brief example on how to do this:

1. **SDIO reset** CMD52 (Write 0x6=0x8)
2. **SD reset** CMD0
3. **Check whether IO card (optional)** CMD8
4. **Send SDIO op cond and wait for card ready** CMD5 arg = 0x00000000

   CMD5 arg = 0x00ff8000 (according to the response above, poll until ready)

   Example: Arg of R4 after first CMD5 (arg=0x00000000) is 0xXXFFFF00.

Keep sending CMD5 with arg=0x00FFFF00 until the R4 shows card ready (arg bit 31=1).

5. **Set address** CMD3
6. **Select card** CMD7 (arg address according to CMD3 response)

   Example: Arg of R6 after CMD3 is 0x0001xxxx.

   Arg of CMD7 should be 0x00010000.
7. **Select 4-bit mode (optional)** CMD52 (Write 0x07=0x02)
8. **Enable func1** CMD52 (Write 0x02=0x02)
9. **Enable SDIO interrupt (required if interrupt line (DAT1) is used)** CMD52 (Write 0x04=0x03)
10. **Set Func0 blocksize (optional, default value is 512 (0x200))** CMD52/53 (Read 0x10~0x11)

    CMD52/53 (Write 0x10=0x00)

    CMD52/53 (Write 0x11=0x02)

    CMD52/53 (Read 0x10~0x11, read to check the final value)
11. **Set Func1 blocksize (optional, default value is 512 (0x200))** CMD52/53 (Read 0x110~0x111)

    CMD52/53 (Write 0x110=0x00)

    CMD52/53 (Write 0x111=0x02)

    CMD52/53 (Read 0x110~0x111, read to check the final value)

ESP SDIO slave protocol

The protocol is based on Function 1 access by CMD52 and CMD53, offering 3 services: (1) sending and receiving FIFO, (2) 52 8-bit R/W register shared by host and slave, (3) 8 general purpose interrupt sources from host to slave and 8 in the oppsite direction.

The host should access the registers below as described to communicate with slave.

Slave register table

32-bit

- 0x044 (TOKEN_RDATA): in which bit 27-16 holds the receiving buffer number.
- 0x058 (INT_ST): holds the interrupt source bits from slave to host.
- 0x060 (PKT_LEN): holds the accumulated length (by byte) to be sent from slave to host.
- 0x0D4 (INT_CLR): write 1 to clear interrupt bits corresponding to INT_ST.

- 0x0DC (INT_ENA): mask bits for interrupts from slave to host.

8-bit

Shared general purpose registers:

- 0x06C-0x077: R/W registers 0-11 shared by slave and host.
- 0x07A-0x07B: R/W registers 14-15 shared by slave and host.
- 0x07E-0x07F: R/W registers 18-19 shared by slave and host.
- 0x088-0x08B: R/W registers 24-27 shared by slave and host.
- 0x09C-0x0BB: R/W registers 32-63 shared by slave and host.

Interrupt Registers: - 0x08D (SLAVE_INT): bits for host to interrupt slave. auto clear.

FIFO (sending and receiving)

0x090 - 0x1F7FF are reserved for FIFOs.

The address of CMD53 is related to the length requested to read from/write to the slave in a single transfer:

requested length = 0x1F800-address

The slave will respond with the length according to the length field in CMD53, with the data longer than *requested length* filled with 0 (sending) or discard (receiving).

注解: This includes both the block and the byte mode of CMD53.

The function number should be set to 1, OP Code should be set to 1 (for CMD53).

It is allowed to use CMD53 mode combination of block+byte to get higher effeciency when accessing the FIFO by arbitrary length. E.g. The block size is set to 512 by default, you can write/get 1031 bytes of data to/from the FIFO by:

1. Send CMD53 in block mode, block count=2 (1024 bytes) to address 0x1F3F9=0x1F800-**1031**.
2. Then send CMD53 in byte mode, byte count=8 (or 7 if your controller supports that) to address 0x1F7F9=0x1F800-**7**.

Interrupts

For the host interrupts, the slave raise the interrupt by pulling DAT1 line down at a proper time (level sensitive). The host detect this and read the INT_ST register to see the source. Then the host can clear it by writing the INT_CLR register and do something with the interrupt. The host can also mask unneeded

sources by clearing the bits in INT_ENA register corresponding to the sources. If all the sources are cleared (or masked), the DAT1 line goes inactive.

`sdio_slave_hostint_t` (*SDIO Card Slave Driver*) shows the bit definition corresponding to host interrupt sources.

For the slave interrupts, the host send transfers to write the SLAVE_INT register. Once a bit is written from 0 to 1, the slave hardware and driver will detect it and inform the app.

Receiving FIFO

To write the receiving FIFO in the slave, host should work in the following steps:

1. Read the TOKEN1 field (bits 27-16) of TOKEN_RDATA (0x044) register. The buffer number remaining is TOKEN1 minus the number of buffers used by host.
2. Make sure the buffer number is sufficient (*buffer_size* * *buffer_num* is greater than data to write, *buffer_size* is pre-defined between the host and the slave before the communication starts). Or go back to step 1 until the buffer is enough.
3. Write to the FIFO address with CMD53. Note that the *requested length* should not be larger than calculated in step 2, and the FIFO address is related to *rquested length*.
4. Calculate used buffers, note that non-full buffer at the tail should be seen as one that is used.

Sending FIFO

To read the sending FIFO in the slave, host should work in the following steps:

1. Wait for the interrupt line to be active (optional, low by default).
2. Read (poll) the interrupt bits in INT_ST register to see whether new packets exists.
3. If new packets are ready, reads the PKT_LEN reg. The data length to read from slave is PKT_LEN minuses the length that has been read from the host. If the PKT_LEN is not larger than used, wait and poll until the slave is ready and update the PKT_LEN.
4. Read from the FIFO with CMD53. Note that the *requested length* should not be larger than calculated in step3, and the FIFO address is related to *requested length*.
5. Recored read length.

Interrupts

There are interrupts from host to slave, and from slave to host to help communicating conveniently.

Slave Interrupts

The host can interrupt the slave by writing any one bit in the register 0x08D. Once any bit of the register is set, an interrupt is raised and the SDIO slave driver calls the callback function defined in the `slave_intr_cb` member in the `sdio_slave_config_t` structure.

注解: The callback function is called in the ISR, do not use any delay, loop or spinlock in the callback.

There' s another set of functions can be used. You can call `sdio_slave_wait_int` to wait for an interrupt within a certain time, or call `sdio_slave_clear_int` to clear interrupts from host. The callback function can work with the wait functions perfectly.

Host Interrupts

The slave can interrupt the host by an interrupt line (at certain time) which is level sensitive. When the host see the interrupt line pulled down, it may read the slave interrupt status register, to see the interrupt source. Host can clear interrupt bits, or choose to disable a interrupt source. The interrupt line will hold active until all the sources are cleared or disabled.

There are several dedicated interrupt sources as well as general purpose sources. see `sdio_slave_hostint_t` for more information.

Shared Registers

There are 52 8-bit R/W shared registers to share information between host and slave. The slave can write or read the registers at any time by `sdio_slave_read_reg` and `sdio_slave_write_reg`. The host can access (R/W) the register by CMD52 or CMD53.

Receiving FIFO

When the host is going to send the slave some packets, it has to check whether the slave is ready to receive by reading the buffer number of slave.

To allow the host sending data to the slave, the application has to load buffers to the slave driver by the following steps:

1. Register the buffer by calling `sdio_slave_recv_register_buf`, and get the handle of the registered buffer. The driver will allocate memory for the linked-list descriptor needed to link the buffer onto the hardware.
2. Load buffers onto the driver by passing the buffer handle to `sdio_slave_recv_load_buf`.
3. Call `sdio_slave_recv` to get the received data. If non-blocking call is needed, set `wait=0`.

4. Pass the handle of processed buffer back to the driver by `sdio_recv_load_buf` again.

注解: To avoid overhead from copying data, the driver itself doesn't have any buffer inside, the application is responsible to offer new buffers in time. The DMA will automatically store received data to the buffer.

Sending FIFO

Each time the slave has data to send, it raises an interrupt and the host will request for the packet length. There are two sending modes:

- Stream Mode: when a buffer is loaded to the driver, the buffer length will be counted into the packet length requested by host in the incoming communications. Regardless previous packets are sent or not. This means the host can get data of several buffers in one transfer.
- Packet Mode: the packet length is updated packet by packet, and only when previous packet is sent. This means that the host can only get data of one buffer in one transfer.

注解: To avoid overhead from copying data, the driver itself doesn't have any buffer inside. Namely, the DMA takes data directly from the buffer provided by the application. The application should not touch the buffer until the sending is finished.

The sending mode can be set in the `sending_mode` member of `sdio_slave_config_t`, and the buffer numbers can be set in the `send_queue_size`. All the buffers are restricted to be no larger than 4092 bytes. Though in the stream mode several buffers can be sent in one transfer, each buffer is still counted as one in the queue.

The application can call `sdio_slave_transmit` to send packets. In this case the function returns when the transfer is successfully done, so the queue is not fully used. When higher effeciency is required, the application can use the following functions instead:

1. Pass buffer information (address, length, as well as an `arg` indicating the buffer) to `sdio_slave_send_queue`. If non-blocking call is needed, set `wait=0`. If the `wait` is not `portMAX_DELAY` (wait until success), application has to check the result to know whether the data is put in to the queue or discard.
2. Call `sdio_slave_send_get_finished` to get and deal with a finished transfer. A buffer should be keep unmodified until returned from `sdio_slave_send_get_finished`. This means the buffer is actually sent to the host, rather than just staying in the queue.

There are several ways to use the `arg` in the queue parameter:

1. Directly point `arg` to a dynamic-allocated buffer, and use the `arg` to free it when transfer finished.
2. Wrap transfer informations in a transfer structure, and point `arg` to the structure. You can use the structure to do more things like:

```
typedef struct {
    uint8_t* buffer;
    size_t   size;
    int      id;
}sdio_transfer_t;

//and send as:
sdio_transfer_t trans = {
    .buffer = ADDRESS_TO_SEND,
    .size = 8,
    .id = 3,  //the 3rd transfer so far
};
sdio_slave_send_queue(trans.buffer, trans.size, &trans, portMAX_DELAY);

//... maybe more transfers are sent here

//and deal with finished transfer as:
sdio_transfer_t* arg = NULL;
sdio_slave_send_get_finished((void**)&arg, portMAX_DELAY);
ESP_LOGI("tag", "(%d) successfully send %d bytes of %p", arg->id, arg->size, arg->
↪buffer);
some_post_callback(arg); //do more things
```

3. Working with the receiving part of this driver, point `arg` to the receive buffer handle of this buffer. So that we can directly use the buffer to receive data when it' s sent:

```
uint8_t buffer[256]={1,2,3,4,5,6,7,8};
sdio_slave_buf_handle_t handle = sdio_slave_recv_register_buf(buffer);
sdio_slave_send_queue(buffer, 8, handle, portMAX_DELAY);

//... maybe more transfers are sent here

//and load finished buffer to receive as
sdio_slave_buf_handle_t handle = NULL;
sdio_slave_send_get_finished((void**)&handle, portMAX_DELAY);
sdio_slave_recv_load_buf(handle);
```

More about this, see peripherals/sdio.

Application Example

Slave/master communication: peripherals/sdio.

API Reference

Header File

- driver/include/driver/sdio_slave.h

Functions

esp_err_t **sdio_slave_initialize**(*sdio_slave_config_t* **config*)

Initialize the sdio slave driver

Return

- ESP_ERR_NOT_FOUND if no free interrupt found.
- ESP_ERR_INVALID_STATE if already initialized.
- ESP_ERR_NO_MEM if fail due to memory allocation failed.
- ESP_OK if success

Parameters

- `config`: Configuration of the sdio slave driver.

void **sdio_slave_deinit**()

De-initialize the sdio slave driver to release the resources.

esp_err_t **sdio_slave_start**()

Start hardware for sending and receiving, as well as set the IOREADY1 to 1.

Note The driver will continue sending from previous data and PKT_LEN counting, keep data received as well as start receiving from current TOKEN1 counting. See `sdio_slave_reset`.

Return

- ESP_ERR_INVALID_STATE if already started.
- ESP_OK otherwise.

void **sdio_slave_stop**()

Stop hardware from sending and receiving, also set IOREADY1 to 0.

Note this will not clear the data already in the driver, and also not reset the PKT_LEN and TOKEN1 counting. Call `sdio_slave_reset` to do that.

esp_err_t **sdio_slave_reset**()

Clear the data still in the driver, as well as reset the PKT_LEN and TOKEN1 counting.

Return always return ESP_OK.

sdio_slave_buf_handle_t **sdio_slave_recv_register_buf**(uint8_t **start*)

Register buffer used for receiving. All buffers should be registered before used, and then can be used (again) in the driver by the handle returned.

Note The driver will use and only use the amount of space specified in the `recv_buffer_size` member set in the *sdio_slave_config_t*. All buffers should be larger than that. The buffer is used by the DMA, so it should be DMA capable and 32-bit aligned.

Return The buffer handle if success, otherwise NULL.

Parameters

- `start`: The start address of the buffer.

esp_err_t **sdio_slave_recv_unregister_buf**(*sdio_slave_buf_handle_t handle*)

Unregister buffer from driver, and free the space used by the descriptor pointing to the buffer.

Return ESP_OK if success, ESP_ERR_INVALID_ARG if the handle is NULL or the buffer is being used.

Parameters

- `handle`: Handle to the buffer to release.

esp_err_t **sdio_slave_recv_load_buf**(*sdio_slave_buf_handle_t handle*)

Load buffer to the queue waiting to receive data. The driver takes ownership of the buffer until the buffer is returned by `sdio_slave_send_get_finished` after the transaction is finished.

Return

- ESP_ERR_INVALID_ARG if invalid handle or the buffer is already in the queue. Only after the buffer is returened by `sdio_slave_recv` can you load it again.
- ESP_OK if success

Parameters

- `handle`: Handle to the buffer ready to receive data.

esp_err_t **sdio_slave_recv**(*sdio_slave_buf_handle_t* **handle_ret*, uint8_t ***out_addr*, size_t **out_len*, TickType_t *wait*)

Get received data if exist. The driver returns the ownership of the buffer to the app.

Note Call `sdio_slave_load_buf` with the handle to re-load the buffer onto the link list, and receive with the same buffer again. The address and length of the buffer got here is the same as got from `sdio_slave_get_buffer`.

Return

- ESP_ERR_INVALID_ARG if handle_ret is NULL
- ESP_ERR_TIMEOUT if timeout before receiving new data
- ESP_OK if success

Parameters

- `handle_ret`: Handle to the buffer holding received data. Use this handle in `sdio_slave_recv_load_buf` to receive in the same buffer again.
- `out_addr`: Output of the start address, set to NULL if not needed.
- `out_len`: Actual length of the data in the buffer, set to NULL if not needed.
- `wait`: Time to wait before data received.

uint8_t ***sdio_slave_recv_get_buf**(*sdio_slave_buf_handle_t handle*, size_t **len_o*)

Retrieve the buffer corresponding to a handle.

Return buffer address if success, otherwise NULL.

Parameters

- `handle`: Handle to get the buffer.
- `len_o`: Output of buffer length

esp_err_t **sdio_slave_send_queue**(uint8_t **addr*, size_t *len*, void **arg*, TickType_t *wait*)

Put a new sending transfer into the send queue. The driver takes ownership of the buffer until the buffer is returned by `sdio_slave_send_get_finished` after the transaction is finished.

Return

- ESP_ERR_INVALID_ARG if the length is not greater than 0.
- ESP_ERR_TIMEOUT if the queue is still full until timeout.
- ESP_OK if success.

Parameters

- `addr`: Address for data to be sent. The buffer should be DMA capable and 32-bit aligned.
- `len`: Length of the data, should not be longer than 4092 bytes (may support longer in the future).
- `arg`: Argument to returned in `sdio_slave_send_get_finished`. The argument can be used to indicate which transaction is done, or as a parameter for a callback. Set to NULL if not needed.
- `wait`: Time to wait if the buffer is full.

esp_err_t **sdio_slave_send_get_finished**(void **_out_arg_, TickType_t _wait_)

Return the ownership of a finished transaction.

Return ESP_ERR_TIMEOUT if no transaction finished, or ESP_OK if succeed.

Parameters

- `out_arg`: Argument of the finished transaction. Set to NULL if unused.
- `wait`: Time to wait if there' s no finished sending transaction.

esp_err_t **sdio_slave_transmit**(uint8_t *_addr_, size_t _len_)

Start a new sending transfer, and wait for it (blocked) to be finished.

Return

- ESP_ERR_INVALID_ARG if the length of descriptor is not greater than 0.
- ESP_ERR_TIMEOUT if the queue is full or host do not start a transfer before timeout.
- ESP_OK if success.

Parameters

- `addr`: Start address of the buffer to send
- `len`: Length of buffer to send.

uint8_t **sdio_slave_read_reg**(int _pos_)

Read the spi slave register shared with host.

Note register 28 to 31 are reserved for interrupt vector.

Return value of the register.

Parameters

- `pos`: register address, 0-27 or 32-63.

esp_err_t **sdio_slave_write_reg**(int _pos_, uint8_t _reg_)

Write the spi slave register shared with host.

Note register 29 and 31 are used for interrupt vector.

Return ESP_ERR_INVALID_ARG if address wrong, otherwise ESP_OK.

Parameters

- `pos`: register address, 0-11, 14-15, 18-19, 24-27 and 32-63, other address are reserved.
- `reg`: the value to write.

sdio_slave_hostint_t **sdio_slave_get_host_intena**()

Get the interrupt enable for host.

Return the interrupt mask.

void **sdio_slave_set_host_intena**(*sdio_slave_hostint_t* *ena*)

Set the interrupt enable for host.

Parameters

- `ena`: Enable mask for host interrupt.

esp_err_t **sdio_slave_send_host_int**(uint8_t *pos*)

Interrupt the host by general purpose interrupt.

Return

- ESP_ERR_INVALID_ARG if interrupt num error
- ESP_OK otherwise

Parameters

- `pos`: Interrupt num, 0-7.

void **sdio_slave_clear_host_int**(uint8_t *mask*)

Clear general purpose interrupt to host.

Parameters

- `mask`: Interrupt bits to clear, by bit mask.

esp_err_t **sdio_slave_wait_int**(int *pos*, TickType_t *wait*)

Wait for general purpose interrupt from host.

Note this clears the interrupt at the same time.

Return ESP_OK if success, ESP_ERR_TIMEOUT if timeout.

Parameters

- `pos`: Interrupt source number to wait for. is set.
- `wait`: Time to wait before interrupt triggered.

Structures

struct sdio_slave_config_t

Configuration of SDIO slave.

Public Members

sdio_slave_timing_t **timing**

timing of sdio_slave. see `sdio_slave_timing_t`.

sdio_slave_sending_mode_t **sending_mode**

mode of sdio_slave. `SDIO_SLAVE_MODE_STREAM` if the data needs to be sent as much as possible; `SDIO_SLAVE_MODE_PACKET` if the data should be sent in packets.

int **send_queue_size**

max buffers that can be queued before sending.

size_t **recv_buffer_size**

If buffer_size is too small, it costs more CPU time to handle larger number of buffers. If buffer_size is too large, the space larger than the transaction length is left blank but still counts a buffer, and the buffers are easily run out. Should be set according to length of data really transferred. All data that do not fully fill a buffer is still counted as one buffer. E.g. 10 bytes data costs 2 buffers if the size is 8 bytes per buffer. Buffer size of the slave pre-defined between host and slave before communication. All receive buffer given to the driver should be larger than this.

sdio_event_cb_t **event_cb**

when the host interrupts slave, this callback will be called with interrupt number (0-7).

uint32_t **flags**

Features to be enabled for the slave, combinations of `SDIO_SLAVE_FLAG_*`.

Macros

`SDIO_SLAVE_RECV_MAX_BUFFER`

`SDIO_SLAVE_FLAG_DAT2_DISABLED`

It is required by the SD specification that all 4 data lines should be used and pulled up even in 1-bit mode or SPI mode. However, as a feature, the user can specify this flag to make use of DAT2 pin in 1-bit mode. Note that the host cannot read CCCR registers to know we don't support 4-bit mode anymore, please do this at your own risk.

`SDIO_SLAVE_FLAG_HOST_INTR_DISABLED`

The DAT1 line is used as the interrupt line in SDIO protocol. However, as a feature, the user can specify this flag to make use of DAT1 pin of the slave in 1-bit mode. Note that the host has to do polling to the interrupt registers to know whether there are interrupts from the slave. And it cannot read CCCR registers to know we don't support 4-bit mode anymore, please do this at your own risk.

`SDIO_SLAVE_FLAG_INTERNAL_PULLUP`

Enable internal pullups for enabled pins. It is required by the SD specification that all the 4 data lines should be pulled up even in 1-bit mode or SPI mode. Note that the internal pull-ups are not sufficient

for stable communication, please do connect external pull-ups on the bus. This is only for example and debug use.

Type Definitions

typedef void (***sdio_event_cb_t**)(uint8_t event)

typedef void ***sdio_slave_buf_handle_t**

Handle of a receive buffer, register a handle by calling `sdio_slave_recv_register_buf`. Use the handle to load the buffer to the driver, or call `sdio_slave_recv_unregister_buf` if it is no longer used.

Enumerations

enum sdio_slave_hostint_t

Mask of interrupts sending to the host.

Values:

SDIO_SLAVE_HOSTINT_SEND_NEW_PACKET = HOST_SLC0_RX_NEW_PACKET_INT_ENA

New packet available.

SDIO_SLAVE_HOSTINT_RECV_OVF = HOST_SLC0_TX_OVF_INT_ENA

Slave receive buffer overflow.

SDIO_SLAVE_HOSTINT_SEND_UDF = HOST_SLC0_RX_UDF_INT_ENA

Slave sending buffer underflow (this case only happen when the host do not request for packet according to the packet len).

SDIO_SLAVE_HOSTINT_BIT7 = HOST_SLC0_TOHOST_BIT7_INT_ENA

General purpose interrupt bits that can be used by the user.

SDIO_SLAVE_HOSTINT_BIT6 = HOST_SLC0_TOHOST_BIT6_INT_ENA

SDIO_SLAVE_HOSTINT_BIT5 = HOST_SLC0_TOHOST_BIT5_INT_ENA

SDIO_SLAVE_HOSTINT_BIT4 = HOST_SLC0_TOHOST_BIT4_INT_ENA

SDIO_SLAVE_HOSTINT_BIT3 = HOST_SLC0_TOHOST_BIT3_INT_ENA

SDIO_SLAVE_HOSTINT_BIT2 = HOST_SLC0_TOHOST_BIT2_INT_ENA

SDIO_SLAVE_HOSTINT_BIT1 = HOST_SLC0_TOHOST_BIT1_INT_ENA

SDIO_SLAVE_HOSTINT_BIT0 = HOST_SLC0_TOHOST_BIT0_INT_ENA

enum sdio_slave_timing_t

Timing of SDIO slave.

Values:

`SDIO_SLAVE_TIMING_PSEND_PSAMPLE` = 0
: Send at posedge, and sample at posedge. Default value for HS mode. Normally there' s no problem using this to work in DS mode.

`SDIO_SLAVE_TIMING_NSEND_PSAMPLE`
: Send at negedge, and sample at posedge. Default value for DS mode and below.

`SDIO_SLAVE_TIMING_PSEND_NSAMPLE`
: Send at posedge, and sample at negedge.

`SDIO_SLAVE_TIMING_NSEND_NSAMPLE`
: Send at negedge, and sample at negedge.

`enum sdio_slave_sending_mode_t`
: Configuration of SDIO slave mode.

Values:

`SDIO_SLAVE_SEND_STREAM` = 0
: Stream mode, all packets to send will be combined as one if possible.

`SDIO_SLAVE_SEND_PACKET` = 1
: Packet mode, one packets will be sent one after another (only increase packet_len if last packet sent).

3.3.14 Sigma-delta Modulation

Introduction

ESP32 has a second-order sigma-delta modulation module. This driver configures the channels of the sigma-delta module.

Functionality Overview

There are eight independent sigma-delta modulation channels identified with *sigmadelta_channel_t*. Each channel is capable to output the binary, hardware generated signal with the sigma-delta modulation.

Selected channel should be set up by providing configuration parameters in *sigmadelta_config_t* and then applying this configuration with *sigmadelta_config()*.

Another option is to call individual functions, that will configure all required parameters one by one:

- **Prescaler** of the sigma-delta generator - *sigmadelta_set_prescale()*
- **Duty** of the output signal - *sigmadelta_set_duty()*
- **GPIO pin** to output modulated signal - *sigmadelta_set_pin()*

The range of the 'duty' input parameter of *sigmadelta_set_duty()* is from -128 to 127 (eight bit signed integer). If zero value is set, then the output signal' s duty will be about 50%, see description of *sigmadelta_set_duty()*.

Application Example

Sigma-delta Modulation example: peripherals/sigmadelta.

API Reference

Header File

- driver/include/driver/sigmadelta.h

Functions

esp_err_t **sigmadelta_config**(**const** *sigmadelta_config_t* **config*)

Configure Sigma-delta channel.

Return

- ESP_OK Success
- ESP_ERR_INVALID_ARG Parameter error

Parameters

- `config`: Pointer of Sigma-delta channel configuration struct

esp_err_t **sigmadelta_set_duty**(*sigmadelta_channel_t* *channel*, int8_t *duty*)

Set Sigma-delta channel duty.

This function is used to set Sigma-delta channel duty, If you add a capacitor between the output pin and ground, the average output voltage will be Vdc = VDDIO / 256 * duty + VDDIO/2, where VDDIO is the power supply voltage.

Return

- ESP_OK Success
- ESP_ERR_INVALID_ARG Parameter error

Parameters

- `channel`: Sigma-delta channel number
- `duty`: Sigma-delta duty of one channel, the value ranges from -128 to 127, recommended range is -90 ~ 90. The waveform is more like a random one in this range.

esp_err_t **sigmadelta_set_prescale**(*sigmadelta_channel_t channel*, uint8_t *prescale*)

Set Sigma-delta channel' s clock pre-scale value. The source clock is APP_CLK, 80MHz. The clock frequency of the sigma-delta channel is APP_CLK / pre_scale.

Return

- ESP_OK Success
- ESP_ERR_INVALID_ARG Parameter error

Parameters

- `channel`: Sigma-delta channel number
- `prescale`: The divider of source clock, ranges from 0 to 255

esp_err_t **sigmadelta_set_pin**(*sigmadelta_channel_t channel*, *gpio_num_t gpio_num*)

Set Sigma-delta signal output pin.

Return

- ESP_OK Success
- ESP_ERR_INVALID_ARG Parameter error

Parameters

- `channel`: Sigma-delta channel number
- `gpio_num`: GPIO number of output pin.

Structures

struct sigmadelta_config_t

Sigma-delta configure struct.

Public Members

sigmadelta_channel_t **channel**

Sigma-delta channel number

int8_t **sigmadelta_duty**

Sigma-delta duty, duty ranges from -128 to 127.

uint8_t **sigmadelta_prescale**

Sigma-delta prescale, prescale ranges from 0 to 255.

uint8_t **sigmadelta_gpio**

Sigma-delta output io number, refer to gpio.h for more details.

Enumerations

enum sigmadelta_channel_t

Sigma-delta channel list.

Values:

SIGMADELTA_CHANNEL_0 = 0

Sigma-delta channel 0

SIGMADELTA_CHANNEL_1 = 1

Sigma-delta channel 1

SIGMADELTA_CHANNEL_2 = 2

Sigma-delta channel 2

SIGMADELTA_CHANNEL_3 = 3

Sigma-delta channel 3

SIGMADELTA_CHANNEL_4 = 4

Sigma-delta channel 4

SIGMADELTA_CHANNEL_5 = 5

Sigma-delta channel 5

SIGMADELTA_CHANNEL_6 = 6

Sigma-delta channel 6

SIGMADELTA_CHANNEL_7 = 7

Sigma-delta channel 7

SIGMADELTA_CHANNEL_MAX

3.3.15 SPI Master driver

Overview

The ESP32 has four SPI peripheral devices, called SPI0, SPI1, HSPI and VSPI. SPI0 is entirely dedicated to the flash cache the ESP32 uses to map the SPI flash device it is connected to into memory. SPI1 is connected to the same hardware lines as SPI0 and is used to write to the flash chip. HSPI and VSPI are free to use. SPI1, HSPI and VSPI all have three chip select lines, allowing them to drive up to three SPI devices each as a master.

The spi_master driver

The spi_master driver allows easy communicating with SPI slave devices, even in a multithreaded environment. It fully transparently handles DMA transfers to read and write data and automatically takes care of

multiplexing between different SPI slaves on the same master.

注解: Notes about thread safety

The SPI driver API is thread safe when multiple SPI devices on the same bus are accessed from different tasks. However, the driver is not thread safe if the same SPI device is accessed from multiple tasks.

In this case, it is recommended to either refactor your application so only a single task accesses each SPI device, or to add mutex locking around access of the shared device.

Terminology

The spi_master driver uses the following terms:

- Host: The SPI peripheral inside the ESP32 initiating the SPI transmissions. One of SPI, HSPI or VSPI. (For now, only HSPI or VSPI are actually supported in the driver; it will support all 3 peripherals somewhere in the future.)
- Bus: The SPI bus, common to all SPI devices connected to one host. In general the bus consists of the miso, mosi, sclk and optionally quadwp and quadhd signals. The SPI slaves are connected to these signals in parallel.
  - miso - Also known as q, this is the input of the serial stream into the ESP32
  - mosi - Also known as d, this is the output of the serial stream from the ESP32
  - sclk - Clock signal. Each data bit is clocked out or in on the positive or negative edge of this signal
  - quadwp - Write Protect signal. Only used for 4-bit (qio/qout) transactions.
  - quadhd - Hold signal. Only used for 4-bit (qio/qout) transactions.
- Device: A SPI slave. Each SPI slave has its own chip select (CS) line, which is made active when a transmission to/from the SPI slave occurs.
- Transaction: One instance of CS going active, data transfer from and/or to a device happening, and CS going inactive again. Transactions are atomic, as in they will never be interrupted by another transaction.

SPI transactions

A transaction on the SPI bus consists of five phases, any of which may be skipped:

- The command phase. In this phase, a command (0-16 bit) is clocked out.
- The address phase. In this phase, an address (0-64 bit) is clocked out.

- The write phase. The master sends data to the slave.
- The dummy phase. The phase is configurable, used to meet the timing requirements.
- The read phase. The slave sends data to the master.

In full duplex mode, the read and write phases are combined, and the SPI host reads and writes data simultaneously. The total transaction length is decided by `command_bits + address_bits + trans_conf.length`, while the `trans_conf.rx_length` only determins length of data received into the buffer.

While in half duplex mode, the host have independent write and read phases. The length of write phase and read phase are decided by `trans_conf.length` and `trans_conf.rx_length` respectively.

The command and address phase are optional in that not every SPI device will need to be sent a command and/or address. This is reflected in the device configuration: when the `command_bits` or `address_bits` fields are set to zero, no command or address phase is done.

Something similar is true for the read and write phase: not every transaction needs both data to be written as well as data to be read. When `rx_buffer` is NULL (and SPI_USE_RXDATA) is not set) the read phase is skipped. When `tx_buffer` is NULL (and SPI_USE_TXDATA) is not set) the write phase is skipped.

The driver offers two different kinds of transactions: the interrupt transactions and the polling transactions. Each device can choose one kind of transaction to send. See *Notes to send mixed transactions to the same device* if your device do require both kinds of transactions.

Interrupt transactions

The interrupt transactions use an interrupt-driven logic when the transactions are in-flight. The routine will get blocked, allowing the CPU to run other tasks, while it is waiting for a transaction to be finished.

Interrupt transactions can be queued into a device, the driver automatically send them one-by-one in the ISR. A task can queue several transactions, and then do something else before the transactions are finished.

Polling transactions

The polling transactions don' t rely on the interrupt, the routine keeps polling the status bit of the SPI peripheral until the transaction is done.

All the tasks that do interrupt transactions may get blocked by the queue, at which point they need to wait for the ISR to run twice before the transaction is done. Polling transactions save the time spent on queue handling and context switching, resulting in a smaller transaction interval smaller. The disadvantage is that the the CPU is busy while these transactions are in flight.

The `spi_device_polling_end` routine spends at least 1us overhead to unblock other tasks when the transaction is done. It is strongly recommended to wrap a series of polling transactions inside of `spi_device_acquire_bus` and `spi_device_release_bus` to avoid the overhead. (See *Bus acquiring*)

Command and address phases

During the command and address phases, `cmd` and `addr` field in the `spi_transaction_t` struct are sent to the bus, while nothing is read at the same time. The default length of command and address phase are set in the `spi_device_interface_config_t` and by `spi_bus_add_device`. When the the flag `SPI_TRANS_VARIABLE_CMD` and `SPI_TRANS_VARIABLE_ADDR` are not set in the `spi_transaction_t`,the driver automatically set the length of these phases to the default value as set when the device is initialized respectively.

If the length of command and address phases needs to be variable, declare a `spi_transaction_ext_t` descriptor, set the flag `SPI_TRANS_VARIABLE_CMD` or/and `SPI_TRANS_VARIABLE_ADDR` in the `flags` of `base` member and configure the rest part of `base` as usual. Then the length of each phases will be `command_bits` and `address_bits` set in the `spi_transaction_ext_t`.

Write and read phases

Normally, data to be transferred to or from a device will be read from or written to a chunk of memory indicated by the `rx_buffer` and `tx_buffer` members of the transaction structure. When DMA is enabled for transfers, these buffers are highly recommended to meet the requirements as below:

1. allocated in DMA-capable memory using `pvPortMallocCaps(size, MALLOC_CAP_DMA)`;
2. 32-bit aligned (start from the boundary and have length of multiples of 4 bytes).

If these requirements are not satisfied, efficiency of the transaction will suffer due to the allocation and memcpy of temporary buffers.

注解: Half duplex transactions with both read and write phases are not supported when using DMA. See *Known Issues* for details and workarounds.

Bus acquiring

Sometimes you may want to send spi transactions exclusively, continuously, to make it as fast as possible. You may use `spi_device_acquire_bus` and `spi_device_release_bus` to realize this. When the bus is acquired, transactions to other devices (no matter polling or interrupt) are pending until the bus is released.

Using the spi_master driver

- Initialize a SPI bus by calling `spi_bus_initialize`. Make sure to set the correct IO pins in the `bus_config` struct. Take care to set signals that are not needed to -1.

- Tell the driver about a SPI slave device connected to the bus by calling spi_bus_add_device. Make sure to configure any timing requirements the device has in the `dev_config` structure. You should now have a handle for the device, to be used when sending it a transaction.
- To interact with the device, fill one or more spi_transaction_t structure with any transaction parameters you need. Then send them either in a polling way or the interrupt way:
  - ***Interrupt*** Either queue all transactions by calling `spi_device_queue_trans`, and at a later time query the result using `spi_device_get_trans_result`, or handle all requests synchroneously by feeding them into `spi_device_transmit`.
  - ***Polling*** Call the `spi_device_polling_transmit` to send polling transactions. Alternatively, you can send a polling transaction by `spi_device_polling_start` and `spi_device_polling_end` if you want to insert something between them.
- Optional: to do back-to-back transactions to a device, call `spi_device_acquire_bus` before and `spi_device_release_bus` after the transactions.
- Optional: to unload the driver for a device, call `spi_bus_remove_device` with the device handle as an argument
- Optional: to remove the driver for a bus, make sure no more drivers are attached and call `spi_bus_free`.

Tips

1. **Transactions with small amount of data:** Sometimes, the amount of data is very small making it less than optimal allocating a separate buffer for it. If the data to be transferred is 32 bits or less, it can be stored in the transaction struct itself. For transmitted data, use the `tx_data` member for this and set the `SPI_USE_TXDATA` flag on the transmission. For received data, use `rx_data` and set `SPI_USE_RXDATA`. In both cases, do not touch the `tx_buffer` or `rx_buffer` members, because they use the same memory locations as `tx_data` and `rx_data`.
2. **Transactions with integers other than uint8_t** The SPI peripheral reads and writes the memory byte-by-byte. By default, the SPI works at MSB first mode, each bytes are sent or received from the MSB to the LSB. However, if you want to send data with length which is not multiples of 8 bits, unused bits are sent.

   E.g. you write `uint8_t data = 0x15` (00010101B), and set length to only 5 bits, the sent data is `00010B` rather than expected `10101B`.

   Moreover, ESP32 is a little-endian chip whose lowest byte is stored at the very beginning address for uint16_t and uint32_t variables. Hence if a uint16_t is stored in the memory, it' s bit 7 is first sent, then bit 6 to 0, then comes its bit 15 to bit 8.

   To send data other than uint8_t arrays, macros `SPI_SWAP_DATA_TX` is provided to shift your data to the MSB and swap the MSB to the lowest address; while `SPI_SWAP_DATA_RX` can be used to

swap received data from the MSB to it' s correct place.

GPIO matrix and IOMUX

Most peripheral signals in ESP32 can connect directly to a specific GPIO, which is called its IOMUX pin. When a peripheral signal is routed to a pin other than its IOMUX pin, ESP32 uses the less direct GPIO matrix to make this connection.

If the driver is configured with all SPI signals set to their specific IOMUX pins (or left unconnected), it will bypass the GPIO matrix. If any SPI signal is configured to a pin other than its IOMUx pin, the driver will automatically route all the signals via the GPIO Matrix. The GPIO matrix samples all signals at 80MHz and sends them between the GPIO and the peripheral.

When the GPIO matrix is used, signals faster than 40MHz cannot propagate and the setup time of MISO is more easily violated, since the input delay of MISO signal is increased. The maximum clock frequency with GPIO Matrix is 40MHz or less, whereas using all IOMUX pins allows 80MHz.

注解: More details about influence of input delay on the maximum clock frequency, see *Timing considerations* below.

IOMUX pins for SPI controllers are as below:

Pin Name	HSPI	VSPI
	GPIO Number	
CS0*	15	5
SCLK	14	18
MISO	12	19
MOSI	13	23
QUADWP	2	22
QUADHD	4	21

note * Only the first device attaching to the bus can use CS0 pin.

Notes to send mixed transactions to the same device

Though we suggest to send only one type (interrupt or polling) of transactions to one device to reduce coding complexity, it is supported to send both interrupt and polling transactions alternately. Notes below is to help you do this.

The polling transactions should be started when all the other transactions are finished, no matter they are polling or interrupt.

An unfinished polling transaction forbid other transactions from being sent. Always call `spi_device_polling_end` after `spi_device_polling_start` to allow other device using the bus, or allow other transactions to be started to the same device. You can use `spi_device_polling_transmit` to simplify this if you don't need to do something during your polling transaction.

An in-flight polling transaction would get disturbed by the ISR operation caused by interrupt transactions. Always make sure all the interrupt transactions sent to the ISR are finished before you call `spi_device_polling_start`. To do that, you can call `spi_device_get_trans_result` until all the transactions are returned.

It is strongly recommended to send mixed transactions to the same device in only one task to control the calling sequence of functions.

Speed and Timing Considerations

Transferring speed

There're three factors limiting the transferring speed: (1) The transaction interval, (2) The SPI clock frequency used. (3) The cache miss of SPI functions including callbacks. When large transactions are used, the clock frequency determines the transferring speed; while the interval effects the speed a lot if small transactions are used.

1. Transaction interval: It takes time for the software to setup spi peripheral registers as well as copy data to FIFOs, or setup DMA links. When the interrupt transactions are used, an extra overhead is appended, from the cost of FreeRTOS queues and the time switching between tasks and the ISR.

    1. For **interrupt transactions**, the CPU can switched to other tasks when the transaction is in flight. This save the cpu time but increase the interval (See *Interrupt transactions*). For **polling transactions**, it does not block the task but do polling when the transaction is in flight. (See *Polling transactions*).

    2. When the DMA is enabled, it needs about 2us per transaction to setup the linked list. When the master is transferring, it automatically read data from the linked list. If the DMA is not enabled, CPU has to write/read each byte to/from the FIFO by itself. Usually this is faster than 2us, but the transaction length is limited to 64 bytes for both write and read.

    Typical transaction interval with one byte data is as below:

	Typical Transaction Time (us)	
	Interrupt	Polling
DMA	24	8
No DMA	22	7

2. SPI clock frequency: Each byte transferred takes 8 times of the clock period *8/fspi*. If the clock frequency is too high, some functions may be limited to use. See *Timing considerations*.

3. The cache miss: the default config puts only the ISR into the IRAM. Other SPI related functions including the driver itself and the callback may suffer from the cache miss and wait for some time while reading code from the flash. Select *CONFIG_SPI_MASTER_IN_IRAM* to put the whole SPI driver into IRAM, and put the entire callback(s) and its callee functions into IRAM to prevent this.

For an interrupt transaction, the overall cost is *20+8n/Fspi[MHz]* [us] for n bytes tranferred in one transaction. Hence the transferring speed is : *n/(20+8n/Fspi)*. Example of transferring speed under 8MHz clock speed:

Frequency (MHz)	Transaction Interval (us)	Transaction Length (bytes)	Total Time (us)	Total Speed (kBps)
8	25	1	26	38.5
8	25	8	33	242.4
8	25	16	41	490.2
8	25	64	89	719.1
8	25	128	153	836.6

When the length of transaction is short, the cost of transaction interval is really high. Please try to squash data into one transaction if possible to get higher transfer speed.

BTW, the ISR is disabled during flash operation by default. To keep sending transactions during flash operations, enable *CONFIG_SPI_MASTER_ISR_IN_IRAM* and set `ESP_INTR_FLAG_IRAM` in the `intr_flags` member of *spi_bus_config_t*. Then all the transactions queued before the flash operations will be handled by the ISR continuously during flash operation. Note that the callback of each devices, and their callee functions, should be in the IRAM in this case, or your callback will crash due to cache miss.

Timing considerations

As shown in the figure below, there is a delay on the MISO signal after SCLK launch edge and before it' s latched by the internal register. As a result, the MISO pin setup time is the limiting factor for SPI clock speed. When the delay is too large, setup slack is < 0 and the setup timing requirement is violated, leads to the failure of reading correctly.

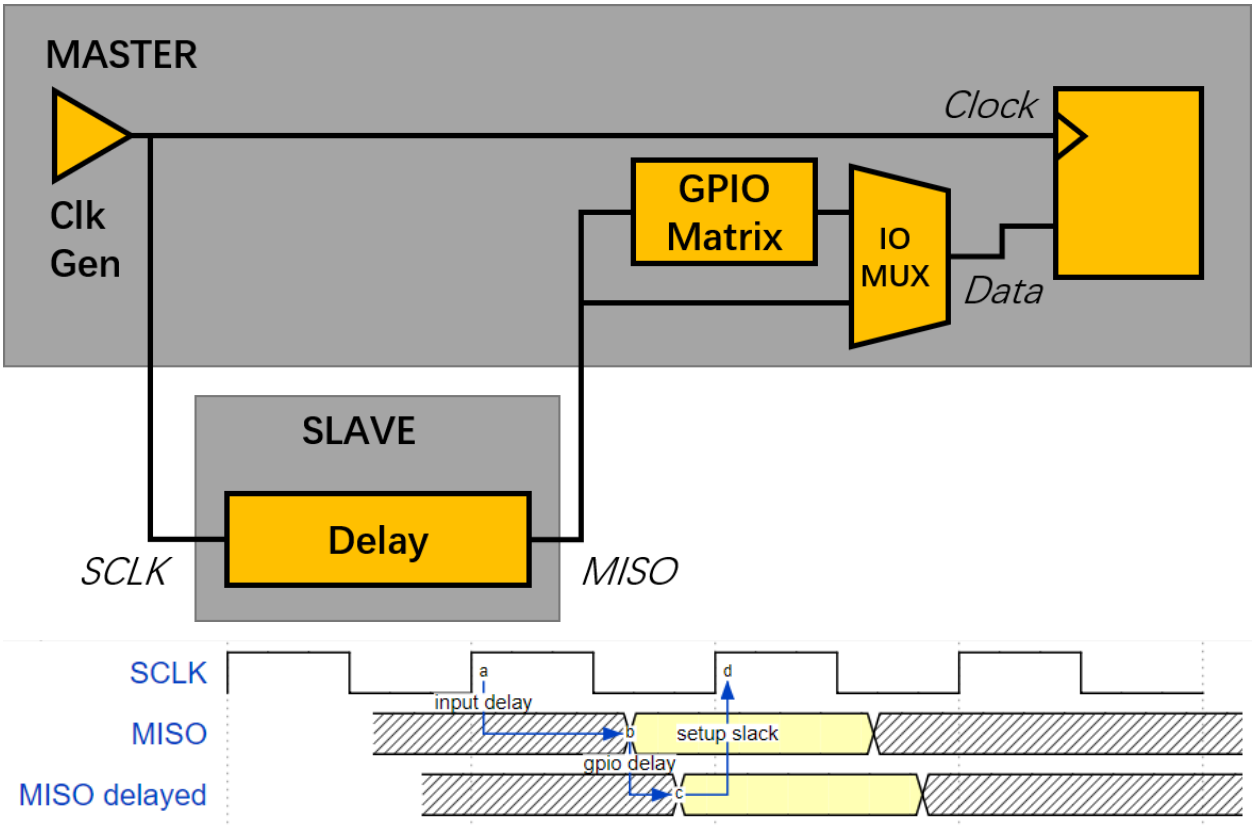

The maximum frequency allowed is related to the *input delay* (maximum valid time after SCLK on the MISO bus), as well as the usage of GPIO matrix. The maximum frequency allowed is reduced to about 33~77% (related to existing *input delay*) when the GPIO matrix is used. To work at higher frequency, you have to use the IOMUX pins or the *dummy bit workaround*. You can get the maximum reading frequency of the master by `spi_get_freq_limit`.

Dummy bit workaround: We can insert dummy clocks (during which the host does not read data) before the read phase actually begins. The slave still sees the dummy clocks and gives out data, but the host does not read until the read phase. This compensates the lack of setup time of MISO required by the host, allowing the host reading at higher frequency.

In the ideal case (the slave is so fast that the input delay is shorter than an apb clock, 12.5ns), the maximum frequency host can read (or read and write) under different conditions is as below:

Frequency Limit (MHz)		Dummy Bits Used By Driver	Comments
GPIO matrix	IOMUX pins		
26.6	80	No	
40	–	Yes	Half Duplex, no DMA allowed

And if the host only writes, the *dummy bit workaround* is not used and the frequency limit is as below:

GPIO matrix (MHz)	IOMUX pins (MHz)
40	80

The spi master driver can work even if the *input delay* in the `spi_device_interface_config_t` is set to 0. However, setting a accurate value helps to: (1) calculate the frequency limit in full duplex mode, and (2) compensate the timing correctly by dummy bits in half duplex mode. You may find the maximum data valid time after the launch edge of SPI clocks in the AC characteristics chapter of the device specifications, or measure the time on a oscilloscope or logic analyzer.

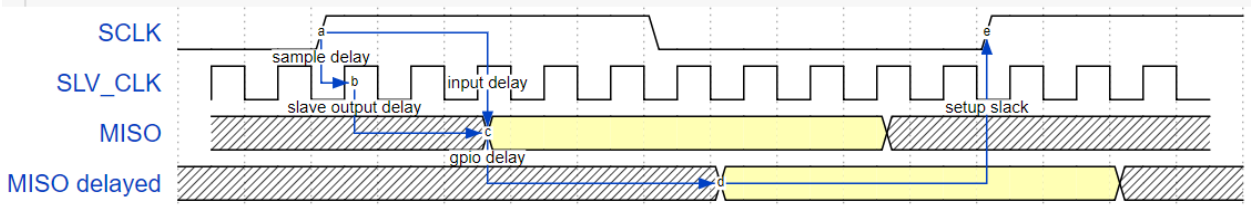

As shown in the figure above, the input delay is usually:

[input delay] = [sample delay] + [slave output delay]

1. The sample delay is the maximum random delay due to the asynchronization of SCLK and peripheral clock of the slave. It' s usually 1 slave peripheral clock if the clock is asynchronize with SCLK, or 0 if the slave just use the SCLK to latch the SCLK and launch MISO data. e.g. for ESP32 slaves, the delay is 12.5ns (1 apb clock), while it is reduced to 0 if the slave is in the same chip as the master.
2. The slave output delay is the time for the MOSI to be stable after the launch edge. e.g. for ESP32 slaves, the output delay is 37.5ns (3 apb clocks) when IOMUX pins in the slave is used, or 62.5ns (5 apb clocks) if through the GPIO matrix.

Some typical delays are shown in the following table:

Device	Input delay (ns)
Ideal device	0
ESP32 slave IOMUX*	50
ESP32 slave GPIO*	75
ESP32 slave is on an independent chip, 12.5ns sample delay included.	

The MISO path delay(tv), consists of slave *input delay* and master *GPIO matrix delay*, finally determines the frequency limit, above which the full duplex mode will not work, or dummy bits are used in the half duplex mode. The frequency limit is:

Freq limit[MHz] = 80 / (floor(MISO delay[ns]/12.5) + 1)

The figure below shows the relations of frequency limit against the input delay. 2 extra apb clocks should be counted into the MISO delay if the GPIO matrix in the master is used.

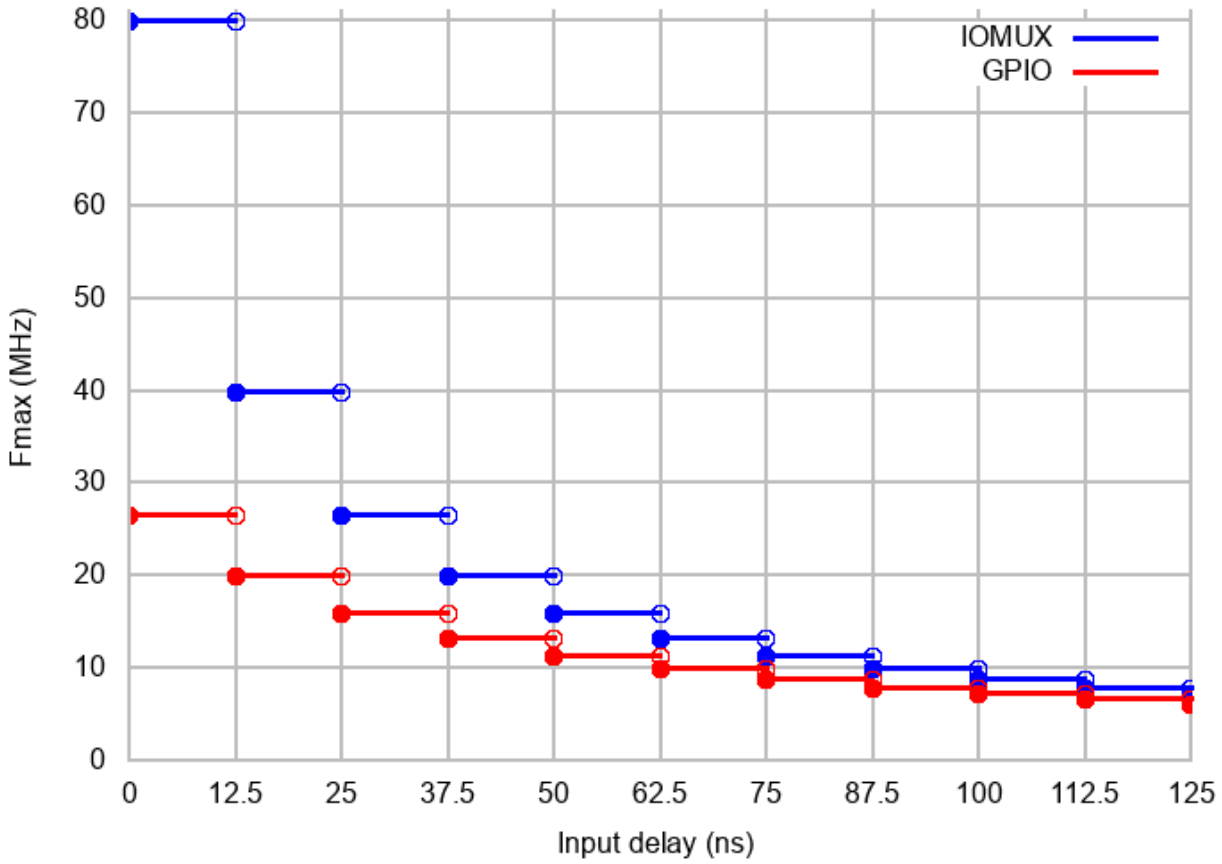

Corresponding frequency limit for different devices with different *input delay* are shown in the following table:

Master	Input delay (ns)	MISO path delay (ns)	Freq. limit (MHz)
IOMUX (0ns)	0	0	80
	50	50	16
	75	75	11.43
GPIO (25ns)	0	25	26.67
	50	75	11.43
	75	100	8.89

Known Issues

1. Half duplex mode is not compatible with DMA when both writing and reading phases exist.

   If such transactions are required, you have to use one of the alternative solutions:

   1. use full-duplex mode instead.
   2. disable the DMA by setting the last parameter to 0 in bus initialization function just as below: `ret=spi_bus_initialize(VSPI_HOST, &buscfg, 0);`

this may prohibit you from transmitting and receiving data longer than 64 bytes.

3. try to use command and address field to replace the write phase.

2. Full duplex mode is not compatible with the *dummy bit workaround*, hence the frequency is limited. See *dummy bit speed-up workaround*.
3. `cs_ena_pretrans` is not compatible with command, address phases in full duplex mode.

Application Example

Display graphics on the 320x240 LCD of WROVER-Kits: peripherals/spi_master.

API Reference - SPI Common

Header File

- driver/include/driver/spi_common.h

Functions

bool **spicommon_periph_claim**(*spi_host_device_t* *host*, **const** char ***source*)

Try to claim a SPI peripheral.

Call this if your driver wants to manage a SPI peripheral.

Return True if peripheral is claimed successfully; false if peripheral already is claimed.

Parameters

- `host`: Peripheral to claim
- `source`: The caller indentification string.

bool **spicommon_periph_in_use**(*spi_host_device_t* *host*)

Check whether the spi periph is in use.

Return True if in use, otherwise false.

Parameters

- `host`: Peripheral to check.

bool **spicommon_periph_free**(*spi_host_device_t* *host*)

Return the SPI peripheral so another driver can claim it.

Return True if peripheral is returned successfully; false if peripheral was free to claim already.

Parameters

- `host`: Peripheral to return

bool **spicommon_dma_chan_claim**(int *dma_chan*)

Try to claim a SPI DMA channel.

Call this if your driver wants to use SPI with a DMA channnel.

Return True if success; false otherwise.

Parameters

- `dma_chan`: channel to claim

bool **spicommon_dma_chan_in_use**(int *dma_chan*)

Check whether the spi DMA channel is in use.

Return True if in use, otherwise false.

Parameters

- `dma_chan`: DMA channel to check.

bool **spicommon_dma_chan_free**(int *dma_chan*)

Return the SPI DMA channel so other driver can claim it, or just to power down DMA.

Return True if success; false otherwise.

Parameters

- `dma_chan`: channel to return

esp_err_t **spicommon_bus_initialize_io**(*spi_host_device_t* *host*, **const** *spi_bus_config_t* **bus_config*, int *dma_chan*, uint32_t *flags*, uint32_t **flags_o*)

Connect a SPI peripheral to GPIO pins.

This routine is used to connect a SPI peripheral to the IO-pads and DMA channel given in the arguments. Depending on the IO-pads requested, the routing is done either using the IO_mux or using the GPIO matrix.

Return

- ESP_ERR_INVALID_ARG if parameter is invalid
- ESP_OK on success

Parameters

- `host`: SPI peripheral to be routed

- `bus_config`: Pointer to a spi_bus_config struct detailing the GPIO pins
- `dma_chan`: DMA-channel (1 or 2) to use, or 0 for no DMA.
- `flags`: Combination of SPICOMMON_BUSFLAG_* flags, set to ensure the pins set are capable with some functions:
  - `SPICOMMON_BUSFLAG_MASTER`: Initialize I/O in master mode
  - `SPICOMMON_BUSFLAG_SLAVE`: Initialize I/O in slave mode
  - `SPICOMMON_BUSFLAG_NATIVE_PINS`: Pins set should match the iomux pins of the controller.
  - `SPICOMMON_BUSFLAG_SCLK`, `SPICOMMON_BUSFLAG_MISO`, `SPICOMMON_BUSFLAG_MOSI`: Make sure SCLK/MISO/MOSI is/are set to a valid GPIO. Also check output capability according to the mode.
  - `SPICOMMON_BUSFLAG_DUAL`: Make sure both MISO and MOSI are output capable so that DIO mode is capable.
  - `SPICOMMON_BUSFLAG_WPHD` Make sure WP and HD are set to valid output GPIOs.
  - `SPICOMMON_BUSFLAG_QUAD`: Combination of `SPICOMMON_BUSFLAG_DUAL` and `SPICOMMON_BUSFLAG_WPHD`.
- `flags_o`: A SPICOMMON_BUSFLAG_* flag combination of bus abilities will be written to this address. Leave to NULL if not needed.
  - `SPICOMMON_BUSFLAG_NATIVE_PINS`: The bus is connected to iomux pins.
  - `SPICOMMON_BUSFLAG_SCLK`, `SPICOMMON_BUSFLAG_MISO`, `SPICOMMON_BUSFLAG_MOSI`: The bus has CLK/MISO/MOSI connected.
  - `SPICOMMON_BUSFLAG_DUAL`: The bus is capable with DIO mode.
  - `SPICOMMON_BUSFLAG_WPHD` The bus has WP and HD connected.
  - `SPICOMMON_BUSFLAG_QUAD`: Combination of `SPICOMMON_BUSFLAG_DUAL` and `SPICOMMON_BUSFLAG_WPHD`.

esp_err_t **spicommon_bus_free_io**(*spi_host_device_t host*)

Free the IO used by a SPI peripheral.

Return

- ESP_ERR_INVALID_ARG if parameter is invalid
- ESP_OK on success

Parameters

- `host`: SPI peripheral to be freed

esp_err_t **spicommon_bus_free_io_cfg**(**const** *spi_bus_config_t* **bus_cfg*)

Free the IO used by a SPI peripheral.

Return

- ESP_ERR_INVALID_ARG if parameter is invalid
- ESP_OK on success

Parameters

- `bus_cfg`: Bus config struct which defines which pins to be used.

void **spicommon_cs_initialize**(*spi_host_device_t host*, int *cs_io_num*, int *cs_num*, int *force_gpio_matrix*)

Initialize a Chip Select pin for a specific SPI peripheral.

Parameters

- `host`: SPI peripheral
- `cs_io_num`: GPIO pin to route
- `cs_num`: CS id to route
- `force_gpio_matrix`: If true, CS will always be routed through the GPIO matrix. If false, if the GPIO number allows it, the routing will happen through the IO_mux.

void **spicommon_cs_free**(*spi_host_device_t host*, int *cs_num*)

Free a chip select line.

Parameters

- `host`: SPI peripheral
- `cs_num`: CS id to free

void **spicommon_cs_free_io**(int *cs_gpio_num*)

Free a chip select line.

Parameters

- `cs_gpio_num`: CS gpio num to free

void **spicommon_setup_dma_desc_links**(lldesc_t **dmadesc*, int *len*, **const** uint8_t **data*, bool *isrx*)

Setup a DMA link chain.

This routine will set up a chain of linked DMA descriptors in the array pointed to by `dmadesc`. Enough DMA descriptors will be used to fit the buffer of `len` bytes in, and the descriptors will point to the corresponding positions in `buffer` and linked together. The end result is that feeding `dmadesc[0]` into DMA hardware results in the entirety `len` bytes of `data` being read or written.

Parameters

- `dmadesc`: Pointer to array of DMA descriptors big enough to be able to convey `len` bytes
- `len`: Length of buffer
- `data`: Data buffer to use for DMA transfer
- `isrx`: True if data is to be written into `data`, false if it' s to be read from `data`.

spi_dev_t ***spicommon_hw_for_host**(*spi_host_device_t host*)

Get the position of the hardware registers for a specific SPI host.

Return A register descriptor stuct pointer, pointed at the hardware registers

Parameters

- `host`: The SPI host

int **spicommon_irqsource_for_host**(*spi_host_device_t host*)

Get the IRQ source for a specific SPI host.

Return The hosts IRQ source

Parameters

- `host`: The SPI host

bool **spicommon_dmaworkaround_req_reset**(int *dmachan*, *dmaworkaround_cb_t cb*, void **arg*)

Request a reset for a certain DMA channel.

Essentially, when a reset is needed, a driver can request this using spicommon_dmaworkaround_req_reset. This is supposed to be called with an user-supplied function as an argument. If both DMA channels are idle, this call will reset the DMA subsystem and return true. If the other DMA channel is still busy, it will return false; as soon as the other DMA channel is done, however, it will reset the DMA subsystem and call the callback. The callback is then supposed to be used to continue the SPI drivers activity.

Note In some (well-defined) cases in the ESP32 (at least rev v.0 and v.1), a SPI DMA channel will get confused. This can be remedied by resetting the SPI DMA hardware in case this happens. Unfortunately, the reset knob used for thsi will reset *both* DMA channels, and as such can only done safely when both DMA channels are idle. These functions coordinate this.

Return True when a DMA reset could be executed immediately. False when it could not; in this case the callback will be called with the specified argument when the logic can execute a reset, after that reset.

Parameters

- `dmachan`: DMA channel associated with the SPI host that needs a reset

- `cb`: Callback to call in case DMA channel cannot be reset immediately
- `arg`: Argument to the callback

bool **spicommon_dmaworkaround_reset_in_progress**()

Check if a DMA reset is requested but has not completed yet.

Return True when a DMA reset is requested but hasn't completed yet. False otherwise.

void **spicommon_dmaworkaround_idle**(int *dmachan*)

Mark a DMA channel as idle.

A call to this function tells the workaround logic that this channel will not be affected by a global SPI DMA reset.

void **spicommon_dmaworkaround_transfer_active**(int *dmachan*)

Mark a DMA channel as active.

A call to this function tells the workaround logic that this channel will be affected by a global SPI DMA reset, and a reset like that should not be attempted.

Structures

struct spi_bus_config_t

This is a configuration structure for a SPI bus.

You can use this structure to specify the GPIO pins of the bus. Normally, the driver will use the GPIO matrix to route the signals. An exception is made when all signals either can be routed through the IO_MUX or are -1. In that case, the IO_MUX is used, allowing for >40MHz speeds.

Note Be advised that the slave driver does not use the quadwp/quadhd lines and fields in *spi_bus_config_t* refering to these lines will be ignored and can thus safely be left uninitialized.

Public Members

int **mosi_io_num**

GPIO pin for Master Out Slave In (=spi_d) signal, or -1 if not used.

int **miso_io_num**

GPIO pin for Master In Slave Out (=spi_q) signal, or -1 if not used.

int **sclk_io_num**

GPIO pin for Spi CLocK signal, or -1 if not used.

int **quadwp_io_num**

GPIO pin for WP (Write Protect) signal which is used as D2 in 4-bit communication modes, or -1 if not used.

int **quadhd_io_num**

GPIO pin for HD (HolD) signal which is used as D3 in 4-bit communication modes, or -1 if not used.

int **max_transfer_sz**

Maximum transfer size, in bytes. Defaults to 4094 if 0.

uint32_t **flags**

Abilities of bus to be checked by the driver. Or-ed value of `SPICOMMON_BUSFLAG_*` flags.

int **intr_flags**

Interrupt flag for the bus to set the priority, and IRAM attribute, see `esp_intr_alloc.h`. Note that the EDGE, INTRDISABLED attribute are ignored by the driver. Note that if ESP_INTR_FLAG_IRAM is set, ALL the callbacks of the driver, and their callee functions, should be put in the IRAM.

Macros

`SPI_MAX_DMA_LEN`

`SPI_SWAP_DATA_TX`(DATA, LEN)

Transform unsigned integer of length <= 32 bits to the format which can be sent by the SPI driver directly.

E.g. to send 9 bits of data, you can:

```
uint16_t data = SPI_SWAP_DATA_TX(0x145, 9);
```

Then points tx_buffer to `&data`.

Parameters

- `DATA`: Data to be sent, can be uint8_t, uint16_t or uint32_t.
- `LEN`: Length of data to be sent, since the SPI peripheral sends from the MSB, this helps to shift the data to the MSB.

`SPI_SWAP_DATA_RX`(DATA, LEN)

Transform received data of length <= 32 bits to the format of an unsigned integer.

E.g. to transform the data of 15 bits placed in a 4-byte array to integer:

```
uint16_t data = SPI_SWAP_DATA_RX(*(uint32_t*)t->rx_data, 15);
```

Parameters

- `DATA`: Data to be rearranged, can be uint8_t, uint16_t or uint32_t.

- LEN: Length of data received, since the SPI peripheral writes from the MSB, this helps to shift the data to the LSB.

spicommon_periph_claim(host...)

__spicommon_periph_claim(host, source, n, ...)

__spicommon_periph_claim1(host, _)

__spicommon_periph_claim2(host, func)

SPICOMMON_BUSFLAG_SLAVE
Initialize I/O in slave mode.

SPICOMMON_BUSFLAG_MASTER
Initialize I/O in master mode.

SPICOMMON_BUSFLAG_NATIVE_PINS
Check using iomux pins. Or indicates the pins are configured through the IO mux rather than GPIO matrix.

SPICOMMON_BUSFLAG_SCLK
Check existing of SCLK pin. Or indicates CLK line initialized.

SPICOMMON_BUSFLAG_MISO
Check existing of MISO pin. Or indicates MISO line initialized.

SPICOMMON_BUSFLAG_MOSI
Check existing of MOSI pin. Or indicates CLK line initialized.

SPICOMMON_BUSFLAG_DUAL
Check MOSI and MISO pins can output. Or indicates bus able to work under DIO mode.

SPICOMMON_BUSFLAG_WPHD
Check existing of WP and HD pins. Or indicates WP & HD pins initialized.

SPICOMMON_BUSFLAG_QUAD
Check existing of MOSI/MISO/WP/HD pins as output. Or indicates bus able to work under QIO mode.

Type Definitions

typedef void (***dmaworkaround_cb_t**)(void *arg)
Callback, to be called when a DMA engine reset is completed

Enumerations

enum spi_host_device_t
Enum with the three SPI peripherals that are software-accessible in it.

Values:

`SPI_HOST` =0
SPI1, SPI.

`HSPI_HOST` =1
SPI2, HSPI.

`VSPI_HOST` =2
SPI3, VSPI.

API Reference - SPI Master

Header File

- driver/include/driver/spi_master.h

Functions

esp_err_t **spi_bus_initialize**(*spi_host_device_t host*, **const** *spi_bus_config_t* **bus_config*, int *dma_chan*)

Initialize a SPI bus.

Warning For now, only supports HSPI and VSPI.

Warning If a DMA channel is selected, any transmit and receive buffer used should be allocated in DMA-capable memory.

Warning The ISR of SPI is always executed on the core which calls this function. Never starve the ISR on this core or the SPI transactions will not be handled.

Return

- ESP_ERR_INVALID_ARG if configuration is invalid
- ESP_ERR_INVALID_STATE if host already is in use
- ESP_ERR_NO_MEM if out of memory
- ESP_OK on success

Parameters

- `host`: SPI peripheral that controls this bus
- `bus_config`: Pointer to a *spi_bus_config_t* struct specifying how the host should be initialized
- `dma_chan`: Either channel 1 or 2, or 0 in the case when no DMA is required. Selecting a DMA channel for a SPI bus allows transfers on the bus to have sizes only limited by the amount of

internal memory. Selecting no DMA channel (by passing the value 0) limits the amount of bytes transfered to a maximum of 32.

esp_err_t **spi_bus_free**(*spi_host_device_t host*)

Free a SPI bus.

Warning In order for this to succeed, all devices have to be removed first.

Return

- ESP_ERR_INVALID_ARG if parameter is invalid
- ESP_ERR_INVALID_STATE if not all devices on the bus are freed
- ESP_OK on success

Parameters

- `host`: SPI peripheral to free

esp_err_t **spi_bus_add_device**(*spi_host_device_t host*, `const` *spi_device_interface_config_t *dev_config*, *spi_device_handle_t *handle*)

Allocate a device on a SPI bus.

This initializes the internal structures for a device, plus allocates a CS pin on the indicated SPI master peripheral and routes it to the indicated GPIO. All SPI master devices have three CS pins and can thus control up to three devices.

Note While in general, speeds up to 80MHz on the dedicated SPI pins and 40MHz on GPIO-matrix-routed pins are supported, full-duplex transfers routed over the GPIO matrix only support speeds up to 26MHz.

Return

- ESP_ERR_INVALID_ARG if parameter is invalid
- ESP_ERR_NOT_FOUND if host doesn't have any free CS slots
- ESP_ERR_NO_MEM if out of memory
- ESP_OK on success

Parameters

- `host`: SPI peripheral to allocate device on
- `dev_config`: SPI interface protocol config for the device
- `handle`: Pointer to variable to hold the device handle

esp_err_t **spi_bus_remove_device**(*spi_device_handle_t handle*)

Remove a device from the SPI bus.

Return

- ESP_ERR_INVALID_ARG if parameter is invalid
- ESP_ERR_INVALID_STATE if device already is freed
- ESP_OK on success

Parameters

- `handle`: Device handle to free

esp_err_t **spi_device_queue_trans**(*spi_device_handle_t handle*, *spi_transaction_t* **trans_desc*, TickType_t *ticks_to_wait*)

Queue a SPI transaction for interrupt transaction execution. Get the result by `spi_device_get_trans_result`.

Note Normally a device cannot start (queue) polling and interrupt transactions simultaneously.

Return

- ESP_ERR_INVALID_ARG if parameter is invalid
- ESP_ERR_TIMEOUT if there was no room in the queue before ticks_to_wait expired
- ESP_ERR_NO_MEM if allocating DMA-capable temporary buffer failed
- ESP_ERR_INVALID_STATE if previous transactions are not finished
- ESP_OK on success

Parameters

- `handle`: Device handle obtained using spi_host_add_dev
- `trans_desc`: Description of transaction to execute
- `ticks_to_wait`: Ticks to wait until there' s room in the queue; use portMAX_DELAY to never time out.

esp_err_t **spi_device_get_trans_result**(*spi_device_handle_t handle*, *spi_transaction_t* ***trans_desc*, TickType_t *ticks_to_wait*)

Get the result of a SPI transaction queued earlier by `spi_device_queue_trans`.

This routine will wait until a transaction to the given device succesfully completed. It will then return the description of the completed transaction so software can inspect the result and e.g. free the memory or re-use the buffers.

Return

- ESP_ERR_INVALID_ARG if parameter is invalid
- ESP_ERR_TIMEOUT if there was no completed transaction before ticks_to_wait expired
- ESP_OK on success

Parameters

- `handle`: Device handle obtained using spi_host_add_dev
- `trans_desc`: Pointer to variable able to contain a pointer to the description of the transaction that is executed. The descriptor should not be modified until the descriptor is returned by spi_device_get_trans_result.
- `ticks_to_wait`: Ticks to wait until there' s a returned item; use portMAX_DELAY to never time out.

esp_err_t **spi_device_transmit**(*spi_device_handle_t handle*, *spi_transaction_t* **trans_desc*)

Send a SPI transaction, wait for it to complete, and return the result.

This function is the equivalent of calling spi_device_queue_trans() followed by spi_device_get_trans_result(). Do not use this when there is still a transaction separately queued (started) from spi_device_queue_trans() or polling_start/transmit that hasn' t been finalized.

Note This function is not thread safe when multiple tasks access the same SPI device. Normally a device cannot start (queue) polling and interrupt transactions simutanuously.

Return

- ESP_ERR_INVALID_ARG if parameter is invalid
- ESP_OK on success

Parameters

- `handle`: Device handle obtained using spi_host_add_dev
- `trans_desc`: Description of transaction to execute

esp_err_t **spi_device_polling_start**(*spi_device_handle_t handle*, *spi_transaction_t* **trans_desc*, TickType_t *ticks_to_wait*)

Immediately start a polling transaction.

Note Normally a device cannot start (queue) polling and interrupt transactions simutanuously. Moreover, a device cannot start a new polling transaction if another polling transaction is not finished.

Return

- ESP_ERR_INVALID_ARG if parameter is invalid
- ESP_ERR_TIMEOUT if the device cannot get control of the bus before `ticks_to_wait` expired
- ESP_ERR_NO_MEM if allocating DMA-capable temporary buffer failed
- ESP_ERR_INVALID_STATE if previous transactions are not finished
- ESP_OK on success

Parameters

- `handle`: Device handle obtained using spi_host_add_dev
- `trans_desc`: Description of transaction to execute
- `ticks_to_wait`: Ticks to wait until there' s room in the queue; currently only portMAX_DELAY is supported.

esp_err_t **spi_device_polling_end**(*spi_device_handle_t handle*, TickType_t *ticks_to_wait*)

Poll until the polling transaction ends.

This routine will not return until the transaction to the given device has succesfully completed. The task is not blocked, but actively busy-spins for the transaction to be completed.

Return

- ESP_ERR_INVALID_ARG if parameter is invalid
- ESP_ERR_TIMEOUT if the transaction cannot finish before ticks_to_wait expired
- ESP_OK on success

Parameters

- `handle`: Device handle obtained using spi_host_add_dev
- `ticks_to_wait`: Ticks to wait until there' s a returned item; use portMAX_DELAY to never time out.

esp_err_t **spi_device_polling_transmit**(*spi_device_handle_t handle*, *spi_transaction_t* **trans_desc*)

Send a polling transaction, wait for it to complete, and return the result.

This function is the equivalent of calling spi_device_polling_start() followed by spi_device_polling_end(). Do not use this when there is still a transaction that hasn' t been finalized.

Note This function is not thread safe when multiple tasks access the same SPI device. Normally a device cannot start (queue) polling and interrupt transactions simutanuously.

Return

- ESP_ERR_INVALID_ARG if parameter is invalid
- ESP_OK on success

Parameters

- `handle`: Device handle obtained using spi_host_add_dev
- `trans_desc`: Description of transaction to execute

esp_err_t **spi_device_acquire_bus**(*spi_device_handle_t* *device*, TickType_t *wait*)

Occupy the SPI bus for a device to do continuous transactions.

Transactions to all other devices will be put off until `spi_device_release_bus` is called.

Note The function will wait until all the existing transactions have been sent.

Return

- ESP_ERR_INVALID_ARG : `wait` is not set to portMAX_DELAY.
- ESP_OK : Success.

Parameters

- `device`: The device to occupy the bus.
- `wait`: Time to wait before the the bus is occupied by the device. Currently MUST set to portMAX_DELAY.

void **spi_device_release_bus**(*spi_device_handle_t* *dev*)

Release the SPI bus occupied by the device. All other devices can start sending transactions.

Parameters

- `dev`: The device to release the bus.

int **spi_cal_clock**(int *fapb*, int *hz*, int *duty_cycle*, uint32_t **reg_o*)

Calculate the working frequency that is most close to desired frequency, and also the register value.

Return Actual working frequency that most fit.

Parameters

- `fapb`: The frequency of apb clock, should be `APB_CLK_FREQ`.
- `hz`: Desired working frequency
- `duty_cycle`: Duty cycle of the spi clock
- `reg_o`: Output of value to be set in clock register, or NULL if not needed.

void **spi_get_timing**(bool *gpio_is_used*, int *input_delay_ns*, int *eff_clk*, int **dummy_o*, int **cycles_remain_o*)

Calculate the timing settings of specified frequency and settings.

Note If **dummy_o* is not zero, it means dummy bits should be applied in half duplex mode, and full duplex mode may not work.

Parameters

- `gpio_is_used`: True if using GPIO matrix, or False if iomux pins are used.

- `input_delay_ns`: Input delay from SCLK launch edge to MISO data valid.
- `eff_clk`: Effective clock frequency (in Hz) from spi_cal_clock.
- `dummy_o`: Address of dummy bits used output. Set to NULL if not needed.
- `cycles_remain_o`: Address of cycles remaining (after dummy bits are used) output.
  - -1 If too many cycles remaining, suggest to compensate half a clock.
  - 0 If no remaining cycles or dummy bits are not used.
  - positive value: cycles suggest to compensate.

int **spi_get_freq_limit**(bool *gpio_is_used*, int *input_delay_ns*)

Get the frequency limit of current configurations. SPI master working at this limit is OK, while above the limit, full duplex mode and DMA will not work, and dummy bits will be aplied in the half duplex mode.

Return Frequency limit of current configurations.

Parameters

- `gpio_is_used`: True if using GPIO matrix, or False if native pins are used.
- `input_delay_ns`: Input delay from SCLK launch edge to MISO data valid.

Structures

struct spi_device_interface_config_t

This is a configuration for a SPI slave device that is connected to one of the SPI buses.

Public Members

uint8_t **command_bits**

Default amount of bits in command phase (0-16), used when `SPI_TRANS_VARIABLE_CMD` is not used, otherwise ignored.

uint8_t **address_bits**

Default amount of bits in address phase (0-64), used when `SPI_TRANS_VARIABLE_ADDR` is not used, otherwise ignored.

uint8_t **dummy_bits**

Amount of dummy bits to insert between address and data phase.

uint8_t **mode**

SPI mode (0-3)

uint8_t **duty_cycle_pos**

Duty cycle of positive clock, in 1/256th increments (128 = 50%/50% duty). Setting this to 0 (=not setting it) is equivalent to setting this to 128.

uint8_t **cs_ena_pretrans**

Amount of SPI bit-cycles the cs should be activated before the transmission (0-16). This only works on half-duplex transactions.

uint8_t **cs_ena_posttrans**

Amount of SPI bit-cycles the cs should stay active after the transmission (0-16)

int **clock_speed_hz**

Clock speed, divisors of 80MHz, in Hz. See `SPI_MASTER_FREQ_*`.

int **input_delay_ns**

Maximum data valid time of slave. The time required between SCLK and MISO valid, including the possible clock delay from slave to master. The driver uses this value to give an extra delay before the MISO is ready on the line. Leave at 0 unless you know you need a delay. For better timing performance at high frequency (over 8MHz), it' s suggest to have the right value.

int **spics_io_num**

CS GPIO pin for this device, or -1 if not used.

uint32_t **flags**

Bitwise OR of SPI_DEVICE_* flags.

int **queue_size**

Transaction queue size. This sets how many transactions can be 'in the air' (queued using spi_device_queue_trans but not yet finished using spi_device_get_trans_result) at the same time.

transaction_cb_t **pre_cb**

Callback to be called before a transmission is started.

This callback is called within interrupt context should be in IRAM for best performance, see "Transferring Speed" section in the SPI Master documentation for full details. If not, the callback may crash during flash operation when the driver is initialized with ESP_INTR_FLAG_IRAM.

transaction_cb_t **post_cb**

Callback to be called after a transmission has completed.

This callback is called within interrupt context should be in IRAM for best performance, see "Transferring Speed" section in the SPI Master documentation for full details. If not, the callback may crash during flash operation when the driver is initialized with ESP_INTR_FLAG_IRAM.

struct spi_transaction_t

This structure describes one SPI transaction. The descriptor should not be modified until the transaction finishes.

Public Members

uint32_t **flags**

Bitwise OR of SPI_TRANS_* flags.

uint16_t **cmd**

Command data, of which the length is set in the `command_bits` of *spi_device_interface_config_t*.

NOTE: this field, used to be "command" in ESP-IDF 2.1 and before, is re-written to be used in a new way in ESP-IDF 3.0.

Example: write 0x0123 and command_bits=12 to send command 0x12, 0x3_ (in previous version, you may have to write 0x3_12).

uint64_t **addr**

Address data, of which the length is set in the `address_bits` of *spi_device_interface_config_t*.

NOTE: this field, used to be "address" in ESP-IDF 2.1 and before, is re-written to be used in a new way in ESP-IDF3.0.

Example: write 0x123400 and address_bits=24 to send address of 0x12, 0x34, 0x00 (in previous version, you may have to write 0x12340000).

size_t **length**

Total data length, in bits.

size_t **rxlength**

Total data length received, should be not greater than `length` in full-duplex mode (0 defaults this to the value of `length`).

void ***user**

User-defined variable. Can be used to store eg transaction ID.

const void ***tx_buffer**

Pointer to transmit buffer, or NULL for no MOSI phase.

uint8_t **tx_data**[4]

If SPI_USE_TXDATA is set, data set here is sent directly from this variable.

void ***rx_buffer**

Pointer to receive buffer, or NULL for no MISO phase. Written by 4 bytes-unit if DMA is used.

uint8_t **rx_data**[4]

If SPI_USE_RXDATA is set, data is received directly to this variable.

struct spi_transaction_ext_t

This struct is for SPI transactions which may change their address and command length. Please do set the flags in base to `SPI_TRANS_VARIABLE_CMD_ADR` to use the bit length here.

Public Members

struct *spi_transaction_t* **base**

Transaction data, so that pointer to *spi_transaction_t* can be converted into *spi_transaction_ext_t*.

uint8_t **command_bits**

The command length in this transaction, in bits.

uint8_t **address_bits**

The address length in this transaction, in bits.

Macros

SPI_MASTER_FREQ_8M

SPI master clock is divided by 80MHz apb clock. Below defines are example frequencies, and are accurate. Be free to specify a random frequency, it will be rounded to closest frequency (to macros below if above 8MHz). 8MHz

SPI_MASTER_FREQ_9M

8.89MHz

SPI_MASTER_FREQ_10M

10MHz

SPI_MASTER_FREQ_11M

11.43MHz

SPI_MASTER_FREQ_13M

13.33MHz

SPI_MASTER_FREQ_16M

16MHz

SPI_MASTER_FREQ_20M

20MHz

SPI_MASTER_FREQ_26M

26.67MHz

SPI_MASTER_FREQ_40M

40MHz

SPI_MASTER_FREQ_80M

80MHz

SPI_DEVICE_TXBIT_LSBFIRST

Transmit command/address/data LSB first instead of the default MSB first.

`SPI_DEVICE_RXBIT_LSBFIRST`
: Receive data LSB first instead of the default MSB first.

`SPI_DEVICE_BIT_LSBFIRST`
: Transmit and receive LSB first.

`SPI_DEVICE_3WIRE`
: Use MOSI (=spid) for both sending and receiving data.

`SPI_DEVICE_POSITIVE_CS`
: Make CS positive during a transaction instead of negative.

`SPI_DEVICE_HALFDUPLEX`
: Transmit data before receiving it, instead of simultaneously.

`SPI_DEVICE_CLK_AS_CS`
: Output clock on CS line if CS is active.

`SPI_DEVICE_NO_DUMMY`
: There are timing issue when reading at high frequency (the frequency is related to whether iomux pins are used, valid time after slave sees the clock).

  - In half-duplex mode, the driver automatically inserts dummy bits before reading phase to fix the timing issue. Set this flag to disable this feature.
  - In full-duplex mode, however, the hardware cannot use dummy bits, so there is no way to prevent data being read from getting corrupted. Set this flag to confirm that you' re going to work with output only, or read without dummy bits at your own risk.

`SPI_TRANS_MODE_DIO`
: Transmit/receive data in 2-bit mode.

`SPI_TRANS_MODE_QIO`
: Transmit/receive data in 4-bit mode.

`SPI_TRANS_USE_RXDATA`
: Receive into rx_data member of *spi_transaction_t* instead into memory at rx_buffer.

`SPI_TRANS_USE_TXDATA`
: Transmit tx_data member of *spi_transaction_t* instead of data at tx_buffer. Do not set tx_buffer when using this.

`SPI_TRANS_MODE_DIOQIO_ADDR`
: Also transmit address in mode selected by SPI_MODE_DIO/SPI_MODE_QIO.

`SPI_TRANS_VARIABLE_CMD`
: Use the `command_bits` in *spi_transaction_ext_t* rather than default value in *spi_device_interface_config_t*.

`SPI_TRANS_VARIABLE_ADDR`
: Use the `address_bits` in *spi_transaction_ext_t* rather than default value in

spi_device_interface_config_t.

Type Definitions

typedef struct *spi_transaction_t* **spi_transaction_t**

typedef void (***transaction_cb_t**)(*spi_transaction_t* *trans)

typedef struct spi_device_t ***spi_device_handle_t**

Handle for a device on a SPI bus.

3.3.16 SPI Slave driver

Overview

The ESP32 has four SPI peripheral devices, called SPI0, SPI1, HSPI and VSPI. SPI0 is entirely dedicated to the flash cache the ESP32 uses to map the SPI flash device it is connected to into memory. SPI1 is connected to the same hardware lines as SPI0 and is used to write to the flash chip. HSPI and VSPI are free to use, and with the spi_slave driver, these can be used as a SPI slave, driven from a connected SPI master.

The spi_slave driver

The spi_slave driver allows using the HSPI and/or VSPI peripheral as a full-duplex SPI slave. It can send/receive transactions within 64 bytes, or make use of DMA to send/receive transactions longer than that. However, there are some known issues when the DMA is enabled.

Terminology

The spi_slave driver uses the following terms:

- Host: The SPI peripheral inside the ESP32 initiating the SPI transmissions. One of HSPI or VSPI.
- Bus: The SPI bus, common to all SPI devices connected to a master. In general the bus consists of the miso, mosi, sclk and optionally quadwp and quadhd signals. The SPI slaves are connected to these signals in parallel. Each SPI slave is also connected to one CS signal.
  - miso - Also known as q, this is the output of the serial stream from the ESP32 to the SPI master
  - mosi - Also known as d, this is the output of the serial stream from the SPI master to the ESP32
  - sclk - Clock signal. Each data bit is clocked out or in on the positive or negative edge of this signal
  - cs - Chip Select. An active Chip Select delineates a single transaction to/from a slave.

- Transaction: One instance of CS going active, data transfer from and to a master happening, and CS going inactive again. Transactions are atomic, as in they will never be interrupted by another transaction.

SPI transactions

A full-duplex SPI transaction starts with the master pulling CS low. After this happens, the master starts sending out clock pulses on the CLK line: every clock pulse causes a data bit to be shifted from the master to the slave on the MOSI line and vice versa on the MISO line. At the end of the transaction, the master makes CS high again.

注解: The SPI slave peripheral relies on the control of software very much. The master shouldn't start a transaction when the slave hasn't prepared for it. Using one more GPIO as the handshake signal to sync is a good idea. For more details, see *Transaction interval*.

GPIO matrix and IOMUX

Most peripheral signals in ESP32 can connect directly to a specific GPIO, which is called its IOMUX pin. When a peripheral signal is routed to a pin other than its IOMUX pin, ESP32 uses the less direct GPIO matrix to make this connection.

If the driver is configured with all SPI signals set to their specific IOMUX pins (or left unconnected), it will bypass the GPIO matrix. If any SPI signal is configured to a pin other than its IOMUx pin, the driver will automatically route all the signals via the GPIO Matrix. The GPIO matrix samples all signals at 80MHz and sends them between the GPIO and the peripheral.

When the GPIO matrix is used, setup time of MISO is more easily violated, since the output delay of MISO signal is increased.

注解: More details about influence of output delay on the maximum clock frequency, see *Timing considerations* below.

IOMUX pins for SPI controllers are as below:

Pin Name	HSPI	VSPI
	GPIO Number	
CS0*	15	5
SCLK	14	18
MISO	12	19
MOSI	13	23
QUADWP	2	22
QUADHD	4	21

note * Only the first device attaching to the bus can use CS0 pin.

Using the spi_slave driver

- Initialize a SPI peripheral as a slave by calling `spi_slave_initialize`. Make sure to set the correct IO pins in the `bus_config` struct. Take care to set signals that are not needed to -1. A DMA channel (either 1 or 2) must be given if transactions will be larger than 32 bytes, if not the dma_chan parameter may be 0.
- To set up a transaction, fill one or more spi_transaction_t structure with any transaction parameters you need. Either queue all transactions by calling `spi_slave_queue_trans`, later quering the result using `spi_slave_get_trans_result`, or handle all requests synchroneously by feeding them into `spi_slave_transmit`. The latter two functions will block until the master has initiated and finished a transaction, causing the queued data to be sent and received.
- Optional: to unload the SPI slave driver, call `spi_slave_free`.

Transaction data and master/slave length mismatches

Normally, data to be transferred to or from a device will be read from or written to a chunk of memory indicated by the `rx_buffer` and `tx_buffer` members of the transaction structure. The SPI driver may decide to use DMA for transfers, so these buffers should be allocated in DMA-capable memory using `pvPortMallocCaps(size, MALLOC_CAP_DMA)`.

The amount of data written to the buffers is limited by the `length` member of the transaction structure: the driver will never read/write more data than indicated there. The `length` cannot define the actual length of the SPI transaction; this is determined by the master as it drives the clock and CS lines. The actual length transferred can be read from the `trans_len` member of the `spi_slave_transaction_t` structure after transaction. In case the length of the transmission is larger than the buffer length, only the start of the transmission will be sent and received, and the `trans_len` is set to `length` instead of the actual length. It' s recommended to set `length` longer than the maximum length expected if the `trans_len` is required. In case the transmission length is shorter than the buffer length, only data up to the length of the buffer will be exchanged.

Warning: Due to a design peculiarity in the ESP32, if the amount of bytes sent by the master or the length of the transmission queues in the slave driver, in bytes, is not both larger than eight and dividable by four, the SPI hardware can fail to write the last one to seven bytes to the receive buffer.

Speed and Timing considerations

Transaction interval

The SPI slave is designed as s general purpose device controlled by the CPU. Different from dedicated devices, CPU-based SPI slave doesn't have too much pre-defined registers. All transactions should be triggered by the CPU, which means the response speed would not be real-time, and there'll always be noticeable intervals between transfers.

During the transaction intervals, the device is not prepared for transactions, the response is not meaningful at all. It is suggested to use *spi_slave_queue_trans()* with *spi_slave_get_trans_result()* to shorten the interval to half the case when using *spi_slave_transmit()*.

The master should always wait for the slave to be ready to start new transactions. Suggested way is to use a gpio by the slave to indicate whether it's ready. The example is in peripherals/spi_slave.

SCLK frequency requirement

The spi slave is designed to work under 10MHz or lower. The clock and data cannot be recognized or received correctly if the clock is too fast or doesn't have a 50% duty cycle.

Moreover, there are more requirements if the data meets the timing requirement:

- **Read (MOSI):** Given that the MOSI is valid right at the launch edge, the slave can read data correctly. Luckily, it's usually the case for most masters.
- **Write (MISO):** To meet the requirement that MISO is stable before the next latch edge of SPI clock, the output delay of MISO signal should be shorter than half a clock. The output delay and frequency limitation (given that the clock is balanced) of different cases are as below :

	Output delay of MISO (ns)	Freq. limit (MHZ)
IOMUX	43.75	<11.4
GPIO matrix	68.75	<7.2

Note:

1. Random error will happen if the frequency exactly equals the limitation
2. The clock uncertainty between master and slave (12.5ns) is included.
3. The output delay is measured under ideal case (free of load). When the loading of MISO pin is too heavy, the output delay will be longer, and the maximum allowed frequency

will be lower.

There is an exceptions: The frequency is allowed to be higher if the master has more toleration for the MISO setup time, e.g. latch data at the next edge than expected, or configurable latching time.

Restrictions and Known issues

1. If the DMA is enabled, the rx buffer should be WORD aligned, i.e. Start from the boundary of 32-bit and have length of multiples of 4 bytes. Or the DMA may write incorrectly or out of the boundary.The driver will check for this.

   Also, master should write lengths which are a multiple of 4 bytes. Data longer than that will be discarded.

2. Furthurmore, the DMA requires a spi mode 1/3 timing. When using spi mode 0/2, the MISO signal has to output half a clock earlier to meet the timing. The new timing is as below:

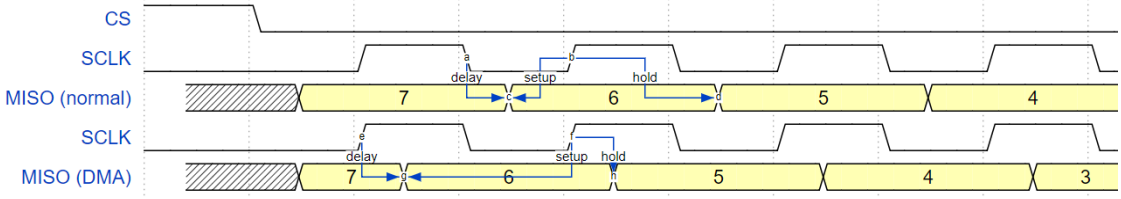

   The hold time after the latch edge is 68.75ns (when GPIO matrix is bypassed), no longer half a SPI clock. The master should sample immediately at the latch edge, or communicate in mode 1/3. Or just initial the spi slave without DMA.

Application Example

Slave/master communication: peripherals/spi_slave.

API Reference

Header File

- driver/include/driver/spi_slave.h

Functions

esp_err_t **spi_slave_initialize**(*spi_host_device_t host*, **const** *spi_bus_config_t *bus_config*, **const** *spi_slave_interface_config_t *slave_config*, int *dma_chan*)

Initialize a SPI bus as a slave interface.

Warning For now, only supports HSPI and VSPI.

Warning If a DMA channel is selected, any transmit and receive buffer used should be allocated in DMA-capable memory.

Warning The ISR of SPI is always executed on the core which calls this function. Never starve the ISR on this core or the SPI transactions will not be handled.

Return

- ESP_ERR_INVALID_ARG if configuration is invalid
- ESP_ERR_INVALID_STATE if host already is in use
- ESP_ERR_NO_MEM if out of memory
- ESP_OK on success

Parameters

- `host`: SPI peripheral to use as a SPI slave interface
- `bus_config`: Pointer to a *spi_bus_config_t* struct specifying how the host should be initialized
- `slave_config`: Pointer to a *spi_slave_interface_config_t* struct specifying the details for the slave interface
- `dma_chan`: Either 1 or 2. A SPI bus used by this driver must have a DMA channel associated with it. The SPI hardware has two DMA channels to share. This parameter indicates which one to use.

esp_err_t **spi_slave_free**(*spi_host_device_t host*)

Free a SPI bus claimed as a SPI slave interface.

Return

- ESP_ERR_INVALID_ARG if parameter is invalid
- ESP_ERR_INVALID_STATE if not all devices on the bus are freed
- ESP_OK on success

Parameters

- `host`: SPI peripheral to free

esp_err_t **spi_slave_queue_trans**(*spi_host_device_t host*, **const** *spi_slave_transaction_t* **trans_desc*, TickType_t *ticks_to_wait*)

Queue a SPI transaction for execution.

Queues a SPI transaction to be executed by this slave device. (The transaction queue size was specified when the slave device was initialised via spi_slave_initialize.) This function may block if the queue is full (depending on the ticks_to_wait parameter). No SPI operation is directly initiated by this

function, the next queued transaction will happen when the master initiates a SPI transaction by pulling down CS and sending out clock signals.

This function hands over ownership of the buffers in `trans_desc` to the SPI slave driver; the application is not to access this memory until `spi_slave_queue_trans` is called to hand ownership back to the application.

Return

- ESP_ERR_INVALID_ARG if parameter is invalid
- ESP_OK on success

Parameters

- `host`: SPI peripheral that is acting as a slave
- `trans_desc`: Description of transaction to execute. Not const because we may want to write status back into the transaction description.
- `ticks_to_wait`: Ticks to wait until there' s room in the queue; use portMAX_DELAY to never time out.

esp_err_t **spi_slave_get_trans_result**(*spi_host_device_t host*, *spi_slave_transaction_t* ***trans_desc*, TickType_t *ticks_to_wait*)

Get the result of a SPI transaction queued earlier.

This routine will wait until a transaction to the given device (queued earlier with spi_slave_queue_trans) has succesfully completed. It will then return the description of the completed transaction so software can inspect the result and e.g. free the memory or re-use the buffers.

It is mandatory to eventually use this function for any transaction queued by `spi_slave_queue_trans`.

Return

- ESP_ERR_INVALID_ARG if parameter is invalid
- ESP_OK on success

Parameters

- `host`: SPI peripheral to that is acting as a slave
- `trans_desc`: Pointer to variable able to contain a pointer to the description of the transaction that is executed
- `ticks_to_wait`: Ticks to wait until there' s a returned item; use portMAX_DELAY to never time out.

esp_err_t **spi_slave_transmit**(*spi_host_device_t host*, *spi_slave_transaction_t* **trans_desc*, TickType_t *ticks_to_wait*)

Do a SPI transaction.

Essentially does the same as spi_slave_queue_trans followed by spi_slave_get_trans_result. Do not use this when there is still a transaction queued that hasn't been finalized using spi_slave_get_trans_result.

Return

- ESP_ERR_INVALID_ARG if parameter is invalid
- ESP_OK on success

Parameters

- `host`: SPI peripheral to that is acting as a slave
- `trans_desc`: Pointer to variable able to contain a pointer to the description of the transaction that is executed. Not const because we may want to write status back into the transaction description.
- `ticks_to_wait`: Ticks to wait until there's a returned item; use portMAX_DELAY to never time out.

Structures

struct spi_slave_interface_config_t

This is a configuration for a SPI host acting as a slave device.

Public Members

int **spics_io_num**

CS GPIO pin for this device.

uint32_t **flags**

Bitwise OR of SPI_SLAVE_* flags.

int **queue_size**

Transaction queue size. This sets how many transactions can be 'in the air' (queued using spi_slave_queue_trans but not yet finished using spi_slave_get_trans_result) at the same time.

uint8_t **mode**

SPI mode (0-3)

slave_transaction_cb_t **post_setup_cb**

Callback called after the SPI registers are loaded with new data.

This callback is called within interrupt context should be in IRAM for best performance, see "Transferring Speed" section in the SPI Master documentation for full details. If not, the callback may crash during flash operation when the driver is initialized with ESP_INTR_FLAG_IRAM.

slave_transaction_cb_t **post_trans_cb**

Callback called after a transaction is done.

This callback is called within interrupt context should be in IRAM for best performance, see "Transferring Speed" section in the SPI Master documentation for full details. If not, the callback may crash during flash operation when the driver is initialized with ESP_INTR_FLAG_IRAM.

struct spi_slave_transaction_t

This structure describes one SPI transaction

Public Members

size_t **length**

Total data length, in bits.

size_t **trans_len**

Transaction data length, in bits.

const void ***tx_buffer**

Pointer to transmit buffer, or NULL for no MOSI phase.

void ***rx_buffer**

Pointer to receive buffer, or NULL for no MISO phase. When the DMA is anabled, must start at WORD boundary (`rx_buffer%4==0`), and has length of a multiple of 4 bytes.

void ***user**

User-defined variable. Can be used to store eg transaction ID.

Macros

SPI_SLAVE_TXBIT_LSBFIRST

Transmit command/address/data LSB first instead of the default MSB first.

SPI_SLAVE_RXBIT_LSBFIRST

Receive data LSB first instead of the default MSB first.

SPI_SLAVE_BIT_LSBFIRST

Transmit and receive LSB first.

Type Definitions

typedef struct *spi_slave_transaction_t* **spi_slave_transaction_t**

typedef void (***slave_transaction_cb_t**)(*spi_slave_transaction_t* *trans)

3.3.17 TIMER

Introduction

The ESP32 chip contains two hardware timer groups. Each group has two general-purpose hardware timers. They are all 64-bit generic timers based on 16-bit prescalers and 64-bit auto-reload-capable up / down counters.

Functional Overview

Typical steps to configure an operate the timer are described in the following sections:

- *Timer Initialization* - what parameters should be set up to get the timer working and what specific functionality is provided depending on the set up.
- *Timer Control* - how to read the timer' s value, pause / start the timer, and change how it operates.
- *Alarms* - setting and using alarms.
- *Interrupts*- how to enable and use interrupts.

Timer Initialization

The two timer groups on-board of the ESP32 are identified using *timer_group_t*. Individual timers in a group are identified with *timer_idx_t*. The two groups, each having two timers, provide the total of four individual timers to our disposal.

Before starting the timer, it should be initialized by calling *timer_init()*. This function should be provided with a structure *timer_config_t* to define how timer should operate. In particular the following timer' s parameters may be set:

- **Divider**: How quickly the timer' s counter is "ticking". This depends on the setting of `divider`, that will be used as divisor of the incoming 80 MHz APB_CLK clock.
- **Mode**: If the the counter is incrementing or decrementing, defined using `counter_dir` by selecting one of values from *timer_count_dir_t*.
- **Counter Enable**: If the counter is enabled, then it will start incrementing / decrementing immediately after calling *timer_init()*. This action is set using `counter_en` by selecting one of vales from *timer_start_t*.
- **Alarm Enable**: Determined by the setting of `alarm_en`.
- **Auto Reload**: Whether the counter should `auto_reload` a specific initial value on the timer' s alarm, or continue incrementing or decrementing.
- **Interrupt Type**: Whether an interrupt is triggered on timer' s alarm. Set the value defined in *timer_intr_mode_t*.

To get the current values of the timers settings, use function *timer_get_config()*.

Timer Control

Once the timer is configured and enabled, it is already "ticking". To check it's current value call *timer_get_counter_value()* or *timer_get_counter_time_sec()*. To set the timer to specific starting value call *timer_set_counter_value()*.

The timer may be paused at any time by calling *timer_pause()*. To start it again call *timer_start()*.

To change how the timer operates you can call once more *timer_init()* described in section *Timer Initialization*. Another option is to use dedicated functions to change individual settings:

- **Divider** value - *timer_set_divider()*. **Note:** the timer should be paused when changing the divider to avoid unpredictable results. If the timer is already running, *timer_set_divider()* will first pause the timer, change the divider, and finally start the timer again.
- **Mode** (whether the counter incrementing or decrementing) - *timer_set_counter_mode()*
- **Auto Reload** counter on alarm - *timer_set_auto_reload()*

Alarms

To set an alarm, call function *timer_set_alarm_value()* and then enable it with *timer_set_alarm()*. The alarm may be also enabled during the timer initialization stage, when *timer_init()* is called.

After the alarm is enabled and the timer reaches the alarm value, depending on configuration, the following two actions may happen:

- An interrupt will be triggered, if previously configured. See section *Interrupts* how to configure interrupts.
- When `auto_reload` is enabled, the timer's counter will be reloaded to start counting from specific initial value. The value to start should be set in advance with *timer_set_counter_value()*.

注解:

- The alarm will be triggered immediately, if an alarm value is set and the timer has already passed this value.
- Once triggered the alarm will be disabled automatically and needs to be re-armed to trigger again.

To check what alarm value has been set up, call *timer_get_alarm_value()*.

Interrupts

Registration of the interrupt handler for a specific timer group and timer is done be calling *timer_isr_register()*.

To enable interrupts for a timer group call *timer_group_intr_enable()*. To do it for a specific timer, call *timer_enable_intr()*. Disabling of interrupts is done with corresponding functions *timer_group_intr_disable()* and *timer_disable_intr()*.

When servicing an interrupt within an ISR, the interrupt need to explicitly cleared. To do so, set the `TIMERGN.int_clr_timers.tM` structure defined in soc/esp32/include/soc/timer_group_struct.h, where N is the timer group number [0, 1] and M is the timer number [0, 1]. For example to clear an interrupt for the timer 1 in the timer group 0, call the following:

```
TIMERG0.int_clr_timers.t1 = 1
```

See the application example below how to use interrupts.

Application Example

The 64-bit hardware timer example: peripherals/timer_group.

API Reference

Header File

- driver/include/driver/timer.h

Functions

esp_err_t **timer_get_counter_value**(*timer_group_t group_num*, *timer_idx_t timer_num*, uint64_t **timer_val*)

Read the counter value of hardware timer.

Return

- ESP_OK Success
- ESP_ERR_INVALID_ARG Parameter error

Parameters

- `group_num`: Timer group, 0 for TIMERG0 or 1 for TIMERG1
- `timer_num`: Timer index, 0 for hw_timer[0] & 1 for hw_timer[1]
- `timer_val`: Pointer to accept timer counter value.

esp_err_t **timer_get_counter_time_sec**(*timer_group_t group_num*, *timer_idx_t timer_num*, double *time)

Read the counter value of hardware timer, in unit of a given scale.

Return

- ESP_OK Success
- ESP_ERR_INVALID_ARG Parameter error

Parameters

- `group_num`: Timer group, 0 for TIMERG0 or 1 for TIMERG1
- `timer_num`: Timer index, 0 for hw_timer[0] & 1 for hw_timer[1]
- `time`: Pointer, type of double*, to accept timer counter value, in seconds.

esp_err_t **timer_set_counter_value**(*timer_group_t group_num*, *timer_idx_t timer_num*, uint64_t *load_val*)

Set counter value to hardware timer.

Return

- ESP_OK Success
- ESP_ERR_INVALID_ARG Parameter error

Parameters

- `group_num`: Timer group, 0 for TIMERG0 or 1 for TIMERG1
- `timer_num`: Timer index, 0 for hw_timer[0] & 1 for hw_timer[1]
- `load_val`: Counter value to write to the hardware timer.

esp_err_t **timer_start**(*timer_group_t group_num*, *timer_idx_t timer_num*)

Start the counter of hardware timer.

Return

- ESP_OK Success
- ESP_ERR_INVALID_ARG Parameter error

Parameters

- `group_num`: Timer group number, 0 for TIMERG0 or 1 for TIMERG1
- `timer_num`: Timer index, 0 for hw_timer[0] & 1 for hw_timer[1]

esp_err_t **timer_pause**(*timer_group_t group_num*, *timer_idx_t timer_num*)

Pause the counter of hardware timer.

Return

- ESP_OK Success
- ESP_ERR_INVALID_ARG Parameter error

Parameters

- `group_num`: Timer group number, 0 for TIMERG0 or 1 for TIMERG1
- `timer_num`: Timer index, 0 for hw_timer[0] & 1 for hw_timer[1]

esp_err_t **timer_set_counter_mode**(*timer_group_t group_num*, *timer_idx_t timer_num*, *timer_count_dir_t counter_dir*)

Set counting mode for hardware timer.

Return

- ESP_OK Success
- ESP_ERR_INVALID_ARG Parameter error

Parameters

- `group_num`: Timer group number, 0 for TIMERG0 or 1 for TIMERG1
- `timer_num`: Timer index, 0 for hw_timer[0] & 1 for hw_timer[1]
- `counter_dir`: Counting direction of timer, count-up or count-down

esp_err_t **timer_set_auto_reload**(*timer_group_t group_num*, *timer_idx_t timer_num*, *timer_autoreload_t reload*)

Enable or disable counter reload function when alarm event occurs.

Return

- ESP_OK Success
- ESP_ERR_INVALID_ARG Parameter error

Parameters

- `group_num`: Timer group number, 0 for TIMERG0 or 1 for TIMERG1
- `timer_num`: Timer index, 0 for hw_timer[0] & 1 for hw_timer[1]
- `reload`: Counter reload mode.

esp_err_t **timer_set_divider**(*timer_group_t group_num*, *timer_idx_t timer_num*, uint32_t *divider*)

Set hardware timer source clock divider. Timer groups clock are divider from APB clock.

Return

- ESP_OK Success

- ESP_ERR_INVALID_ARG Parameter error

Parameters

- `group_num`: Timer group number, 0 for TIMERG0 or 1 for TIMERG1
- `timer_num`: Timer index, 0 for hw_timer[0] & 1 for hw_timer[1]
- `divider`: Timer clock divider value. The divider's range is from from 2 to 65536.

esp_err_t **timer_set_alarm_value**(*timer_group_t group_num*, *timer_idx_t timer_num*, uint64_t *alarm_value*)

Set timer alarm value.

Return

- ESP_OK Success
- ESP_ERR_INVALID_ARG Parameter error

Parameters

- `group_num`: Timer group, 0 for TIMERG0 or 1 for TIMERG1
- `timer_num`: Timer index, 0 for hw_timer[0] & 1 for hw_timer[1]
- `alarm_value`: A 64-bit value to set the alarm value.

esp_err_t **timer_get_alarm_value**(*timer_group_t group_num*, *timer_idx_t timer_num*, uint64_t **alarm_value*)

Get timer alarm value.

Return

- ESP_OK Success
- ESP_ERR_INVALID_ARG Parameter error

Parameters

- `group_num`: Timer group, 0 for TIMERG0 or 1 for TIMERG1
- `timer_num`: Timer index, 0 for hw_timer[0] & 1 for hw_timer[1]
- `alarm_value`: Pointer of A 64-bit value to accept the alarm value.

esp_err_t **timer_set_alarm**(*timer_group_t group_num*, *timer_idx_t timer_num*, *timer_alarm_t alarm_en*)

Enable or disable generation of timer alarm events.

Return

- ESP_OK Success
- ESP_ERR_INVALID_ARG Parameter error

Parameters

- `group_num`: Timer group, 0 for TIMERG0 or 1 for TIMERG1
- `timer_num`: Timer index, 0 for hw_timer[0] & 1 for hw_timer[1]
- `alarm_en`: To enable or disable timer alarm function.

esp_err_t **timer_isr_register**(*timer_group_t group_num*, *timer_idx_t timer_num*, void (**fn*)(void *), void **arg*, int *intr_alloc_flags*, *timer_isr_handle_t* **handle*)

Register Timer interrupt handler, the handler is an ISR. The handler will be attached to the same CPU core that this function is running on.

Note If the intr_alloc_flags value ESP_INTR_FLAG_IRAM is set, the handler function must be declared with IRAM_ATTR attribute and can only call functions in IRAM or ROM. It cannot call other timer APIs. Use direct register access to configure timers from inside the ISR in this case.

Return

- ESP_OK Success
- ESP_ERR_INVALID_ARG Parameter error

Parameters

- `group_num`: Timer group number
- `timer_num`: Timer index of timer group
- `fn`: Interrupt handler function.
- `arg`: Parameter for handler function
- `intr_alloc_flags`: Flags used to allocate the interrupt. One or multiple (ORred) ESP_INTR_FLAG_* values. See esp_intr_alloc.h for more info.
- `handle`: Pointer to return handle. If non-NULL, a handle for the interrupt will be returned here.

esp_err_t **timer_init**(*timer_group_t group_num*, *timer_idx_t timer_num*, **const** *timer_config_t* **config*)

Initializes and configure the timer.

Return

- ESP_OK Success
- ESP_ERR_INVALID_ARG Parameter error

Parameters

- `group_num`: Timer group number, 0 for TIMERG0 or 1 for TIMERG1

- `timer_num`: Timer index, 0 for hw_timer[0] & 1 for hw_timer[1]
- `config`: Pointer to timer initialization parameters.

esp_err_t **timer_get_config**(*timer_group_t group_num*, *timer_idx_t timer_num*, *timer_config_t *config*)

Get timer configure value.

Return

- ESP_OK Success
- ESP_ERR_INVALID_ARG Parameter error

Parameters

- `group_num`: Timer group number, 0 for TIMERG0 or 1 for TIMERG1
- `timer_num`: Timer index, 0 for hw_timer[0] & 1 for hw_timer[1]
- `config`: Pointer of struct to accept timer parameters.

esp_err_t **timer_group_intr_enable**(*timer_group_t group_num*, uint32_t *en_mask*)

Enable timer group interrupt, by enable mask.

Return

- ESP_OK Success
- ESP_ERR_INVALID_ARG Parameter error

Parameters

- `group_num`: Timer group number, 0 for TIMERG0 or 1 for TIMERG1
- `en_mask`: Timer interrupt enable mask. Use TIMG_T0_INT_ENA_M to enable t0 interrupt Use TIMG_T1_INT_ENA_M to enable t1 interrupt

esp_err_t **timer_group_intr_disable**(*timer_group_t group_num*, uint32_t *disable_mask*)

Disable timer group interrupt, by disable mask.

Return

- ESP_OK Success
- ESP_ERR_INVALID_ARG Parameter error

Parameters

- `group_num`: Timer group number, 0 for TIMERG0 or 1 for TIMERG1
- `disable_mask`: Timer interrupt disable mask. Use TIMG_T0_INT_ENA_M to disable t0 interrupt Use TIMG_T1_INT_ENA_M to disable t1 interrupt

esp_err_t **timer_enable_intr**(*timer_group_t group_num*, *timer_idx_t timer_num*)

Enable timer interrupt.

Return

- ESP_OK Success
- ESP_ERR_INVALID_ARG Parameter error

Parameters

- **group_num**: Timer group number, 0 for TIMERG0 or 1 for TIMERG1
- **timer_num**: Timer index.

esp_err_t **timer_disable_intr**(*timer_group_t group_num*, *timer_idx_t timer_num*)

Disable timer interrupt.

Return

- ESP_OK Success
- ESP_ERR_INVALID_ARG Parameter error

Parameters

- **group_num**: Timer group number, 0 for TIMERG0 or 1 for TIMERG1
- **timer_num**: Timer index.

Structures

struct timer_config_t

Data structure with timer' s configuration settings.

Public Members

bool **alarm_en**

Timer alarm enable

bool **counter_en**

Counter enable

timer_intr_mode_t **intr_type**

Interrupt mode

timer_count_dir_t **counter_dir**

Counter direction

bool **auto_reload**

Timer auto-reload

uint32_t **divider**

Counter clock divider. The divider' s range is from from 2 to 65536.

Macros

TIMER_BASE_CLK

Frequency of the clock on the input of the timer groups

Type Definitions

typedef *intr_handle_t* **timer_isr_handle_t**

Interrupt handle, used in order to free the isr after use. Aliases to an int handle for now.

Enumerations

enum timer_group_t

Selects a Timer-Group out of 2 available groups.

Values:

TIMER_GROUP_0 = 0

Hw timer group 0

TIMER_GROUP_1 = 1

Hw timer group 1

TIMER_GROUP_MAX

enum timer_idx_t

Select a hardware timer from timer groups.

Values:

TIMER_0 = 0

Select timer0 of GROUPx

TIMER_1 = 1

Select timer1 of GROUPx

TIMER_MAX

enum timer_count_dir_t

Decides the direction of counter.

Values:

TIMER_COUNT_DOWN = 0

Descending Count from cnt.high|cnt.low

TIMER_COUNT_UP = 1

Ascending Count from Zero

TIMER_COUNT_MAX

enum timer_start_t

Decides whether timer is on or paused.

Values:

TIMER_PAUSE = 0

Pause timer counter

TIMER_START = 1

Start timer counter

enum timer_alarm_t

Decides whether to enable alarm mode.

Values:

TIMER_ALARM_DIS = 0

Disable timer alarm

TIMER_ALARM_EN = 1

Enable timer alarm

TIMER_ALARM_MAX

enum timer_intr_mode_t

Select interrupt type if running in alarm mode.

Values:

TIMER_INTR_LEVEL = 0

Interrupt mode: level mode

TIMER_INTR_MAX

enum timer_autoreload_t

Select if Alarm needs to be loaded by software or automatically reload by hardware.

Values:

TIMER_AUTORELOAD_DIS = 0

Disable auto-reload: hardware will not load counter value after an alarm event

TIMER_AUTORELOAD_EN = 1

Enable auto-reload: hardware will load counter value after an alarm event

TIMER_AUTORELOAD_MAX

3.3.18 Touch Sensor

Introduction

A touch-sensor system is built on a substrate which carries electrodes and relevant connections under a protective flat surface. When a user touches the surface, the capacitance variation is triggered and a binary signal is generated to indicate whether the touch is valid.

ESP32 can provide up to 10 capacitive touch pads / GPIOs. The sensing pads can be arranged in different combinations (e.g. matrix, slider), so that a larger area or more points can be detected. The touch pad sensing process is under the control of a hardware-implemented finite-state machine (FSM) which is initiated by software or a dedicated hardware timer.

Design, operation and control registers of touch sensor are discussed in ESP32 Technical Reference Manual (PDF). Please refer to it for additional details how this subsystem works.

In depth details of design of touch sensors and firmware development guidelines for the ESP32 are available in Touch Sensor Application Note. If you would like to test touch sensors in various configurations without building them on your own, check Guide for ESP32-Sense Development Kit.

Functionality Overview

Description of API is broken down into groups of functions to provide quick overview of features like:

- Initialization of touch pad driver
- Configuration of touch pad GPIO pins
- Taking measurements
- Adjusting parameters of measurements
- Filtering measurements
- Touch detection methods
- Setting up interrupts to report touch detection
- Waking up from sleep mode on interrupt

For detailed description of particular function please go to section *API Reference*. Practical implementation of this API is covered in section *Application Examples*.

Initialization

Touch pad driver should be initialized before use by calling function *touch_pad_init()*. This function sets several `.._DEFAULT` driver parameters listed in *API Reference* under "Macros" . It also clears information what pads have been touched before (if any) and disables interrupts.

If not required anymore, driver can be disabled by calling *touch_pad_deinit()*.

Configuration

Enabling of touch sensor functionality for particular GPIO is done with *touch_pad_config()*.

The function *touch_pad_set_fsm_mode()* is used to select whether touch pad measurement (operated by FSM) is started automatically by hardware timer, or by software. If software mode is selected, then use *touch_pad_sw_start()* to start of the FSM.

Touch State Measurements

The following two functions come handy to read raw or filtered measurements from the sensor:

- *touch_pad_read()*
- *touch_pad_read_filtered()*

They may be used to characterize particular touch pad design by checking the range of sensor readings when a pad is touched or released. This information can be then used to establish the touch threshold.

注解: Start and configure filter before using *touch_pad_read_filtered()* by calling specific filter functions described down below.

To see how to use both read functions check peripherals/touch_pad_read application example.

Optimization of Measurements

Touch sensor has several configurable parameters to match characteristics of particular touch pad design. For instance, to sense smaller capacity changes, it is possible to narrow the reference voltage range within which the touch pads are charged / discharged. The high and low reference voltages are set using function *touch_pad_set_voltage()*. A positive side effect, besides ability to discern smaller capacity changes, will be reduction of power consumption for low power applications. A likely negative effect will be increase of measurement noise. If dynamic rage of obtained readings is still satisfactory, then further reduction of power consumption may be done by lowering the measurement time with *touch_pad_set_meas_time()*.

The following summarizes available measurement parameters and corresponding 'set' functions:

- Touch pad charge / discharge parameters:
  - voltage range: *touch_pad_set_voltage()*
  - speed (slope): *touch_pad_set_cnt_mode()*
- Measure time: *touch_pad_set_meas_time()*

Relationship between voltage range (high / low reference voltages), speed (slope) and measure time is shown on figure below.

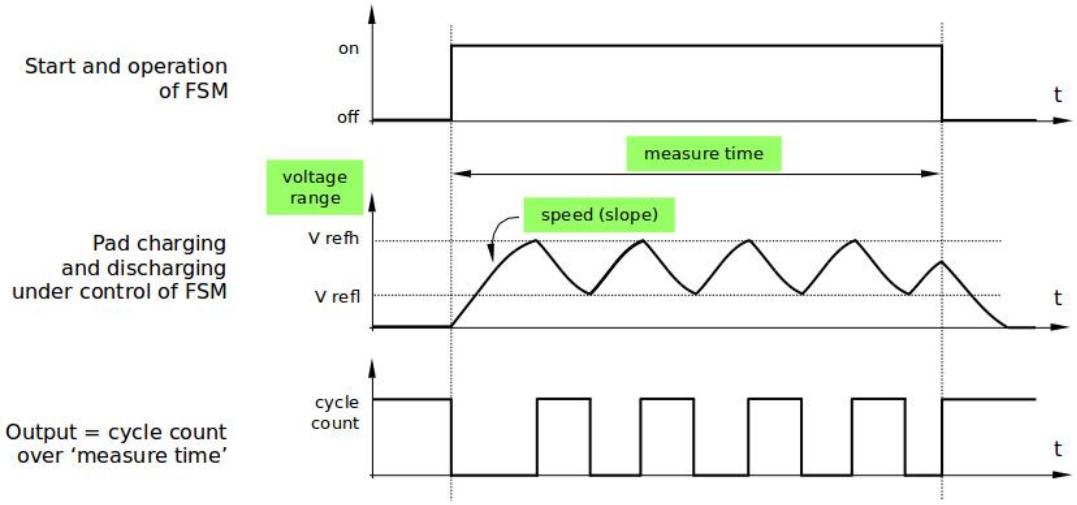

图 22: Touch Pad - relationship between measurement parameters

The last chart "Output" represents the touch sensor reading, i.e. the count of pulses collected within measure time.

All functions are provided in pairs to 'set' specific parameter and to 'get' the current parameter's value, e.g. *touch_pad_set_voltage()* and *touch_pad_get_voltage()*.

Filtering of Measurements

If measurements are noisy, you may filter them with provided API. The filter should be started before first use by calling *touch_pad_filter_start()*.

The filter type is IIR (Infinite Impulse Response) and it has configurable period that can be set with function *touch_pad_set_filter_period()*.

You can stop the filter with *touch_pad_filter_stop()*. If not required anymore, the filter may be deleted by invoking *touch_pad_filter_delete()*.

Touch Detection

Touch detection is implemented in ESP32's hardware basing on user configured threshold and raw measurements executed by FSM. Use function *touch_pad_get_status()* to check what pads have been touched and *touch_pad_clear_status()* to clear the touch status information.

Hardware touch detection may be also wired to interrupts and this is described in next section.

If measurements are noisy and capacity changes small, then hardware touch detection may be not reliable. To resolve this issue, instead of using hardware detection / provided interrupts, implement measurement filtering and perform touch detection in your own application. See peripherals/touch_pad_interrupt for sample implementation of both methods of touch detection.

Touch Triggered Interrupts

Before enabling an interrupt on touch detection, user should establish touch detection threshold. Use functions described above to read and display sensor measurements when pad is touched and released. Apply a filter when measurements are noisy and relative changes are small. Depending on your application and environmental conditions, test the influence of temperature and power supply voltage changes on measured values.

Once detection threshold is established, it may be set on initialization with *touch_pad_config()* or at the runtime with *touch_pad_set_thresh()*.

In next step configure how interrupts are triggered. They may be triggered below or above threshold and this is set with function *touch_pad_set_trigger_mode()*.

Finally configure and manage interrupt calls using the following functions:

- *touch_pad_isr_register()* / *touch_pad_isr_deregister()*
- *touch_pad_intr_enable()* / *touch_pad_intr_disable()*

When interrupts are operational, you can obtain information what particular pad triggered interrupt by invoking *touch_pad_get_status()* and clear pad status with *touch_pad_clear_status()*.

注解: Interrupts on touch detection operate on raw / unfiltered measurements checked against user established threshold and are implemented in hardware. Enabling software filtering API (see *Filtering of Measurements*) does not affect this process.

Wakeup from Sleep Mode

If touch pad interrupts are used to wakeup the chip from a sleep mode, then user can select certain configuration of pads (SET1 or both SET1 and SET2), that should be touched to trigger the interrupt and cause subsequent wakeup. To do so, use function *touch_pad_set_trigger_source()*.

Configuration of required bit patterns of pads may be managed for each 'SET' with:

- *touch_pad_set_group_mask()* / *touch_pad_get_group_mask()*
- *touch_pad_clear_group_mask()*

Application Examples

- Touch sensor read example: peripherals/touch_pad_read.
- Touch sensor interrupt example: peripherals/touch_pad_interrupt.

API Reference

Header File

- driver/include/driver/touch_pad.h

Functions

esp_err_t **touch_pad_init()**

Initialize touch module.

Note The default FSM mode is 'TOUCH_FSM_MODE_SW'. If you want to use interrupt trigger mode, then set it using function 'touch_pad_set_fsm_mode' to 'TOUCH_FSM_MODE_TIMER' after calling 'touch_pad_init'.

Return

- ESP_OK Success
- ESP_FAIL Touch pad init error

esp_err_t **touch_pad_deinit()**

Un-install touch pad driver.

Note After this function is called, other touch functions are prohibited from being called.

Return

- ESP_OK Success
- ESP_FAIL Touch pad driver not initialized

esp_err_t **touch_pad_config**(*touch_pad_t touch_num*, uint16_t *threshold*)

Configure touch pad interrupt threshold.

Note If FSM mode is set to TOUCH_FSM_MODE_TIMER, this function will be blocked for one measurement cycle and wait for data to be valid.

Return

- ESP_OK Success
- ESP_ERR_INVALID_ARG if argument wrong

- ESP_FAIL if touch pad not initialized

Parameters

- `touch_num`: touch pad index
- `threshold`: interrupt threshold,

esp_err_t **touch_pad_read**(*touch_pad_t touch_num*, uint16_t **touch_value*)

get touch sensor counter value. Each touch sensor has a counter to count the number of charge/discharge cycles. When the pad is not 'touched', we can get a number of the counter. When the pad is 'touched', the value in counter will get smaller because of the larger equivalent capacitance.

Note This API requests hardware measurement once. If IIR filter mode is enabled, please use 'touch_pad_read_raw_data' interface instead.

Return

- ESP_OK Success
- ESP_ERR_INVALID_ARG Touch pad parameter error
- ESP_ERR_INVALID_STATE This touch pad hardware connection is error, the value of "touch_value" is 0.
- ESP_FAIL Touch pad not initialized

Parameters

- `touch_num`: touch pad index
- `touch_value`: pointer to accept touch sensor value

esp_err_t **touch_pad_read_filtered**(*touch_pad_t touch_num*, uint16_t **touch_value*)

get filtered touch sensor counter value by IIR filter.

Note touch_pad_filter_start has to be called before calling touch_pad_read_filtered. This function can be called from ISR

Return

- ESP_OK Success
- ESP_ERR_INVALID_ARG Touch pad parameter error
- ESP_ERR_INVALID_STATE This touch pad hardware connection is error, the value of "touch_value" is 0.
- ESP_FAIL Touch pad not initialized

Parameters

- `touch_num`: touch pad index

- `touch_value`: pointer to accept touch sensor value

esp_err_t **touch_pad_read_raw_data**(*touch_pad_t touch_num*, uint16_t **touch_value*)

get raw data (touch sensor counter value) from IIR filter process. Need not request hardware measurements.

Note touch_pad_filter_start has to be called before calling touch_pad_read_raw_data. This function can be called from ISR

Return

- ESP_OK Success
- ESP_ERR_INVALID_ARG Touch pad parameter error
- ESP_ERR_INVALID_STATE This touch pad hardware connection is error, the value of "touch_value" is 0.
- ESP_FAIL Touch pad not initialized

Parameters

- `touch_num`: touch pad index
- `touch_value`: pointer to accept touch sensor value

esp_err_t **touch_pad_set_filter_read_cb**(*filter_cb_t read_cb*)

Register the callback function that is called after each IIR filter calculation.

Note The 'read_cb' callback is called in timer task in each filtering cycle.

Return

- ESP_OK Success
- ESP_ERR_INVALID_ARG set error

Parameters

- `read_cb`: Pointer to filtered callback function. If the argument passed in is NULL, the callback will stop.

esp_err_t **touch_pad_isr_handler_register**(void (***fn*))void *

, void ***arg*, int *unused*, *intr_handle_t *handle_unused*Register touch-pad ISR,.

Note Deprecated function, users should replace this with touch_pad_isr_register, because RTC modules share a same interrupt index.

Return

- ESP_OK Success ;
- ESP_ERR_INVALID_ARG GPIO error

- ESP_ERR_NO_MEM No memory

Parameters

- `fn`: Pointer to ISR handler
- `arg`: Parameter for ISR
- `unused`: Reserved, not used
- `handle_unused`: Reserved, not used

esp_err_t **touch_pad_isr_register**(*intr_handler_t fn*, void **arg*)

Register touch-pad ISR. The handler will be attached to the same CPU core that this function is running on.

Return

- ESP_OK Success ;
- ESP_ERR_INVALID_ARG GPIO error
- ESP_ERR_NO_MEM No memory

Parameters

- `fn`: Pointer to ISR handler
- `arg`: Parameter for ISR

esp_err_t **touch_pad_isr_deregister**(void (**fn*))void *
, void **arg*Deregister the handler previously registered using touch_pad_isr_handler_register.

Return

- ESP_OK on success
- ESP_ERR_INVALID_STATE if a handler matching both fn and arg isn't registered

Parameters

- `fn`: handler function to call (as passed to touch_pad_isr_handler_register)
- `arg`: argument of the handler (as passed to touch_pad_isr_handler_register)

esp_err_t **touch_pad_set_meas_time**(uint16_t *sleep_cycle*, uint16_t *meas_cycle*)

Set touch sensor measurement and sleep time.

Return

- ESP_OK on success

Parameters

- `sleep_cycle`: The touch sensor will sleep after each measurement. sleep_cycle decide the interval between each measurement. t_sleep = sleep_cycle / (RTC_SLOW_CLK frequency). The approximate frequency value of RTC_SLOW_CLK can be obtained using rtc_clk_slow_freq_get_hz function.
- `meas_cycle`: The duration of the touch sensor measurement. t_meas = meas_cycle / 8M, the maximum measure time is 0xffff / 8M = 8.19 ms

esp_err_t **touch_pad_get_meas_time**(uint16_t **sleep_cycle*, uint16_t **meas_cycle*)

Get touch sensor measurement and sleep time.

Return

- ESP_OK on success

Parameters

- `sleep_cycle`: Pointer to accept sleep cycle number
- `meas_cycle`: Pointer to accept measurement cycle count.

esp_err_t **touch_pad_set_voltage**(*touch_high_volt_t refh*, *touch_low_volt_t refl*, *touch_volt_atten_t atten*)

Set touch sensor reference voltage, if the voltage gap between high and low reference voltage get less, the charging and discharging time would be faster, accordingly, the counter value would be larger. In the case of detecting very slight change of capacitance, we can narrow down the gap so as to increase the sensitivity. On the other hand, narrow voltage gap would also introduce more noise, but we can use a software filter to pre-process the counter value.

Return

- ESP_OK on success
- ESP_ERR_INVALID_ARG if argument is wrong

Parameters

- `refh`: the value of DREFH
- `refl`: the value of DREFL
- `atten`: the attenuation on DREFH

esp_err_t **touch_pad_get_voltage**(*touch_high_volt_t* **refh*, *touch_low_volt_t* **refl*, *touch_volt_atten_t* **atten*)

Get touch sensor reference voltage,.

Return

- ESP_OK on success

Parameters

- `refh`: pointer to accept DREFH value
- `refl`: pointer to accept DREFL value
- `atten`: pointer to accept the attenuation on DREFH

esp_err_t **touch_pad_set_cnt_mode**(*touch_pad_t touch_num*, *touch_cnt_slope_t slope*, *touch_tie_opt_t opt*)

Set touch sensor charge/discharge speed for each pad. If the slope is 0, the counter would always be zero. If the slope is 1, the charging and discharging would be slow, accordingly, the counter value would be small. If the slope is set 7, which is the maximum value, the charging and discharging would be fast, accordingly, the counter value would be larger.

Return

- ESP_OK on success
- ESP_ERR_INVALID_ARG if argument is wrong

Parameters

- `touch_num`: touch pad index
- `slope`: touch pad charge/discharge speed
- `opt`: the initial voltage

esp_err_t **touch_pad_get_cnt_mode**(*touch_pad_t touch_num*, *touch_cnt_slope_t* **slope*, *touch_tie_opt_t* **opt*)

Get touch sensor charge/discharge speed for each pad.

Return

- ESP_OK on success
- ESP_ERR_INVALID_ARG if argument is wrong

Parameters

- `touch_num`: touch pad index
- `slope`: pointer to accept touch pad charge/discharge slope
- `opt`: pointer to accept the initial voltage

esp_err_t **touch_pad_io_init**(*touch_pad_t touch_num*)

Initialize touch pad GPIO.

Return

- ESP_OK on success
- ESP_ERR_INVALID_ARG if argument is wrong

Parameters

- `touch_num`: touch pad index

esp_err_t **touch_pad_set_fsm_mode**(*touch_fsm_mode_t mode*)

Set touch sensor FSM mode, the test action can be triggered by the timer, as well as by the software.

Return

- ESP_OK on success
- ESP_ERR_INVALID_ARG if argument is wrong

Parameters

- `mode`: FSM mode

esp_err_t **touch_pad_get_fsm_mode**(*touch_fsm_mode_t* **mode*)

Get touch sensor FSM mode.

Return

- ESP_OK on success

Parameters

- `mode`: pointer to accept FSM mode

esp_err_t **touch_pad_sw_start**()

Trigger a touch sensor measurement, only support in SW mode of FSM.

Return

- ESP_OK on success

esp_err_t **touch_pad_set_thresh**(*touch_pad_t touch_num*, uint16_t *threshold*)

Set touch sensor interrupt threshold.

Return

- ESP_OK on success
- ESP_ERR_INVALID_ARG if argument is wrong

Parameters

- `touch_num`: touch pad index
- `threshold`: threshold of touchpad count, refer to touch_pad_set_trigger_mode to see how to set trigger mode.

esp_err_t **touch_pad_get_thresh**(*touch_pad_t touch_num*, uint16_t **threshold*)

Get touch sensor interrupt threshold.

Return

- ESP_OK on success
- ESP_ERR_INVALID_ARG if argument is wrong

Parameters

- `touch_num`: touch pad index
- `threshold`: pointer to accept threshold

esp_err_t **touch_pad_set_trigger_mode**(*touch_trigger_mode_t mode*)

Set touch sensor interrupt trigger mode. Interrupt can be triggered either when counter result is less than threshold or when counter result is more than threshold.

Return

- ESP_OK on success
- ESP_ERR_INVALID_ARG if argument is wrong

Parameters

- `mode`: touch sensor interrupt trigger mode

esp_err_t **touch_pad_get_trigger_mode**(*touch_trigger_mode_t *mode*)

Get touch sensor interrupt trigger mode.

Return

- ESP_OK on success

Parameters

- `mode`: pointer to accept touch sensor interrupt trigger mode

esp_err_t **touch_pad_set_trigger_source**(*touch_trigger_src_t src*)

Set touch sensor interrupt trigger source. There are two sets of touch signals. Set1 and set2 can be mapped to several touch signals. Either set will be triggered if at least one of its touch signal is 'touched' . The interrupt can be configured to be generated if set1 is triggered, or only if both sets are triggered.

Return

- ESP_OK on success
- ESP_ERR_INVALID_ARG if argument is wrong

Parameters

- `src`: touch sensor interrupt trigger source

esp_err_t **touch_pad_get_trigger_source**(*touch_trigger_src_t* **src*)

Get touch sensor interrupt trigger source.

Return

- ESP_OK on success

Parameters

- `src`: pointer to accept touch sensor interrupt trigger source

esp_err_t **touch_pad_set_group_mask**(uint16_t *set1_mask*, uint16_t *set2_mask*, uint16_t *en_mask*)

Set touch sensor group mask. Touch pad module has two sets of signals, 'Touched' signal is triggered only if at least one of touch pad in this group is "touched". This function will set the register bits according to the given bitmask.

Return

- ESP_OK on success
- ESP_ERR_INVALID_ARG if argument is wrong

Parameters

- `set1_mask`: bitmask of touch sensor signal group1, it's a 10-bit value
- `set2_mask`: bitmask of touch sensor signal group2, it's a 10-bit value
- `en_mask`: bitmask of touch sensor work enable, it's a 10-bit value

esp_err_t **touch_pad_get_group_mask**(uint16_t **set1_mask*, uint16_t **set2_mask*, uint16_t **en_mask*)

Get touch sensor group mask.

Return

- ESP_OK on success

Parameters

- `set1_mask`: pointer to accept bitmask of touch sensor signal group1, it's a 10-bit value
- `set2_mask`: pointer to accept bitmask of touch sensor signal group2, it's a 10-bit value
- `en_mask`: pointer to accept bitmask of touch sensor work enable, it's a 10-bit value

esp_err_t **touch_pad_clear_group_mask**(uint16_t *set1_mask*, uint16_t *set2_mask*, uint16_t *en_mask*)

Clear touch sensor group mask. Touch pad module has two sets of signals, Interrupt is triggered only

if at least one of touch pad in this group is "touched". This function will clear the register bits according to the given bitmask.

Return

- ESP_OK on success
- ESP_ERR_INVALID_ARG if argument is wrong

Parameters

- `set1_mask`: bitmask touch sensor signal group1, it's a 10-bit value
- `set2_mask`: bitmask touch sensor signal group2, it's a 10-bit value
- `en_mask`: bitmask of touch sensor work enable, it's a 10-bit value

esp_err_t **touch_pad_clear_status**()

To clear the touch status register, usually use this function in touch ISR to clear status.

Return

- ESP_OK on success

uint32_t **touch_pad_get_status**()

Get the touch sensor status, usually used in ISR to decide which pads are 'touched'.

Return

- touch status

esp_err_t **touch_pad_intr_enable**()

To enable touch pad interrupt.

Return

- ESP_OK on success

esp_err_t **touch_pad_intr_disable**()

To disable touch pad interrupt.

Return

- ESP_OK on success

esp_err_t **touch_pad_set_filter_period**(uint32_t *new_period_ms*)

set touch pad filter calibration period, in ms. Need to call touch_pad_filter_start before all touch filter APIs

Return

- ESP_OK Success
- ESP_ERR_INVALID_STATE driver state error
- ESP_ERR_INVALID_ARG parameter error

Parameters

- `new_period_ms`: filter period, in ms

esp_err_t `touch_pad_get_filter_period`(uint32_t **p_period_ms*)

get touch pad filter calibration period, in ms Need to call touch_pad_filter_start before all touch filter APIs

Return

- ESP_OK Success
- ESP_ERR_INVALID_STATE driver state error
- ESP_ERR_INVALID_ARG parameter error

Parameters

- `p_period_ms`: pointer to accept period

esp_err_t `touch_pad_filter_start`(uint32_t *filter_period_ms*)

start touch pad filter function This API will start a filter to process the noise in order to prevent false triggering when detecting slight change of capacitance. Need to call touch_pad_filter_start before all touch filter APIs

Note This filter uses FreeRTOS timer, which is dispatched from a task with priority 1 by default on CPU 0. So if some application task with higher priority takes a lot of CPU0 time, then the quality of data obtained from this filter will be affected. You can adjust FreeRTOS timer task priority in menuconfig.

Return

- ESP_OK Success
- ESP_ERR_INVALID_ARG parameter error
- ESP_ERR_NO_MEM No memory for driver
- ESP_ERR_INVALID_STATE driver state error

Parameters

- `filter_period_ms`: filter calibration period, in ms

esp_err_t `touch_pad_filter_stop`()

stop touch pad filter function Need to call touch_pad_filter_start before all touch filter APIs

Return

- ESP_OK Success
- ESP_ERR_INVALID_STATE driver state error

esp_err_t **touch_pad_filter_delete**()

delete touch pad filter driver and release the memory Need to call touch_pad_filter_start before all touch filter APIs

Return

- ESP_OK Success
- ESP_ERR_INVALID_STATE driver state error

esp_err_t **touch_pad_get_wakeup_status**(*touch_pad_t* **pad_num*)

Get the touch pad which caused wakeup from sleep.

Return

- ESP_OK Success
- ESP_FAIL get status err

Parameters

- **pad_num**: pointer to touch pad which caused wakeup

Macros

TOUCH_PAD_SLEEP_CYCLE_DEFAULT

The timer frequency is RTC_SLOW_CLK (can be 150k or 32k depending on the options), max value is 0xffff

TOUCH_PAD_MEASURE_CYCLE_DEFAULT

The timer frequency is 8Mhz, the max value is 0x7fff

TOUCH_PAD_MEASURE_WAIT_DEFAULT

The timer frequency is 8Mhz, the max value is 0xff

TOUCH_FSM_MODE_DEFAULT

The touch FSM my be started by the software or timer

TOUCH_TRIGGER_MODE_DEFAULT

Interrupts can be triggered if sensor value gets below or above threshold

TOUCH_TRIGGER_SOURCE_DEFAULT

The wakeup trigger source can be SET1 or both SET1 and SET2

TOUCH_PAD_BIT_MASK_MAX

Type Definitions

typedef *intr_handle_t* **touch_isr_handle_t**

typedef void (***filter_cb_t**)(uint16_t *raw_value, uint16_t *filtered_value)

Callback function that is called after each IIR filter calculation.

Note This callback is called in timer task in each filtering cycle.

Note This callback should not be blocked.

Parameters

- `raw_value`: The latest raw data(touch sensor counter value) that points to all channels(raw_value[0..TOUCH_PAD_MAX-1]).
- `filtered_value`: The latest IIR filtered data(calculated from raw data) that points to all channels(filtered_value[0..TOUCH_PAD_MAX-1]).

Enumerations

enum **touch_pad_t**

Values:

TOUCH_PAD_NUM0 = 0

Touch pad channel 0 is GPIO4

TOUCH_PAD_NUM1

Touch pad channel 1 is GPIO0

TOUCH_PAD_NUM2

Touch pad channel 2 is GPIO2

TOUCH_PAD_NUM3

Touch pad channel 3 is GPIO15

TOUCH_PAD_NUM4

Touch pad channel 4 is GPIO13

TOUCH_PAD_NUM5

Touch pad channel 5 is GPIO12

TOUCH_PAD_NUM6

Touch pad channel 6 is GPIO14

TOUCH_PAD_NUM7

Touch pad channel 7 is GPIO27

TOUCH_PAD_NUM8

Touch pad channel 8 is GPIO33

TOUCH_PAD_NUM9
: Touch pad channel 9 is GPIO32

TOUCH_PAD_MAX

enum touch_high_volt_t
: *Values:*

TOUCH_HVOLT_KEEP = -1
: Touch sensor high reference voltage, no change

TOUCH_HVOLT_2V4 = 0
: Touch sensor high reference voltage, 2.4V

TOUCH_HVOLT_2V5
: Touch sensor high reference voltage, 2.5V

TOUCH_HVOLT_2V6
: Touch sensor high reference voltage, 2.6V

TOUCH_HVOLT_2V7
: Touch sensor high reference voltage, 2.7V

TOUCH_HVOLT_MAX

enum touch_low_volt_t
: *Values:*

TOUCH_LVOLT_KEEP = -1
: Touch sensor low reference voltage, no change

TOUCH_LVOLT_0V5 = 0
: Touch sensor low reference voltage, 0.5V

TOUCH_LVOLT_0V6
: Touch sensor low reference voltage, 0.6V

TOUCH_LVOLT_0V7
: Touch sensor low reference voltage, 0.7V

TOUCH_LVOLT_0V8
: Touch sensor low reference voltage, 0.8V

TOUCH_LVOLT_MAX

enum touch_volt_atten_t
: *Values:*

TOUCH_HVOLT_ATTEN_KEEP = -1
: Touch sensor high reference voltage attenuation, no change

TOUCH_HVOLT_ATTEN_1V5 = 0
: Touch sensor high reference voltage attenuation, 1.5V attenuation

`TOUCH_HVOLT_ATTEN_1V`

Touch sensor high reference voltage attenuation, 1.0V attenuation

`TOUCH_HVOLT_ATTEN_0V5`

Touch sensor high reference voltage attenuation, 0.5V attenuation

`TOUCH_HVOLT_ATTEN_0V`

Touch sensor high reference voltage attenuation, 0V attenuation

`TOUCH_HVOLT_ATTEN_MAX`

`enum touch_cnt_slope_t`

Values:

`TOUCH_PAD_SLOPE_0` = 0

Touch sensor charge / discharge speed, always zero

`TOUCH_PAD_SLOPE_1` = 1

Touch sensor charge / discharge speed, slowest

`TOUCH_PAD_SLOPE_2` = 2

Touch sensor charge / discharge speed

`TOUCH_PAD_SLOPE_3` = 3

Touch sensor charge / discharge speed

`TOUCH_PAD_SLOPE_4` = 4

Touch sensor charge / discharge speed

`TOUCH_PAD_SLOPE_5` = 5

Touch sensor charge / discharge speed

`TOUCH_PAD_SLOPE_6` = 6

Touch sensor charge / discharge speed

`TOUCH_PAD_SLOPE_7` = 7

Touch sensor charge / discharge speed, fast

`TOUCH_PAD_SLOPE_MAX`

`enum touch_trigger_mode_t`

Values:

`TOUCH_TRIGGER_BELOW` = 0

Touch interrupt will happen if counter value is less than threshold.

`TOUCH_TRIGGER_ABOVE` = 1

Touch interrupt will happen if counter value is larger than threshold.

`TOUCH_TRIGGER_MAX`

`enum touch_trigger_src_t`

Values:

TOUCH_TRIGGER_SOURCE_BOTH = 0

wakeup interrupt is generated if both SET1 and SET2 are "touched"

TOUCH_TRIGGER_SOURCE_SET1 = 1

wakeup interrupt is generated if SET1 is "touched"

TOUCH_TRIGGER_SOURCE_MAX

enum touch_tie_opt_t

Values:

TOUCH_PAD_TIE_OPT_LOW = 0

Initial level of charging voltage, low level

TOUCH_PAD_TIE_OPT_HIGH = 1

Initial level of charging voltage, high level

TOUCH_PAD_TIE_OPT_MAX

enum touch_fsm_mode_t

Values:

TOUCH_FSM_MODE_TIMER = 0

To start touch FSM by timer

TOUCH_FSM_MODE_SW

To start touch FSM by software trigger

TOUCH_FSM_MODE_MAX

GPIO Lookup Macros

Some useful macros can be used to specified the GPIO number of a touchpad channel, or vice versa. e.g.

1. TOUCH_PAD_NUM5_GPIO_NUM is the GPIO number of channel 5 (12);
2. TOUCH_PAD_GPIO4_CHANNEL is the channel number of GPIO 4 (channel 0).

Header File

- soc/esp32/include/soc/touch_channel.h

Macros

TOUCH_PAD_GPIO4_CHANNEL

TOUCH_PAD_NUM0_GPIO_NUM

TOUCH_PAD_GPIO0_CHANNEL

TOUCH_PAD_NUM1_GPIO_NUM

TOUCH_PAD_GPIO2_CHANNEL

TOUCH_PAD_NUM2_GPIO_NUM

TOUCH_PAD_GPIO15_CHANNEL

TOUCH_PAD_NUM3_GPIO_NUM

TOUCH_PAD_GPIO13_CHANNEL

TOUCH_PAD_NUM4_GPIO_NUM

TOUCH_PAD_GPIO12_CHANNEL

TOUCH_PAD_NUM5_GPIO_NUM

TOUCH_PAD_GPIO14_CHANNEL

TOUCH_PAD_NUM6_GPIO_NUM

TOUCH_PAD_GPIO27_CHANNEL

TOUCH_PAD_NUM7_GPIO_NUM

TOUCH_PAD_GPIO33_CHANNEL

TOUCH_PAD_NUM8_GPIO_NUM

TOUCH_PAD_GPIO32_CHANNEL

TOUCH_PAD_NUM9_GPIO_NUM

3.3.19 UART

Overview

A Universal Asynchronous Receiver/Transmitter (UART) is a component known to handle the timing requirements for a variety of widely-adapted interfaces (RS232, RS485, RS422, ···). A UART provides a widely adopted and cheap method to realize full-duplex or half-duplex data exchange among different devices.

There are three UART controllers available on the ESP32 chip. They are compatible with UART-enabled devices from various manufacturers. All UART controllers integrated in the ESP32 feature an identical set of registers for ease of programming and flexibility. In this documentation, these controllers are referred to as UART0, UART1, and UART2.

Functional Overview

The following overview describes functions and data types used to establish communication between ESP32 and some other UART device. The overview reflects a typical workflow when programming ESP32' s UART driver and is broken down into the following sections:

1. *Setting Communication Parameters* - baud rate, data bits, stop bits, etc,
2. *Setting Communication Pins* - pins the other UART is connected to
3. *Driver Installation* - allocate ESP32' s resources for the UART driver
4. *Running UART Communication* - send / receive the data
5. *Using Interrupts* - trigger interrupts on specific communication events
6. *Deleting Driver* - release ESP32' s resources, if UART communication is not required anymore

The minimum to make the UART working is to complete the first four steps, the last two steps are optional.

The driver is identified by *uart_port_t*, that corresponds to one of the tree UART controllers. Such identification is present in all the following function calls.

Setting Communication Parameters

There are two ways to set the communications parameters for UART. One is to do it in one shot by calling *uart_param_config()* provided with configuration parameters in *uart_config_t* structure.

The alternate way is to configure specific parameters individually by calling dedicated functions:

- Baud rate - *uart_set_baudrate()*
- Number of transmitted bits - *uart_set_word_length()* selected out of *uart_word_length_t*
- Parity control - *uart_set_parity()* selected out of *uart_parity_t*
- Number of stop bits - *uart_set_stop_bits()* selected out of *uart_stop_bits_t*
- Hardware flow control mode - *uart_set_hw_flow_ctrl()* selected out of *uart_hw_flowcontrol_t*
- Communication mode - *uart_set_mode()* selected out of *uart_mode_t*

Configuration example:

```
const int uart_num = UART_NUM_2;
uart_config_t uart_config = {
    .baud_rate = 115200,
    .data_bits = UART_DATA_8_BITS,
    .parity = UART_PARITY_DISABLE,
    .stop_bits = UART_STOP_BITS_1,
    .flow_ctrl = UART_HW_FLOWCTRL_CTS_RTS,
    .rx_flow_ctrl_thresh = 122,
};
// Configure UART parameters
ESP_ERROR_CHECK(uart_param_config(uart_num, &uart_config));
```

All the above functions have a `_get_` equivalent to retrieve the current setting, e.g. *uart_get_baudrate()*.

Setting Communication Pins

In next step, after configuring communication parameters, we are setting physical GPIO pin numbers the other UART will be connected to. This is done in a single step by calling function *uart_set_pin()* and providing it with GPIO numbers, that driver should use for the Tx, Rx, RTS and CTS signals.

Instead of GPIO pin number we can enter a macro UART_PIN_NO_CHANGE and the currently allocated pin will not be changed. The same macro should be entered if certain pin will not be used.

```
// Set UART pins(TX: IO16 (UART2 default), RX: IO17 (UART2 default), RTS: IO18, CTS:␣
↪IO19)
ESP_ERROR_CHECK(uart_set_pin(UART_NUM_2, UART_PIN_NO_CHANGE, UART_PIN_NO_CHANGE, 18,␣
↪19));
```

Driver Installation

Once configuration of driver is complete, we can install it by calling *uart_driver_install()*. As result several resources required by the UART will be allocated. The type / size of resources are specified as function call parameters and concern:

- size of the send buffer
- size of the receive buffer
- the event queue handle and size
- flags to allocate an interrupt

Example:

```
// Setup UART buffered IO with event queue
const int uart_buffer_size = (1024 * 2);
QueueHandle_t uart_queue;
// Install UART driver using an event queue here
ESP_ERROR_CHECK(uart_driver_install(UART_NUM_2, uart_buffer_size, \
                                        uart_buffer_size, 10, &uart_queue, 0));
```

If all above steps have been complete, we are ready to connect the other UART device and check the communication.

Running UART Communication

The processes of serial communication are under control of UART' s hardware FSM. The data to be sent should be put into Tx FIFO buffer, FSM will serialize them and sent out. A similar process, but in reverse order, is done to receive the data. Incoming serial stream is processed by FSM and moved to the Rx FIFO

buffer. Therefore the task of API' s communication functions is limited to writing and reading the data to / from the respective buffer. This is reflected in some function names, e.g.: *uart_write_bytes()* to transmit the data out, or *uart_read_bytes()* to read the incoming data.

Transmitting

The basic API function to write the data to Tx FIFO buffer is *uart_tx_chars()*. If the buffer contains not sent characters, this function will write what fits into the empty space and exit reporting the number of bytes actually written.

There is a 'companion' function *uart_wait_tx_done()* that waits until all the data are transmitted out and the Tx FIFO is empty.

```
// Wait for packet to be sent
const int uart_num = UART_NUM_2;
ESP_ERROR_CHECK(uart_wait_tx_done(uart_num, 100)); // wait timeout is 100 RTOS ticks␣
↪(TickType_t)
```

An easier to work with function is *uart_write_bytes()*. It sets up an intermediate ring buffer and exits after copying the data to this buffer. When there is an empty space in the FIFO, the data are moved from the ring buffer to the FIFO in the background by an ISR. The code below demonstrates using of this function.

```
// Write data to UART.
char* test_str = "This is a test string.\n";
uart_write_bytes(uart_num, (const char*)test_str, strlen(test_str));
```

There is a similar function as above that adds a serial break signal after sending the data - *uart_write_bytes_with_break()*. The 'serial break signal' means holding TX line low for period longer than one data frame

```
// Write data to UART, end with a break signal.
uart_write_bytes_with_break(uart_num, "test break\n",strlen("test break\n"), 100);
```

Receiving

To retrieve the data received by UART and saved in Rx FIFO, use function *uart_read_bytes()*. You can check in advance what is the number of bytes available in Rx FIFO by calling *uart_get_buffered_data_len()*. Below is the example of using this function:

```
// Read data from UART.
const int uart_num = UART_NUM_2;
uint8_t data[128];
```

(下页继续)

(续上页)

```
int length = 0;
ESP_ERROR_CHECK(uart_get_buffered_data_len(uart_num, (size_t*)&length));
length = uart_read_bytes(uart_num, data, length, 100);
```

If the data in Rx FIFO is not required and should be discarded, call *uart_flush()*.

Software Flow Control

When the hardware flow control is disabled, then use *uart_set_rts()* and *uart_set_dtr()* to manually set the levels of the RTS and DTR signals.

Communication Mode Selection

The UART controller supports set of communication modes. The selection of mode can be performed using function *uart_set_mode()*. Once the specific mode is selected the UART driver will handle behavior of external peripheral according to mode. As an example it can control RS485 driver chip over RTS line to allow half-duplex RS485 communication.

```
// Setup UART in rs485 half duplex mode
ESP_ERROR_CHECK(uart_set_mode(uart_num, UART_MODE_RS485_HALF_DUPLEX));
```

Using Interrupts

There are nineteen interrupts reported on specific states of UART or on detected errors. The full list of available interrupts is described in ESP32 Technical Reference Manual (PDF). To enable specific interrupts call *uart_enable_intr_mask()*, to disable call *uart_disable_intr_mask()*. The mask of all interrupts is available as `UART_INTR_MASK`. Registration of an handler to service interrupts is done with *uart_isr_register()*, freeing the handler with *uart_isr_free()*. To clear the interrupt status bits once the handler is called use *uart_clear_intr_status()*.

The API provides a convenient way to handle specific interrupts discussed above by wrapping them into dedicated functions:

- **Event detection** - there are several events defined in *uart_event_type_t* that may be reported to user application using FreeRTOS queue functionality. You can enable this functionality when calling *uart_driver_install()* described in *Driver Installation*. Example how to use it is covered in peripherals/uart_events.
- **FIFO space threshold or transmission timeout reached** - the interrupts on TX or Rx FIFO buffer being filled with specific number of characters or on a timeout of sending or receiving data. To use these interrupts, first configure respective threshold values of the buffer length and the timeout

by entering them in *uart_intr_config_t* structure and calling *uart_intr_config()*. Then enable interrupts with functions *uart_enable_rx_intr()* and *uart_enable_tx_intr()*. To disable these interrupts there are corresponding functions *uart_disable_rx_intr()* or *uart_disable_tx_intr()*.

- **Pattern detection** - an interrupt triggered on detecting a 'pattern' of the same character being sent number of times. The functions that allow to configure, enable and disable this interrupt are *uart_enable_pattern_det_intr()* and cpp:func:*uart_disable_pattern_det_intr*.

Macros

The API provides several macros to define configuration parameters, e.g. `UART_FIFO_LEN` to define the length of the hardware FIFO buffers, `UART_BITRATE_MAX` that gives the maximum baud rate supported by UART, etc.

Deleting Driver

If communication is established with *uart_driver_install()* for some specific period of time and then not required, the driver may be removed to free allocated resources by calling *uart_driver_delete()*.

Overview of RS485 specific communication options

注解: Here and below the notation UART_REGISTER.UART_OPTION_BIT will be used to describe register options of UART. See the ESP32 Technical Reference Manual for more information.

- UART_RS485_CONF_REG.UART_RS485_EN = 1, enable RS485 communication mode support.
- UART_RS485_CONF_REG.UART_RS485TX_RX_EN, transmitter's output signal loop back to the receiver's input signal when this bit is set.
- UART_RS485_CONF_REG.UART_RS485RXBY_TX_EN, when bit is set the transmitter should send data when its receiver is busy (remove collisions automatically by hardware).

The on chip RS485 UART hardware is able to detect signal collisions during transmission of datagram and generate an interrupt UART_RS485_CLASH_INT when it is enabled. The term collision means that during transmission of datagram the received data is different with what has been transmitted out or framing errors exist. Data collisions are usually associated with the presence of other active devices on the bus or due to bus errors. The collision detection feature allows suppressing the collisions when its interrupt is activated and triggered. The UART_RS485_FRM_ERR_INT and UART_RS485_PARITY_ERR_INT interrupts can be used with collision detection feature to control frame errors and parity errors accordingly in RS485 mode. This functionality is supported in the UART driver and can be used with selected UART_MODE_RS485_A mode (see *uart_set_mode()* function). The collision detection option can work with circuit A and circuit C (see below) which allow collision detection. In case of using circuit number A or

B, control of RTS pin connected to DE pin of bus driver should be provided manually by application. The function *uart_get_collision_flag()* allows to get collision detection flag from driver.

The ESP32 UART hardware is not able to control automatically the RTS pin connected to ~RE/DE input of RS485 bus driver to provide half duplex communication. This can be done by UART driver software when UART_MODE_RS485_HALF_DUPLEX mode is selected using *uart_set_mode()* function. The UART driver software automatically asserts the RTS pin (logic 1) once the host writes data to the transmit FIFO, and deasserts RTS pin (logic 0) once the last bit of the data has been transmitted. To use this mode the software would have to disable the hardware flow control function. This mode works with any of used circuit showed below.

Overview of RS485 interface connection options

注解: The example schematics below are prepared for just demonstration of basic aspects of RS485 interface connection for ESP32 and may not contain all required elements. The Analog Devices ADM483 & ADM2483 are examples of common RS485 transceivers and other similar transceivers can also be used.

The circuit A: Collision detection circuit

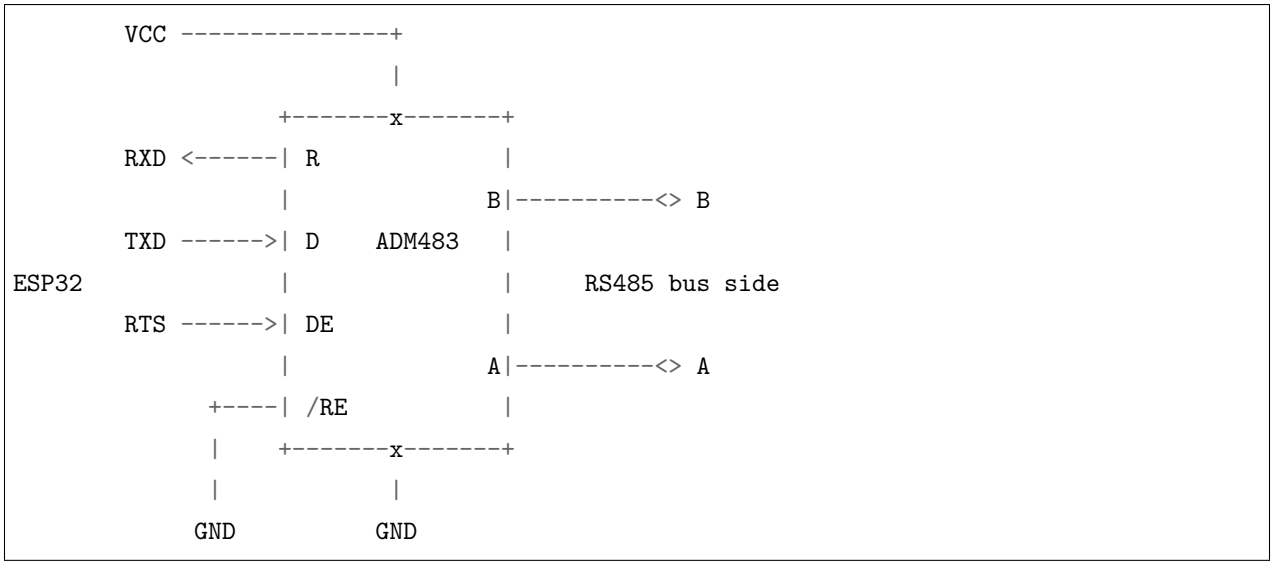

This circuit is preferred because it allows collision detection and is simple enough. The receiver in the line driver is constantly enabled that allows UART to monitor the RS485 bus. Echo suppression is done by the ESP32 chip hardware when the UART_RS485_CONF_REG.UART_RS485TX_RX_EN bit is enabled.

The circuit B: manual switching of transmitter/receiver without collision detection

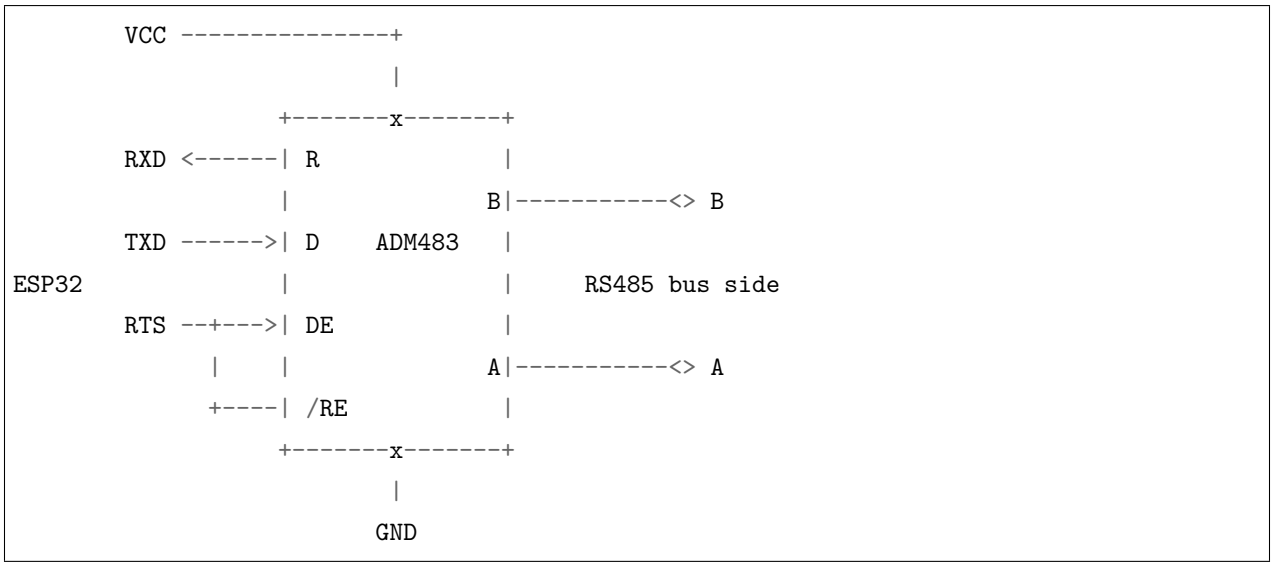

This circuit does not allow collision detection. It suppresses the null bytes receive by hardware when UART_RS485_CONF_REG.UART_RS485TX_RX_EN is set. The bit UART_RS485_CONF_REG.UART_RS485RXBY_TX_EN is not applicable in this case.

The circuit C: auto switching of transmitter/receiver

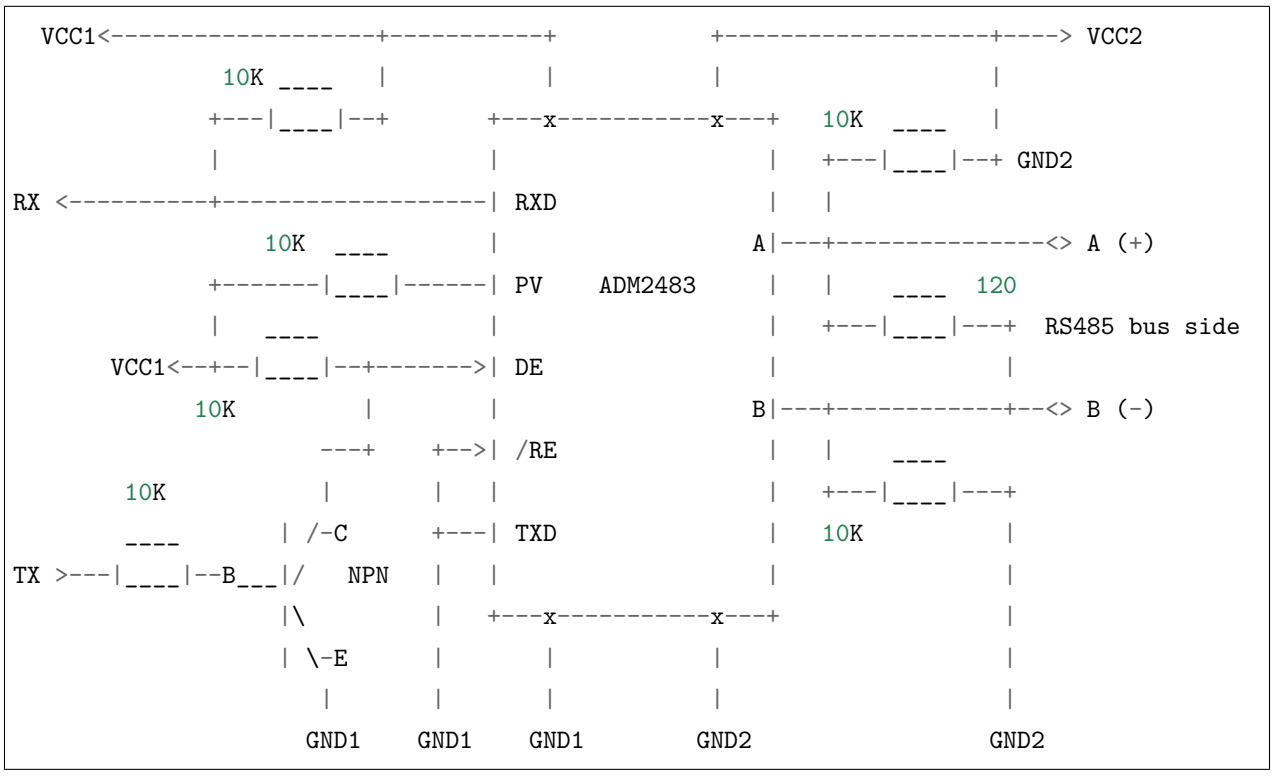

This galvanic isolated circuit does not require RTS pin control by software application or driver because it controls transceiver direction automatically. However it requires removing null bytes during transmission by setting UART_RS485_CONF_REG.UART_RS485RXBY_TX_EN = 1, UART_RS485_CONF_REG.UART_RS485TX_RX_EN = 0. This variant can work in any RS485 UART mode or even in UART_MODE_UART.

Application Examples

Configure UART settings and install UART driver to read/write using UART1 interface: peripherals/uart/uart_echo.

Demonstration of how to report various communication events and how to use patern detection interrupts: peripherals/uart/uart_events.

Transmitting and receiveing with the same UART in two separate FreeRTOS tasks: peripherals/uart/uart_async_rxtxtasks.

Using synchronous I/O multiplexing for UART file descriptors: peripherals/uart/uart_select.

Setup of UART driver to communicate over RS485 interface in half-duplex mode: peripherals/uart/uart_echo_rs485. This example is similar to uart_echo but provide communication through RS485 interface chip connected to ESP32 pins.

Demonstration of how to get GPS information by parsing NMEA0183 statements received from GPS via UART peripheral: peripherals/uart/nmea0183_parser.

API Reference

Header File

- driver/include/driver/uart.h

Functions

esp_err_t **uart_set_word_length**(*uart_port_t uart_num*, *uart_word_length_t data_bit*)

Set UART data bits.

Return

- ESP_OK Success
- ESP_FAIL Parameter error

Parameters

- `uart_num`: UART_NUM_0, UART_NUM_1 or UART_NUM_2
- `data_bit`: UART data bits

esp_err_t **uart_get_word_length**(*uart_port_t uart_num*, *uart_word_length_t *data_bit*)

Get UART data bits.

Return

- ESP_FAIL Parameter error
- ESP_OK Success, result will be put in (*data_bit)

Parameters

- `uart_num`: UART_NUM_0, UART_NUM_1 or UART_NUM_2
- `data_bit`: Pointer to accept value of UART data bits.

esp_err_t **uart_set_stop_bits**(*uart_port_t uart_num*, *uart_stop_bits_t stop_bits*)

Set UART stop bits.

Return

- ESP_OK Success
- ESP_FAIL Fail

Parameters

- `uart_num`: UART_NUM_0, UART_NUM_1 or UART_NUM_2
- `stop_bits`: UART stop bits

esp_err_t **uart_get_stop_bits**(*uart_port_t uart_num*, *uart_stop_bits_t *stop_bits*)

Get UART stop bits.

Return

- ESP_FAIL Parameter error
- ESP_OK Success, result will be put in (*stop_bit)

Parameters

- `uart_num`: UART_NUM_0, UART_NUM_1 or UART_NUM_2
- `stop_bits`: Pointer to accept value of UART stop bits.

esp_err_t **uart_set_parity**(*uart_port_t uart_num*, *uart_parity_t parity_mode*)

Set UART parity mode.

Return

- ESP_FAIL Parameter error
- ESP_OK Success

Parameters

- `uart_num`: UART_NUM_0, UART_NUM_1 or UART_NUM_2
- `parity_mode`: the enum of uart parity configuration

esp_err_t **uart_get_parity**(*uart_port_t uart_num*, *uart_parity_t *parity_mode*)

Get UART parity mode.

Return

- ESP_FAIL Parameter error
- ESP_OK Success, result will be put in (*parity_mode)

Parameters

- `uart_num`: UART_NUM_0, UART_NUM_1 or UART_NUM_2
- `parity_mode`: Pointer to accept value of UART parity mode.

esp_err_t **uart_set_baudrate**(*uart_port_t uart_num*, uint32_t *baudrate*)

Set UART baud rate.

Return

- ESP_FAIL Parameter error
- ESP_OK Success

Parameters

- `uart_num`: UART_NUM_0, UART_NUM_1 or UART_NUM_2
- `baudrate`: UART baud rate.

esp_err_t **uart_get_baudrate**(*uart_port_t uart_num*, uint32_t *baudrate*)

Get UART baud rate.

Return

- ESP_FAIL Parameter error
- ESP_OK Success, result will be put in (*baudrate)

Parameters

- `uart_num`: UART_NUM_0, UART_NUM_1 or UART_NUM_2
- `baudrate`: Pointer to accept value of UART baud rate

esp_err_t **uart_set_line_inverse**(*uart_port_t uart_num*, uint32_t *inverse_mask*)

Set UART line inverse mode.

Return

- ESP_OK Success
- ESP_FAIL Parameter error

Parameters

- `uart_num`: UART_NUM_0, UART_NUM_1 or UART_NUM_2
- `inverse_mask`: Choose the wires that need to be inverted. Inverse_mask should be chosen from UART_INVERSE_RXD / UART_INVERSE_TXD / UART_INVERSE_RTS / UART_INVERSE_CTS, combined with OR operation.

esp_err_t **uart_set_hw_flow_ctrl**(*uart_port_t uart_num*, *uart_hw_flowcontrol_t flow_ctrl*, uint8_t *rx_thresh*)

Set hardware flow control.

Return

- ESP_OK Success
- ESP_FAIL Parameter error

Parameters

- `uart_num`: UART_NUM_0, UART_NUM_1 or UART_NUM_2
- `flow_ctrl`: Hardware flow control mode
- `rx_thresh`: Threshold of Hardware RX flow control (0 ~ UART_FIFO_LEN). Only when UART_HW_FLOWCTRL_RTS is set, will the rx_thresh value be set.

esp_err_t **uart_set_sw_flow_ctrl**(*uart_port_t uart_num*, bool *enable*, uint8_t *rx_thresh_xon*, uint8_t *rx_thresh_xoff*)

Set software flow control.

Return

- ESP_OK Success
- ESP_FAIL Parameter error

Parameters

- `uart_num`: UART_NUM_0, UART_NUM_1 or UART_NUM_2
- `enable`: switch on or off
- `rx_thresh_xon`: low water mark
- `rx_thresh_xoff`: high water mark

esp_err_t **uart_get_hw_flow_ctrl**(*uart_port_t uart_num*, *uart_hw_flowcontrol_t *flow_ctrl*)

Get hardware flow control mode.

Return

- ESP_FAIL Parameter error
- ESP_OK Success, result will be put in (*flow_ctrl)

Parameters

- `uart_num`: UART_NUM_0, UART_NUM_1 or UART_NUM_2
- `flow_ctrl`: Option for different flow control mode.

esp_err_t **uart_clear_intr_status**(*uart_port_t uart_num*, uint32_t *clr_mask*)

Clear UART interrupt status.

Return

- ESP_OK Success
- ESP_FAIL Parameter error

Parameters

- `uart_num`: UART_NUM_0, UART_NUM_1 or UART_NUM_2
- `clr_mask`: Bit mask of the interrupt status to be cleared. The bit mask should be composed from the fields of register UART_INT_CLR_REG.

esp_err_t **uart_enable_intr_mask**(*uart_port_t uart_num*, uint32_t *enable_mask*)

Set UART interrupt enable.

Return

- ESP_OK Success
- ESP_FAIL Parameter error

Parameters

- `uart_num`: UART_NUM_0, UART_NUM_1 or UART_NUM_2
- `enable_mask`: Bit mask of the enable bits. The bit mask should be composed from the fields of register UART_INT_ENA_REG.

esp_err_t **uart_disable_intr_mask**(*uart_port_t uart_num*, uint32_t *disable_mask*)

Clear UART interrupt enable bits.

Return

- ESP_OK Success
- ESP_FAIL Parameter error

Parameters

- `uart_num`: UART_NUM_0, UART_NUM_1 or UART_NUM_2
- `disable_mask`: Bit mask of the disable bits. The bit mask should be composed from the fields of register UART_INT_ENA_REG.

esp_err_t **uart_enable_rx_intr**(*uart_port_t uart_num*)

Enable UART RX interrupt (RX_FULL & RX_TIMEOUT INTERRUPT)

Return

- ESP_OK Success
- ESP_FAIL Parameter error

Parameters

- `uart_num`: UART_NUM_0, UART_NUM_1 or UART_NUM_2

esp_err_t **uart_disable_rx_intr**(*uart_port_t uart_num*)

Disable UART RX interrupt (RX_FULL & RX_TIMEOUT INTERRUPT)

Return

- ESP_OK Success
- ESP_FAIL Parameter error

Parameters

- `uart_num`: UART_NUM_0, UART_NUM_1 or UART_NUM_2

esp_err_t **uart_disable_tx_intr**(*uart_port_t uart_num*)

Disable UART TX interrupt (TX_FULL & TX_TIMEOUT INTERRUPT)

Return

- ESP_OK Success
- ESP_FAIL Parameter error

Parameters

- `uart_num`: UART_NUM_0, UART_NUM_1 or UART_NUM_2

esp_err_t **uart_enable_tx_intr**(*uart_port_t uart_num*, int *enable*, int *thresh*)

Enable UART TX interrupt (TX_FULL & TX_TIMEOUT INTERRUPT)

Return

- ESP_OK Success
- ESP_FAIL Parameter error

Parameters

- `uart_num`: UART_NUM_0, UART_NUM_1 or UART_NUM_2
- `enable`: 1: enable; 0: disable
- `thresh`: Threshold of TX interrupt, 0 ~ UART_FIFO_LEN

esp_err_t **uart_isr_register**(*uart_port_t uart_num*, void (**fn*))void *
, void **arg*, int *intr_alloc_flags*, *uart_isr_handle_t* **handle*Register UART interrupt handler (ISR).

Note UART ISR handler will be attached to the same CPU core that this function is running on.

Return

- ESP_OK Success
- ESP_FAIL Parameter error

Parameters

- `uart_num`: UART_NUM_0, UART_NUM_1 or UART_NUM_2
- `fn`: Interrupt handler function.
- `arg`: parameter for handler function
- `intr_alloc_flags`: Flags used to allocate the interrupt. One or multiple (ORred) ESP_INTR_FLAG_* values. See esp_intr_alloc.h for more info.
- `handle`: Pointer to return handle. If non-NULL, a handle for the interrupt will be returned here.

esp_err_t **uart_isr_free**(*uart_port_t uart_num*)
Free UART interrupt handler registered by uart_isr_register. Must be called on the same core as uart_isr_register was called.

Return

- ESP_OK Success
- ESP_FAIL Parameter error

Parameters

- `uart_num`: UART_NUM_0, UART_NUM_1 or UART_NUM_2

esp_err_t **uart_set_pin**(*uart_port_t uart_num*, int *tx_io_num*, int *rx_io_num*, int *rts_io_num*,
int *cts_io_num*)
Set UART pin number.

Note Internal signal can be output to multiple GPIO pads. Only one GPIO pad can connect with input signal.

Note Instead of GPIO number a macro 'UART_PIN_NO_CHANGE' may be provided to keep the currently allocated pin.

Return

- ESP_OK Success
- ESP_FAIL Parameter error

Parameters

- `uart_num`: UART_NUM_0, UART_NUM_1 or UART_NUM_2
- `tx_io_num`: UART TX pin GPIO number.
- `rx_io_num`: UART RX pin GPIO number.
- `rts_io_num`: UART RTS pin GPIO number.
- `cts_io_num`: UART CTS pin GPIO number.

esp_err_t **uart_set_rts**(*uart_port_t uart_num*, int *level*)

Manually set the UART RTS pin level.

Note UART must be configured with hardware flow control disabled.

Return

- ESP_OK Success
- ESP_FAIL Parameter error

Parameters

- `uart_num`: UART_NUM_0, UART_NUM_1 or UART_NUM_2
- `level`: 1: RTS output low (active); 0: RTS output high (block)

esp_err_t **uart_set_dtr**(*uart_port_t uart_num*, int *level*)

Manually set the UART DTR pin level.

Return

- ESP_OK Success
- ESP_FAIL Parameter error

Parameters

- `uart_num`: UART_NUM_0, UART_NUM_1 or UART_NUM_2
- `level`: 1: DTR output low; 0: DTR output high

esp_err_t **uart_set_tx_idle_num**(*uart_port_t uart_num*, uint16_t *idle_num*)

Set UART idle interval after tx FIFO is empty.

Return

- ESP_OK Success
- ESP_FAIL Parameter error

Parameters

- `uart_num`: UART_NUM_0, UART_NUM_1 or UART_NUM_2
- `idle_num`: idle interval after tx FIFO is empty(unit: the time it takes to send one bit under current baudrate)

esp_err_t **uart_param_config**(*uart_port_t uart_num*, **const** *uart_config_t *uart_config*)

Set UART configuration parameters.

Return

- ESP_OK Success
- ESP_FAIL Parameter error

Parameters

- `uart_num`: UART_NUM_0, UART_NUM_1 or UART_NUM_2
- `uart_config`: UART parameter settings

esp_err_t **uart_intr_config**(*uart_port_t uart_num*, **const** *uart_intr_config_t *intr_conf*)

Configure UART interrupts.

Return

- ESP_OK Success
- ESP_FAIL Parameter error

Parameters

- `uart_num`: UART_NUM_0, UART_NUM_1 or UART_NUM_2
- `intr_conf`: UART interrupt settings

esp_err_t **uart_driver_install**(*uart_port_t uart_num*, int *rx_buffer_size*, int *tx_buffer_size*, int *queue_size*, *QueueHandle_t *uart_queue*, int *intr_alloc_flags*)

Install UART driver.

UART ISR handler will be attached to the same CPU core that this function is running on.

Note Rx_buffer_size should be greater than UART_FIFO_LEN. Tx_buffer_size should be either zero or greater than UART_FIFO_LEN.

Return

- ESP_OK Success
- ESP_FAIL Parameter error

Parameters

- `uart_num`: UART_NUM_0, UART_NUM_1 or UART_NUM_2
- `rx_buffer_size`: UART RX ring buffer size.
- `tx_buffer_size`: UART TX ring buffer size. If set to zero, driver will not use TX buffer, TX function will block task until all data have been sent out.
- `queue_size`: UART event queue size/depth.
- `uart_queue`: UART event queue handle (out param). On success, a new queue handle is written here to provide access to UART events. If set to NULL, driver will not use an event queue.
- `intr_alloc_flags`: Flags used to allocate the interrupt. One or multiple (ORred) ESP_INTR_FLAG_* values. See esp_intr_alloc.h for more info. Do not set ESP_INTR_FLAG_IRAM here (the driver's ISR handler is not located in IRAM)

esp_err_t **uart_driver_delete**(*uart_port_t uart_num*)

Uninstall UART driver.

Return

- ESP_OK Success
- ESP_FAIL Parameter error

Parameters

- `uart_num`: UART_NUM_0, UART_NUM_1 or UART_NUM_2

esp_err_t **uart_wait_tx_done**(*uart_port_t uart_num*, TickType_t *ticks_to_wait*)

Wait until UART TX FIFO is empty.

Return

- ESP_OK Success
- ESP_FAIL Parameter error
- ESP_ERR_TIMEOUT Timeout

Parameters

- `uart_num`: UART_NUM_0, UART_NUM_1 or UART_NUM_2
- `ticks_to_wait`: Timeout, count in RTOS ticks

int **uart_tx_chars**(*uart_port_t uart_num*, **const** char ***buffer*, uint32_t *len*)

Send data to the UART port from a given buffer and length.

This function will not wait for enough space in TX FIFO. It will just fill the available TX FIFO and return when the FIFO is full.

Note This function should only be used when UART TX buffer is not enabled.

Return

- (-1) Parameter error
- OTHERS (>=0) The number of bytes pushed to the TX FIFO

Parameters

- `uart_num`: UART_NUM_0, UART_NUM_1 or UART_NUM_2
- `buffer`: data buffer address
- `len`: data length to send

int **uart_write_bytes**(*uart_port_t uart_num*, **const** char ***src*, size_t *size*)

Send data to the UART port from a given buffer and length,.

If the UART driver' s parameter 'tx_buffer_size' is set to zero: This function will not return until all the data have been sent out, or at least pushed into TX FIFO.

Otherwise, if the 'tx_buffer_size' > 0, this function will return after copying all the data to tx ring buffer, UART ISR will then move data from the ring buffer to TX FIFO gradually.

Return

- (-1) Parameter error
- OTHERS (>=0) The number of bytes pushed to the TX FIFO

Parameters

- `uart_num`: UART_NUM_0, UART_NUM_1 or UART_NUM_2
- `src`: data buffer address
- `size`: data length to send

int **uart_write_bytes_with_break**(*uart_port_t uart_num*, **const** char ***src*, size_t *size*, int *brk_len*)

Send data to the UART port from a given buffer and length,.

If the UART driver' s parameter 'tx_buffer_size' is set to zero: This function will not return until all the data and the break signal have been sent out. After all data is sent out, send a break signal.

Otherwise, if the 'tx_buffer_size' > 0, this function will return after copying all the data to tx ring buffer, UART ISR will then move data from the ring buffer to TX FIFO gradually. After all data sent out, send a break signal.

Return

- (-1) Parameter error
- OTHERS (>=0) The number of bytes pushed to the TX FIFO

Parameters

- `uart_num`: UART_NUM_0, UART_NUM_1 or UART_NUM_2
- `src`: data buffer address
- `size`: data length to send
- `brk_len`: break signal duration(unit: the time it takes to send one bit at current baudrate)

int **uart_read_bytes**(*uart_port_t uart_num*, uint8_t **buf*, uint32_t *length*, TickType_t *ticks_to_wait*)

UART read bytes from UART buffer.

Return

- (-1) Error
- OTHERS (>=0) The number of bytes read from UART FIFO

Parameters

- `uart_num`: UART_NUM_0, UART_NUM_1 or UART_NUM_2
- `buf`: pointer to the buffer.
- `length`: data length
- `ticks_to_wait`: sTimeout, count in RTOS ticks

esp_err_t **uart_flush**(*uart_port_t uart_num*)

Alias of uart_flush_input. UART ring buffer flush. This will discard all data in the UART RX buffer.

Note Instead of waiting the data sent out, this function will clear UART rx buffer. In order to send all the data in tx FIFO, we can use uart_wait_tx_done function.

Return

- ESP_OK Success
- ESP_FAIL Parameter error

Parameters

- `uart_num`: UART_NUM_0, UART_NUM_1 or UART_NUM_2

esp_err_t **uart_flush_input**(*uart_port_t uart_num*)

Clear input buffer, discard all the data is in the ring-buffer.

Note In order to send all the data in tx FIFO, we can use uart_wait_tx_done function.

Return

- ESP_OK Success
- ESP_FAIL Parameter error

Parameters

- `uart_num`: UART_NUM_0, UART_NUM_1 or UART_NUM_2

esp_err_t **uart_get_buffered_data_len**(*uart_port_t uart_num*, size_t **size*)

UART get RX ring buffer cached data length.

Return

- ESP_OK Success
- ESP_FAIL Parameter error

Parameters

- `uart_num`: UART port number.
- `size`: Pointer of size_t to accept cached data length

esp_err_t **uart_disable_pattern_det_intr**(*uart_port_t uart_num*)

UART disable pattern detect function. Designed for applications like 'AT commands'. When the hardware detects a series of one same character, the interrupt will be triggered.

Return

- ESP_OK Success
- ESP_FAIL Parameter error

Parameters

- `uart_num`: UART port number.

esp_err_t **uart_enable_pattern_det_intr**(*uart_port_t uart_num*, char *pattern_chr*, uint8_t *chr_num*, int *chr_tout*, int *post_idle*, int *pre_idle*)

UART enable pattern detect function. Designed for applications like 'AT commands'. When the hardware detect a series of one same character, the interrupt will be triggered.

Return

- ESP_OK Success
- ESP_FAIL Parameter error

Parameters

- `uart_num`: UART port number.
- `pattern_chr`: character of the pattern
- `chr_num`: number of the character, 8bit value.
- `chr_tout`: timeout of the interval between each pattern characters, 24bit value, unit is APB (80Mhz) clock cycle. When the duration is less than this value, it will not take this data as at_cmd char
- `post_idle`: idle time after the last pattern character, 24bit value, unit is APB (80Mhz) clock cycle. When the duration is less than this value, it will not take the previous data as the last at_cmd char
- `pre_idle`: idle time before the first pattern character, 24bit value, unit is APB (80Mhz) clock cycle. When the duration is less than this value, it will not take this data as the first at_cmd char

int **uart_pattern_pop_pos**(*uart_port_t uart_num*)

Return the nearest detected pattern position in buffer. The positions of the detected pattern are saved in a queue, this function will dequeue the first pattern position and move the pointer to next pattern position.

The following APIs will modify the pattern position info: uart_flush_input, uart_read_bytes, uart_driver_delete, uart_pop_pattern_pos It is the application' s responsibility to ensure atomic access to the pattern queue and the rx data buffer when using pattern detect feature.

Note If the RX buffer is full and flow control is not enabled, the detected pattern may not be found in the rx buffer due to overflow.

Return

- (-1) No pattern found for current index or parameter error
- others the pattern position in rx buffer.

Parameters

- `uart_num`: UART port number

int **uart_pattern_get_pos**(*uart_port_t uart_num*)

Return the nearest detected pattern position in buffer. The positions of the detected pattern are saved in a queue, This function do nothing to the queue.

The following APIs will modify the pattern position info: uart_flush_input, uart_read_bytes, uart_driver_delete, uart_pop_pattern_pos It is the application' s responsibility to ensure atomic access to the pattern queue and the rx data buffer when using pattern detect feature.

Note If the RX buffer is full and flow control is not enabled, the detected pattern may not be found in the rx buffer due to overflow.

Return

- (-1) No pattern found for current index or parameter error
- others the pattern position in rx buffer.

Parameters

- `uart_num`: UART port number

esp_err_t **uart_pattern_queue_reset**(*uart_port_t uart_num*, int *queue_length*)

Allocate a new memory with the given length to save record the detected pattern position in rx buffer.

Return

- ESP_ERR_NO_MEM No enough memory
- ESP_ERR_INVALID_STATE Driver not installed
- ESP_FAIL Parameter error
- ESP_OK Success

Parameters

- `uart_num`: UART port number
- `queue_length`: Max queue length for the detected pattern. If the queue length is not large enough, some pattern positions might be lost. Set this value to the maximum number of patterns that could be saved in data buffer at the same time.

esp_err_t **uart_set_mode**(*uart_port_t uart_num*, *uart_mode_t mode*)

UART set communication mode.

Note This function must be executed after uart_driver_install(), when the driver object is initialized.

Return

- ESP_OK Success
- ESP_ERR_INVALID_ARG Parameter error

Parameters

- `uart_num`: Uart number to configure
- `mode`: UART UART mode to set

esp_err_t **uart_set_rx_timeout**(*uart_port_t uart_num*, **const** uint8_t *tout_thresh*)

UART set threshold timeout for TOUT feature.

Return

- ESP_OK Success

- ESP_ERR_INVALID_ARG Parameter error
- ESP_ERR_INVALID_STATE Driver is not installed

Parameters

- `uart_num`: Uart number to configure
- `tout_thresh`: This parameter defines timeout threshold in uart symbol periods. The maximum value of threshold is 126. tout_thresh = 1, defines TOUT interrupt timeout equal to transmission time of one symbol (~11 bit) on current baudrate. If the time is expired the UART_RXFIFO_TOUT_INT interrupt is triggered. If tout_thresh == 0, the TOUT feature is disabled.

esp_err_t **uart_get_collision_flag**(*uart_port_t uart_num*, bool **collision_flag*)

Returns collision detection flag for RS485 mode Function returns the collision detection flag into variable pointed by collision_flag. *collision_flag = true, if collision detected else it is equal to false. This function should be executed when actual transmission is completed (after uart_write_bytes()).

Return

- ESP_OK Success
- ESP_ERR_INVALID_ARG Parameter error

Parameters

- `uart_num`: Uart number to configure
- `collision_flag`: Pointer to variable of type bool to return collision flag.

esp_err_t **uart_set_wakeup_threshold**(*uart_port_t uart_num*, int *wakeup_threshold*)

Set the number of RX pin signal edges for light sleep wakeup.

UART can be used to wake up the system from light sleep. This feature works by counting the number of positive edges on RX pin and comparing the count to the threshold. When the count exceeds the threshold, system is woken up from light sleep. This function allows setting the threshold value.

Stop bit and parity bits (if enabled) also contribute to the number of edges. For example, letter 'a' with ASCII code 97 is encoded as 0100001101 on the wire (with 8n1 configuration), start and stop bits included. This sequence has 3 positive edges (transitions from 0 to 1). Therefore, to wake up the system when 'a' is sent, set wakeup_threshold=3.

The character that triggers wakeup is not received by UART (i.e. it can not be obtained from UART FIFO). Depending on the baud rate, a few characters after that will also not be received. Note that when the chip enters and exits light sleep mode, APB frequency will be changing. To make sure that UART has correct baud rate all the time, select REF_TICK as UART clock source, by setting use_ref_tick field in *uart_config_t* to true.

Note in ESP32, the wakeup signal can only be input via IO_MUX (i.e. GPIO3 should be configured as function_1 to wake up UART0, GPIO9 should be configured as function_5 to wake up UART1), UART2 does not support light sleep wakeup feature.

Return

- ESP_OK on success
- ESP_ERR_INVALID_ARG if uart_num is incorrect or wakeup_threshold is outside of [3, 0x3ff] range.

Parameters

- `uart_num`: UART number
- `wakeup_threshold`: number of RX edges for light sleep wakeup, value is 3 .. 0x3ff.

esp_err_t **uart_get_wakeup_threshold**(*uart_port_t uart_num*, int **out_wakeup_threshold*)

Get the number of RX pin signal edges for light sleep wakeup.

See description of uart_set_wakeup_threshold for the explanation of UART wakeup feature.

Return

- ESP_OK on success
- ESP_ERR_INVALID_ARG if out_wakeup_threshold is NULL

Parameters

- `uart_num`: UART number
- `out_wakeup_threshold`: output, set to the current value of wakeup threshold for the given UART.

Structures

struct uart_config_t

UART configuration parameters for uart_param_config function.

Public Members

int **baud_rate**

UART baud rate

uart_word_length_t **data_bits**

UART byte size

uart_parity_t **parity**

UART parity mode

uart_stop_bits_t **stop_bits**
UART stop bits

uart_hw_flowcontrol_t **flow_ctrl**
UART HW flow control mode (cts/rts)

uint8_t **rx_flow_ctrl_thresh**
UART HW RTS threshold

bool **use_ref_tick**
Set to true if UART should be clocked from REF_TICK

struct uart_intr_config_t
UART interrupt configuration parameters for uart_intr_config function.

Public Members

uint32_t **intr_enable_mask**
UART interrupt enable mask, choose from UART_XXXX_INT_ENA_M under UART_INT_ENA_REG(i), connect with bit-or operator

uint8_t **rx_timeout_thresh**
UART timeout interrupt threshold (unit: time of sending one byte)

uint8_t **txfifo_empty_intr_thresh**
UART TX empty interrupt threshold.

uint8_t **rxfifo_full_thresh**
UART RX full interrupt threshold.

struct uart_event_t
Event structure used in UART event queue.

Public Members

uart_event_type_t **type**
UART event type

size_t **size**
UART data size for UART_DATA event

Macros

UART_FIFO_LEN
Length of the hardware FIFO buffers

UART_INTR_MASK
Mask of all UART interrupts

UART_LINE_INV_MASK
TBD

UART_BITRATE_MAX
Max bit rate supported by UART

UART_PIN_NO_CHANGE
Constant for uart_set_pin function which indicates that UART pin should not be changed

UART_INVERSE_DISABLE
Disable UART signal inverse

UART_INVERSE_RXD
UART RXD input inverse

UART_INVERSE_CTS
UART CTS input inverse

UART_INVERSE_TXD
UART TXD output inverse

UART_INVERSE_RTS
UART RTS output inverse

Type Definitions

typedef *intr_handle_t* **uart_isr_handle_t**

Enumerations

enum uart_mode_t
UART mode selection.

Values:

UART_MODE_UART = 0x00
mode: regular UART mode

UART_MODE_RS485_HALF_DUPLEX = 0x01
mode: half duplex RS485 UART mode control by RTS pin

UART_MODE_IRDA = 0x02
mode: IRDA UART mode

UART_MODE_RS485_COLLISION_DETECT = 0x03
mode: RS485 collision detection UART mode (used for test purposes)

`UART_MODE_RS485_APP_CTRL` = 0x04
mode: application control RS485 UART mode (used for test purposes)

enum uart_word_length_t
UART word length constants.

Values:

`UART_DATA_5_BITS` = 0x0
word length: 5bits

`UART_DATA_6_BITS` = 0x1
word length: 6bits

`UART_DATA_7_BITS` = 0x2
word length: 7bits

`UART_DATA_8_BITS` = 0x3
word length: 8bits

`UART_DATA_BITS_MAX` = 0x4

enum uart_stop_bits_t
UART stop bits number.

Values:

`UART_STOP_BITS_1` = 0x1
stop bit: 1bit

`UART_STOP_BITS_1_5` = 0x2
stop bit: 1.5bits

`UART_STOP_BITS_2` = 0x3
stop bit: 2bits

`UART_STOP_BITS_MAX` = 0x4

enum uart_port_t
UART peripheral number.

Values:

`UART_NUM_0` = 0x0
UART base address 0x3ff40000

`UART_NUM_1` = 0x1
UART base address 0x3ff50000

`UART_NUM_2` = 0x2
UART base address 0x3ff6e000

`UART_NUM_MAX`

enum uart_parity_t

UART parity constants.

Values:

UART_PARITY_DISABLE = 0x0

Disable UART parity

UART_PARITY_EVEN = 0x2

Enable UART even parity

UART_PARITY_ODD = 0x3

Enable UART odd parity

enum uart_hw_flowcontrol_t

UART hardware flow control modes.

Values:

UART_HW_FLOWCTRL_DISABLE = 0x0

disable hardware flow control

UART_HW_FLOWCTRL_RTS = 0x1

enable RX hardware flow control (rts)

UART_HW_FLOWCTRL_CTS = 0x2

enable TX hardware flow control (cts)

UART_HW_FLOWCTRL_CTS_RTS = 0x3

enable hardware flow control

UART_HW_FLOWCTRL_MAX = 0x4

enum uart_event_type_t

UART event types used in the ring buffer.

Values:

UART_DATA

UART data event

UART_BREAK

UART break event

UART_BUFFER_FULL

UART RX buffer full event

UART_FIFO_OVF

UART FIFO overflow event

UART_FRAME_ERR

UART RX frame error event

`UART_PARITY_ERR`
: UART RX parity event

`UART_DATA_BREAK`
: UART TX data and break event

`UART_PATTERN_DET`
: UART pattern detected

`UART_EVENT_MAX`
: UART event max index

GPIO Lookup Macros

You can use macros to specify the **direct** GPIO (UART module connected to pads through direct IO mux without the GPIO mux) number of a UART channel, or vice versa. The pin name can be omitted if the channel of a GPIO number is specified, e.g.:

1. `UART_NUM_2_TXD_DIRECT_GPIO_NUM` is the GPIO number of UART channel 2 TXD pin (17);
2. `UART_GPIO19_DIRECT_CHANNEL` is the UART channel number of GPIO 19 (channel 0);
3. `UART_CTS_GPIO19_DIRECT_CHANNEL` is the UART channel number of GPIO 19, and GPIO 19 must be a CTS pin (channel 0).

Header File

- soc/esp32/include/soc/uart_channel.h

Macros

`UART_GPIO1_DIRECT_CHANNEL`

`UART_NUM_0_TXD_DIRECT_GPIO_NUM`

`UART_GPIO3_DIRECT_CHANNEL`

`UART_NUM_0_RXD_DIRECT_GPIO_NUM`

`UART_GPIO19_DIRECT_CHANNEL`

`UART_NUM_0_CTS_DIRECT_GPIO_NUM`

`UART_GPIO22_DIRECT_CHANNEL`

`UART_NUM_0_RTS_DIRECT_GPIO_NUM`

`UART_TXD_GPIO1_DIRECT_CHANNEL`

`UART_RXD_GPIO3_DIRECT_CHANNEL`

UART_CTS_GPIO19_DIRECT_CHANNEL

UART_RTS_GPIO22_DIRECT_CHANNEL

UART_GPIO10_DIRECT_CHANNEL

UART_NUM_1_TXD_DIRECT_GPIO_NUM

UART_GPIO9_DIRECT_CHANNEL

UART_NUM_1_RXD_DIRECT_GPIO_NUM

UART_GPIO6_DIRECT_CHANNEL

UART_NUM_1_CTS_DIRECT_GPIO_NUM

UART_GPIO11_DIRECT_CHANNEL

UART_NUM_1_RTS_DIRECT_GPIO_NUM

UART_TXD_GPIO10_DIRECT_CHANNEL

UART_RXD_GPIO9_DIRECT_CHANNEL

UART_CTS_GPIO6_DIRECT_CHANNEL

UART_RTS_GPIO11_DIRECT_CHANNEL

UART_GPIO17_DIRECT_CHANNEL

UART_NUM_2_TXD_DIRECT_GPIO_NUM

UART_GPIO16_DIRECT_CHANNEL

UART_NUM_2_RXD_DIRECT_GPIO_NUM

UART_GPIO8_DIRECT_CHANNEL

UART_NUM_2_CTS_DIRECT_GPIO_NUM

UART_GPIO7_DIRECT_CHANNEL

UART_NUM_2_RTS_DIRECT_GPIO_NUM

UART_TXD_GPIO17_DIRECT_CHANNEL

UART_RXD_GPIO16_DIRECT_CHANNEL

UART_CTS_GPIO8_DIRECT_CHANNEL

UART_RTS_GPIO7_DIRECT_CHANNEL

Example code for this API section is provided in peripherals directory of ESP-IDF examples.

3.4 Application Protocols

3.4.1 mDNS Service

Overview

mDNS is a multicast UDP service that is used to provide local network service and host discovery.

mDNS is installed by default on most operating systems or is available as separate package. On `Mac OS` it is installed by default and is called `Bonjour`. Apple releases an installer for `Windows` that can be found on Apple' s support page. On `Linux`, mDNS is provided by avahi and is usually installed by default.

mDNS Properties

- `hostname`: the hostname that the device will respond to. If not set, the `hostname` will be read from the interface. Example: `my-esp32` will resolve to `my-esp32.local`
- `default_instance`: friendly name for your device, like `Jhon's ESP32 Thing`. If not set, `hostname` will be used.

Example method to start mDNS for the STA interface and set `hostname` and `default_instance`:

```
void start_mdns_service()
{
    //initialize mDNS service
    esp_err_t err = mdns_init();
    if (err) {
        printf("MDNS Init failed: %d\n", err);
        return;
    }

    //set hostname
    mdns_hostname_set("my-esp32");
    //set default instance
    mdns_instance_name_set("Jhon's ESP32 Thing");
}
```

mDNS Services

mDNS can advertise information about network services that your device offers. Each service is defined by a few properties.

- `instance_name`: friendly name for your service, like `Jhon's ESP32 Web Server`. If not defined, `default_instance` will be used.
- `service_type`: (required) service type, prepended with underscore. Some common types can be found here.
- `proto`: (required) protocol that the service runs on, prepended with underscore. Example: `_tcp` or `_udp`
- `port`: (required) network port that the service runs on
- `txt`: `{var, val}` array of strings, used to define properties for your service

Example method to add a few services and different properties:

```
void add_mdns_services()
{
    //add our services
    mdns_service_add(NULL, "_http", "_tcp", 80, NULL, 0);
    mdns_service_add(NULL, "_arduino", "_tcp", 3232, NULL, 0);
    mdns_service_add(NULL, "_myservice", "_udp", 1234, NULL, 0);

    //NOTE: services must be added before their properties can be set
    //use custom instance for the web server
    mdns_service_instance_name_set("_http", "_tcp", "Jhon's ESP32 Web Server");

    mdns_txt_item_t serviceTxtData[3] = {
        {"board","esp32"},
        {"u","user"},
        {"p","password"}
    };
    //set txt data for service (will free and replace current data)
    mdns_service_txt_set("_http", "_tcp", serviceTxtData, 3);

    //change service port
    mdns_service_port_set("_myservice", "_udp", 4321);
}
```

mDNS Query

mDNS provides methods for browsing for services and resolving host' s IP/IPv6 addresses.

Results for services are returned as a linked list of `mdns_result_t` objects.

Example method to resolve host IPs:

```
void resolve_mdns_host(const char * host_name)
{
    printf("Query A: %s.local", host_name);

    struct ip4_addr addr;
    addr.addr = 0;

    esp_err_t err = mdns_query_a(host_name, 2000,  &addr);
    if(err){
        if(err == ESP_ERR_NOT_FOUND){
            printf("Host was not found!");
            return;
        }
        printf("Query Failed");
        return;
    }

    printf(IPSTR, IP2STR(&addr));
}
```

Example method to resolve local services:

```
static const char * if_str[] = {"STA", "AP", "ETH", "MAX"};
static const char * ip_protocol_str[] = {"V4", "V6", "MAX"};

void mdns_print_results(mdns_result_t * results){
    mdns_result_t * r = results;
    mdns_ip_addr_t * a = NULL;
    int i = 1, t;
    while(r){
        printf("%d: Interface: %s, Type: %s\n", i++, if_str[r->tcpip_if], ip_protocol_
↪str[r->ip_protocol]);
        if(r->instance_name){
            printf("  PTR : %s\n", r->instance_name);
        }
        if(r->hostname){
            printf("  SRV : %s.local:%u\n", r->hostname, r->port);
        }
        if(r->txt_count){
            printf("  TXT : [%u] ", r->txt_count);
            for(t=0; t<r->txt_count; t++){
```

(下页继续)

(续上页)

```
                printf("%s=%s; ", r->txt[t].key, r->txt[t].value);
            }
            printf("\n");
        }
        a = r->addr;
        while(a){
            if(a->addr.type == MDNS_IP_PROTOCOL_V6){
                printf("  AAAA: " IPV6STR "\n", IPV62STR(a->addr.u_addr.ip6));
            } else {
                printf("  A   : " IPSTR "\n", IP2STR(&(a->addr.u_addr.ip4)));
            }
            a = a->next;
        }
        r = r->next;
    }

}

void find_mdns_service(const char * service_name, const char * proto)
{
    ESP_LOGI(TAG, "Query PTR: %s.%s.local", service_name, proto);

    mdns_result_t * results = NULL;
    esp_err_t err = mdns_query_ptr(service_name, proto, 3000, 20,  &results);
    if(err){
        ESP_LOGE(TAG, "Query Failed");
        return;
    }
    if(!results){
        ESP_LOGW(TAG, "No results found!");
        return;
    }

    mdns_print_results(results);
    mdns_query_results_free(results);
}
```

Example of using the methods above:

```
void my_app_some_method(){
```

(下页继续)

(续上页)

```
    //search for esp32-mdns.local
    resolve_mdns_host("esp32-mdns");

    //search for HTTP servers
    find_mdns_service("_http", "_tcp");
    //or file servers
    find_mdns_service("_smb", "_tcp"); //windows sharing
    find_mdns_service("_afpovertcp", "_tcp"); //apple sharing
    find_mdns_service("_nfs", "_tcp"); //NFS server
    find_mdns_service("_ftp", "_tcp"); //FTP server
    //or networked printer
    find_mdns_service("_printer", "_tcp");
    find_mdns_service("_ipp", "_tcp");
}
```

Application Example

mDNS server/scanner example: protocols/mdns.

API Reference

Header File

- mdns/include/mdns.h

Functions

esp_err_t **mdns_init()**

Initialize mDNS on given interface.

Return

- ESP_OK on success
- ESP_ERR_INVALID_ARG when bad tcpip_if is given
- ESP_ERR_INVALID_STATE when the network returned error
- ESP_ERR_NO_MEM on memory error
- ESP_ERR_WIFI_NOT_INIT when WiFi is not initialized by eps_wifi_init

void **mdns_free**()

Stop and free mDNS server.

esp_err_t **mdns_hostname_set**(**const** char **hostname*)

Set the hostname for mDNS server required if you want to advertise services.

Return

- ESP_OK success
- ESP_ERR_INVALID_ARG Parameter error
- ESP_ERR_NO_MEM memory error

Parameters

- `hostname`: Hostname to set

esp_err_t **mdns_instance_name_set**(**const** char **instance_name*)

Set the default instance name for mDNS server.

Return

- ESP_OK success
- ESP_ERR_INVALID_ARG Parameter error
- ESP_ERR_NO_MEM memory error

Parameters

- `instance_name`: Instance name to set

esp_err_t **mdns_service_add**(**const** char **instance_name*, **const** char **service_type*, **const** char **proto*, uint16_t *port*, *mdns_txt_item_t* *txt*[], size_t *num_items*)

Add service to mDNS server.

Return

- ESP_OK success
- ESP_ERR_INVALID_ARG Parameter error
- ESP_ERR_NO_MEM memory error

Parameters

- `instance_name`: instance name to set. If NULL, global instance name or hostname will be used
- `service_type`: service type (_http, _ftp, etc)
- `proto`: service protocol (_tcp, _udp)
- `port`: service port

- `num_items`: number of items in TXT data
- `txt`: string array of TXT data (eg. {{ "var" ," val" },{ "other" ," 2" }})

esp_err_t **mdns_service_remove**(**const** char *_service_type_, **const** char *_proto_)

Remove service from mDNS server.

Return

- ESP_OK success
- ESP_ERR_INVALID_ARG Parameter error
- ESP_ERR_NOT_FOUND Service not found
- ESP_FAIL unknown error

Parameters

- `service_type`: service type (_http, _ftp, etc)
- `proto`: service protocol (_tcp, _udp)

esp_err_t **mdns_service_instance_name_set**(**const** char *_service_type_, **const** char *_proto_, **const** char *_instance_name_)

Set instance name for service.

Return

- ESP_OK success
- ESP_ERR_INVALID_ARG Parameter error
- ESP_ERR_NOT_FOUND Service not found
- ESP_ERR_NO_MEM memory error

Parameters

- `service_type`: service type (_http, _ftp, etc)
- `proto`: service protocol (_tcp, _udp)
- `instance_name`: instance name to set

esp_err_t **mdns_service_port_set**(**const** char *_service_type_, **const** char *_proto_, uint16_t *port*)

Set service port.

Return

- ESP_OK success
- ESP_ERR_INVALID_ARG Parameter error
- ESP_ERR_NOT_FOUND Service not found

Parameters

- `service_type`: service type (_http, _ftp, etc)
- `proto`: service protocol (_tcp, _udp)
- `port`: service port

esp_err_t **mdns_service_txt_set(const** char **service_type*, **const** char **proto*, *mdns_txt_item_t txt*[], uint8_t *num_items*)

Replace all TXT items for service.

Return

- ESP_OK success
- ESP_ERR_INVALID_ARG Parameter error
- ESP_ERR_NOT_FOUND Service not found
- ESP_ERR_NO_MEM memory error

Parameters

- `service_type`: service type (_http, _ftp, etc)
- `proto`: service protocol (_tcp, _udp)
- `num_items`: number of items in TXT data
- `txt`: array of TXT data (eg. {{ "var" ," val" },{ "other" ," 2" }})

esp_err_t **mdns_service_txt_item_set(const** char **service_type*, **const** char **proto*, **const** char **key*, **const** char **value*)

Set/Add TXT item for service TXT record.

Return

- ESP_OK success
- ESP_ERR_INVALID_ARG Parameter error
- ESP_ERR_NOT_FOUND Service not found
- ESP_ERR_NO_MEM memory error

Parameters

- `service_type`: service type (_http, _ftp, etc)
- `proto`: service protocol (_tcp, _udp)
- `key`: the key that you want to add/update
- `value`: the new value of the key

esp_err_t **mdns_service_txt_item_remove**(**const** char *_service_type_, **const** char *_proto_, **const** char *_key_)

Remove TXT item for service TXT record.

Return

- ESP_OK success
- ESP_ERR_INVALID_ARG Parameter error
- ESP_ERR_NOT_FOUND Service not found
- ESP_ERR_NO_MEM memory error

Parameters

- `service_type`: service type (_http, _ftp, etc)
- `proto`: service protocol (_tcp, _udp)
- `key`: the key that you want to remove

esp_err_t **mdns_service_remove_all**()

Remove and free all services from mDNS server.

Return

- ESP_OK success
- ESP_ERR_INVALID_ARG Parameter error

esp_err_t **mdns_query**(**const** char *_name_, **const** char *_service_type_, **const** char *_proto_, uint16_t _type_, uint32_t _timeout_, size_t _max_results_, *mdns_result_t* **_results_)

Query mDNS for host or service All following query methods are derived from this one.

Return

- ESP_OK success
- ESP_ERR_INVALID_STATE mDNS is not running
- ESP_ERR_NO_MEM memory error
- ESP_ERR_INVALID_ARG timeout was not given

Parameters

- `name`: service instance or host name (NULL for PTR queries)
- `service_type`: service type (_http, _arduino, _ftp etc.) (NULL for host queries)
- `proto`: service protocol (_tcp, _udp, etc.) (NULL for host queries)
- `type`: type of query (MDNS_TYPE_*)
- `timeout`: time in milliseconds to wait for answers.

- `max_results`: maximum results to be collected
- `results`: pointer to the results of the query results must be freed using mdns_query_results_free below

void **mdns_query_results_free**(*mdns_result_t* **results*)

Free query results.

Parameters

- `results`: linked list of results to be freed

esp_err_t **mdns_query_ptr**(**const** char **service_type*, **const** char **proto*, uint32_t *timeout*, size_t *max_results*, *mdns_result_t* ***results*)

Query mDNS for service.

Return

- ESP_OK success
- ESP_ERR_INVALID_STATE mDNS is not running
- ESP_ERR_NO_MEM memory error
- ESP_ERR_INVALID_ARG parameter error

Parameters

- `service_type`: service type (_http, _arduino, _ftp etc.)
- `proto`: service protocol (_tcp, _udp, etc.)
- `timeout`: time in milliseconds to wait for answer.
- `max_results`: maximum results to be collected
- `results`: pointer to the results of the query

esp_err_t **mdns_query_srv**(**const** char **instance_name*, **const** char **service_type*, **const** char **proto*, uint32_t *timeout*, *mdns_result_t* ***result*)

Query mDNS for SRV record.

Return

- ESP_OK success
- ESP_ERR_INVALID_STATE mDNS is not running
- ESP_ERR_NO_MEM memory error
- ESP_ERR_INVALID_ARG parameter error

Parameters

- `instance_name`: service instance name

- `service_type`: service type (_http, _arduino, _ftp etc.)
- `proto`: service protocol (_tcp, _udp, etc.)
- `timeout`: time in milliseconds to wait for answer.
- `result`: pointer to the result of the query

esp_err_t **mdns_query_txt**(**const** char **instance_name*, **const** char **service_type*, **const** char **proto*, uint32_t *timeout*, *mdns_result_t* ***result*)

Query mDNS for TXT record.

Return

- ESP_OK success
- ESP_ERR_INVALID_STATE mDNS is not running
- ESP_ERR_NO_MEM memory error
- ESP_ERR_INVALID_ARG parameter error

Parameters

- `instance_name`: service instance name
- `service_type`: service type (_http, _arduino, _ftp etc.)
- `proto`: service protocol (_tcp, _udp, etc.)
- `timeout`: time in milliseconds to wait for answer.
- `result`: pointer to the result of the query

esp_err_t **mdns_query_a**(**const** char **host_name*, uint32_t *timeout*, ip4_addr_t **addr*)

Query mDNS for A record.

Return

- ESP_OK success
- ESP_ERR_INVALID_STATE mDNS is not running
- ESP_ERR_NO_MEM memory error
- ESP_ERR_INVALID_ARG parameter error

Parameters

- `host_name`: host name to look for
- `timeout`: time in milliseconds to wait for answer.
- `addr`: pointer to the resulting IP4 address

esp_err_t **mdns_query_aaaa**(**const** char **host_name*, uint32_t *timeout*, ip6_addr_t **addr*)

Query mDNS for A record.

Return

- ESP_OK success
- ESP_ERR_INVALID_STATE mDNS is not running
- ESP_ERR_NO_MEM memory error
- ESP_ERR_INVALID_ARG parameter error

Parameters

- `host_name`: host name to look for
- `timeout`: time in milliseconds to wait for answer. If 0, max_results needs to be defined
- `addr`: pointer to the resulting IP6 address

esp_err_t **mdns_handle_system_event**(void **ctx*, system_event_t **event*)

System event handler This method controls the service state on all active interfaces and applications are required to call it from the system event handler for normal operation of mDNS service.

Parameters

- `ctx`: The system event context
- `event`: The system event

Structures

struct mdns_txt_item_t

mDNS basic text item structure Used in mdns_service_add()

Public Members

char ***key**

item key name

char ***value**

item value string

struct mdns_ip_addr_s

mDNS query linked list IP item

Public Members

ip_addr_t **addr**
: IP address

struct *mdns_ip_addr_s* ***next**
: next IP, or NULL for the last IP in the list

struct mdns_result_s
: mDNS query result structure

Public Members

struct *mdns_result_s* ***next**
: next result, or NULL for the last result in the list

tcpip_adapter_if_t **tcpip_if**
: interface on which the result came (AP/STA/ETH)

mdns_ip_protocol_t **ip_protocol**
: ip_protocol type of the interface (v4/v6)

char ***instance_name**
: instance name

char ***hostname**
: hostname

uint16_t **port**
: service port

mdns_txt_item_t ***txt**
: txt record

size_t **txt_count**
: number of txt items

mdns_ip_addr_t ***addr**
: linked list of IP addreses found

Macros

MDNS_TYPE_A

MDNS_TYPE_PTR

MDNS_TYPE_TXT

MDNS_TYPE_AAAA

MDNS_TYPE_SRV

MDNS_TYPE_OPT

MDNS_TYPE_NSEC

MDNS_TYPE_ANY

Type Definitions

typedef struct *mdns_ip_addr_s* mdns_ip_addr_t

mDNS query linked list IP item

typedef struct *mdns_result_s* mdns_result_t

mDNS query result structure

Enumerations

enum mdns_ip_protocol_t

mDNS enum to specify the ip_protocol type

Values:

MDNS_IP_PROTOCOL_V4

MDNS_IP_PROTOCOL_V6

MDNS_IP_PROTOCOL_MAX

3.4.2 ESP-TLS

Overview

The ESP-TLS component provides a simplified API interface for accessing the commonly used TLS functionality. It supports common scenarios like CA certification validation, SNI, ALPN negotiation, non-blocking connection among others. All the configuration can be specified in the esp_tls_cfg_t data structure. Once done, TLS communication can be conducted using the following APIs: * esp_tls_conn_new(): for opening a new TLS connection * esp_tls_conn_read/write(): for reading/writing from the connection * esp_tls_conn_delete(): for freeing up the connection Any application layer protocol like HTTP1, HTTP2 etc can be executed on top of this layer.

Application Example

Simple HTTPS example that uses ESP-TLS to establish a secure socket connection: protocols/https_request.

API Reference

Header File

- esp-tls/esp_tls.h

Functions

esp_tls_t ***esp_tls_conn_new**(**const** char **hostname*, int *hostlen*, int *port*, **const** *esp_tls_cfg_t* **cfg*)

Create a new blocking TLS/SSL connection.

This function establishes a TLS/SSL connection with the specified host in blocking manner.

Return pointer to esp_tls_t, or NULL if connection couldn't be opened.

Parameters

- `hostname`: Hostname of the host.
- `hostlen`: Length of hostname.
- `port`: Port number of the host.
- `cfg`: TLS configuration as esp_tls_cfg_t. If you wish to open non-TLS connection, keep this NULL. For TLS connection, a pass pointer to esp_tls_cfg_t. At a minimum, this structure should be zero-initialized.

esp_tls_t ***esp_tls_conn_http_new**(**const** char **url*, **const** *esp_tls_cfg_t* **cfg*)

Create a new blocking TLS/SSL connection with a given "HTTP" url.

The behaviour is same as esp_tls_conn_new() API. However this API accepts host's url.

Return pointer to esp_tls_t, or NULL if connection couldn't be opened.

Parameters

- `url`: url of host.
- `cfg`: TLS configuration as esp_tls_cfg_t. If you wish to open non-TLS connection, keep this NULL. For TLS connection, a pass pointer to 'esp_tls_cfg_t'. At a minimum, this structure should be zero-initialized.

int **esp_tls_conn_new_async**(**const** char **hostname*, int *hostlen*, int *port*, **const** *esp_tls_cfg_t* **cfg*, *esp_tls_t* **tls*)

Create a new non-blocking TLS/SSL connection.

This function initiates a non-blocking TLS/SSL connection with the specified host, but due to its non-blocking nature, it doesn't wait for the connection to get established.

Return

- -1 If connection establishment fails.
- 0 If connection establishment is in progress.
- 1 If connection establishment is successful.

Parameters

- `hostname`: Hostname of the host.
- `hostlen`: Length of hostname.
- `port`: Port number of the host.
- `cfg`: TLS configuration as esp_tls_cfg_t. `non_block` member of this structure should be set to be true.
- `tls`: pointer to esp-tls as esp-tls handle.

int **esp_tls_conn_http_new_async**(**const** char *_url_, **const** _esp_tls_cfg_t_ *_cfg_, _esp_tls_t_ *_tls_)

Create a new non-blocking TLS/SSL connection with a given "HTTP" url.

The behaviour is same as esp_tls_conn_new() API. However this API accepts host's url.

Return

- -1 If connection establishment fails.
- 0 If connection establishment is in progress.
- 1 If connection establishment is successful.

Parameters

- `url`: url of host.
- `cfg`: TLS configuration as esp_tls_cfg_t.
- `tls`: pointer to esp-tls as esp-tls handle.

static ssize_t **esp_tls_conn_write**(_esp_tls_t_ *_tls_, **const** void *_data_, size_t _datalen_)

Write from buffer 'data' into specified tls connection.

Return

- >0 if write operation was successful, the return value is the number of bytes actually written to the TLS/SSL connection.
- 0 if write operation was not successful. The underlying connection was closed.
- <0 if write operation was not successful, because either an error occured or an action must be taken by the calling process.

Parameters

- `tls`: pointer to esp-tls as esp-tls handle.
- `data`: Buffer from which data will be written.
- `datalen`: Length of data buffer.

`static` ssize_t **esp_tls_conn_read**(*esp_tls_t* *tls, void *data, size_t datalen)

Read from specified tls connection into the buffer ‘data’.

Return

- >0 if read operation was successful, the return value is the number of bytes actually read from the TLS/SSL connection.
- 0 if read operation was not successful. The underlying connection was closed.
- <0 if read operation was not successful, because either an error occured or an action must be taken by the calling process.

Parameters

- `tls`: pointer to esp-tls as esp-tls handle.
- `data`: Buffer to hold read data.
- `datalen`: Length of data buffer.

void **esp_tls_conn_delete**(*esp_tls_t* *tls)

Close the TLS/SSL connection and free any allocated resources.

This function should be called to close each tls connection opened with esp_tls_conn_new() or esp_tls_conn_http_new() APIs.

Parameters

- `tls`: pointer to esp-tls as esp-tls handle.

size_t **esp_tls_get_bytes_avail**(*esp_tls_t* *tls)

Return the number of application data bytes remaining to be read from the current record.

This API is a wrapper over mbedtls’s mbedtls_ssl_get_bytes_avail() API.

Return

- -1 in case of invalid arg
- bytes available in the application data record read buffer

Parameters

- `tls`: pointer to esp-tls as esp-tls handle.

esp_err_t **esp_tls_init_global_ca_store()**

Create a global CA store, initially empty.

This function should be called if the application wants to use the same CA store for multiple connections. This function initialises the global CA store which can be then set by calling esp_tls_set_global_ca_store(). To be effective, this function must be called before any call to esp_tls_set_global_ca_store().

Return

- ESP_OK if creating global CA store was successful.
- ESP_ERR_NO_MEM if an error occured when allocating the mbedTLS resources.

esp_err_t **esp_tls_set_global_ca_store(const** unsigned char ***cacert_pem_buf**, **const** unsigned int *cacert_pem_bytes*)

Set the global CA store with the buffer provided in pem format.

This function should be called if the application wants to set the global CA store for multiple connections i.e. to add the certificates in the provided buffer to the certificate chain. This function implicitly calls esp_tls_init_global_ca_store() if it has not already been called. The application must call this function before calling esp_tls_conn_new().

Return

- ESP_OK if adding certificates was successful.
- Other if an error occured or an action must be taken by the calling process.

Parameters

- `cacert_pem_buf`: Buffer which has certificates in pem format. This buffer is used for creating a global CA store, which can be used by other tls connections.
- `cacert_pem_bytes`: Length of the buffer.

mbedtls_x509_crt ***esp_tls_get_global_ca_store()**

Get the pointer to the global CA store currently being used.

The application must first call esp_tls_set_global_ca_store(). Then the same CA store could be used by the application for APIs other than *esp_tls*.

Note Modifying the pointer might cause a failure in verifying the certificates.

Return

- Pointer to the global CA store currently being used if successful.
- NULL if there is no global CA store set.

void **esp_tls_free_global_ca_store()**

Free the global CA store currently being used.

The memory being used by the global CA store to store all the parsed certificates is freed up. The application can call this API if it no longer needs the global CA store.

Structures

struct tls_keep_alive_cfg

Keep alive parameters structure.

Public Members

bool **keep_alive_enable**

Enable keep-alive timeout

int **keep_alive_idle**

Keep-alive idle time (second)

int **keep_alive_interval**

Keep-alive interval time (second)

int **keep_alive_count**

Keep-alive packet retry send count

struct esp_tls_cfg

ESP-TLS configuration parameters.

Public Members

const char ****alpn_protos**

Application protocols required for HTTP2. If HTTP2/ALPN support is required, a list of protocols that should be negotiated. The format is length followed by protocol name. For the most common cases the following is ok: "\x02h2"

- where the first '2' is the length of the protocol and
- the subsequent 'h2' is the protocol name

const unsigned char ***cacert_pem_buf**

Certificate Authority's certificate in a buffer. This buffer should be NULL terminated

unsigned int **cacert_pem_bytes**

Size of Certificate Authority certificate pointed to by cacert_pem_buf

const unsigned char ***clientcert_pem_buf**

Client certificate in a buffer This buffer should be NULL terminated

unsigned int **clientcert_pem_bytes**

Size of client certificate pointed to by clientcert_pem_buf

const unsigned char ***clientkey_pem_buf**

Client key in a buffer This buffer should be NULL terminated

unsigned int **clientkey_pem_bytes**

Size of client key pointed to by clientkey_pem_buf

const unsigned char ***clientkey_password**

Client key decryption password string

unsigned int **clientkey_password_len**

String length of the password pointed to by clientkey_password

bool **non_block**

Configure non-blocking mode. If set to true the underneath socket will be configured in non blocking mode after tls session is established

int **timeout_ms**

Network timeout in milliseconds

bool **use_global_ca_store**

Use a global ca_store for all the connections in which this bool is set.

const char ***common_name**

If non-NULL, server certificate CN must match this name. If NULL, server certificate CN must match hostname.

bool **skip_common_name**

Skip any validation of server certificate CN field

tls_keep_alive_cfg_t ***keep_alive_cfg**

Enable TCP keep-alive timeout for SSL connection

struct esp_tls

ESP-TLS Connection Handle.

Public Members

mbedtls_ssl_context **ssl**

TLS/SSL context

mbedtls_entropy_context **entropy**

mbedTLS entropy context structure

mbedtls_ctr_drbg_context **ctr_drbg**

mbedTLS ctr drbg context structure. CTR_DRBG is deterministic random bit generation based on AES-256

mbedtls_ssl_config **conf**
: TLS/SSL configuration to be shared between mbedtls_ssl_context structures

mbedtls_net_context **server_fd**
: mbedTLS wrapper type for sockets

mbedtls_x509_crt **cacert**
: Container for the X.509 CA certificate

mbedtls_x509_crt ***cacert_ptr**
: Pointer to the cacert being used.

mbedtls_x509_crt **clientcert**
: Container for the X.509 client certificate

mbedtls_pk_context **clientkey**
: Container for the private key of the client certificate

int **sockfd**
: Underlying socket file descriptor.

ssize_t (***read**)(**struct** *esp_tls* *tls, char *data, size_t datalen)
: Callback function for reading data from TLS/SSL connection.

ssize_t (***write**)(**struct** *esp_tls* *tls, **const** char *data, size_t datalen)
: Callback function for writing data to TLS/SSL connection.

esp_tls_conn_state_t **conn_state**
: ESP-TLS Connection state

fd_set **rset**
: read file descriptors

fd_set **wset**
: write file descriptors

bool **is_tls**
: indicates connection type (TLS or NON-TLS)

Type Definitions

typedef enum *esp_tls_conn_state* **esp_tls_conn_state_t**
: ESP-TLS Connection State.

typedef struct *tls_keep_alive_cfg* **tls_keep_alive_cfg_t**
: Keep alive parameters structure.

typedef struct *esp_tls_cfg* **esp_tls_cfg_t**
: ESP-TLS configuration parameters.

typedef struct *esp_tls* esp_tls_t

ESP-TLS Connection Handle.

Enumerations

enum esp_tls_conn_state

ESP-TLS Connection State.

Values:

ESP_TLS_INIT = 0

ESP_TLS_CONNECTING

ESP_TLS_HANDSHAKE

ESP_TLS_FAIL

ESP_TLS_DONE

3.4.3 ESP HTTP Client

Overview

esp_http_client provides an API for making HTTP/S requests from ESP-IDF programs. The steps to use this API for an HTTP request are:

- *esp_http_client_init()*: To use the HTTP client, the first thing we must do is create an esp_http_client by pass into this function with the *esp_http_client_config_t* configurations. Which configuration values we do not define, the library will use default.
- *esp_http_client_perform()*: The esp_http_client argument created from the init function is needed. This function performs all operations of the esp_http_client, from opening the connection, sending data, downloading data and closing the connection if necessary. All related events will be invoked in the event_handle (defined by *esp_http_client_config_t*). This function performs its job and blocks the current task until it' s done
- *esp_http_client_cleanup()*: After completing our **esp_http_client's** task, this is the last function to be called. It will close the connection (if any) and free up all the memory allocated to the HTTP client

Application Example

```
esp_err_t _http_event_handle(esp_http_client_event_t *evt)
{
    switch(evt->event_id) {
```

(下页继续)

(续上页)

```
        case HTTP_EVENT_ERROR:
            ESP_LOGI(TAG, "HTTP_EVENT_ERROR");
            break;
        case HTTP_EVENT_ON_CONNECTED:
            ESP_LOGI(TAG, "HTTP_EVENT_ON_CONNECTED");
            break;
        case HTTP_EVENT_HEADER_SENT:
            ESP_LOGI(TAG, "HTTP_EVENT_HEADER_SENT");
            break;
        case HTTP_EVENT_ON_HEADER:
            ESP_LOGI(TAG, "HTTP_EVENT_ON_HEADER");
            printf("%.*s", evt->data_len, (char*)evt->data);
            break;
        case HTTP_EVENT_ON_DATA:
            ESP_LOGI(TAG, "HTTP_EVENT_ON_DATA, len=%d", evt->data_len);
            if (!esp_http_client_is_chunked_response(evt->client)) {
                printf("%.*s", evt->data_len, (char*)evt->data);
            }

            break;
        case HTTP_EVENT_ON_FINISH:
            ESP_LOGI(TAG, "HTTP_EVENT_ON_FINISH");
            break;
        case HTTP_EVENT_DISCONNECTED:
            ESP_LOGI(TAG, "HTTP_EVENT_DISCONNECTED");
            break;
    }
    return ESP_OK;
}

esp_http_client_config_t config = {
   .url = "http://httpbin.org/redirect/2",
   .event_handler = _http_event_handle,
};
esp_http_client_handle_t client = esp_http_client_init(&config);
esp_err_t err = esp_http_client_perform(client);

if (err == ESP_OK) {
   ESP_LOGI(TAG, "Status = %d, content_length = %d",
            esp_http_client_get_status_code(client),
```

(下页继续)

(续上页)

```
            esp_http_client_get_content_length(client));
}
esp_http_client_cleanup(client);
```

Persistent Connections

Persistent connections means that the HTTP client can re-use the same connection for several transfers. If the server does not request to close the connection with the `Connection: close` header, the new transfer with sample ip address, port, and protocol.

To allow the HTTP client to take full advantage of persistent connections, you should do as many of your file transfers as possible using the same handle.

Persistent Connections example

```
esp_err_t err;
esp_http_client_config_t config = {
    .url = "http://httpbin.org/get",
};
esp_http_client_handle_t client = esp_http_client_init(&config);
// first request
err = esp_http_client_perform(client);

// second request
esp_http_client_set_url(client, "http://httpbin.org/anything")
esp_http_client_set_method(client, HTTP_METHOD_DELETE);
esp_http_client_set_header(client, "HeaderKey", "HeaderValue");
err = esp_http_client_perform(client);

esp_http_client_cleanup(client);
```

HTTPS

The HTTP client supports SSL connections using **mbedtls**, with the **url** configuration starting with `https` scheme (or `transport_type = HTTP_TRANSPORT_OVER_SSL`). HTTPS support can be configured via :ref:CONFIG_ENABLE_HTTPS (enabled by default)..

注解: By providing information using HTTPS, the library will use the SSL transport type to connect to the server. If you want to verify server, then need to provide additional certificate in PEM format, and provide

to `cert_pem` in `esp_http_client_config_t`

HTTPS example

```
static void https()
{
    esp_http_client_config_t config = {
        .url = "https://www.howsmyssl.com",
        .cert_pem = howsmyssl_com_root_cert_pem_start,
    };
    esp_http_client_handle_t client = esp_http_client_init(&config);
    esp_err_t err = esp_http_client_perform(client);

    if (err == ESP_OK) {
        ESP_LOGI(TAG, "Status = %d, content_length = %d",
                esp_http_client_get_status_code(client),
                esp_http_client_get_content_length(client));
    }
    esp_http_client_cleanup(client);
}
```

HTTP Stream

Some applications need to open the connection and control the reading of the data in an active manner. the HTTP client supports some functions to make this easier, of course, once you use these functions you should not use the *esp_http_client_perform()* function with that handle, and *esp_http_client_init()* alway to called first to get the handle. Perform that functions in the order below:

- *esp_http_client_init()*: to create and handle
- `esp_http_client_set_*` or `esp_http_client_delete_*`: to modify the http connection information (optional)
- *esp_http_client_open()*: Open the http connection with `write_len` parameter, `write_len=0` if we only need read
- *esp_http_client_write()*: Upload data, max length equal to `write_len` of *esp_http_client_open()* function. We may not need to call it if `write_len=0`
- *esp_http_client_fetch_headers()*: After sending the headers and write data (if any) to the server, this function will read the HTTP Server response headers. Calling this function will return the `content-length` from the Server, and we can call *esp_http_client_get_status_code()* for the HTTP status of the connection.

- *esp_http_client_read()*: Now, we can read the HTTP stream by this function.
- *esp_http_client_close()*: We should the connection after finish
- *esp_http_client_cleanup()*: And release the resources

Perform HTTP request as Stream reader

Check the example function `http_perform_as_stream_reader` at protocols/esp_http_client.

HTTP Authentication

The HTTP client supports both **Basic** and **Digest** Authentication. By providing usernames and passwords in `url` or in the `username`, `password` of config entry. And with `auth_type = HTTP_AUTH_TYPE_BASIC`, the HTTP client takes only 1 perform to pass the authentication process. If `auth_type = HTTP_AUTH_TYPE_NONE`, but there are `username` and `password` in the configuration, the HTTP client takes 2 performs. The first time it connects to the server and receives the UNAUTHORIZED header. Based on this information, it will know which authentication method to choose, and perform it on the second.

Config authentication example with URI

```
esp_http_client_config_t config = {
    .url = "http://user:passwd@httpbin.org/basic-auth/user/passwd",
    .auth_type = HTTP_AUTH_TYPE_BASIC,
};
```

Config authentication example with username, password entry

```
esp_http_client_config_t config = {
    .url = "http://httpbin.org/basic-auth/user/passwd",
    .username = "user",
    .password = "passwd",
    .auth_type = HTTP_AUTH_TYPE_BASIC,
};
```

HTTP Client example: protocols/esp_http_client.

API Reference

Header File

- esp_http_client/include/esp_http_client.h

Functions

esp_http_client_handle_t **esp_http_client_init**(**const** *esp_http_client_config_t* **config*)

Start a HTTP session This function must be the first function to call, and it returns a esp_http_client_handle_t that you must use as input to other functions in the interface. This call MUST have a corresponding call to esp_http_client_cleanup when the operation is complete.

Return

- `esp_http_client_handle_t`
- NULL if any errors

Parameters

- `config`: The configurations, see `http_client_config_t`

esp_err_t **esp_http_client_perform**(*esp_http_client_handle_t client*)

Invoke this function after `esp_http_client_init` and all the options calls are made, and will perform the transfer as described in the options. It must be called with the same esp_http_client_handle_t as input as the esp_http_client_init call returned. esp_http_client_perform performs the entire request in either blocking or non-blocking manner. By default, the API performs request in a blocking manner and returns when done, or if it failed, and in non-blocking manner, it returns if EAGAIN/EWOULDBLOCK or EINPROGRESS is encountered, or if it failed. And in case of non-blocking request, the user may call this API multiple times unless request & response is complete or there is a failure. To enable non-blocking esp_http_client_perform(), `is_async` member of *esp_http_client_config_t* must be set while making a call to esp_http_client_init() API. You can do any amount of calls to esp_http_client_perform while using the same esp_http_client_handle_t. The underlying connection may be kept open if the server allows it. If you intend to transfer more than one file, you are even encouraged to do so. esp_http_client will then attempt to re-use the same connection for the following transfers, thus making the operations faster, less CPU intense and using less network resources. Just note that you will have to use `esp_http_client_set_**` between the invokes to set options for the following esp_http_client_perform.

Note You must never call this function simultaneously from two places using the same client handle. Let the function return first before invoking it another time. If you want parallel transfers, you must use several esp_http_client_handle_t. This function include `esp_http_client_open` -> `esp_http_client_write` -> `esp_http_client_fetch_headers` -> `esp_http_client_read` (and option) `esp_http_client_close`.

Return

- ESP_OK on successful
- ESP_FAIL on error

Parameters

- `client`: The esp_http_client handle

esp_err_t **esp_http_client_set_url**(*esp_http_client_handle_t client*, **const** char **url*)

Set URL for client, when performing this behavior, the options in the URL will replace the old ones.

Return

- ESP_OK
- ESP_FAIL

Parameters

- `client`: The esp_http_client handle
- `url`: The url

esp_err_t **esp_http_client_set_post_field**(*esp_http_client_handle_t client*, **const** char **data*, int *len*)

Set post data, this function must be called before `esp_http_client_perform`. Note: The data parameter passed to this function is a pointer and this function will not copy the data.

Return

- ESP_OK
- ESP_FAIL

Parameters

- `client`: The esp_http_client handle
- `data`: post data pointer
- `len`: post length

int **esp_http_client_get_post_field**(*esp_http_client_handle_t client*, char ***data*)

Get current post field information.

Return Size of post data

Parameters

- `client`: The client
- `data`: Point to post data pointer

esp_err_t **esp_http_client_set_header**(*esp_http_client_handle_t client*, **const** char ***key*, **const** char ***value*)

Set http request header, this function must be called after esp_http_client_init and before any perform function.

Return

- ESP_OK
- ESP_FAIL

Parameters

- `client`: The esp_http_client handle
- `key`: The header key
- `value`: The header value

esp_err_t **esp_http_client_get_header**(*esp_http_client_handle_t client*, **const** char ***key*, char ****value*)

Get http request header. The value parameter will be set to NULL if there is no header which is same as the key specified, otherwise the address of header value will be assigned to value parameter. This function must be called after `esp_http_client_init`.

Return

- ESP_OK
- ESP_FAIL

Parameters

- `client`: The esp_http_client handle
- `key`: The header key
- `value`: The header value

esp_err_t **esp_http_client_get_username**(*esp_http_client_handle_t client*, char ****value*)

Get http request username. The address of username buffer will be assigned to value parameter. This function must be called after `esp_http_client_init`.

Return

- ESP_OK
- ESP_ERR_INVALID_ARG

Parameters

- `client`: The esp_http_client handle
- `value`: The username value

esp_err_t **esp_http_client_set_username**(*esp_http_client_handle_t client*, **const** char **username*)

Set http request username. The value of username parameter will be assigned to username buffer. If the username parameter is NULL then username buffer will be freed.

Return

- ESP_OK
- ESP_ERR_INVALID_ARG

Parameters

- `client`: The esp_http_client handle
- `username`: The username value

esp_err_t **esp_http_client_get_password**(*esp_http_client_handle_t client*, char ***value*)

Get http request password. The address of password buffer will be assigned to value parameter. This function must be called after `esp_http_client_init`.

Return

- ESP_OK
- ESP_ERR_INVALID_ARG

Parameters

- `client`: The esp_http_client handle
- `value`: The password value

esp_err_t **esp_http_client_set_password**(*esp_http_client_handle_t client*, char **password*)

Set http request password. The value of password parameter will be assigned to password buffer. If the password parameter is NULL then password buffer will be freed.

Return

- ESP_OK
- ESP_ERR_INVALID_ARG

Parameters

- `client`: The esp_http_client handle
- `password`: The password value

esp_err_t **esp_http_client_set_method**(*esp_http_client_handle_t client*, *esp_http_client_method_t method*)

Set http request method.

Return

- ESP_OK
- ESP_ERR_INVALID_ARG

Parameters

- `client`: The esp_http_client handle
- `method`: The method

esp_err_t **esp_http_client_delete_header**(*esp_http_client_handle_t client*, const char **key*)

Delete http request header.

Return

- ESP_OK
- ESP_FAIL

Parameters

- `client`: The esp_http_client handle
- `key`: The key

esp_err_t **esp_http_client_open**(*esp_http_client_handle_t client*, int *write_len*)

This function will be open the connection, write all header strings and return.

Return

- ESP_OK
- ESP_FAIL

Parameters

- `client`: The esp_http_client handle
- `write_len`: HTTP Content length need to write to the server

int **esp_http_client_write**(*esp_http_client_handle_t client*, const char **buffer*, int *len*)

This function will write data to the HTTP connection previously opened by esp_http_client_open()

Return

- (-1) if any errors
- Length of data written

Parameters

- `client`: The esp_http_client handle

- `buffer`: The buffer
- `len`: This value must not be larger than the write_len parameter provided to esp_http_client_open()

int **esp_http_client_fetch_headers**(*esp_http_client_handle_t client*)

This function need to call after esp_http_client_open, it will read from http stream, process all receive headers.

Return

- (0) if stream doesn' t contain content-length header, or chunked encoding (checked by `esp_http_client_is_chunked` response)
- (-1: ESP_FAIL) if any errors
- Download data length defined by content-length header

Parameters

- `client`: The esp_http_client handle

bool **esp_http_client_is_chunked_response**(*esp_http_client_handle_t client*)

Check response data is chunked.

Return true or false

Parameters

- `client`: The esp_http_client handle

int **esp_http_client_read**(*esp_http_client_handle_t client*, char **buffer*, int *len*)

Read data from http stream.

Return

- (-1) if any errors
- Length of data was read

Parameters

- `client`: The esp_http_client handle
- `buffer`: The buffer
- `len`: The length

int **esp_http_client_get_status_code**(*esp_http_client_handle_t client*)

Get http response status code, the valid value if this function invoke after `esp_http_client_perform`

Return Status code

Parameters

- `client`: The esp_http_client handle

int **esp_http_client_get_content_length**(*esp_http_client_handle_t client*)

Get http response content length (from header Content-Length) the valid value if this function invoke after `esp_http_client_perform`

Return

- (-1) Chunked transfer
- Content-Length value as bytes

Parameters

- `client`: The esp_http_client handle

esp_err_t **esp_http_client_close**(*esp_http_client_handle_t client*)

Close http connection, still kept all http request resources.

Return

- ESP_OK
- ESP_FAIL

Parameters

- `client`: The esp_http_client handle

esp_err_t **esp_http_client_cleanup**(*esp_http_client_handle_t client*)

This function must be the last function to call for an session. It is the opposite of the esp_http_client_init function and must be called with the same handle as input that a esp_http_client_init call returned. This might close all connections this handle has used and possibly has kept open until now. Don' t call this function if you intend to transfer more files, re-using handles is a key to good performance with esp_http_client.

Return

- ESP_OK
- ESP_FAIL

Parameters

- `client`: The esp_http_client handle

esp_http_client_transport_t **esp_http_client_get_transport_type**(*esp_http_client_handle_t client*)

Get transport type.

Return

- HTTP_TRANSPORT_UNKNOWN
- HTTP_TRANSPORT_OVER_TCP
- HTTP_TRANSPORT_OVER_SSL

Parameters

- `client`: The esp_http_client handle

esp_err_t **esp_http_client_set_redirection**(*esp_http_client_handle_t client*)

Set redirection URL. When received the 30x code from the server, the client stores the redirect URL provided by the server. This function will set the current URL to redirect to enable client to execute the redirection request.

Return

- ESP_OK
- ESP_FAIL

Parameters

- `client`: The esp_http_client handle

void **esp_http_client_add_auth**(*esp_http_client_handle_t client*)

On receiving HTTP Status code 401, this API can be invoked to add authorization information.

Note There is a possibility of receiving body message with redirection status codes, thus make sure to flush off body data after calling this API.

Parameters

- `client`: The esp_http_client handle

bool **esp_http_client_is_complete_data_received**(*esp_http_client_handle_t client*)

Checks if entire data in the response has been read without any error.

Return

- true
- false

Parameters

- `client`: The esp_http_client handle

Structures

struct esp_http_client_event

HTTP Client events data.

Public Members

esp_http_client_event_id_t **event_id**

event_id, to know the cause of the event

esp_http_client_handle_t **client**

esp_http_client_handle_t context

void ***data**

data of the event

int **data_len**

data length of data

void ***user_data**

user_data context, from *esp_http_client_config_t* user_data

char ***header_key**

For HTTP_EVENT_ON_HEADER event_id, it's store current http header key

char ***header_value**

For HTTP_EVENT_ON_HEADER event_id, it's store current http header value

struct esp_http_client_config_t

HTTP configuration.

Public Members

const char ***url**

HTTP URL, the information on the URL is most important, it overrides the other fields below, if any

const char ***host**

Domain or IP as string

int **port**

Port to connect, default depend on esp_http_client_transport_t (80 or 443)

const char ***username**

Using for Http authentication

const char ***password**

Using for Http authentication

esp_http_client_auth_type_t **auth_type**

Http authentication type, see `esp_http_client_auth_type_t`

const char ***path**

HTTP Path, if not set, default is `/`

const char ***query**

HTTP query

const char ***cert_pem**

SSL server certification, PEM format as string, if the client requires to verify server

const char ***client_cert_pem**

SSL client certification, PEM format as string, if the server requires to verify client

const char ***client_key_pem**

SSL client key, PEM format as string, if the server requires to verify client

const char ***user_agent**

The User Agent string to send with HTTP requests

esp_http_client_method_t **method**

HTTP Method

int **timeout_ms**

Network timeout in milliseconds

bool **disable_auto_redirect**

Disable HTTP automatic redirects

int **max_redirection_count**

Max redirection number, using default value if zero

http_event_handle_cb **event_handler**

HTTP Event Handle

esp_http_client_transport_t **transport_type**

HTTP transport type, see `esp_http_client_transport_t`

int **buffer_size**

HTTP buffer size (both send and receive)

void ***user_data**

HTTP user_data context

bool **is_async**

Set asynchronous mode, only supported with HTTPS for now

bool **use_global_ca_store**

Use a global ca_store for all the connections in which this bool is set.

bool **skip_cert_common_name_check**

Skip any validation of server certificate CN field

bool **keep_alive_enable**

Enable keep-alive timeout

int **keep_alive_idle**

Keep-alive idle time. Default is 5 (second)

int **keep_alive_interval**

Keep-alive interval time. Default is 5 (second)

int **keep_alive_count**

Keep-alive packet retry send count. Default is 3 counts

Macros

DEFAULT_HTTP_BUF_SIZE

ESP_ERR_HTTP_BASE

Starting number of HTTP error codes

ESP_ERR_HTTP_MAX_REDIRECT

The error exceeds the number of HTTP redirects

ESP_ERR_HTTP_CONNECT

Error open the HTTP connection

ESP_ERR_HTTP_WRITE_DATA

Error write HTTP data

ESP_ERR_HTTP_FETCH_HEADER

Error read HTTP header from server

ESP_ERR_HTTP_INVALID_TRANSPORT

There are no transport support for the input scheme

ESP_ERR_HTTP_CONNECTING

HTTP connection hasn’ t been established yet

ESP_ERR_HTTP_EAGAIN

Mapping of errno EAGAIN to esp_err_t

Type Definitions

typedef struct esp_http_client ***esp_http_client_handle_t**

typedef struct *esp_http_client_event* ***esp_http_client_event_handle_t**

typedef struct *esp_http_client_event* **esp_http_client_event_t**

HTTP Client events data.

typedef *esp_err_t* (***http_event_handle_cb**)(*esp_http_client_event_t* *evt)

Enumerations

enum esp_http_client_event_id_t

HTTP Client events id.

Values:

HTTP_EVENT_ERROR = 0

This event occurs when there are any errors during execution

HTTP_EVENT_ON_CONNECTED

Once the HTTP has been connected to the server, no data exchange has been performed

HTTP_EVENT_HEADER_SENT

After sending all the headers to the server

HTTP_EVENT_ON_HEADER

Occurs when receiving each header sent from the server

HTTP_EVENT_ON_DATA

Occurs when receiving data from the server, possibly multiple portions of the packet

HTTP_EVENT_ON_FINISH

Occurs when finish a HTTP session

HTTP_EVENT_DISCONNECTED

The connection has been disconnected

enum esp_http_client_transport_t

HTTP Client transport.

Values:

HTTP_TRANSPORT_UNKNOWN = 0x0

Unknown

HTTP_TRANSPORT_OVER_TCP

Transport over tcp

HTTP_TRANSPORT_OVER_SSL

Transport over ssl

enum esp_http_client_method_t

HTTP method.

Values:

`HTTP_METHOD_GET` = 0
HTTP GET Method

`HTTP_METHOD_POST`
HTTP POST Method

`HTTP_METHOD_PUT`
HTTP PUT Method

`HTTP_METHOD_PATCH`
HTTP PATCH Method

`HTTP_METHOD_DELETE`
HTTP DELETE Method

`HTTP_METHOD_HEAD`
HTTP HEAD Method

`HTTP_METHOD_NOTIFY`
HTTP NOTIFY Method

`HTTP_METHOD_SUBSCRIBE`
HTTP SUBSCRIBE Method

`HTTP_METHOD_UNSUBSCRIBE`
HTTP UNSUBSCRIBE Method

`HTTP_METHOD_OPTIONS`
HTTP OPTIONS Method

`HTTP_METHOD_MAX`

`enum esp_http_client_auth_type_t`
HTTP Authentication type.

Values:

`HTTP_AUTH_TYPE_NONE` = 0
No authention

`HTTP_AUTH_TYPE_BASIC`
HTTP Basic authentication

`HTTP_AUTH_TYPE_DIGEST`
HTTP Disgest authentication

`enum HttpStatus_Code`
Enum for the HTTP status codes.

Values:

`HttpStatus_Ok` = 200

`HttpStatus_MultipleChoices` = 300

`HttpStatus_MovedPermanently` = 301

`HttpStatus_Found` = 302

`HttpStatus_Unauthorized` = 401

3.4.4 HTTP Server

Overview

The HTTP Server component provides an ability for running a lightweight web server on ESP32. Following are detailed steps to use the API exposed by HTTP Server:

- *`httpd_start()`*: Creates an instance of HTTP server, allocate memory/resources for it depending upon the specified configuration and outputs a handle to the server instance. The server has both, a listening socket (TCP) for HTTP traffic, and a control socket (UDP) for control signals, which are selected in a round robin fashion in the server task loop. The task priority and stack size are configurable during server instance creation by passing httpd_config_t structure to httpd_start(). TCP traffic is parsed as HTTP requests and, depending on the requested URI, user registered handlers are invoked which are supposed to send back HTTP response packets.
- *`httpd_stop()`*: This stops the server with the provided handle and frees up any associated memory/resources. This is a blocking function that first signals a halt to the server task and then waits for the task to terminate. While stopping, the task will close all open connections, remove registered URI handlers and reset all session context data to empty.
- *`httpd_register_uri_handler()`*: A URI handler is registered by passing object of type `httpd_uri_t` structure which has members including `uri` name, `method` type (eg. `HTTPD_GET/HTTPD_POST/HTTPD_PUT` etc.), function pointer of type `esp_err_t *handler (httpd_req_t *req)` and `user_ctx` pointer to user context data.

Application Example

```
/* Our URI handler function to be called during GET /uri request */
esp_err_t get_handler(httpd_req_t *req)
{
    /* Send a simple response */
    const char[] resp = "URI GET Response";
    httpd_resp_send(req, resp, strlen(resp));
    return ESP_OK;
}
```

(下页继续)

(续上页)

```
/* Our URI handler function to be called during POST /uri request */
esp_err_t post_handler(httpd_req_t *req)
{
    /* Destination buffer for content of HTTP POST request.
     * httpd_req_recv() accepts char* only, but content could
     * as well be any binary data (needs type casting).
     * In case of string data, null termination will be absent, and
     * content length would give length of string */
    char[100] content;

    /* Truncate if content length larger than the buffer */
    size_t recv_size = MIN(req->content_len, sizeof(content));

    int ret = httpd_req_recv(req, content, recv_size);
    if (ret <= 0) {  /* 0 return value indicates connection closed */
        /* Check if timeout occurred */
        if (ret == HTTPD_SOCK_ERR_TIMEOUT) {
            /* In case of timeout one can choose to retry calling
             * httpd_req_recv(), but to keep it simple, here we
             * respond with an HTTP 408 (Request Timeout) error */
            httpd_resp_send_408(req);
        }
        /* In case of error, returning ESP_FAIL will
         * ensure that the underlying socket is closed */
        return ESP_FAIL;
    }

    /* Send a simple response */
    const char[] resp = "URI POST Response";
    httpd_resp_send(req, resp, strlen(resp));
    return ESP_OK;
}

/* URI handler structure for GET /uri */
httpd_uri_t uri_get = {
    .uri      = "/uri",
    .method   = HTTP_GET,
    .handler  = get_handler,
    .user_ctx = NULL
};
```

(下页继续)

(续上页)

```
/* URI handler structure for POST /uri */
httpd_uri_t uri_post = {
    .uri      = "/uri",
    .method   = HTTP_POST,
    .handler  = post_handler,
    .user_ctx = NULL
};

/* Function for starting the webserver */
httpd_handle_t start_webserver(void)
{
    /* Generate default configuration */
    httpd_config_t config = HTTPD_DEFAULT_CONFIG();

    /* Empty handle to esp_http_server */
    httpd_handle_t server = NULL;

    /* Start the httpd server */
    if (httpd_start(&server, &config) == ESP_OK) {
        /* Register URI handlers */
        httpd_register_uri_handler(server, &uri_get);
        httpd_register_uri_handler(server, &uri_post);
    }
    /* If server failed to start, handle will be NULL */
    return server;
}

/* Function for stopping the webserver */
void stop_webserver(httpd_handle_t server)
{
    if (server) {
        /* Stop the httpd server */
        httpd_stop(server);
    }
}
```

Simple HTTP server example

Check HTTP server example under protocols/http_server/simple where handling of arbitrary content lengths, reading request headers and URL query parameters, and setting response headers is demonstrated.

Persistent Connections

HTTP server features persistent connections, allowing for the re-use of the same connection (session) for several transfers, all the while maintaining context specific data for the session. Context data may be allocated dynamically by the handler in which case a custom function may need to be specified for freeing this data when the connection/session is closed.

Persistent Connections Example

```
/* Custom function to free context */
void free_ctx_func(void *ctx)
{
    /* Could be something other than free */
    free(ctx);
}

esp_err_t adder_post_handler(httpd_req_t *req)
{
    /* Create session's context if not already available */
    if (! req->sess_ctx) {
        req->sess_ctx = malloc(sizeof(ANY_DATA_TYPE));  /*!< Pointer to context data */
        req->free_ctx = free_ctx_func;                  /*!< Function to free context␣
↪data */
    }

    /* Access context data */
    ANY_DATA_TYPE *ctx_data = (ANY_DATA_TYPE *)req->sess_ctx;

    /* Respond */
    ................
    ................
    ................

    return ESP_OK;
}
```

Check the example under protocols/http_server/persistent_sockets.

API Reference

Header File

- esp_http_server/include/esp_http_server.h

Functions

esp_err_t **httpd_register_uri_handler**(*httpd_handle_t handle*, **const** *httpd_uri_t *uri_handler*)

Registers a URI handler.

Example usage:

```
esp_err_t my_uri_handler(httpd_req_t* req)
{
    // Recv , Process and Send
    ....
    ....
    ....

    // Fail condition
    if (....) {
        // Return fail to close session //
        return ESP_FAIL;
    }

    // On success
    return ESP_OK;
}

// URI handler structure
httpd_uri_t my_uri {
    .uri      = "/my_uri/path/xyz",
    .method   = HTTPD_GET,
    .handler  = my_uri_handler,
    .user_ctx = NULL
};

// Register handler
```

(下页继续)

(续上页)

```
if (httpd_register_uri_handler(server_handle, &my_uri) != ESP_OK) {
   // If failed to register handler
   ....
}
```

Note URI handlers can be registered in real time as long as the server handle is valid.

Return

- ESP_OK : On successfully registering the handler
- ESP_ERR_INVALID_ARG : Null arguments
- ESP_ERR_HTTPD_HANDLERS_FULL : If no slots left for new handler
- ESP_ERR_HTTPD_HANDLER_EXISTS : If handler with same URI and method is already registered

Parameters

- `handle`: handle to HTTPD server instance
- `uri_handler`: pointer to handler that needs to be registered

esp_err_t **httpd_unregister_uri_handler**(*httpd_handle_t handle*, **const** char **uri*, *httpd_method_t method*)

Unregister a URI handler.

Return

- ESP_OK : On successfully deregistering the handler
- ESP_ERR_INVALID_ARG : Null arguments
- ESP_ERR_NOT_FOUND : Handler with specified URI and method not found

Parameters

- `handle`: handle to HTTPD server instance
- `uri`: URI string
- `method`: HTTP method

esp_err_t **httpd_unregister_uri**(*httpd_handle_t handle*, **const** char **uri*)

Unregister all URI handlers with the specified uri string.

Return

- ESP_OK : On successfully deregistering all such handlers
- ESP_ERR_INVALID_ARG : Null arguments

- ESP_ERR_NOT_FOUND : No handler registered with specified uri string

Parameters

- `handle`: handle to HTTPD server instance
- `uri`: uri string specifying all handlers that need to be deregisterd

esp_err_t **httpd_sess_set_recv_override**(*httpd_handle_t hd*, int *sockfd*, *httpd_recv_func_t recv_func*)

Override web server's receive function (by session FD)

This function overrides the web server's receive function. This same function is used to read HTTP request packets.

Note This API is supposed to be called either from the context of

- an http session APIs where sockfd is a valid parameter
- a URI handler where sockfd is obtained using httpd_req_to_sockfd()

Return

- ESP_OK : On successfully registering override
- ESP_ERR_INVALID_ARG : Null arguments

Parameters

- `hd`: HTTPD instance handle
- `sockfd`: Session socket FD
- `recv_func`: The receive function to be set for this session

esp_err_t **httpd_sess_set_send_override**(*httpd_handle_t hd*, int *sockfd*, *httpd_send_func_t send_func*)

Override web server's send function (by session FD)

This function overrides the web server's send function. This same function is used to send out any response to any HTTP request.

Note This API is supposed to be called either from the context of

- an http session APIs where sockfd is a valid parameter
- a URI handler where sockfd is obtained using httpd_req_to_sockfd()

Return

- ESP_OK : On successfully registering override
- ESP_ERR_INVALID_ARG : Null arguments

Parameters

- `hd`: HTTPD instance handle
- `sockfd`: Session socket FD
- `send_func`: The send function to be set for this session

esp_err_t **httpd_sess_set_pending_override**(*httpd_handle_t hd*, int *sockfd*, *httpd_pending_func_t pending_func*)

Override web server' s pending function (by session FD)

This function overrides the web server' s pending function. This function is used to test for pending bytes in a socket.

Note This API is supposed to be called either from the context of

- an http session APIs where sockfd is a valid parameter
- a URI handler where sockfd is obtained using httpd_req_to_sockfd()

Return

- ESP_OK : On successfully registering override
- ESP_ERR_INVALID_ARG : Null arguments

Parameters

- `hd`: HTTPD instance handle
- `sockfd`: Session socket FD
- `pending_func`: The receive function to be set for this session

int **httpd_req_to_sockfd**(*httpd_req_t* *r)

Get the Socket Descriptor from the HTTP request.

This API will return the socket descriptor of the session for which URI handler was executed on reception of HTTP request. This is useful when user wants to call functions that require session socket fd, from within a URI handler, ie. : httpd_sess_get_ctx(), httpd_sess_trigger_close(), httpd_sess_update_lru_counter().

Note This API is supposed to be called only from the context of a URI handler where httpd_req_t* request pointer is valid.

Return

- Socket descriptor : The socket descriptor for this request
- -1 : Invalid/NULL request pointer

Parameters

- `r`: The request whose socket descriptor should be found

int **httpd_req_recv**(*httpd_req_t* *r, char *buf, size_t buf_len)

API to read content data from the HTTP request.

This API will read HTTP content data from the HTTP request into provided buffer. Use content_len provided in httpd_req_t structure to know the length of data to be fetched. If content_len is too large for the buffer then user may have to make multiple calls to this function, each time fetching 'buf_len' number of bytes, while the pointer to content data is incremented internally by the same number.

Note

- This API is supposed to be called only from the context of a URI handler where httpd_req_t* request pointer is valid.
- If an error is returned, the URI handler must further return an error. This will ensure that the erroneous socket is closed and cleaned up by the web server.
- Presently Chunked Encoding is not supported

Return

- Bytes : Number of bytes read into the buffer successfully
- 0 : Buffer length parameter is zero / connection closed by peer
- HTTPD_SOCK_ERR_INVALID : Invalid arguments
- HTTPD_SOCK_ERR_TIMEOUT : Timeout/interrupted while calling socket recv()
- HTTPD_SOCK_ERR_FAIL : Unrecoverable error while calling socket recv()

Parameters

- `r`: The request being responded to
- `buf`: Pointer to a buffer that the data will be read into
- `buf_len`: Length of the buffer

size_t **httpd_req_get_hdr_value_len**(*httpd_req_t* *r, **const** char *field)

Search for a field in request headers and return the string length of it' s value.

Note

- This API is supposed to be called only from the context of a URI handler where httpd_req_t* request pointer is valid.
- Once httpd_resp_send() API is called all request headers are purged, so request headers need be copied into separate buffers if they are required later.

Return

- Length : If field is found in the request URL
- Zero : Field not found / Invalid request / Null arguments

Parameters

- `r`: The request being responded to
- `field`: The header field to be searched in the request

esp_err_t **httpd_req_get_hdr_value_str**(*httpd_req_t* *r, **const** char *field, char *val, size_t val_size)

Get the value string of a field from the request headers.

Note

- This API is supposed to be called only from the context of a URI handler where httpd_req_t* request pointer is valid.
- Once httpd_resp_send() API is called all request headers are purged, so request headers need be copied into separate buffers if they are required later.
- If output size is greater than input, then the value is truncated, accompanied by truncation error as return value.
- Use httpd_req_get_hdr_value_len() to know the right buffer length

Return

- ESP_OK : Field found in the request header and value string copied
- ESP_ERR_NOT_FOUND : Key not found
- ESP_ERR_INVALID_ARG : Null arguments
- ESP_ERR_HTTPD_INVALID_REQ : Invalid HTTP request pointer
- ESP_ERR_HTTPD_RESULT_TRUNC : Value string truncated

Parameters

- `r`: The request being responded to
- `field`: The field to be searched in the header
- `val`: Pointer to the buffer into which the value will be copied if the field is found
- `val_size`: Size of the user buffer "val"

size_t **httpd_req_get_url_query_len**(*httpd_req_t* *r)

Get Query string length from the request URL.

Note This API is supposed to be called only from the context of a URI handler where httpd_req_t* request pointer is valid

Return

- Length : Query is found in the request URL

- Zero : Query not found / Null arguments / Invalid request

Parameters

- `r`: The request being responded to

esp_err_t **httpd_req_get_url_query_str**(*httpd_req_t* *r, char *buf, size_t buf_len)

Get Query string from the request URL.

Note

- Presently, the user can fetch the full URL query string, but decoding will have to be performed by the user. Request headers can be read using httpd_req_get_hdr_value_str() to know the 'Content-Type' (eg. Content-Type: application/x-www-form-urlencoded) and then the appropriate decoding algorithm needs to be applied.
- This API is supposed to be called only from the context of a URI handler where httpd_req_t* request pointer is valid
- If output size is greater than input, then the value is truncated, accompanied by truncation error as return value
- Prior to calling this function, one can use httpd_req_get_url_query_len() to know the query string length beforehand and hence allocate the buffer of right size (usually query string length + 1 for null termination) for storing the query string

Return

- ESP_OK : Query is found in the request URL and copied to buffer
- ESP_ERR_NOT_FOUND : Query not found
- ESP_ERR_INVALID_ARG : Null arguments
- ESP_ERR_HTTPD_INVALID_REQ : Invalid HTTP request pointer
- ESP_ERR_HTTPD_RESULT_TRUNC : Query string truncated

Parameters

- `r`: The request being responded to
- `buf`: Pointer to the buffer into which the query string will be copied (if found)
- `buf_len`: Length of output buffer

esp_err_t **httpd_query_key_value**(**const** char *qry, **const** char *key, char *val, size_t val_size)

Helper function to get a URL query tag from a query string of the type param1=val1&param2=val2.

Note

- The components of URL query string (keys and values) are not URLdecoded. The user must check for 'Content-Type' field in the request headers and then depending upon the specified encoding (URLencoded or otherwise) apply the appropriate decoding algorithm.
- If actual value size is greater than val_size, then the value is truncated, accompanied by truncation error as return value.

Return

- ESP_OK : Key is found in the URL query string and copied to buffer
- ESP_ERR_NOT_FOUND : Key not found
- ESP_ERR_INVALID_ARG : Null arguments
- ESP_ERR_HTTPD_RESULT_TRUNC : Value string truncated

Parameters

- `qry`: Pointer to query string
- `key`: The key to be searched in the query string
- `val`: Pointer to the buffer into which the value will be copied if the key is found
- `val_size`: Size of the user buffer "val"

bool **httpd_uri_match_wildcard**(**const** char *_uri_template_, **const** char *_uri_to_match_, size_t _match_upto_)

Test if a URI matches the given wildcard template.

Template may end with "?" to make the previous character optional (typically a slash), "*" for a wildcard match, and "?*" to make the previous character optional, and if present, allow anything to follow.

Example:

- * matches everything
- /foo/? matches /foo and /foo/
- /foo/* (sans the backslash) matches /foo/ and /foo/bar, but not /foo or /fo
- /foo/?* or /foo/*? (sans the backslash) matches /foo/, /foo/bar, and also /foo, but not /foox or /fo

The special characters "?" and "*" anywhere else in the template will be taken literally.

Return true if a match was found

Parameters

- `uri_template`: URI template (pattern)
- `uri_to_match`: URI to be matched

- `match_upto`: how many characters of the URI buffer to test (there may be trailing query string etc.)

esp_err_t **httpd_resp_send**(*httpd_req_t* *r, **const** char *buf, ssize_t buf_len)

API to send a complete HTTP response.

This API will send the data as an HTTP response to the request. This assumes that you have the entire response ready in a single buffer. If you wish to send response in incremental chunks use httpd_resp_send_chunk() instead.

If no status code and content-type were set, by default this will send 200 OK status code and content type as text/html. You may call the following functions before this API to configure the response headers : httpd_resp_set_status() - for setting the HTTP status string, httpd_resp_set_type() - for setting the Content Type, httpd_resp_set_hdr() - for appending any additional field value entries in the response header

Note

- This API is supposed to be called only from the context of a URI handler where httpd_req_t* request pointer is valid.
- Once this API is called, the request has been responded to.
- No additional data can then be sent for the request.
- Once this API is called, all request headers are purged, so request headers need be copied into separate buffers if they are required later.

Return

- ESP_OK : On successfully sending the response packet
- ESP_ERR_INVALID_ARG : Null request pointer
- ESP_ERR_HTTPD_RESP_HDR : Essential headers are too large for internal buffer
- ESP_ERR_HTTPD_RESP_SEND : Error in raw send
- ESP_ERR_HTTPD_INVALID_REQ : Invalid request

Parameters

- `r`: The request being responded to
- `buf`: Buffer from where the content is to be fetched
- `buf_len`: Length of the buffer, HTTPD_RESP_USE_STRLEN to use strlen()

esp_err_t **httpd_resp_send_chunk**(*httpd_req_t* *r, **const** char *buf, ssize_t buf_len)

API to send one HTTP chunk.

This API will send the data as an HTTP response to the request. This API will use chunked-encoding and send the response in the form of chunks. If you have the entire response contained in a single buffer, please use httpd_resp_send() instead.

If no status code and content-type were set, by default this will send 200 OK status code and content type as text/html. You may call the following functions before this API to configure the response headers httpd_resp_set_status() - for setting the HTTP status string, httpd_resp_set_type() - for setting the Content Type, httpd_resp_set_hdr() - for appending any additional field value entries in the response header

Note

- This API is supposed to be called only from the context of a URI handler where httpd_req_t* request pointer is valid.
- When you are finished sending all your chunks, you must call this function with buf_len as 0.
- Once this API is called, all request headers are purged, so request headers need be copied into separate buffers if they are required later.

Return

- ESP_OK : On successfully sending the response packet chunk
- ESP_ERR_INVALID_ARG : Null request pointer
- ESP_ERR_HTTPD_RESP_HDR : Essential headers are too large for internal buffer
- ESP_ERR_HTTPD_RESP_SEND : Error in raw send
- ESP_ERR_HTTPD_INVALID_REQ : Invalid request pointer

Parameters

- `r`: The request being responded to
- `buf`: Pointer to a buffer that stores the data
- `buf_len`: Length of the buffer, HTTPD_RESP_USE_STRLEN to use strlen()

`static` *esp_err_t* `httpd_resp_sendstr(`*httpd_req_t* *r, `const` char *str`)`

API to send a complete string as HTTP response.

This API simply calls http_resp_send with buffer length set to string length assuming the buffer contains a null terminated string

Return

- ESP_OK : On successfully sending the response packet
- ESP_ERR_INVALID_ARG : Null request pointer

- ESP_ERR_HTTPD_RESP_HDR : Essential headers are too large for internal buffer
- ESP_ERR_HTTPD_RESP_SEND : Error in raw send
- ESP_ERR_HTTPD_INVALID_REQ : Invalid request

Parameters

- `r`: The request being responded to
- `str`: String to be sent as response body

`static` *esp_err_t* `httpd_resp_sendstr_chunk`(*httpd_req_t* *r, `const` char *str)

API to send a string as an HTTP response chunk.

This API simply calls http_resp_send_chunk with buffer length set to string length assuming the buffer contains a null terminated string

Return

- ESP_OK : On successfully sending the response packet
- ESP_ERR_INVALID_ARG : Null request pointer
- ESP_ERR_HTTPD_RESP_HDR : Essential headers are too large for internal buffer
- ESP_ERR_HTTPD_RESP_SEND : Error in raw send
- ESP_ERR_HTTPD_INVALID_REQ : Invalid request

Parameters

- `r`: The request being responded to
- `str`: String to be sent as response body (NULL to finish response packet)

esp_err_t `httpd_resp_set_status`(*httpd_req_t* *r, `const` char *status)

API to set the HTTP status code.

This API sets the status of the HTTP response to the value specified. By default, the '200 OK' response is sent as the response.

Note

- This API is supposed to be called only from the context of a URI handler where httpd_req_t* request pointer is valid.
- This API only sets the status to this value. The status isn' t sent out until any of the send APIs is executed.
- Make sure that the lifetime of the status string is valid till send function is called.

Return

- ESP_OK : On success

- ESP_ERR_INVALID_ARG : Null arguments
- ESP_ERR_HTTPD_INVALID_REQ : Invalid request pointer

Parameters

- `r`: The request being responded to
- `status`: The HTTP status code of this response

esp_err_t **httpd_resp_set_type**(*httpd_req_t* *r, **const** char *type)

API to set the HTTP content type.

This API sets the 'Content Type' field of the response. The default content type is 'text/html'.

Note

- This API is supposed to be called only from the context of a URI handler where httpd_req_t* request pointer is valid.
- This API only sets the content type to this value. The type isn't sent out until any of the send APIs is executed.
- Make sure that the lifetime of the type string is valid till send function is called.

Return

- ESP_OK : On success
- ESP_ERR_INVALID_ARG : Null arguments
- ESP_ERR_HTTPD_INVALID_REQ : Invalid request pointer

Parameters

- `r`: The request being responded to
- `type`: The Content Type of the response

esp_err_t **httpd_resp_set_hdr**(*httpd_req_t* *r, **const** char *field, **const** char *value)

API to append any additional headers.

This API sets any additional header fields that need to be sent in the response.

Note

- This API is supposed to be called only from the context of a URI handler where httpd_req_t* request pointer is valid.
- The header isn't sent out until any of the send APIs is executed.
- The maximum allowed number of additional headers is limited to value of max_resp_headers in config structure.
- Make sure that the lifetime of the field value strings are valid till send function is called.

Return

- ESP_OK : On successfully appending new header
- ESP_ERR_INVALID_ARG : Null arguments
- ESP_ERR_HTTPD_RESP_HDR : Total additional headers exceed max allowed
- ESP_ERR_HTTPD_INVALID_REQ : Invalid request pointer

Parameters

- `r`: The request being responded to
- `field`: The field name of the HTTP header
- `value`: The value of this HTTP header

esp_err_t **httpd_resp_send_err**(*httpd_req_t* **req*, *httpd_err_code_t error*, **const** char **msg*)

For sending out error code in response to HTTP request.

Note

- This API is supposed to be called only from the context of a URI handler where httpd_req_t* request pointer is valid.
- Once this API is called, all request headers are purged, so request headers need be copied into separate buffers if they are required later.
- If you wish to send additional data in the body of the response, please use the lower-level functions directly.

Return

- ESP_OK : On successfully sending the response packet
- ESP_ERR_INVALID_ARG : Null arguments
- ESP_ERR_HTTPD_RESP_SEND : Error in raw send
- ESP_ERR_HTTPD_INVALID_REQ : Invalid request pointer

Parameters

- `req`: Pointer to the HTTP request for which the response needs to be sent
- `error`: Error type to send
- `msg`: Error message string (pass NULL for default message)

static *esp_err_t* **httpd_resp_send_404**(*httpd_req_t* **r*)

Helper function for HTTP 404.

Send HTTP 404 message. If you wish to send additional data in the body of the response, please use the lower-level functions directly.

Note

- This API is supposed to be called only from the context of a URI handler where httpd_req_t* request pointer is valid.
- Once this API is called, all request headers are purged, so request headers need be copied into separate buffers if they are required later.

Return

- ESP_OK : On successfully sending the response packet
- ESP_ERR_INVALID_ARG : Null arguments
- ESP_ERR_HTTPD_RESP_SEND : Error in raw send
- ESP_ERR_HTTPD_INVALID_REQ : Invalid request pointer

Parameters

- `r`: The request being responded to

`static` *esp_err_t* **httpd_resp_send_408**(*httpd_req_t* *r)

Helper function for HTTP 408.

Send HTTP 408 message. If you wish to send additional data in the body of the response, please use the lower-level functions directly.

Note

- This API is supposed to be called only from the context of a URI handler where httpd_req_t* request pointer is valid.
- Once this API is called, all request headers are purged, so request headers need be copied into separate buffers if they are required later.

Return

- ESP_OK : On successfully sending the response packet
- ESP_ERR_INVALID_ARG : Null arguments
- ESP_ERR_HTTPD_RESP_SEND : Error in raw send
- ESP_ERR_HTTPD_INVALID_REQ : Invalid request pointer

Parameters

- `r`: The request being responded to

`static` *esp_err_t* **httpd_resp_send_500**(*httpd_req_t* *r)

Helper function for HTTP 500.

Send HTTP 500 message. If you wish to send additional data in the body of the response, please use the lower-level functions directly.

Note

- This API is supposed to be called only from the context of a URI handler where httpd_req_t* request pointer is valid.
- Once this API is called, all request headers are purged, so request headers need be copied into separate buffers if they are required later.

Return

- ESP_OK : On successfully sending the response packet
- ESP_ERR_INVALID_ARG : Null arguments
- ESP_ERR_HTTPD_RESP_SEND : Error in raw send
- ESP_ERR_HTTPD_INVALID_REQ : Invalid request pointer

Parameters

- `r`: The request being responded to

int **httpd_send**(*httpd_req_t* *r, **const** char *buf, size_t buf_len)

Raw HTTP send.

Call this API if you wish to construct your custom response packet. When using this, all essential header, eg. HTTP version, Status Code, Content Type and Length, Encoding, etc. will have to be constructed manually, and HTTP delimeters (CRLF) will need to be placed correctly for separating sub-sections of the HTTP response packet.

If the send override function is set, this API will end up calling that function eventually to send data out.

Note

- This API is supposed to be called only from the context of a URI handler where httpd_req_t* request pointer is valid.
- Unless the response has the correct HTTP structure (which the user must now ensure) it is not guaranteed that it will be recognized by the client. For most cases, you wouldn' t have to call this API, but you would rather use either of : httpd_resp_send(), httpd_resp_send_chunk()

Return

- Bytes : Number of bytes that were sent successfully
- HTTPD_SOCK_ERR_INVALID : Invalid arguments
- HTTPD_SOCK_ERR_TIMEOUT : Timeout/interrupted while calling socket send()
- HTTPD_SOCK_ERR_FAIL : Unrecoverable error while calling socket send()

Parameters

- `r`: The request being responded to
- `buf`: Buffer from where the fully constructed packet is to be read
- `buf_len`: Length of the buffer

esp_err_t **httpd_register_err_handler**(*httpd_handle_t handle*, *httpd_err_code_t error*, *httpd_err_handler_func_t handler_fn*)

Function for registering HTTP error handlers.

This function maps a handler function to any supported error code given by `httpd_err_code_t`. See prototype `httpd_err_handler_func_t` above for details.

Return

- ESP_OK : handler registered successfully
- ESP_ERR_INVALID_ARG : invalid error code or server handle

Parameters

- `handle`: HTTP server handle
- `error`: Error type
- `handler_fn`: User implemented handler function (Pass NULL to unset any previously set handler)

esp_err_t **httpd_start**(*httpd_handle_t* **handle*, **const** *httpd_config_t* **config*)

Starts the web server.

Create an instance of HTTP server and allocate memory/resources for it depending upon the specified configuration.

Example usage:

```
//Function for starting the webserver
httpd_handle_t start_webserver(void)
{
    // Generate default configuration
    httpd_config_t config = HTTPD_DEFAULT_CONFIG();

    // Empty handle to http_server
    httpd_handle_t server = NULL;

    // Start the httpd server
    if (httpd_start(&server, &config) == ESP_OK) {
        // Register URI handlers
        httpd_register_uri_handler(server, &uri_get);
```

(下页继续)

(续上页)

```
        httpd_register_uri_handler(server, &uri_post);
    }
    // If server failed to start, handle will be NULL
    return server;
}
```

Return

- ESP_OK : Instance created successfully
- ESP_ERR_INVALID_ARG : Null argument(s)
- ESP_ERR_HTTPD_ALLOC_MEM : Failed to allocate memory for instance
- ESP_ERR_HTTPD_TASK : Failed to launch server task

Parameters

- `config`: Configuration for new instance of the server
- `handle`: Handle to newly created instance of the server. NULL on error

esp_err_t **httpd_stop**(*httpd_handle_t handle*)

Stops the web server.

Deallocates memory/resources used by an HTTP server instance and deletes it. Once deleted the handle can no longer be used for accessing the instance.

Example usage:

```
// Function for stopping the webserver
void stop_webserver(httpd_handle_t server)
{
    // Ensure handle is non NULL
    if (server != NULL) {
        // Stop the httpd server
        httpd_stop(server);
    }
}
```

Return

- ESP_OK : Server stopped successfully
- ESP_ERR_INVALID_ARG : Handle argument is Null

Parameters

- `handle`: Handle to server returned by httpd_start

esp_err_t **httpd_queue_work**(*httpd_handle_t handle*, *httpd_work_fn_t work*, void **arg*)

Queue execution of a function in HTTPD' s context.

This API queues a work function for asynchronous execution

Note Some protocols require that the web server generate some asynchronous data and send it to the persistently opened connection. This facility is for use by such protocols.

Return

- ESP_OK : On successfully queueing the work
- ESP_FAIL : Failure in ctrl socket
- ESP_ERR_INVALID_ARG : Null arguments

Parameters

- `handle`: Handle to server returned by httpd_start
- `work`: Pointer to the function to be executed in the HTTPD' s context
- `arg`: Pointer to the arguments that should be passed to this function

void ****httpd_sess_get_ctx**(*httpd_handle_t handle*, int *sockfd*)

Get session context from socket descriptor.

Typically if a session context is created, it is available to URI handlers through the httpd_req_t structure. But, there are cases where the web server' s send/receive functions may require the context (for example, for accessing keying information etc). Since the send/receive function only have the socket descriptor at their disposal, this API provides them with a way to retrieve the session context.

Return

- void* : Pointer to the context associated with this session
- NULL : Empty context / Invalid handle / Invalid socket fd

Parameters

- `handle`: Handle to server returned by httpd_start
- `sockfd`: The socket descriptor for which the context should be extracted.

void **httpd_sess_set_ctx**(*httpd_handle_t handle*, int *sockfd*, void **ctx*, *httpd_free_ctx_fn_t free_fn*)

Set session context by socket descriptor.

Parameters

- `handle`: Handle to server returned by httpd_start

- `sockfd`: The socket descriptor for which the context should be extracted.
- `ctx`: Context object to assign to the session
- `free_fn`: Function that should be called to free the context

void *`httpd_sess_get_transport_ctx`(*httpd_handle_t* *handle*, int *sockfd*)

Get session 'transport' context by socket descriptor.

This context is used by the send/receive functions, for example to manage SSL context.

See httpd_sess_get_ctx()

Return

- void* : Pointer to the transport context associated with this session
- NULL : Empty context / Invalid handle / Invalid socket fd

Parameters

- `handle`: Handle to server returned by httpd_start
- `sockfd`: The socket descriptor for which the context should be extracted.

void `httpd_sess_set_transport_ctx`(*httpd_handle_t* *handle*, int *sockfd*, void **ctx*, *httpd_free_ctx_fn_t* *free_fn*)

Set session 'transport' context by socket descriptor.

See httpd_sess_set_ctx()

Parameters

- `handle`: Handle to server returned by httpd_start
- `sockfd`: The socket descriptor for which the context should be extracted.
- `ctx`: Transport context object to assign to the session
- `free_fn`: Function that should be called to free the transport context

void *`httpd_get_global_user_ctx`(*httpd_handle_t* *handle*)

Get HTTPD global user context (it was set in the server config struct)

Return global user context

Parameters

- `handle`: Handle to server returned by httpd_start

void *`httpd_get_global_transport_ctx`(*httpd_handle_t* *handle*)

Get HTTPD global transport context (it was set in the server config struct)

Return global transport context

Parameters

- `handle`: Handle to server returned by httpd_start

esp_err_t **httpd_sess_trigger_close**(*httpd_handle_t handle*, int *sockfd*)

Trigger an httpd session close externally.

Note Calling this API is only required in special circumstances wherein some application requires to close an httpd client session asynchronously.

Return

- ESP_OK : On successfully initiating closure
- ESP_FAIL : Failure to queue work
- ESP_ERR_NOT_FOUND : Socket fd not found
- ESP_ERR_INVALID_ARG : Null arguments

Parameters

- `handle`: Handle to server returned by httpd_start
- `sockfd`: The socket descriptor of the session to be closed

esp_err_t **httpd_sess_update_lru_counter**(*httpd_handle_t handle*, int *sockfd*)

Update LRU counter for a given socket.

LRU Counters are internally associated with each session to monitor how recently a session exchanged traffic. When LRU purge is enabled, if a client is requesting for connection but maximum number of sockets/sessions is reached, then the session having the earliest LRU counter is closed automatically.

Updating the LRU counter manually prevents the socket from being purged due to the Least Recently Used (LRU) logic, even though it might not have received traffic for some time. This is useful when all open sockets/session are frequently exchanging traffic but the user specifically wants one of the sessions to be kept open, irrespective of when it last exchanged a packet.

Note Calling this API is only necessary if the LRU Purge Enable option is enabled.

Return

- ESP_OK : Socket found and LRU counter updated
- ESP_ERR_NOT_FOUND : Socket not found
- ESP_ERR_INVALID_ARG : Null arguments

Parameters

- `handle`: Handle to server returned by httpd_start
- `sockfd`: The socket descriptor of the session for which LRU counter is to be updated

Structures

struct httpd_config

HTTP Server Configuration Structure.

Note Use HTTPD_DEFAULT_CONFIG() to initialize the configuration to a default value and then modify only those fields that are specifically determined by the use case.

Public Members

unsigned **task_priority**

Priority of FreeRTOS task which runs the server

size_t **stack_size**

The maximum stack size allowed for the server task

uint16_t **server_port**

TCP Port number for receiving and transmitting HTTP traffic

uint16_t **ctrl_port**

UDP Port number for asynchronously exchanging control signals between various components of the server

uint16_t **max_open_sockets**

Max number of sockets/clients connected at any time

uint16_t **max_uri_handlers**

Maximum allowed uri handlers

uint16_t **max_resp_headers**

Maximum allowed additional headers in HTTP response

uint16_t **backlog_conn**

Number of backlog connections

bool **lru_purge_enable**

Purge "Least Recently Used" connection

uint16_t **recv_wait_timeout**

Timeout for recv function (in seconds)

uint16_t **send_wait_timeout**

Timeout for send function (in seconds)

void ***global_user_ctx**

Global user context.

This field can be used to store arbitrary user data within the server context. The value can be retrieved using the server handle, available e.g. in the httpd_req_t struct.

When shutting down, the server frees up the user context by calling free() on the global_user_ctx field. If you wish to use a custom function for freeing the global user context, please specify that here.

httpd_free_ctx_fn_t **global_user_ctx_free_fn**

Free function for global user context

void ***global_transport_ctx**

Global transport context.

Similar to global_user_ctx, but used for session encoding or encryption (e.g. to hold the SSL context). It will be freed using free(), unless global_transport_ctx_free_fn is specified.

httpd_free_ctx_fn_t **global_transport_ctx_free_fn**

Free function for global transport context

httpd_open_func_t **open_fn**

Custom session opening callback.

Called on a new session socket just after accept(), but before reading any data.

This is an opportunity to set up e.g. SSL encryption using global_transport_ctx and the send/recv/pending session overrides.

If a context needs to be maintained between these functions, store it in the session using httpd_sess_set_transport_ctx() and retrieve it later with httpd_sess_get_transport_ctx()

Returning a value other than ESP_OK will immediately close the new socket.

httpd_close_func_t **close_fn**

Custom session closing callback.

Called when a session is deleted, before freeing user and transport contexts and before closing the socket. This is a place for custom de-init code common to all sockets.

Set the user or transport context to NULL if it was freed here, so the server does not try to free it again.

This function is run for all terminated sessions, including sessions where the socket was closed by the network stack - that is, the file descriptor may not be valid anymore.

httpd_uri_match_func_t **uri_match_fn**

URI matcher function.

Called when searching for a matching URI: 1) whose request handler is to be executed right after an HTTP request is successfully parsed 2) in order to prevent duplication while registering a new URI handler using `httpd_register_uri_handler()`

Available options are: 1) NULL : Internally do basic matching using `strncmp()` 2) `httpd_uri_match_wildcard()` : URI wildcard matcher

Users can implement their own matching functions (See description of the `httpd_uri_match_func_t` function prototype)

struct httpd_req

HTTP Request Data Structure.

Public Members

httpd_handle_t **handle**

Handle to server instance

int **method**

The type of HTTP request, -1 if unsupported method

const char **uri**[**HTTPD_MAX_URI_LEN** + 1]

The URI of this request (1 byte extra for null termination)

size_t **content_len**

Length of the request body

void ***aux**

Internally used members

void ***user_ctx**

User context pointer passed during URI registration.

void ***sess_ctx**

Session Context Pointer

A session context. Contexts are maintained across 'sessions' for a given open TCP connection. One session could have multiple request responses. The web server will ensure that the context persists across all these request and responses.

By default, this is NULL. URI Handlers can set this to any meaningful value.

If the underlying socket gets closed, and this pointer is non-NULL, the web server will free up the context by calling free(), unless free_ctx function is set.

httpd_free_ctx_fn_t **free_ctx**

Pointer to free context hook

Function to free session context

If the web server's socket closes, it frees up the session context by calling free() on the sess_ctx member. If you wish to use a custom function for freeing the session context, please specify that here.

bool **ignore_sess_ctx_changes**

Flag indicating if Session Context changes should be ignored

By default, if you change the sess_ctx in some URI handler, the http server will internally free the earlier context (if non NULL), after the URI handler returns. If you want to manage the allocation/reallocation/freeing of sess_ctx yourself, set this flag to true, so that the server will not perform any checks on it. The context will be cleared by the server (by calling free_ctx or free()) only if the socket gets closed.

struct httpd_uri

Structure for URI handler.

Public Members

const char ***uri**

The URI to handle

httpd_method_t **method**

Method supported by the URI

esp_err_t (***handler**)(*httpd_req_t* *r)

Handler to call for supported request method. This must return ESP_OK, or else the underlying socket will be closed.

void ***user_ctx**

Pointer to user context data which will be available to handler

Macros

HTTPD_MAX_REQ_HDR_LEN

HTTPD_MAX_URI_LEN

HTTPD_SOCK_ERR_FAIL

HTTPD_SOCK_ERR_INVALID

HTTPD_SOCK_ERR_TIMEOUT

HTTPD_200

HTTP Response 200

HTTPD_204

HTTP Response 204

HTTPD_207

HTTP Response 207

HTTPD_400

HTTP Response 400

HTTPD_404
: HTTP Response 404

HTTPD_408
: HTTP Response 408

HTTPD_500
: HTTP Response 500

HTTPD_TYPE_JSON
: HTTP Content type JSON

HTTPD_TYPE_TEXT
: HTTP Content type text/HTML

HTTPD_TYPE_OCTET
: HTTP Content type octext-stream

HTTPD_DEFAULT_CONFIG()

ESP_ERR_HTTPD_BASE
: Starting number of HTTPD error codes

ESP_ERR_HTTPD_HANDLERS_FULL
: All slots for registering URI handlers have been consumed

ESP_ERR_HTTPD_HANDLER_EXISTS
: URI handler with same method and target URI already registered

ESP_ERR_HTTPD_INVALID_REQ
: Invalid request pointer

ESP_ERR_HTTPD_RESULT_TRUNC
: Result string truncated

ESP_ERR_HTTPD_RESP_HDR
: Response header field larger than supported

ESP_ERR_HTTPD_RESP_SEND
: Error occured while sending response packet

ESP_ERR_HTTPD_ALLOC_MEM
: Failed to dynamically allocate memory for resource

ESP_ERR_HTTPD_TASK
: Failed to launch server task/thread

HTTPD_RESP_USE_STRLEN

Type Definitions

typedef struct *httpd_req* **httpd_req_t**

HTTP Request Data Structure.

typedef struct *httpd_uri* **httpd_uri_t**

Structure for URI handler.

typedef int (***httpd_send_func_t**)(*httpd_handle_t* hd, int sockfd, **const** char *buf, size_t buf_len, int flags)

Prototype for HTTPDs low-level send function.

Note User specified send function must handle errors internally, depending upon the set value of errno, and return specific HTTPD_SOCK_ERR_ codes, which will eventually be conveyed as return value of httpd_send() function

Return

- Bytes : The number of bytes sent successfully
- HTTPD_SOCK_ERR_INVALID : Invalid arguments
- HTTPD_SOCK_ERR_TIMEOUT : Timeout/interrupted while calling socket send()
- HTTPD_SOCK_ERR_FAIL : Unrecoverable error while calling socket send()

Parameters

- `hd`: server instance
- `sockfd`: session socket file descriptor
- `buf`: buffer with bytes to send
- `buf_len`: data size
- `flags`: flags for the send() function

typedef int (***httpd_recv_func_t**)(*httpd_handle_t* hd, int sockfd, char *buf, size_t buf_len, int flags)

Prototype for HTTPDs low-level recv function.

Note User specified recv function must handle errors internally, depending upon the set value of errno, and return specific HTTPD_SOCK_ERR_ codes, which will eventually be conveyed as return value of httpd_req_recv() function

Return

- Bytes : The number of bytes received successfully
- 0 : Buffer length parameter is zero / connection closed by peer
- HTTPD_SOCK_ERR_INVALID : Invalid arguments

- HTTPD_SOCK_ERR_TIMEOUT : Timeout/interrupted while calling socket recv()
- HTTPD_SOCK_ERR_FAIL : Unrecoverable error while calling socket recv()

Parameters

- `hd`: server instance
- `sockfd`: session socket file descriptor
- `buf`: buffer with bytes to send
- `buf_len`: data size
- `flags`: flags for the send() function

`typedef` int (*`httpd_pending_func_t`)(*httpd_handle_t* hd, int sockfd)

Prototype for HTTPDs low-level "get pending bytes" function.

Note User specified pending function must handle errors internally, depending upon the set value of errno, and return specific HTTPD_SOCK_ERR_ codes, which will be handled accordingly in the server task.

Return

- Bytes : The number of bytes waiting to be received
- HTTPD_SOCK_ERR_INVALID : Invalid arguments
- HTTPD_SOCK_ERR_TIMEOUT : Timeout/interrupted while calling socket pending()
- HTTPD_SOCK_ERR_FAIL : Unrecoverable error while calling socket pending()

Parameters

- `hd`: server instance
- `sockfd`: session socket file descriptor

`typedef` *esp_err_t* (*`httpd_err_handler_func_t`)(*httpd_req_t* *req, *httpd_err_code_t* error)

Function prototype for HTTP error handling.

This function is executed upon HTTP errors generated during internal processing of an HTTP request. This is used to override the default behavior on error, which is to send HTTP error response and close the underlying socket.

Note

- If implemented, the server will not automatically send out HTTP error response codes, therefore, httpd_resp_send_err() must be invoked inside this function if user wishes to generate HTTP error responses.

- When invoked, the validity of `uri`, `method`, `content_len` and `user_ctx` fields of the httpd_req_t parameter is not guaranteed as the HTTP request may be partially received/parsed.
- The function must return ESP_OK if underlying socket needs to be kept open. Any other value will ensure that the socket is closed. The return value is ignored when error is of type `HTTPD_500_INTERNAL_SERVER_ERROR` and the socket closed anyway.

Return

- ESP_OK : error handled successful
- ESP_FAIL : failure indicates that the underlying socket needs to be closed

Parameters

- `req`: HTTP request for which the error needs to be handled
- `error`: Error type

`typedef` void *`httpd_handle_t`

HTTP Server Instance Handle.

Every instance of the server will have a unique handle.

`typedef enum` http_method `httpd_method_t`

HTTP Method Type wrapper over "enum http_method" available in "http_parser" library.

`typedef` void (*`httpd_free_ctx_fn_t`)(void *ctx)

Prototype for freeing context data (if any)

Parameters

- `ctx`: object to free

`typedef` *esp_err_t* (*`httpd_open_func_t`)(*httpd_handle_t* hd, int sockfd)

Function prototype for opening a session.

Called immediately after the socket was opened to set up the send/recv functions and other parameters of the socket.

Return

- ESP_OK : On success
- Any value other than ESP_OK will signal the server to close the socket immediately

Parameters

- `hd`: server instance
- `sockfd`: session socket file descriptor

typedef void (***httpd_close_func_t**)(*httpd_handle_t* hd, int sockfd)

Function prototype for closing a session.

Note It' s possible that the socket descriptor is invalid at this point, the function is called for all terminated sessions. Ensure proper handling of return codes.

Parameters

- `hd`: server instance
- `sockfd`: session socket file descriptor

typedef bool (***httpd_uri_match_func_t**)(**const** char *reference_uri, **const** char *uri_to_match, size_t match_upto)

Function prototype for URI matching.

Return true on match

Parameters

- `reference_uri`: URI/template with respect to which the other URI is matched
- `uri_to_match`: URI/template being matched to the reference URI/template
- `match_upto`: For specifying the actual length of `uri_to_match` up to which the matching algorithm is to be applied (The maximum value is `strlen(uri_to_match)`, independent of the length of `reference_uri`)

typedef struct *httpd_config* **httpd_config_t**

HTTP Server Configuration Structure.

Note Use HTTPD_DEFAULT_CONFIG() to initialize the configuration to a default value and then modify only those fields that are specifically determined by the use case.

typedef void (***httpd_work_fn_t**)(void *arg)

Prototype of the HTTPD work function Please refer to httpd_queue_work() for more details.

Parameters

- `arg`: The arguments for this work function

Enumerations

enum httpd_err_code_t

Error codes sent as HTTP response in case of errors encountered during processing of an HTTP request.

Values:

`HTTPD_500_INTERNAL_SERVER_ERROR` = 0

HTTPD_501_METHOD_NOT_IMPLEMENTED

HTTPD_505_VERSION_NOT_SUPPORTED

HTTPD_400_BAD_REQUEST

HTTPD_404_NOT_FOUND

HTTPD_405_METHOD_NOT_ALLOWED

HTTPD_408_REQ_TIMEOUT

HTTPD_411_LENGTH_REQUIRED

HTTPD_414_URI_TOO_LONG

HTTPD_431_REQ_HDR_FIELDS_TOO_LARGE

HTTPD_ERR_CODE_MAX

3.4.5 HTTPS server

Overview

This component is built on top of *esp_http_server*. The HTTPS server takes advantage of hooks and function overrides in the regular HTTP server to provide encryption using OpenSSL.

All documentation for *esp_http_server* applies also to a server you create this way.

Used APIs

The following API of *esp_http_server* should not be used with *esp_https_server*, as they are used internally to handle secure sessions and to maintain internal state:

- "send", "receive" and "pending" function overrides - secure socket handling
  - *httpd_sess_set_send_override()*
  - *httpd_sess_set_recv_override()*
  - *httpd_sess_set_pending_override()*
- "transport context" - both global and session
  - *httpd_sess_get_transport_ctx()* - returns SSL used for the session
  - *httpd_sess_set_transport_ctx()*
  - *httpd_get_global_transport_ctx()* - returns the shared SSL context
  - httpd_config_t.global_transport_ctx
  - httpd_config_t.global_transport_ctx_free_fn

- `httpd_config_t.open_fn` - used to set up secure sockets

Everything else can be used without limitations.

Usage

Please see the example protocols/https_server to learn how to set up a secure server.

Basically all you need is to generate a certificate, embed it in the firmware, and provide its pointers and lengths to the start function via the init struct.

The server can be started with or without SSL by changing a flag in the init struct - `httpd_ssl_config.transport_mode`. This could be used e.g. for testing or in trusted environments where you prefer speed over security.

Performance

The initial session setup can take about two seconds, or more with slower clock speeds or more verbose logging. Subsequent requests through the open secure socket are much faster (down to under 100 ms).

API Reference

Header File

- esp_https_server/include/esp_https_server.h

Functions

esp_err_t **httpd_ssl_start**(*httpd_handle_t* **handle*, *httpd_ssl_config_t* **config*)

Create a SSL capable HTTP server (secure mode may be disabled in config)

Return success

Parameters

- `config`: - server config, must not be const. Does not have to stay valid after calling this function.
- `handle`: - storage for the server handle, must be a valid pointer

void **httpd_ssl_stop**(*httpd_handle_t* *handle*)

Stop the server. Blocks until the server is shut down.

Parameters

- `handle`:

Structures

struct httpd_ssl_config

HTTPS server config struct

Please use HTTPD_SSL_CONFIG_DEFAULT() to initialize it.

Public Members

httpd_config_t **httpd**

Underlying HTTPD server config

Parameters like task stack size and priority can be adjusted here.

const uint8_t ***cacert_pem**

CA certificate

size_t **cacert_len**

CA certificate byte length

const uint8_t ***prvtkey_pem**

Private key

size_t **prvtkey_len**

Private key byte length

httpd_ssl_transport_mode_t **transport_mode**

Transport Mode (default secure)

uint16_t **port_secure**

Port used when transport mode is secure (default 443)

uint16_t **port_insecure**

Port used when transport mode is insecure (default 80)

Macros

HTTPD_SSL_CONFIG_DEFAULT()

Default config struct init

(http_server default config had to be copied for customization)

Notes:

- port is set when starting the server, according to 'transport_mode'
- one socket uses ~ 40kB RAM with SSL, we reduce the default socket count to 4
- SSL sockets are usually long-lived, closing LRU prevents pool exhaustion DOS

- Stack size may need adjustments depending on the user application

Type Definitions

`typedef struct` *httpd_ssl_config* `httpd_ssl_config_t`

Enumerations

`enum httpd_ssl_transport_mode_t`

Values:

`HTTPD_SSL_TRANSPORT_SECURE`

`HTTPD_SSL_TRANSPORT_INSECURE`

3.4.6 ASIO port

Overview

Asio is a cross-platform C++ library, see https://think-async.com. It provides a consistent asynchronous model using a modern C++ approach.

ASIO documentation

Please refer to the original asio documentation at https://think-async.com/Asio/Documentation. Asio also comes with a number of examples which could be find under Documentation/Examples on that web site.

Supported features

ESP platform port currently supports only network asynchronous socket operations; does not support serial port and ssl. Internal asio settings for ESP include - EXCEPTIONS: Supported, choice in menuconfig - SIGNAL, SIGACTION: Not supported - EPOLL, EVENTFD: Not supported - TYPEID: Disabled by default, but supported in toolchain and asio (provided stdlib recompiled with -frtti)

Application Example

ESP examples are based on standard asio examples *examples/protocols/asio*: - udp_echo_server - tcp_echo_server - chat_client - chat_server Please refer to the specific example README.md for details

3.4.7 ESP-MQTT

Overview

ESP-MQTT is an implementation of MQTT protocol client (MQTT is a lightweight publish/subscribe messaging protocol).

Features

- supports MQTT over TCP, SSL with mbedtls, MQTT over Websocket, MQTT over Websocket Secure.
- Easy to setup with URI
- Multiple instances (Multiple clients in one application)
- Support subscribing, publishing, authentication, will messages, keep alive pings and all 3 QoS levels (it should be a fully functional client).

Application Example

- protocols/mqtt/tcp: MQTT over tcp, default port 1883
- protocols/mqtt/ssl: MQTT over tcp, default port 8883
- protocols/mqtt/ws: MQTT over Websocket, default port 80
- protocols/mqtt/wss: MQTT over Websocket Secure, default port 443

Configuration

URI

- Curently support `mqtt`, `mqtts`, `ws`, `wss` schemes
- MQTT over TCP samples:
  - `mqtt://mqtt.eclipse.org`: MQTT over TCP, default port 1883:
  - `mqtt://mqtt.eclipse.org:1884` MQTT over TCP, port 1884:
  - `mqtt://username:password@mqtt.eclipse.org:1884` MQTT over TCP, port 1884, with username and password
- MQTT over SSL samples:
  - `mqtts://mqtt.eclipse.org`: MQTT over SSL, port 8883
  - `mqtts://mqtt.eclipse.org:8884`: MQTT over SSL, port 8884
- MQTT over Websocket samples:

  - ws://mqtt.eclipse.org:80/mqtt

- MQTT over Websocket Secure samples:
  - wss://mqtt.eclipse.org:443/mqtt

- Minimal configurations:

```
const esp_mqtt_client_config_t mqtt_cfg = {
    .uri = "mqtt://mqtt.eclipse.org",
    .event_handle = mqtt_event_handler,
    // .user_context = (void *)your_context
};
```

- If there are any options related to the URI in `esp_mqtt_client_config_t`, the option defined by the URI will be overridden. Sample:

```
const esp_mqtt_client_config_t mqtt_cfg = {
    .uri = "mqtt://mqtt.eclipse.org:1234",
    .event_handle = mqtt_event_handler,
    .port = 4567,
};
//MQTT client will connect to mqtt.eclipse.org using port 4567
```

SSL

- Get certificate from server, example: `mqtt.eclipse.org openssl s_client -showcerts -connect mqtt.eclipse.org:8883 </dev/null 2>/dev/null|openssl x509 -outform PEM >mqtt_eclipse_org.pem`
- Check the sample application: `examples/mqtt_ssl`
- Configuration:

```
const esp_mqtt_client_config_t mqtt_cfg = {
    .uri = "mqtts://mqtt.eclipse.org:8883",
    .event_handle = mqtt_event_handler,
    .cert_pem = (const char *)mqtt_eclipse_org_pem_start,
};
```

For more options on `esp_mqtt_client_config_t`, please refer to API reference below

Change settings in `menuconfig`

:: make menuconfig -> Component config -> ESP-MQTT Configuration

- *CONFIG_MQTT_PROTOCOL_311*: Enables 3.1.1 version of MQTT protocol
- *CONFIG_MQTT_TRANSPORT_SSL*, *CONFIG_MQTT_TRANSPORT_WEBSOCKET*: Enables specific MQTT transport layer, such as SSL, WEBSOCKET, WEBSOCKET_SECURE
- *CONFIG_MQTT_CUSTOM_OUTBOX*: Disables default implementation of mqtt_outbox, so a specific implementaion can be supplied

API Reference

Header File

- mqtt/esp-mqtt/include/mqtt_client.h

Functions

esp_mqtt_client_handle_t **esp_mqtt_client_init**(**const** *esp_mqtt_client_config_t* **config*)

Creates mqtt client handle based on the configuration.

Return mqtt_client_handle if successfully created, NULL on error

Parameters

- `config`: mqtt configuration structure

esp_err_t **esp_mqtt_client_set_uri**(*esp_mqtt_client_handle_t* *client*, **const** char **uri*)

Sets mqtt connection URI. This API is usually used to overrides the URI configured in esp_mqtt_client_init.

Return ESP_FAIL if URI parse error, ESP_OK on success

Parameters

- `client`: mqtt client handle
- `uri`:

esp_err_t **esp_mqtt_client_start**(*esp_mqtt_client_handle_t* *client*)

Starts mqtt client with already created client handle.

Return ESP_OK on success ESP_ERR_INVALID_ARG on wrong initialization ESP_FAIL on other error

Parameters

- `client`: mqtt client handle

esp_err_t **esp_mqtt_client_reconnect**(*esp_mqtt_client_handle_t client*)

This api is typically used to force reconnection upon a specific event.

Return ESP_OK on success ESP_FAIL if client is in invalid state

Parameters

- `client`: mqtt client handle

esp_err_t **esp_mqtt_client_disconnect**(*esp_mqtt_client_handle_t client*)

This api is typically used to force disconnection from the broker.

Return ESP_OK on success

Parameters

- `client`: mqtt client handle

esp_err_t **esp_mqtt_client_stop**(*esp_mqtt_client_handle_t client*)

Stops mqtt client tasks.

- Notes:
- Cannot be called from the mqtt event handler

Return ESP_OK on success ESP_FAIL if client is in invalid state

Parameters

- `client`: mqtt client handle

int **esp_mqtt_client_subscribe**(*esp_mqtt_client_handle_t client*, **const** char ***topic*, int *qos*)

Subscribe the client to defined topic with defined qos.

Notes:

- Client must be connected to send subscribe message
- This API is could be executed from a user task or from a mqtt event callback i.e. internal mqtt task (API is protected by internal mutex, so it might block if a longer data receive operation is in progress.

Return message_id of the subscribe message on success -1 on failure

Parameters

- `client`: mqtt client handle
- `topic`:
- `qos`:

int **esp_mqtt_client_unsubscribe**(*esp_mqtt_client_handle_t client*, **const** char **topic*)

Unsubscribe the client from defined topic.

Notes:

- Client must be connected to send unsubscribe message
- It is thread safe, please refer to `esp_mqtt_client_subscribe` for details

Return message_id of the subscribe message on success -1 on failure

Parameters

- `client`: mqtt client handle
- `topic`:

int **esp_mqtt_client_publish**(*esp_mqtt_client_handle_t client*, **const** char **topic*, **const** char **data*, int *len*, int *qos*, int *retain*)

Client to send a publish message to the broker.

Notes:

- This API might block for several seconds, either due to network timeout (10s) or if publishing payloads longer than internal buffer (due to message fragmentation)
- Client doesn' t have to be connected for this API to work, enqueueing the messages with qos>1 (returning -1 for all the qos=0 messages if disconnected). If MQTT_SKIP_PUBLISH_IF_DISCONNECTED is enabled, this API will not attempt to publish when the client is not connected and will always return -1.
- It is thread safe, please refer to `esp_mqtt_client_subscribe` for details

Return message_id of the publish message (for QoS 0 message_id will always be zero) on success. -1 on failure.

Parameters

- `client`: mqtt client handle
- `topic`: topic string
- `data`: payload string (set to NULL, sending empty payload message)
- `len`: data length, if set to 0, length is calculated from payload string
- `qos`: qos of publish message
- `retain`: retain flag

int **esp_mqtt_client_enqueue**(*esp_mqtt_client_handle_t client*, **const** char **topic*, **const** char **data*, int *len*, int *qos*, int *retain*, bool *store*)

Enqueue a message to the outbox, to be sent later. Typically used for messages with qos>0, but could be also used for qos=0 messages if store=true.

This API generates and stores the publish message into the internal outbox and the actual sending to the network is performed in the mqtt-task context (in contrast to the esp_mqtt_client_publish() which sends the publish message immediately in the user task' s context). Thus, it could be used as a non blocking version of esp_mqtt_client_publish().

Return message_id if queued successfully, -1 otherwise

Parameters

- `client`: mqtt client handle
- `topic`: topic string
- `data`: payload string (set to NULL, sending empty payload message)
- `len`: data length, if set to 0, length is calculated from payload string
- `qos`: qos of publish message
- `retain`: retain flag
- `store`: if true, all messages are enqueued; otherwise only qos1 and qos 2 are enqueued

esp_err_t **esp_mqtt_client_destroy**(*esp_mqtt_client_handle_t client*)

Destroys the client handle.

Notes:

- Cannot be called from the mqtt event handler

Return ESP_OK

Parameters

- `client`: mqtt client handle

esp_err_t **esp_mqtt_set_config**(*esp_mqtt_client_handle_t client*, **const** *esp_mqtt_client_config_t* **config*)

Set configuration structure, typically used when updating the config (i.e. on "before_connect" event.

Return ESP_ERR_NO_MEM if failed to allocate ESP_OK on success

Parameters

- `client`: mqtt client handle
- `config`: mqtt configuration structure

esp_err_t **esp_mqtt_client_register_event**(*esp_mqtt_client_handle_t client*, *esp_mqtt_event_id_t event*, *esp_event_handler_t event_handler*, void **event_handler_arg*)

Registers mqtt event.

Return ESP_ERR_NO_MEM if failed to allocate ESP_OK on success

Parameters

- `client`: mqtt client handle
- `event`: event type
- `event_handler`: handler callback
- `event_handler_arg`: handlers context

int **esp_mqtt_client_get_outbox_size**(*esp_mqtt_client_handle_t client*)

Get outbox size.

Return outbox size

Parameters

- `client`: mqtt client handle

Structures

struct esp_mqtt_error_codes

MQTT error code structure to be passed as a contextual information into ERROR event.

Important: This structure extends `esp_tls_last_error` error structure and is backward compatible with it (so might be down-casted and treated as `esp_tls_last_error` error, but recommended to update applications if used this way previously)

Use this structure directly checking error_type first and then appropriate error code depending on the source of the error:

| error_type | related member variables | note | | MQTT_ERROR_TYPE_TCP_TRANSPORT | esp_tls_last_esp_err, esp_tls_stack_err, esp_tls_cert_verify_flags, sock_errno | Error reported from tcp_transport/esp-tls | | MQTT_ERROR_TYPE_CONNECTION_REFUSED | connect_return_code | Internal error reported from MQTT broker on connection |

Public Members

esp_err_t **esp_tls_last_esp_err**

last esp_err code reported from esp-tls component

int **esp_tls_stack_err**

tls specific error code reported from underlying tls stack

int **esp_tls_cert_verify_flags**

tls flags reported from underlying tls stack during certificate verification

esp_mqtt_error_type_t **error_type**
error type referring to the source of the error

esp_mqtt_connect_return_code_t **connect_return_code**
connection refused error code reported from MQTT broker on connection

int **esp_transport_sock_errno**
errno from the underlying socket

struct esp_mqtt_event_t
MQTT event configuration structure

Public Members

esp_mqtt_event_id_t **event_id**
MQTT event type

esp_mqtt_client_handle_t **client**
MQTT client handle for this event

void ***user_context**
User context passed from MQTT client config

char ***data**
Data associated with this event

int **data_len**
Length of the data for this event

int **total_data_len**
Total length of the data (longer data are supplied with multiple events)

int **current_data_offset**
Actual offset for the data associated with this event

char ***topic**
Topic associated with this event

int **topic_len**
Length of the topic for this event associated with this event

int **msg_id**
MQTT messaged id of message

int **session_present**
MQTT session_present flag for connection event

esp_mqtt_error_codes_t ***error_handle**
esp-mqtt error handle including esp-tls errors as well as internal mqtt errors

`struct esp_mqtt_client_config_t`

MQTT client configuration structure

Public Members

mqtt_event_callback_t **event_handle**

handle for MQTT events as a callback in legacy mode

esp_event_loop_handle_t **event_loop_handle**

handle for MQTT event loop library

const char ***host**

MQTT server domain (ipv4 as string)

const char ***uri**

Complete MQTT broker URI

uint32_t **port**

MQTT server port

const char ***client_id**

default client id is `ESP32_CHIPID%` where CHIPID% are last 3 bytes of MAC address in hex format

const char ***username**

MQTT username

const char ***password**

MQTT password

const char ***lwt_topic**

LWT (Last Will and Testament) message topic (NULL by default)

const char ***lwt_msg**

LWT message (NULL by default)

int **lwt_qos**

LWT message qos

int **lwt_retain**

LWT retained message flag

int **lwt_msg_len**

LWT message length

int **disable_clean_session**

mqtt clean session, default clean_session is true

int **keepalive**

mqtt keepalive, default is 120 seconds

bool **disable_auto_reconnect**

this mqtt client will reconnect to server (when errors/disconnect). Set disable_auto_reconnect=true to disable

void ***user_context**

pass user context to this option, then can receive that context in `event->user_context`

int **task_prio**

MQTT task priority, default is 5, can be changed in `make menuconfig`

int **task_stack**

MQTT task stack size, default is 6144 bytes, can be changed in `make menuconfig`

int **buffer_size**

size of MQTT send/receive buffer, default is 1024 (only receive buffer size if `out_buffer_size` defined)

const char ***cert_pem**

Pointer to certificate data in PEM or DER format for server verify (with SSL), default is NULL, not required to verify the server. PEM-format must have a terminating NULL-character. DER-format requires the length to be passed in cert_len.

size_t **cert_len**

Length of the buffer pointed to by cert_pem. May be 0 for null-terminated pem

const char ***client_cert_pem**

Pointer to certificate data in PEM or DER format for SSL mutual authentication, default is NULL, not required if mutual authentication is not needed. If it is not NULL, also `client_key_pem` has to be provided. PEM-format must have a terminating NULL-character. DER-format requires the length to be passed in client_cert_len.

size_t **client_cert_len**

Length of the buffer pointed to by client_cert_pem. May be 0 for null-terminated pem

const char ***client_key_pem**

Pointer to private key data in PEM or DER format for SSL mutual authentication, default is NULL, not required if mutual authentication is not needed. If it is not NULL, also `client_cert_pem` has to be provided. PEM-format must have a terminating NULL-character. DER-format requires the length to be passed in client_key_len

size_t **client_key_len**

Length of the buffer pointed to by client_key_pem. May be 0 for null-terminated pem

esp_mqtt_transport_t **transport**

overrides URI transport

int **refresh_connection_after_ms**

Refresh connection after this value (in milliseconds)

const struct psk_key_hint ***psk_hint_key**

Pointer to PSK struct defined in esp_tls.h to enable PSK authentication (as alternative to certificate verification). If not NULL and server/client certificates are NULL, PSK is enabled

bool **use_global_ca_store**

Use a global ca_store for all the connections in which this bool is set.

int **reconnect_timeout_ms**

Reconnect to the broker after this value in miliseconds if auto reconnect is not disabled (defaults to 10s)

const char ****alpn_protos**

NULL-terminated list of supported application protocols to be used for ALPN

const char ***clientkey_password**

Client key decryption password string

int **clientkey_password_len**

String length of the password pointed to by clientkey_password

esp_mqtt_protocol_ver_t **protocol_ver**

MQTT protocol version used for connection, defaults to value from menuconfig

int **out_buffer_size**

size of MQTT output buffer. If not defined, both output and input buffers have the same size defined as `buffer_size`

bool **skip_cert_common_name_check**

Skip any validation of server certificate CN field, this reduces the security of TLS and makes the mqtt client susceptible to MITM attacks

bool **use_secure_element**

enable secure element for enabling SSL connection

void ***ds_data**

carrier of handle for digital signature parameters

int **network_timeout_ms**

Abort network operation if it is not completed after this value, in milliseconds (defaults to 10s)

bool **disable_keepalive**

Set disable_keepalive=true to turn off keep-alive mechanism, false by default (keepalive is active by default). Note: setting the config value `keepalive` to `0` doesn't disable keepalive feature, but uses a default keepalive period

Macros

`MQTT_ERROR_TYPE_ESP_TLS`

MQTT_ERROR_TYPE_TCP_TRANSPORT error type hold all sorts of transport layer errors, in-

cluding ESP-TLS error, but in the past only the errors from MQTT_ERROR_TYPE_ESP_TLS layer were reported, so the ESP-TLS error type is re-defined here for backward compatibility

Type Definitions

typedef struct esp_mqtt_client ***esp_mqtt_client_handle_t**

typedef struct *esp_mqtt_error_codes* **esp_mqtt_error_codes_t**

MQTT error code structure to be passed as a contextual information into ERROR event.

Important: This structure extends `esp_tls_last_error` error structure and is backward compatible with it (so might be down-casted and treated as `esp_tls_last_error` error, but recommended to update applications if used this way previously)

Use this structure directly checking error_type first and then appropriate error code depending on the source of the error:

| error_type | related member variables | note | | MQTT_ERROR_TYPE_TCP_TRANSPORT | esp_tls_last_esp_err, esp_tls_stack_err, esp_tls_cert_verify_flags, sock_errno | Error reported from tcp_transport/esp-tls | | MQTT_ERROR_TYPE_CONNECTION_REFUSED | connect_return_code | Internal error reported from MQTT broker on connection |

typedef *esp_mqtt_event_t* ***esp_mqtt_event_handle_t**

typedef *esp_err_t* (***mqtt_event_callback_t**)(*esp_mqtt_event_handle_t* event)

Enumerations

enum esp_mqtt_event_id_t

MQTT event types.

User event handler receives context data in *esp_mqtt_event_t* structure with

- `user_context` - user data from *esp_mqtt_client_config_t*
- `client` - mqtt client handle
- various other data depending on event type

Values:

`MQTT_EVENT_ANY` = -1

`MQTT_EVENT_ERROR` = 0

on error event, additional context: connection return code, error handle from *esp_tls* (if supported)

`MQTT_EVENT_CONNECTED`

connected event, additional context: session_present flag

`MQTT_EVENT_DISCONNECTED`
: disconnected event

`MQTT_EVENT_SUBSCRIBED`
: subscribed event, additional context: msg_id

`MQTT_EVENT_UNSUBSCRIBED`
: unsubscribed event

`MQTT_EVENT_PUBLISHED`
: published event, additional context: msg_id

`MQTT_EVENT_DATA`
: data event, additional context:

  - msg_id message id
  - topic pointer to the received topic
  - topic_len length of the topic
  - data pointer to the received data
  - data_len length of the data for this event
  - current_data_offset offset of the current data for this event
  - total_data_len total length of the data received Note: Multiple MQTT_EVENT_DATA could be fired for one message, if it is longer than internal buffer. In that case only first event contains topic pointer and length, other contain data only with current data length and current data offset updating.

`MQTT_EVENT_BEFORE_CONNECT`
: The event occurs before connecting

`MQTT_EVENT_DELETED`
: Notification on delete of one message from the internal outbox, if the message couldn' t have been sent and acknowledged before expiring defined in OUTBOX_EXPIRED_TIMEOUT_MS. (events are not posted upon deletion of successfully acknowledged messages)

  - This event id is posted only if MQTT_REPORT_DELETED_MESSAGES==1
  - Additional context: msg_id (id of the deleted message).

`enum esp_mqtt_connect_return_code_t`
: MQTT connection error codes propagated via ERROR event

  Values:

  `MQTT_CONNECTION_ACCEPTED` = 0
  : Connection accepted

MQTT_CONNECTION_REFUSE_PROTOCOL

MQTT connection refused reason: Wrong protocol

MQTT_CONNECTION_REFUSE_ID_REJECTED

MQTT connection refused reason: ID rejected

MQTT_CONNECTION_REFUSE_SERVER_UNAVAILABLE

MQTT connection refused reason: Server unavailable

MQTT_CONNECTION_REFUSE_BAD_USERNAME

MQTT connection refused reason: Wrong user

MQTT_CONNECTION_REFUSE_NOT_AUTHORIZED

MQTT connection refused reason: Wrong username or password

enum esp_mqtt_error_type_t

MQTT connection error codes propagated via ERROR event

Values:

MQTT_ERROR_TYPE_NONE = 0

MQTT_ERROR_TYPE_TCP_TRANSPORT

MQTT_ERROR_TYPE_CONNECTION_REFUSED

enum esp_mqtt_transport_t

Values:

MQTT_TRANSPORT_UNKNOWN = 0x0

MQTT_TRANSPORT_OVER_TCP

MQTT over TCP, using scheme: `mqtt`

MQTT_TRANSPORT_OVER_SSL

MQTT over SSL, using scheme: `mqtts`

MQTT_TRANSPORT_OVER_WS

MQTT over Websocket, using scheme:: `ws`

MQTT_TRANSPORT_OVER_WSS

MQTT over Websocket Secure, using scheme: `wss`

enum esp_mqtt_protocol_ver_t

MQTT protocol version used for connection

Values:

MQTT_PROTOCOL_UNDEFINED = 0

MQTT_PROTOCOL_V_3_1

MQTT_PROTOCOL_V_3_1_1

3.4.8 ESP-Modbus

Overview

The Modbus serial communication protocol is de facto standard protocol widely used to connect industrial electronic devices. Modbus allows communication among many devices connected to the same network, for example, a system that measures temperature and humidity and communicates the results to a computer. The Modbus protocol uses several types of data: Holding Registers, Input Registers, Coils (single bit output), Discrete Inputs. Versions of the Modbus protocol exist for serial port and for Ethernet and other protocols that support the Internet protocol suite. There are many variants of Modbus protocols, some of them are:

- `Modbus RTU` —This is used in serial communication and makes use of a compact, binary representation of the data for protocol communication. The RTU format follows the commands/data with a cyclic redundancy check checksum as an error check mechanism to ensure the reliability of data. Modbus RTU is the most common implementation available for Modbus. A Modbus RTU message must be transmitted continuously without inter-character hesitations. Modbus messages are framed (separated) by idle (silent) periods. The RS-485 interface communication is usually used for this type.
- `Modbus ASCII` —This is used in serial communication and makes use of ASCII characters for protocol communication. The ASCII format uses a longitudinal redundancy check checksum. Modbus ASCII messages are framed by leading colon (":") and trailing newline (CR/LF).
- `Modbus TCP/IP or Modbus TCP` —This is a Modbus variant used for communications over TCP/IP networks, connecting over port 502. It does not require a checksum calculation, as lower layers already provide checksum protection.

Modbus slave interface API overview

ESP-IDF supports Modbus slave protocol and provides modbus_controller interface API to interact with user application. The interface API functions below are used to setup and use Modbus slave stack from application and could be executed in next order:

The files deviceparams.c/h contain the user structures which represent Modbus parameters accessed by stack. These parameters should be prepared by user and be assigned to the modbus_controller interface using *`mbcontroller_set_descriptor()`* API call before start of communication.

esp_err_t **mbcontroller_init**(void)

Initialize modbus controller and stack.

Return

- ESP_OK Success
- ESP_FAIL Parameter error

The function initializes the Modbus controller interface and its active context (tasks, RTOS objects and other resources).

esp_err_t **mbcontroller_setup**(mb_communication_info_t *comm_info*)

Set Modbus communication parameters for the controller.

Return

- ESP_OK Success
- ESP_ERR_INVALID_ARG Incorrect parameter data

Parameters

- `comm_info`: Communication parameters structure.

The function is used to setup communication parameters of the Modbus stack. See the Modbus controller API documentation for more information.

esp_err_t **mbcontroller_set_descriptor**(mb_register_area_descriptor_t *descr_data*)

Set Modbus area descriptor.

Return

- ESP_OK: The appropriate descriptor is set
- ESP_ERR_INVALID_ARG: The argument is incorrect

Parameters

- `descr_data`: Modbus registers area descriptor structure

The function initializes Modbus communication descriptors for each type of Modbus register area (Holding Registers, Input Registers, Coils (single bit output), Discrete Inputs). Once areas are initialized and the *mbcontroller_start()* API is called the Modbus stack can access the data in user data structures by request from master. See the `mb_register_area_descriptor_t` for more information.

esp_err_t **mbcontroller_start**(void)

Start Modbus communication stack.

Return

- ESP_OK Success
- ESP_ERR_INVALID_ARG Modbus stack start error

Modbus controller start function. Starts stack and interface and allows communication.

mb_event_group_t **mbcontroller_check_event**(mb_event_group_t *group*)

Wait for specific event on parameter change.

Return

- mb_event_group_t event bits triggered

Parameters

- `group`: Group event bit mask to wait for change

The blocking call to function waits for event specified in the input parameter as event mask. Once master access the parameter and event mask matches the parameter the application task will be unblocked and function will return ESP_OK. See the `mb_event_group_t` for more information about Modbus event masks.

esp_err_t **mbcontroller_get_param_info**(mb_param_info_t **reg_info*, uint32_t *timeout*)

Get parameter information.

Return

- ESP_OK Success
- ESP_ERR_TIMEOUT Can not get data from parameter queue or queue overflow

Parameters

- `reg_info`: parameter info structure
- `timeout`: Timeout in milliseconds to read information from parameter queue

The function gets information about accessed parameters from modbus controller event queue. The KConfig 'CONFIG_MB_CONTROLLER_NOTIFY_QUEUE_SIZE' key can be used to configure the notification queue size. The timeout parameter allows to specify timeout for waiting notification. The `mb_param_info_t` structure contain information about accessed parameter.

esp_err_t **mbcontroller_destroy**(void)

Destroy Modbus controller and stack.

Return

- ESP_OK Success
- ESP_FAIL Parameter error

This function stops Modbus communication stack and destroys controller interface.

There are some configuration parameters modbus_controller interface and Modbus stack can be configured using KConfig values in "Modbus configuration" menu. See the example application for more information about how to use these API functions.

Application Example

The example uses the FreeModbus library port for slave implementation:

protocols/modbus_slave

3.4.9 ESP WebSocket Client

Overview

The ESP WebSocket client is an implementation of WebSocket protocol client for ESP32

Features

- supports WebSocket over TCP, SSL with mbedtls
- Easy to setup with URI
- Multiple instances (Multiple clients in one application)

Configuration

URI

- Supports `ws`, `wss` schemes
- WebSocket samples:
  - `ws://websocket.org`: WebSocket over TCP, default port 80
  - `wss://websocket.org`: WebSocket over SSL, default port 443
- Minimal configurations:

```
const esp_websocket_client_config_t ws_cfg = {
    .uri = "ws://websocket.org",
};
```

- If there are any options related to the URI in `esp_websocket_client_config_t`, the option defined by the URI will be overridden. Sample:

```
const esp_websocket_client_config_t ws_cfg = {
    .uri = "ws://websocket.org:123",
    .port = 4567,
};
//WebSocket client will connect to websocket.org using port 4567
```

SSL

- Get certificate from server, example: `websocket.org openssl s_client -showcerts -connect websocket.org:443 </dev/null 2>/dev/null|openssl x509 -outform PEM >websocket_org.`

pem

- Configuration:

```
const esp_websocket_client_config_t ws_cfg = {
    .uri = "wss://websocket.org",
    .cert_pem = (const char *)websocket_org_pem_start,
};
```

For more options on `esp_websocket_client_config_t`, please refer to API reference below

Application Example

Simple WebSocket example that uses esp_websocket_client to establish a websocket connection and send/receive data with the websocket.org Server: protocols/websocket.

API Reference

Header File

- esp_websocket_client/include/esp_websocket_client.h

Functions

esp_websocket_client_handle_t **esp_websocket_client_init**(**const** *esp_websocket_client_config_t* **config*)

Start a Websocket session This function must be the first function to call, and it returns a esp_websocket_client_handle_t that you must use as input to other functions in the interface. This call MUST have a corresponding call to esp_websocket_client_destroy when the operation is complete.

Return

- `esp_websocket_client_handle_t`
- NULL if any errors

Parameters

- `config`: The configuration

esp_err_t **esp_websocket_client_set_uri**(*esp_websocket_client_handle_t* *client*, **const** char **uri*)

Set URL for client, when performing this behavior, the options in the URL will replace the old ones Must stop the WebSocket client before set URI if the client has been connected.

Return esp_err_t

Parameters

- `client`: The client
- `uri`: The uri

esp_err_t **esp_websocket_client_start**(*esp_websocket_client_handle_t client*)

Open the WebSocket connection.

Return esp_err_t

Parameters

- `client`: The client

esp_err_t **esp_websocket_client_stop**(*esp_websocket_client_handle_t client*)

Close the WebSocket connection.

Notes:

- Cannot be called from the websocket event handler

Return esp_err_t

Parameters

- `client`: The client

esp_err_t **esp_websocket_client_destroy**(*esp_websocket_client_handle_t client*)

Destroy the WebSocket connection and free all resources. This function must be the last function to call for an session. It is the opposite of the esp_websocket_client_init function and must be called with the same handle as input that a esp_websocket_client_init call returned. This might close all connections this handle has used.

Notes:

- Cannot be called from the websocket event handler

Return esp_err_t

Parameters

- `client`: The client

int **esp_websocket_client_send**(*esp_websocket_client_handle_t client*, **const** char **data*, int *len*, TickType_t *timeout*)

Generic write data to the WebSocket connection; defaults to binary send.

Return

- Number of data was sent

- (-1) if any errors

Parameters

- `client`: The client
- `data`: The data
- `len`: The length
- `timeout`: Write data timeout in RTOS ticks

int **esp_websocket_client_send_bin**(*esp_websocket_client_handle_t client*, **const** char **data*, int *len*, TickType_t *timeout*)

Write binary data to the WebSocket connection (data send with WS OPCODE=02, i.e. binary)

Return

- Number of data was sent
- (-1) if any errors

Parameters

- `client`: The client
- `data`: The data
- `len`: The length
- `timeout`: Write data timeout in RTOS ticks

int **esp_websocket_client_send_text**(*esp_websocket_client_handle_t client*, **const** char **data*, int *len*, TickType_t *timeout*)

Write textual data to the WebSocket connection (data send with WS OPCODE=01, i.e. text)

Return

- Number of data was sent
- (-1) if any errors

Parameters

- `client`: The client
- `data`: The data
- `len`: The length
- `timeout`: Write data timeout in RTOS ticks

bool **esp_websocket_client_is_connected**(*esp_websocket_client_handle_t client*)

Check the WebSocket client connection state.

Return

- true
- false

Parameters

- `client`: The client handle

esp_err_t **esp_websocket_register_events**(*esp_websocket_client_handle_t* *client*, *esp_websocket_event_id_t* *event*, *esp_event_handler_t* *event_handler*, void **event_handler_arg*)

Register the Websocket Events.

Return esp_err_t

Parameters

- `client`: The client handle
- `event`: The event id
- `event_handler`: The callback function
- `event_handler_arg`: User context

Structures

struct esp_websocket_event_data_t

Websocket event data.

Public Members

const char ***data_ptr**

Data pointer

int **data_len**

Data length

uint8_t **op_code**

Received opcode

esp_websocket_client_handle_t **client**

esp_websocket_client_handle_t context

void ***user_context**

user_data context, from *esp_websocket_client_config_t* user_data

int **payload_len**

Total payload length, payloads exceeding buffer will be posted through multiple events

int **payload_offset**

Actual offset for the data associated with this event

struct esp_websocket_client_config_t

Websocket client setup configuration.

Public Members

const char ***uri**

Websocket URI, the information on the URI can be overrides the other fields below, if any

const char ***host**

Domain or IP as string

int **port**

Port to connect, default depend on esp_websocket_transport_t (80 or 443)

const char ***username**

Using for Http authentication - Not supported for now

const char ***password**

Using for Http authentication - Not supported for now

const char ***path**

HTTP Path, if not set, default is `/`

bool **disable_auto_reconnect**

Disable the automatic reconnect function when disconnected

void ***user_context**

HTTP user data context

int **task_prio**

Websocket task priority

int **task_stack**

Websocket task stack

int **buffer_size**

Websocket buffer size

const char ***cert_pem**

SSL Certification, PEM format as string, if the client requires to verify server

esp_websocket_transport_t **transport**

Websocket transport type, see 'esp_websocket_transport_t

char *subprotocol
: Websocket subprotocol

char *user_agent
: Websocket user-agent

char *headers
: Websocket additional headers

int pingpong_timeout_sec
: Period before connection is aborted due to no PONGs received, disabled if value is 0

bool keep_alive_enable
: Enable keep-alive timeout

int keep_alive_idle
: Keep-alive idle time. Default is 5 (second)

int keep_alive_interval
: Keep-alive interval time. Default is 5 (second)

int keep_alive_count
: Keep-alive packet retry send count. Default is 3 counts

Type Definitions

typedef struct esp_websocket_client *esp_websocket_client_handle_t

Enumerations

enum esp_websocket_event_id_t
: Websocket Client events id.

Values:

WEBSOCKET_EVENT_ANY = -1

WEBSOCKET_EVENT_ERROR = 0
: This event occurs when there are any errors during execution

WEBSOCKET_EVENT_CONNECTED
: Once the Websocket has been connected to the server, no data exchange has been performed

WEBSOCKET_EVENT_DISCONNECTED
: The connection has been disconnected

WEBSOCKET_EVENT_DATA
: When receiving data from the server, possibly multiple portions of the packet

WEBSOCKET_EVENT_MAX

enum esp_websocket_transport_t

Websocket Client transport.

Values:

WEBSOCKET_TRANSPORT_UNKNOWN = 0x0

Transport unknown

WEBSOCKET_TRANSPORT_OVER_TCP

Transport over tcp

WEBSOCKET_TRANSPORT_OVER_SSL

Transport over ssl

Example code for this API section is provided in protocols directory of ESP-IDF examples.

3.4.10 IP Network Layer

Documentation for IP Network Layer protocols (below the Application Protocol layer) is provided in *Networking APIs*.

3.5 Provisioning API

3.5.1 Unified Provisioning

Overview

Unified provisioning support in the ESP-IDF provides an extensible mechanism to the developers to configure the device with the Wi-Fi credentials and/or other custom configuration using various transports and different security schemes. Depending on the use-case it provides a complete and ready solution for Wi-Fi network provisioning along with example iOS and Android applications. Or developers can extend the device-side and phone-app side implementations to accommodate their requirements for sending additional configuration data. Following are the important features of this implementation.

1. *Extensible Protocol:* The protocol is completely flexible and it offers the ability for the developers to send custom configuration in the provisioning process. The data representation too is left to the application to decide.
2. *Transport Flexibility:* The protocol can work on Wi-Fi (SoftAP + HTTP server) or on BLE as a transport protocol. The framework provides an ability to add support for any other transport easily as long as command-response behaviour can be supported on the transport.
3. *Security Scheme Flexibility:* It's understood that each use-case may require different security scheme to secure the data that is exchanged in the provisioning process. Some applications may work with SoftAP that' s WPA2 protected or BLE with "just-works" security. Or the applications may consider the

transport to be insecure and may want application level security. The unified provisioning framework allows application to choose the security as deemed suitable.

4. *Compact Data Representation:* The protocol uses Google Protobufs as a data representation for session setup and Wi-Fi provisioning. They provide a compact data representation and ability to parse the data in multiple programming languages in native format. Please note that this data representation is not forced on application specific data and the developers may choose the representation of their choice.

Typical Provisioning Process

Deciding on Transport

Unified provisioning subsystem supports Wi-Fi (SoftAP+HTTP server) and BLE (GATT based) transport schemes. Following points need to be considered while selecting the best possible transport for provisioning.

1. BLE based transport has an advantage that in the provisioning process, the BLE communication channel stays intact between the device and the client. That provides reliable provisioning feedback.
2. BLE based provisioning implementation makes the user-experience better from the phone apps as on Android and iOS both, the phone app can discover and connect to the device without requiring user to go out of the phone app
3. BLE transport however consumes ~110KB memory at runtime. If the product does not use the BLE or BT functionality after provisioning is done, almost all the memory can be reclaimed back and can be added into the heap.
4. SoftAP based transport is highly interoperable; however as the same radio is shared between SoftAP and Station interface, the transport is not reliable in the phase when the Wi-Fi connection to external AP is attempted. Also, the client may roam back to different network when the SoftAP changes the channel at the time of Station connection.
5. SoftAP transport does not require much additional memory for the Wi-Fi use-cases
6. SoftAP based provisioning requires the phone app user to go to "System Settings" to connect to Wi-Fi network hosted by the device in case of iOS. The discovery (scanning) as well as connection API is not available for the iOS applications.

Deciding on Security

Depending on the transport and other constraints the security scheme needs to be selected by the application developers. Following considerations need to be given from the provisioning security perspective: 1. The configuration data sent from the client to the device and the response has to be secured. 2. The client should authenticate the device it is connected to. 3. The device manufacturer may choose proof-of-possession - a unique per device secret to be entered on the provisioning client as a security measure to make sure that the user can provisions the device in the possession.

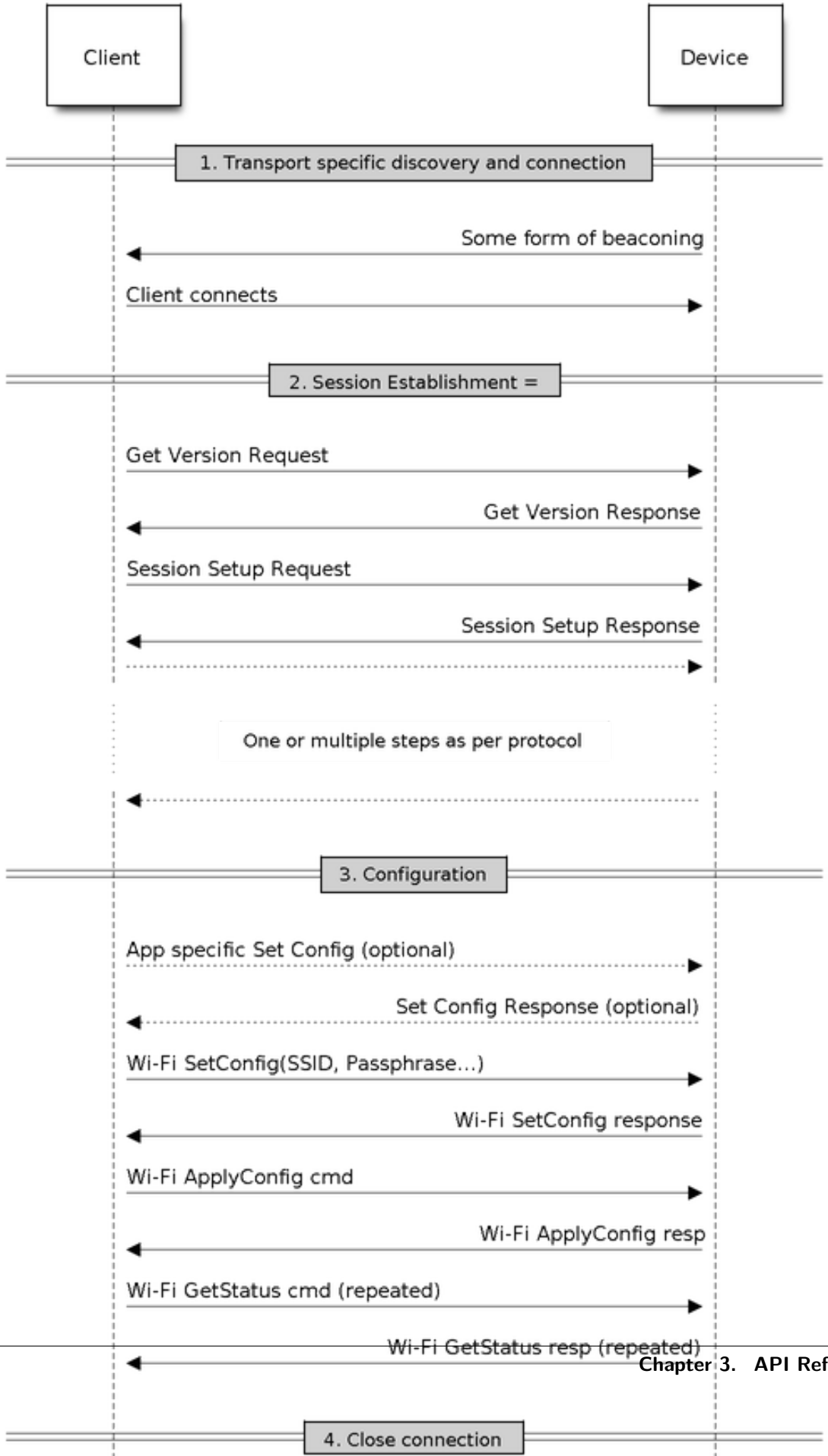
Client
Device
1. Transport specific discovery and connection
Some form of beaconing
Client connects
2. Session Establishment =
Get Version Request
Get Version Response
Session Setup Request
Session Setup Response
One or multiple steps as per protocol
3. Configuration
App specific Set Config (optional)
Set Config Response (optional)
Wi-Fi SetConfig(SSID, Passphrase...)
Wi-Fi SetConfig response
Wi-Fi ApplyConfig cmd
Wi-Fi ApplyConfig resp
Wi-Fi GetStatus cmd (repeated)
Wi-Fi GetStatus resp (repeated)
4. Close connection

There are two levels of security schemes. The developer may select one or combination depending on requirements.

1. *Transport Security:* SoftAP provisioning may choose WPA2 protected security with unique per-device passphrase. Per-device unique passphrase can also act as a proof-of-possession. For BLE, "just-works" security can be used as a transport level security after understanding the level of security it provides.
2. *Application Security:* The unified provisioning subsystem provides application level security (*security1*) that provides data protection and authentication (through proof-of-possession) if the application does not use the transport level security or if the transport level security is not sufficient for the use-case.

Device Discovery

The advertisement and device discovery is left to the application and depending on the protocol chosen, the phone apps and device firmware application can choose appropriate method to advertise and discovery.

For the SoftAP+HTTP transport, typically the SSID (network name) of the AP hosted by the device can be used for discovery.

For the BLE transport device name or primary service included in the advertisement or combination of both can be used for discovery.

Architecture

The below diagram shows architecture of unified provisioning.

It relies on the base layer called *Protocol Communication* (Protocol Communication) which provides a framework for security schemes and transport mechanisms. Wi-Fi Provisioning layer uses Protocomm to provide simple callbacks to the application for setting the configuration and getting the Wi-Fi status. The application has control over implementation of these callbacks. In addition application can directly use protocomm to register custom handlers.

Application creates a protocomm instance which is mapped to a specific transport and specific security scheme. Each transport in the protocomm has a concept of an "end-point" which corresponds to logical channel for communication for specific type of information. For example security handshake happens on a different endpoint than the Wi-Fi configuration endpoint. Each end-point is identified using a string and depending on the transport internal representation of the end-point changes. In case of SoftAP+HTTP transport the end-point corresponds to URI whereas in case of BLE the end-point corresponds to GATT characteristic with specific UUID. Developers can create custom end-points and implement handler for the data that is received or sent over the same end-point.

Security Schemes

At present unified provisioning supports two security schemes: 1. Security0 - No security (No encryption) 2. Security1 - Curve25519 based key exchange, shared key derivation and AES256-CTR mode encryption of

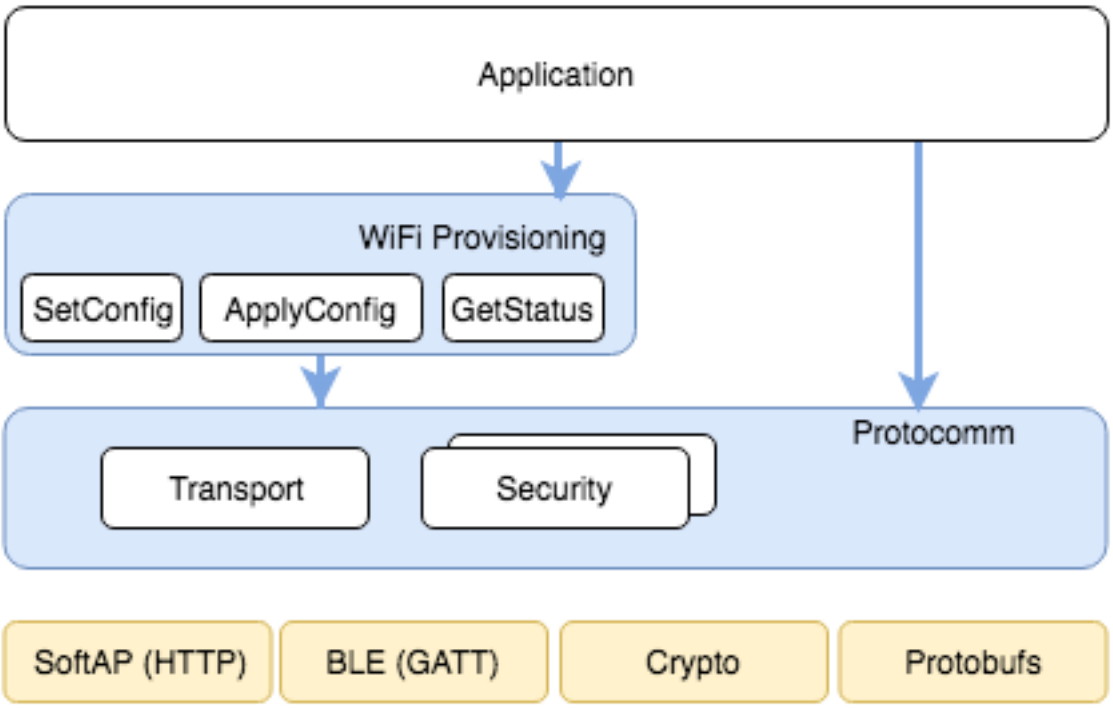

图 24: Unified Provisioning Architecture

the data. It supports two modes :

a. Authorized - Proof of Possession (PoP) string used to authorize session and derive shared key

b. No Auth (Null PoP) - Shared key derived through key exchange only

Security1 scheme details are shown in the below sequence diagram

Sample Code

Please refer to *Protocol Communication* and *Wi-Fi Provisioning* for API guides and code snippets on example usage.

Various use case implementations can be found as examples under provisioning.

Provisioning Tools

Provisioning applications are available for various platforms, along with source code:

- Android : esp-idf-provisioning-android
- iOS : esp-idf-provisioning-ios
- Linux/MacOS/Windows : tools/esp_prov (a python based command line tool for provisioning)

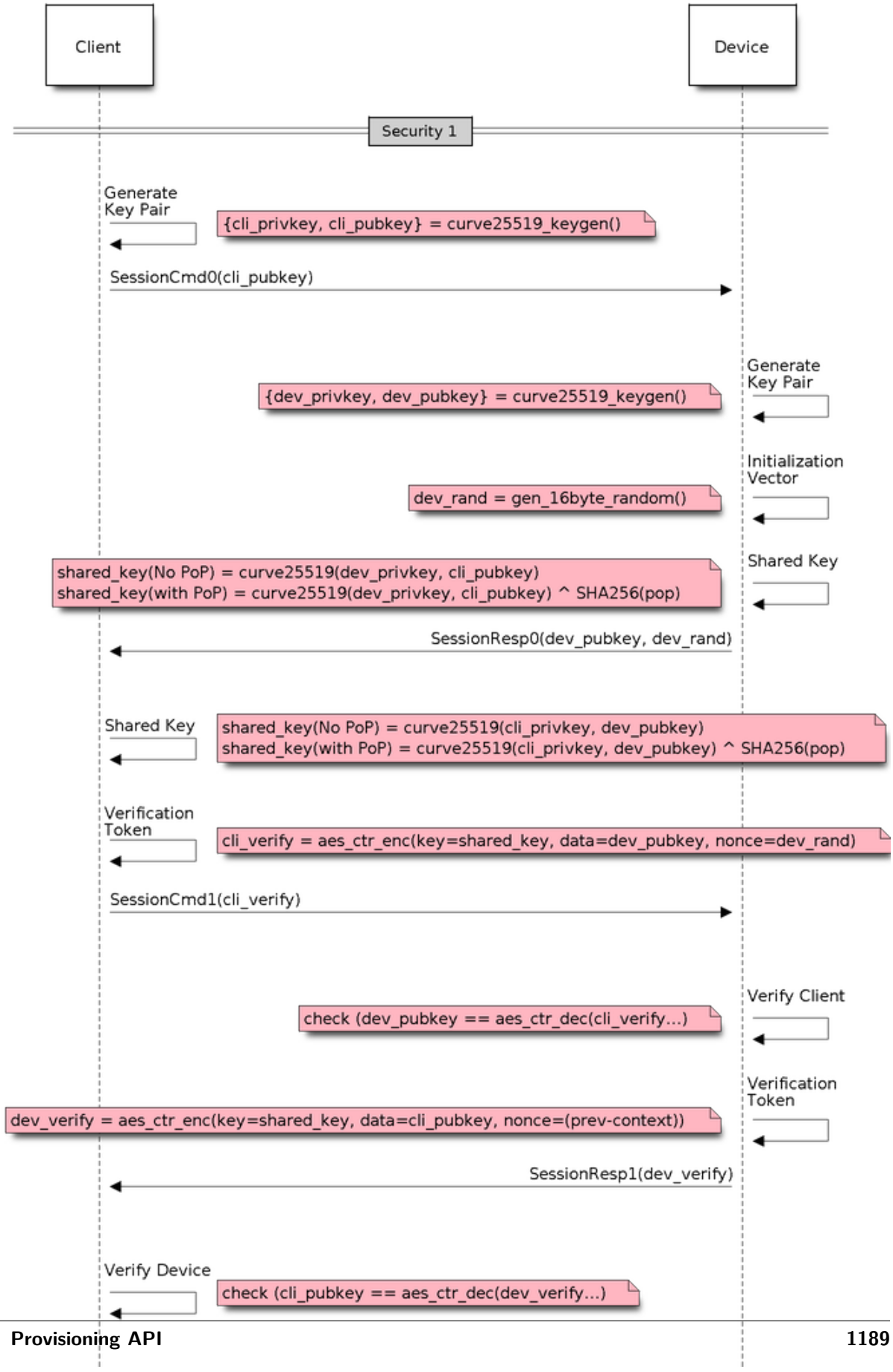

图 25: Security1

The phone applications offer simple UI and thus more user centric, while the command line application is useful as a debugging tool for developers.

3.5.2 Protocol Communication

Overview

Protocol Communication (protocomm) component manages secure sessions and provides framework for multiple transports. The application can also use protocomm layer directly to have application specific extensions for the provisioning (or non-provisioning) use cases.

Following features are available for provisioning :

- **Communication security at application level -**
  - protocomm_security0 (no security)
  - protocomm_security1 (curve25519 key exchange + AES-CTR encryption)
- Proof-of-possession (support with protocomm_security1 only)

Protocomm internally uses protobuf (protocol buffers) for secure session establishment. Though users can implement their own security (even without using protobuf). One can even use protocomm without any security layer.

Protocomm provides framework for various transports - WiFi (SoftAP+HTTPD), BLE, console - in which case the handler invocation is automatically taken care of on the device side (see Transport Examples below for code snippets).

Note that the client still needs to establish session (only for protocomm_security1) by performing the two way handshake. See *Unified Provisioning* for more details about the secure handshake logic.

Transport Example (SoftAP + HTTP) with Security 1

For complete example see provisioning/softap_prov

```
/* Endpoint handler to be registered with protocomm.
 * This simply echoes back the received data. */
esp_err_t echo_req_handler (uint32_t session_id,
                            const uint8_t *inbuf, ssize_t inlen,
                            uint8_t **outbuf, ssize_t *outlen,
                            void *priv_data)
{
    /* Session ID may be used for persistence */
    printf("Session ID : %d", session_id);
```

(下页继续)

(续上页)

```
    /* Echo back the received data */
    *outlen = inlen;            /* Output data length updated */
    *outbuf = malloc(inlen);    /* This will be deallocated outside */
    memcpy(*outbuf, inbuf, inlen);

    /* Private data that was passed at the time of endpoint creation */
    uint32_t *priv = (uint32_t *) priv_data;
    if (priv) {
        printf("Private data : %d", *priv);
    }

    return ESP_OK;
}

/* Example function for launching a protocomm instance over HTTP */
protocomm_t *start_pc(const char *pop_string)
{
    protocomm_t *pc = protocomm_new();


    /* Config for protocomm_httpd_start() */
    protocomm_httpd_config_t pc_config = {
        .data = {
        .config = PROTOCOMM_HTTPD_DEFAULT_CONFIG()
        }
    };

    /* Start protocomm server on top of HTTP */
    protocomm_httpd_start(pc, &pc_config);

    /* Create Proof of Possession object from pop_string. It must be valid
     * throughout the scope of protocomm endpoint. This need not be static,
     * ie. could be dynamically allocated and freed at the time of endpoint
     * removal */
    const static protocomm_security_pop_t pop_obj = {
        .data = (const uint8_t *) strdup(pop_string),
        .len = strlen(pop_string)
    };

    /* Set security for communication at application level. Just like for
```

(下页继续)

(续上页)

```
     * request handlers, setting security creates an endpoint and registers
     * the handler provided by protocomm_security1. One can similarly use
     * protocomm_security0. Only one type of security can be set for a
     * protocomm instance at a time. */
    protocomm_set_security(pc, "security_endpoint", &protocomm_security1, &pop_
↪obj);

    /* Private data passed to the endpoint must be valid throughout the scope
     * of protocomm endpoint. This need not be static, ie. could be dynamically
     * allocated and freed at the time of endpoint removal */
    static uint32_t priv_data = 1234;

    /* Add a new endpoint for the protocomm instance, identified by a unique␣
↪name
     * and register a handler function along with private data to be passed at␣
↪the
     * time of handler execution. Multiple endpoints can be added as long as␣
↪they
     * are identified by unique names */
    protocomm_add_endpoint(pc, "echo_req_endpoint",
                           echo_req_handler, (void *) &priv_data);
    return pc;
}

/* Example function for stopping a protocomm instance */
void stop_pc(protocomm_t *pc)
{
    /* Remove endpoint identified by it's unique name */
    protocomm_remove_endpoint(pc, "echo_req_endpoint");

    /* Remove security endpoint identified by it's name */
    protocomm_unset_security(pc, "security_endpoint");

    /* Stop HTTP server */
    protocomm_httpd_stop(pc);

    /* Delete (deallocate) the protocomm instance */
    protocomm_delete(pc);
}
```

Transport Example (BLE) with Security 0

For complete example see provisioning/ble_prov

```
/* Example function for launching a secure protocomm instance over BLE */
protocomm_t *start_pc()
{
    protocomm_t *pc = protocomm_new();

    /* Endpoint UUIDs */
    protocomm_ble_name_uuid_t nu_lookup_table[] = {
        {"security_endpoint", 0xFF51},
        {"echo_req_endpoint", 0xFF52}
    };

    /* Config for protocomm_ble_start() */
    protocomm_ble_config_t config = {
        .service_uuid = {
            /* LSB <---------------------------------------
            * ---------------------------------------> MSB */
            0xfb, 0x34, 0x9b, 0x5f, 0x80, 0x00, 0x00, 0x80,
            0x00, 0x10, 0x00, 0x00, 0xFF, 0xFF, 0x00, 0x00,
        },
        .nu_lookup_count = sizeof(nu_lookup_table)/sizeof(nu_lookup_table[0]),
        .nu_lookup = nu_lookup_table
    };

    /* Start protocomm layer on top of BLE */
    protocomm_ble_start(pc, &config);

    /* For protocomm_security0, Proof of Possession is not used, and can be␣
↪kept NULL */
    protocomm_set_security(pc, "security_endpoint", &protocomm_security0,␣
↪NULL);
    protocomm_add_endpoint(pc, "echo_req_endpoint", echo_req_handler, NULL);
    return pc;
}

/* Example function for stopping a protocomm instance */
void stop_pc(protocomm_t *pc)
{
```

(下页继续)

(续上页)

```
    protocomm_remove_endpoint(pc, "echo_req_endpoint");
    protocomm_unset_security(pc, "security_endpoint");

    /* Stop BLE protocomm service */
    protocomm_ble_stop(pc);

    protocomm_delete(pc);
}
```

API Reference

Header File

- protocomm/include/common/protocomm.h

Functions

protocomm_t ***protocomm_new()**

Create a new protocomm instance.

This API will return a new dynamically allocated protocomm instance with all elements of the protocomm_t structure initialized to NULL.

Return

- protocomm_t* : On success
- NULL : No memory for allocating new instance

void **protocomm_delete**(*protocomm_t* **pc*)

Delete a protocomm instance.

This API will deallocate a protocomm instance that was created using `protocomm_new()`.

Parameters

- `pc`: Pointer to the protocomm instance to be deleted

esp_err_t **protocomm_add_endpoint**(*protocomm_t* **pc*, **const** char **ep_name*, *protocomm_req_handler_t h*, void **priv_data*)

Add endpoint request handler for a protocomm instance.

This API will bind an endpoint handler function to the specified endpoint name, along with any private data that needs to be pass to the handler at the time of call.

Note

- An endpoint must be bound to a valid protocomm instance, created using `protocomm_new()`.
- This function internally calls the registered `add_endpoint()` function of the selected transport which is a member of the protocomm_t instance structure.

Return

- ESP_OK : Success
- ESP_FAIL : Error adding endpoint / Endpoint with this name already exists
- ESP_ERR_NO_MEM : Error allocating endpoint resource
- ESP_ERR_INVALID_ARG : Null instance/name/handler arguments

Parameters

- `pc`: Pointer to the protocomm instance
- `ep_name`: Endpoint identifier(name) string
- `h`: Endpoint handler function
- `priv_data`: Pointer to private data to be passed as a parameter to the handler function on call. Pass NULL if not needed.

esp_err_t **protocomm_remove_endpoint**(*protocomm_t* **pc*, **const** char **ep_name*)

Remove endpoint request handler for a protocomm instance.

This API will remove a registered endpoint handler identified by an endpoint name.

Note

- This function internally calls the registered `remove_endpoint()` function which is a member of the protocomm_t instance structure.

Return

- ESP_OK : Success
- ESP_ERR_NOT_FOUND : Endpoint with specified name doesn't exist
- ESP_ERR_INVALID_ARG : Null instance/name arguments

Parameters

- `pc`: Pointer to the protocomm instance
- `ep_name`: Endpoint identifier(name) string

esp_err_t **protocomm_req_handle**(*protocomm_t* **pc*, **const** char **ep_name*, uint32_t *session_id*, **const** uint8_t **inbuf*, ssize_t *inlen*, uint8_t ***outbuf*, ssize_t **outlen*)

Calls the registered handler of an endpoint session for processing incoming data and generating the response.

Note

- An endpoint must be bound to a valid protocomm instance, created using `protocomm_new()`.
- Resulting output buffer must be deallocated by the caller.

Return

- ESP_OK : Request handled successfully
- ESP_FAIL : Internal error in execution of registered handler
- ESP_ERR_NO_MEM : Error allocating internal resource
- ESP_ERR_NOT_FOUND : Endpoint with specified name doesn't exist
- ESP_ERR_INVALID_ARG : Null instance/name arguments

Parameters

- `pc`: Pointer to the protocomm instance
- `ep_name`: Endpoint identifier(name) string
- `session_id`: Unique ID for a communication session
- `inbuf`: Input buffer contains input request data which is to be processed by the registered handler
- `inlen`: Length of the input buffer
- `outbuf`: Pointer to internally allocated output buffer, where the resulting response data output from the registered handler is to be stored
- `outlen`: Buffer length of the allocated output buffer

esp_err_t **protocomm_set_security**(*protocomm_t* **pc*, **const** char **ep_name*, **const** *protocomm_security_t* **sec*, **const** *protocomm_security_pop_t* **pop*)

Add endpoint security for a protocomm instance.

This API will bind a security session establisher to the specified endpoint name, along with any proof of possession that may be required for authenticating a session client.

Note

- An endpoint must be bound to a valid protocomm instance, created using `protocomm_new()`.

- The choice of security can be any `protocomm_security_t` instance. Choices `protocomm_security0` and `protocomm_security1` are readily available.

Return

- ESP_OK : Success
- ESP_FAIL : Error adding endpoint / Endpoint with this name already exists
- ESP_ERR_INVALID_STATE : Security endpoint already set
- ESP_ERR_NO_MEM : Error allocating endpoint resource
- ESP_ERR_INVALID_ARG : Null instance/name/handler arguments

Parameters

- `pc`: Pointer to the protocomm instance
- `ep_name`: Endpoint identifier(name) string
- `sec`: Pointer to endpoint security instance
- `pop`: Pointer to proof of possession for authenticating a client

esp_err_t **protocomm_unset_security**(*protocomm_t* **pc*, **const** char **ep_name*)

Remove endpoint security for a protocomm instance.

This API will remove a registered security endpoint identified by an endpoint name.

Return

- ESP_OK : Success
- ESP_ERR_NOT_FOUND : Endpoint with specified name doesn't exist
- ESP_ERR_INVALID_ARG : Null instance/name arguments

Parameters

- `pc`: Pointer to the protocomm instance
- `ep_name`: Endpoint identifier(name) string

esp_err_t **protocomm_set_version**(*protocomm_t* **pc*, **const** char **ep_name*, **const** char **version*)

Set endpoint for version verification.

This API can be used for setting an application specific protocol version which can be verified by clients through the endpoint.

Note

- An endpoint must be bound to a valid protocomm instance, created using `protocomm_new()`.

Return

- ESP_OK : Success
- ESP_FAIL : Error adding endpoint / Endpoint with this name already exists
- ESP_ERR_INVALID_STATE : Version endpoint already set
- ESP_ERR_NO_MEM : Error allocating endpoint resource
- ESP_ERR_INVALID_ARG : Null instance/name/handler arguments

Parameters

- `pc`: Pointer to the protocomm instance
- `ep_name`: Endpoint identifier(name) string
- `version`: Version identifier(name) string

esp_err_t **protocomm_unset_version**(*protocomm_t* **pc*, **const** char **ep_name*)

Remove version verification endpoint from a protocomm instance.

This API will remove a registered version endpoint identified by an endpoint name.

Return

- ESP_OK : Success
- ESP_ERR_NOT_FOUND : Endpoint with specified name doesn't exist
- ESP_ERR_INVALID_ARG : Null instance/name arguments

Parameters

- `pc`: Pointer to the protocomm instance
- `ep_name`: Endpoint identifier(name) string

Type Definitions

typedef *esp_err_t* (***protocomm_req_handler_t**)(uint32_t session_id, **const** uint8_t *inbuf, ssize_t inlen, uint8_t **outbuf, ssize_t *outlen, void *priv_data)

Function prototype for protocomm endpoint handler.

typedef struct protocomm **protocomm_t**

This structure corresponds to a unique instance of protocomm returned when the API `protocomm_new()` is called. The remaining Protocomm APIs require this object as the first parameter.

Note Structure of the protocomm object is kept private

Header File

- protocomm/include/security/protocomm_security.h

Structures

struct protocomm_security_pop

Proof Of Possession for authenticating a secure session.

Public Members

const uint8_t ***data**

Pointer to buffer containing the proof of possession data

uint16_t **len**

Length (in bytes) of the proof of possession data

struct protocomm_security

Protocomm security object structure.

The member functions are used for implementing secure protocomm sessions.

Note This structure should not have any dynamic members to allow re-entrancy

Public Members

int **ver**

Unique version number of security implementation

esp_err_t (***init**)()

Function for initializing/allocating security infrastructure

esp_err_t (***cleanup**)()

Function for deallocating security infrastructure

esp_err_t (***new_transport_session**)(uint32_t session_id)

Starts new secure transport session with specified ID

esp_err_t (***close_transport_session**)(uint32_t session_id)

Closes a secure transport session with specified ID

esp_err_t (***security_req_handler**)(**const** *protocomm_security_pop_t* *pop, uint32_t session_id, **const** uint8_t *inbuf, ssize_t inlen, uint8_t **outbuf, ssize_t *outlen, void *priv_data)

Handler function for authenticating connection request and establishing secure session

esp_err_t (***encrypt**)(uint32_t session_id, **const** uint8_t *inbuf, ssize_t inlen, uint8_t *outbuf, ssize_t *outlen)
Function which implements the encryption algorithm

esp_err_t (***decrypt**)(uint32_t session_id, **const** uint8_t *inbuf, ssize_t inlen, uint8_t *outbuf, ssize_t *outlen)
Function which implements the decryption algorithm

Type Definitions

typedef struct *protocomm_security_pop* **protocomm_security_pop_t**
Proof Of Possession for authenticating a secure session.

typedef struct *protocomm_security* **protocomm_security_t**
Protocomm security object structure.

The member functions are used for implementing secure protocomm sessions.

Note This structure should not have any dynamic members to allow re-entrancy

Header File

- protocomm/include/security/protocomm_security0.h

Header File

- protocomm/include/security/protocomm_security1.h

Header File

- protocomm/include/transports/protocomm_httpd.h

Functions

esp_err_t **protocomm_httpd_start**(*protocomm_t* **pc*, **const** *protocomm_httpd_config_t* **config*)
Start HTTPD protocomm transport.

This API internally creates a framework to allow endpoint registration and security configuration for the protocomm.

Note This is a singleton. ie. Protocomm can have multiple instances, but only one instance can be bound to an HTTP transport layer.

Return

- ESP_OK : Success
- ESP_ERR_INVALID_ARG : Null arguments
- ESP_ERR_NOT_SUPPORTED : Transport layer bound to another protocomm instance
- ESP_ERR_INVALID_STATE : Transport layer already bound to this protocomm instance
- ESP_ERR_NO_MEM : Memory allocation for server resource failed
- ESP_ERR_HTTPD_* : HTTP server error on start

Parameters

- `pc`: Protocomm instance pointer obtained from protocomm_new()
- `config`: Pointer to config structure for initializing HTTP server

esp_err_t **protocomm_httpd_stop**(*protocomm_t* **pc*)

Stop HTTPD protocomm transport.

This API cleans up the HTTPD transport protocomm and frees all the handlers registered with the protocomm.

Return

- ESP_OK : Success
- ESP_ERR_INVALID_ARG : Null / incorrect protocomm instance pointer

Parameters

- `pc`: Same protocomm instance that was passed to protocomm_httpd_start()

Unions

union protocomm_httpd_config_data_t

#include <protocomm_httpd.h> Protocomm HTTPD Configuration Data

Public Members

void ***handle**

HTTP Server Handle, if ext_handle_provided is set to true

protocomm_http_server_config_t **config**

HTTP Server Configuration, if a server is not already active

Structures

struct protocomm_http_server_config_t

Config parameters for protocomm HTTP server.

Public Members

uint16_t **port**

Port on which the HTTP server will listen

size_t **stack_size**

Stack size of server task, adjusted depending upon stack usage of endpoint handler

unsigned **task_priority**

Priority of server task

struct protocomm_httpd_config_t

Config parameters for protocomm HTTP server.

Public Members

bool **ext_handle_provided**

Flag to indicate of an external HTTP Server Handle has been provided. In such as case, protocomm will use the same HTTP Server and not start a new one internally.

protocomm_httpd_config_data_t **data**

Protocomm HTTPD Configuration Data

Macros

PROTOCOMM_HTTPD_DEFAULT_CONFIG()

Header File

- protocomm/include/transports/protocomm_ble.h

Functions

esp_err_t **protocomm_ble_start**(*protocomm_t* *pc, **const** *protocomm_ble_config_t* *config)

Start Bluetooth Low Energy based transport layer for provisioning.

Initialize and start required BLE service for provisioning. This includes the initialization for characteristics/service for BLE.

Return

- ESP_OK : Success
- ESP_FAIL : Simple BLE start error
- ESP_ERR_NO_MEM : Error allocating memory for internal resources
- ESP_ERR_INVALID_STATE : Error in ble config
- ESP_ERR_INVALID_ARG : Null arguments

Parameters

- `pc`: Protocomm instance pointer obtained from protocomm_new()
- `config`: Pointer to config structure for initializing BLE

esp_err_t **protocomm_ble_stop**(*protocomm_t* **pc*)

Stop Bluetooth Low Energy based transport layer for provisioning.

Stops service/task responsible for BLE based interactions for provisioning

Note You might want to optionally reclaim memory from Bluetooth. Refer to the documentation of `esp_bt_mem_release` in that case.

Return

- ESP_OK : Success
- ESP_FAIL : Simple BLE stop error
- ESP_ERR_INVALID_ARG : Null / incorrect protocomm instance

Parameters

- `pc`: Same protocomm instance that was passed to protocomm_ble_start()

Structures

struct name_uuid

This structure maps handler required by protocomm layer to UUIDs which are used to uniquely identify BLE characteristics from a smartphone or a similar client device.

Public Members

const char ***name**

Name of the handler, which is passed to protocomm layer

uint16_t **uuid**

UUID to be assigned to the BLE characteristic which is mapped to the handler

struct protocomm_ble_config_t

Config parameters for protocomm BLE service.

Public Members

char **device_name**[**MAX_BLE_DEVNAME_LEN**]

BLE device name being broadcast at the time of provisioning

uint8_t **service_uuid**[**ESP_UUID_LEN_128**]

128 bit UUID of the provisioning service

ssize_t **nu_lookup_count**

Number of entries in the Name-UUID lookup table

protocomm_ble_name_uuid_t ***nu_lookup**

Pointer to the Name-UUID lookup table

Macros

MAX_BLE_DEVNAME_LEN

BLE device name cannot be larger than this value 31 bytes (max scan response size) - 1 byte (length) - 1 byte (type) = 29 bytes

Type Definitions

typedef struct *name_uuid* **protocomm_ble_name_uuid_t**

This structure maps handler required by protocomm layer to UUIDs which are used to uniquely identify BLE characteristics from a smartphone or a similar client device.

3.5.3 Wi-Fi Provisioning

Overview

This component provides APIs that control Wi-Fi provisioning service for receiving and configuring Wi-Fi credentials over SoftAP or BLE transport via secure *Protocol Communication (protocomm)* sessions. The set of `wifi_prov_mgr_` APIs help in quickly implementing a provisioning service having necessary features with minimal amount of code and sufficient flexibility.

Initialization

`wifi_prov_mgr_init()` is called to configure and initialize the provisioning manager and thus this must be called prior to invoking any other `wifi_prov_mgr_` APIs. Note that the manager relies on other components

of IDF, namely NVS, TCP/IP, Event Loop and Wi-Fi (and optionally mDNS), hence these must be initialized beforehand. The manager can be de-initialized at any moment by making a call to *wifi_prov_mgr_deinit()*.

```
wifi_prov_mgr_config_t config = {
    .scheme = wifi_prov_scheme_ble,
    .scheme_event_handler = WIFI_PROV_SCHEME_BLE_EVENT_HANDLER_FREE_BTDM,
    .app_event_handler = {
        .event_cb = prov_event_handler,
        .user_data = NULL
    }
};

ESP_ERR_CHECK( wifi_prov_mgr_init(config) );
```

The configuration structure `wifi_prov_mgr_config_t` has a few fields to specify the behavior desired of the manager :

- *scheme* : This is used to specify the provisioning scheme. Each scheme corresponds to one of the modes of transport supported by protocomm. Hence, we have three options :
  - `wifi_prov_scheme_ble` : BLE transport and GATT Server for handling provisioning commands
  - `wifi_prov_scheme_softap` : Wi-Fi SoftAP transport and HTTP Server for handling provisioning commands
  - `wifi_prov_scheme_console` : Serial transport and console for handling provisioning commands
- *scheme_event_handler* : An event handler defined along with scheme. Choosing appropriate scheme specific event handler allows the manager to take care of certain matters automatically. Presently this is not used for either SoftAP or Console based provisioning, but is very convenient for BLE. To understand how, we must recall that Bluetooth requires quite some amount of memory to function and once provisioning is finished, the main application may want to reclaim back this memory (or part of it, if it needs to use either BLE or classic BT). Also, upon every future reboot of a provisioned device, this reclamation of memory needs to be performed again. To reduce this complication in using `wifi_prov_scheme_ble`, the scheme specific handlers have been defined, and depending upon the chosen handler, the BLE / classic BT / BTDM memory will be freed automatically when the provisioning manager is de-initialized. The available options are:
  - `WIFI_PROV_SCHEME_BLE_EVENT_HANDLER_FREE_BTDM` - Free both classic BT and BLE (BTDM) memory. Used when main application doesn' t require Bluetooth at all.
  - `WIFI_PROV_SCHEME_BLE_EVENT_HANDLER_FREE_BLE` - Free only BLE memory. Used when main application requires classic BT.

  - `WIFI_PROV_SCHEME_BLE_EVENT_HANDLER_FREE_BT` - Free only classic BT. Used when main application requires BLE. In this case freeing happens right when the manager is initialized.
  - `WIFI_PROV_EVENT_HANDLER_NONE` - Don' t use any scheme specific handler. Used when provisioning scheme is not BLE (i.e. SoftAP or Console), or when main application wants to handle the memory reclaiming on its own, or needs both BLE and classic BT to function.

- *app_event_handler* : Application specific event handler which can be used to execute specific calls depending on the state of the provisioning service. This is to be set to a function of the form `void app_event_handler(void *user_data, wifi_prov_cb_event_t event, void *event_data)` along with any user data to be made available at the time of handling. This can also be set to `WIFI_PROV_EVENT_HANDLER_NONE` if not used. See definition of `wifi_prov_cb_event_t` for the list of events that are generated by the provisioning service. Following is a snippet showing a typical application specific provisioning event handler along with usage of the `event_data` parameter :

```
void prov_event_handler(void *user_data,
                        wifi_prov_cb_event_t event,
                        void *event_data)
{
    switch (event) {
        case WIFI_PROV_INIT:
            ESP_LOGI(TAG, "Manager initialized");
            break;
        case WIFI_PROV_START:
            ESP_LOGI(TAG, "Provisioning started");
            break;
        case WIFI_PROV_CRED_RECV: {
            wifi_sta_config_t *wifi_sta_cfg = (wifi_sta_config_t *)event_data;
            ESP_LOGI(TAG, "Received Wi-Fi credentials"
                    "\n\tSSID     : %s\n\tPassword : %s",
                    (const char *) wifi_sta_cfg->ssid,
                    (const char *) wifi_sta_cfg->password);
            break;
        }
        case WIFI_PROV_CRED_FAIL: {
            wifi_prov_sta_fail_reason_t *reason = (wifi_prov_sta_fail_reason_t␣
↪*)event_data;
            ESP_LOGE(TAG, "Provisioning failed : %s",
                    (*reason == WIFI_PROV_STA_AUTH_ERROR) ?
```

(下页继续)

(续上页)

```
                    "Wi-Fi AP password incorrect" :
                    "Wi-Fi AP not found");
            break;
        }
        case WIFI_PROV_CRED_SUCCESS:
            ESP_LOGI(TAG, "Provisioning successful");
            break;
        case WIFI_PROV_END:
            ESP_LOGI(TAG, "Provisioning stopped");
            break;
        case WIFI_PROV_DEINIT:
            ESP_LOGI(TAG, "Manager de-initialized");
            break;
        default:
            break;
    }
}
```

Check Provisioning State

Whether device is provisioned or not can be checked at runtime by calling *wifi_prov_mgr_is_provisioned()*. This internally checks if the Wi-Fi credentials are stored in NVS.

Note that presently manager does not have its own NVS namespace for storage of Wi-Fi credentials, instead it relies on the `esp_wifi_` APIs to set and get the credentials stored in NVS from the default location.

If provisioning state needs to be reset, any of the following approaches may be taken :

- the associated part of NVS partition has to be erased manually
- main application must implement some logic to call `esp_wifi_` APIs for erasing the credentials at runtime
- main application must implement some logic to force start the provisioning irrespective of the provisioning state

```
bool provisioned = false;
ESP_ERR_CHECK( wifi_prov_mgr_is_provisioned(&provisioned) );
```

Event Loop Handling

Presently Wi-Fi provisioning manager cannot directly catch external system events, hence it is necessary to explicitly call *wifi_prov_mgr_event_handler()* from inside the global event loop handler. See the following snippet :

```
static esp_err_t global_event_loop_handler(void *ctx, system_event_t *event)
{
    /* Pass event information to provisioning manager so that it can
     * maintain its internal state depending upon the system event */
    wifi_prov_mgr_event_handler(ctx, event);

    /* Event handling logic for main application */
    switch (event->event_id) {
        .....
        .....
        .....
    }
    return ESP_OK;
}
```

Start Provisioning Service

At the time of starting provisioning we need to specify a service name and the corresponding key. These translate to :

- Wi-Fi SoftAP SSID and passphrase, respectively, when scheme is `wifi_prov_scheme_softap`
- BLE Device name (service key is ignored) when scheme is `wifi_prov_scheme_ble`

Also, since internally the manager uses *protocomm*, we have the option of choosing one of the security features provided by it :

- Security 1 is secure communication which consists of a prior handshake involving X25519 key exchange along with authentication using a proof of possession (*pop*), followed by AES-CTR for encryption/decryption of subsequent messages
- Security 0 is simply plain text communication. In this case the *pop* is simply ignored

See *Provisioning* for details about the security features.

```
const char *service_name = "my_device";
const char *service_key  = "password";

```

(下页继续)

(续上页)

```
wifi_prov_security_t security = WIFI_PROV_SECURITY_1;
const char *pop = "abcd1234";

ESP_ERR_CHECK( wifi_prov_mgr_start_provisioning(security, pop, service_name,␣
↪service_key) );
```

The provisioning service will automatically finish only if it receives valid Wi-Fi AP credentials followed by successfully connection of device to the AP (IP obtained). Regardless of that, the provisioning service can be stopped at any moment by making a call to *wifi_prov_mgr_stop_provisioning()*.

注解: If the device fails to connect with the provided credentials, it won't accept new credentials anymore, but the provisioning service will keep on running (only to convey failure to the client), until the device is restarted. Upon restart the provisioning state will turn out to be true this time (as credentials will be found in NVS), but device will again fail to connect with those same credentials (unless an AP with the matching credentials somehow does become available). This situation can be fixed by resetting the credentials in NVS or force starting the provisioning service. This has been explained above in *Check Provisioning State*.

Waiting For Completion

Typically, the main application will wait for the provisioning to finish, then de-initialize the manager to free up resources and finally start executing its own logic.

There are two ways for making this possible. The simpler way is to use a blocking call to *wifi_prov_mgr_wait()*.

```
// Start provisioning service
ESP_ERR_CHECK( wifi_prov_mgr_start_provisioning(security, pop, service_name,␣
↪service_key) );

// Wait for service to complete
wifi_prov_mgr_wait();

// Finally de-initialize the manager
wifi_prov_mgr_deinit();
```

The other way is to use the application specific event handler which is to be configured during initialization, as explained above in *Initialization*.

```
void prov_event_handler(void *user_data, wifi_prov_cb_event_t event, void␣
↪*event_data)
```

(下页继续)

(续上页)

```
{
    switch (event) {
        case WIFI_PROV_END:
            // De-initialize manager once provisioning is finished
            wifi_prov_mgr_deinit();
            break;
        default:
            break;
    }
}
```

User Side Implementation

When the service is started, the device to be provisioned is identified by the advertised service name which, depending upon the selected transport, is either the BLE device name or the SoftAP SSID.

When using SoftAP transport, for allowing service discovery, mDNS must be initialized before starting provisioning. In this case the hostname set by the main application is used, and the service type is internally set to *_esp_wifi_prov*.

When using BLE transport, a custom 128 bit UUID should be set using *wifi_prov_scheme_ble_set_service_uuid()*. This UUID will be included in the BLE advertisement and will correspond to the primary GATT service that provides provisioning endpoints as GATT characteristics. Each GATT characteristic will be formed using the primary service UUID as base, with different auto assigned 12th and 13th bytes (assume counting starts from 0th byte). Since, an endpoint characteristic UUID is auto assigned, it shouldn' t be used to identify the endpoint. Instead, client side applications should identify the endpoints by reading the User Characteristic Description (0x2901) descriptor for each characteristic, which contains the endpoint name of the characteristic. For example, if the service UUID is set to *55cc035e-fb27-4f80-be02-3c60828b7451*, each endpoint characteristic will be assigned a UUID like *55cc_____-fb27-4f80-be02-3c60828b7451*, with unique values at the 12th and 13th bytes.

Once connected to the device, the provisioning related protocomm endpoints can be identified as follows :

表 1: Endpoints provided by Provisioning Service

Endpoint Name (BLE + GATT Server)	URI (SoftAP + HTTP Server + mDNS)	Description
prov-session	http://<mdns-hostname>.local/prov-session	Security endpoint used for session establishment
prov-scan	http://wifi-prov.local/prov-scan	Endpoint used for starting Wi-Fi scan and receiving scan results
prov-config	http://<mdns-hostname>.local/prov-config	Endpoint used for configuring Wi-Fi credentials on device
proto-ver	http://<mdns-hostname>.local/proto-ver	Endpoint for retrieving version info

Immediately after connecting, the client application may fetch the version / capabilities information from the *proto-ver* endpoint. All communications to this endpoint are un-encrypted, hence necessary information (that may be relevant for deciding compatibility) can be retrieved before establishing a secure session. The response is in JSON format and looks like : `prov: { ver: v1.1, cap: [no_pop] }, my_app: { ver: 1.345, cap: [cloud, local_ctrl] },.....` Here label *prov* provides provisioning service version (*ver*) and capabilities (*cap*). For now, only *no_pop* capability is supported, which indicates that the service doesn' t require proof of possession for authentication. Any application related version / capabilities will be given by other labels (like *my_app* in this example). These additional fields are set using *wifi_prov_mgr_set_app_info()*.

User side applications need to implement the signature handshaking required for establishing and authenticating secure protocomm sessions as per the security scheme configured for use (this is not needed when manager is configured to use protocomm security 0).

See Unified Provisioning for more details about the secure handshake and encryption used. Applications must use the *.proto* files found under components/protocomm/proto, which define the Protobuf message structures supported by *prov-session* endpoint.

Once a session is established, Wi-Fi credentials are configured using the following set of *wifi_config* commands, serialized as Protobuf messages (the corresponding *.proto* files can be found under components/wifi_provisioning/proto) :

- *get_status* - For querying the Wi-Fi connection status. The device will respond with a status which will be one of connecting / connected / disconnected. If status is disconnected, a disconnection reason will also be included in the status response.
- *set_config* - For setting the Wi-Fi connection credentials

- *apply_config* - For applying the credentials saved during *set_config* and start the Wi-Fi station

After session establishment, client can also request Wi-Fi scan results from the device. The results returned is a list of AP SSIDs, sorted in descending order of signal strength. This allows client applications to display APs nearby to the device at the time of provisioning, and users can select one of the SSIDs and provide the password which is then sent using the *wifi_config* commands described above. The *wifi_scan* endpoint supports the following protobuf commands :

- *scan_start* - For starting Wi-Fi scan with various options :
  - *blocking* (input) - If true, the command returns only when the scanning is finished
  - *passive* (input) - If true scan is started in passive mode (this may be slower) instead of active mode
  - *group_channels* (input) - This specifies whether to scan all channels in one go (when zero) or perform scanning of channels in groups, with 120ms delay between scanning of consecutive groups, and the value of this parameter sets the number of channels in each group. This is useful when transport mode is SoftAP, where scanning all channels in one go may not give the Wi-Fi driver enough time to send out beacons, and hence may cause disconnection with any connected stations. When scanning in groups, the manager will wait for atleast 120ms after completing scan on a group of channels, and thus allow the driver to send out the beacons. For example, given that the total number of Wi-Fi channels is 14, then setting group_channels to 4, will create 5 groups, with each group having 3 channels, except the last one which will have $14 \% 3 = 2$ channels. So, when scan is started, the first 3 channels will be scanned, followed by a 120ms delay, and then the next 3 channels, and so on, until all the 14 channels have been scanned. One may need to adjust this parameter as having only few channels in a group may slow down the overall scan time, while having too many may again cause disconnection. Usually a value of 4 should work for most cases. Note that for any other mode of transport, e.g. BLE, this can be safely set to 0, and hence achieve the fastest overall scanning time.
  - *period_ms* (input) - Scan parameter specifying how long to wait on each channel
- *scan_status* - Gives the status of scanning process :
  - *scan_finished* (output) - When scan has finished this returns true
  - *result_count* (output) - This gives the total number of results obtained till now. If scan is yet happening this number will keep on updating
- *scan_result* - For fetching scan results. This can be called even if scan is still on going
  - *start_index* (input) - Starting index from where to fetch the entries from the results list
  - *count* (input) - Number of entries to fetch from the starting index
  - *entries* (output) - List of entries returned. Each entry consists of *ssid*, *channel* and *rssi* information

Additional Endpoints

In case users want to have some additional protocomm endpoints customized to their requirements, this is done in two steps. First is creation of an endpoint with a specific name, and the second step is the registration of a handler for this endpoint. See *protocomm* for the function signature of an endpoint handler. A custom endpoint must be created after initialization and before starting the provisioning service. Whereas, the protocomm handler is registered for this endpoint only after starting the provisioning service.

```
wifi_prov_mgr_init(config);
wifi_prov_mgr_endpoint_create("custom-endpoint");
wifi_prov_mgr_start_provisioning(security, pop, service_name, service_key);
wifi_prov_mgr_endpoint_register("custom-endpoint", custom_ep_handler, custom_
↪ep_data);
```

When the provisioning service stops, the endpoint is unregistered automatically.

One can also choose to call *wifi_prov_mgr_endpoint_unregister()* to manually deactivate an endpoint at runtime. This can also be used to deactivate the internal endpoints used by the provisioning service.

When / How To Stop Provisioning Service?

The default behavior is that once the device successfully connects using the Wi-Fi credentials set by the *apply_config* command, the provisioning service will be stopped (and BLE / SoftAP turned off) automatically after responding to the next *get_status* command. If *get_status* command is not received by the device, the service will be stopped after a 30s timeout.

On the other hand, if device was not able to connect using the provided Wi-Fi credentials, due to incorrect SSID / passphrase, the service will keep running, and *get_status* will keep responding with disconnected status and reason for disconnection. Any further attempts to provide another set of Wi-Fi credentials, will be rejected. These credentials will be preserved, unless the provisioning service is force started, or NVS erased.

If this default behavior is not desired, it can be disabled by calling *wifi_prov_mgr_disable_auto_stop()*. Now the provisioning service will only be stopped after an explicit call to *wifi_prov_mgr_stop_provisioning()*, which returns immediately after scheduling a task for stopping the service. The service stops after a certain delay and WIFI_PROV_END event gets emitted. This delay is specified by the argument to *wifi_prov_mgr_disable_auto_stop()*.

The customized behavior is useful for applications which want the provisioning service to be stopped some time after the Wi-Fi connection is successfully established. For example, if the application requires the device to connect to some cloud service and obtain another set of credentials, and exchange this credentials over a custom protocomm endpoint, then after successfully doing so stop the provisioning service by calling *wifi_prov_mgr_stop_provisioning()* inside the protocomm handler itself. The right amount of delay

ensures that the transport resources are freed only after the response from the protocomm handler reaches the client side application.

Application Examples

For complete example implementation see provisioning/manager

API Reference

Header File

- wifi_provisioning/include/wifi_provisioning/manager.h

Functions

esp_err_t **wifi_prov_mgr_init**(*wifi_prov_mgr_config_t config*)

Initialize provisioning manager instance.

Configures the manager and allocates internal resources

Configuration specifies the provisioning scheme (transport) and event handlers

Event WIFI_PROV_INIT is emitted right after initialization is complete

Return

- ESP_OK : Success
- ESP_FAIL : Fail

Parameters

- `config`: Configuration structure

void **wifi_prov_mgr_deinit**(void)

Stop provisioning (if running) and release resource used by the manager.

Event WIFI_PROV_DEINIT is emitted right after de-initialization is finished

If provisioning service is still active when this API is called, it first stops the service, hence emitting WIFI_PROV_END, and then performs the de-initialization

esp_err_t **wifi_prov_mgr_is_provisioned**(bool **provisioned*)

Checks if device is provisioned.

This checks if Wi-Fi credentials are present on the NVS

The Wi-Fi credentials are assumed to be kept in the same NVS namespace as used by esp_wifi component

If one were to call esp_wifi_set_config() directly instead of going through the provisioning process, this function will still yield true (i.e. device will be found to be provisioned)

Note Calling wifi_prov_mgr_start_provisioning() automatically resets the provision state, irrespective of what the state was prior to making the call.

Return

- ESP_OK : Retrieved provision state successfully
- ESP_FAIL : Wi-Fi not initialized
- ESP_ERR_INVALID_ARG : Null argument supplied
- ESP_ERR_INVALID_STATE : Manager not initialized

Parameters

- `provisioned`: True if provisioned, else false

esp_err_t **wifi_prov_mgr_start_provisioning**(*wifi_prov_security_t security*, **const** char **pop*, **const** char **service_name*, **const** char **service_key*)

Start provisioning service.

This starts the provisioning service according to the scheme configured at the time of initialization. For scheme :

- wifi_prov_scheme_ble : This starts protocomm_ble, which internally initializes BLE transport and starts GATT server for handling provisioning requests
- wifi_prov_scheme_softap : This activates SoftAP mode of Wi-Fi and starts protocomm_httpd, which internally starts an HTTP server for handling provisioning requests (If mDNS is active it also starts advertising service with type _esp_wifi_prov._tcp)

Event WIFI_PROV_START is emitted right after provisioning starts without failure

Note This API will start provisioning service even if device is found to be already provisioned, i.e. wifi_prov_mgr_is_provisioned() yields true

Return

- ESP_OK : Provisioning started successfully
- ESP_FAIL : Failed to start provisioning service
- ESP_ERR_INVALID_STATE : Provisioning manager not initialized or already started

Parameters

- `security`: Specify which protocomm security scheme to use :
  - WIFI_PROV_SECURITY_0 : For no security

  - WIFI_PROV_SECURITY_1 : x25519 secure handshake for session establishment followed by AES-CTR encryption of provisioning messages

- `pop`: Pointer to proof of possession string (NULL if not needed). This is relevant only for protocomm security 1, in which case it is used for authenticating secure session
- `service_name`: Unique name of the service. This translates to:
  - Wi-Fi SSID when provisioning mode is softAP
  - Device name when provisioning mode is BLE
- `service_key`: Key required by client to access the service (NULL if not needed). This translates to:
  - Wi-Fi password when provisioning mode is softAP
  - ignored when provisioning mode is BLE

void **wifi_prov_mgr_stop_provisioning**(void)

Stop provisioning service.

If provisioning service is active, this API will initiate a process to stop the service and return. Once the service actually stops, the event WIFI_PROV_END will be emitted.

If wifi_prov_mgr_deinit() is called without calling this API first, it will automatically stop the provisioning service and emit the WIFI_PROV_END, followed by WIFI_PROV_DEINIT, before returning.

This API will generally be used along with wifi_prov_mgr_disable_auto_stop() in the scenario when the main application has registered its own endpoints, and wishes that the provisioning service is stopped only when some protocomm command from the client side application is received.

Calling this API inside an endpoint handler, with sufficient cleanup_delay, will allow the response / acknowledgment to be sent successfully before the underlying protocomm service is stopped.

Cleaup_delay is set when calling wifi_prov_mgr_disable_auto_stop(). If not specified, it defaults to 1000ms.

For straightforward cases, using this API is usually not necessary as provisioning is stopped automatically once WIFI_PROV_CRED_SUCCESS is emitted. Stopping is delayed (maximum 30 seconds) thus allowing the client side application to query for Wi-Fi state, i.e. after receiving the first query and sending `Wi-Fi state connected` response the service is stopped immediately.

void **wifi_prov_mgr_wait**(void)

Wait for provisioning service to finish.

Calling this API will block until provisioning service is stopped i.e. till event WIFI_PROV_END is emitted.

This will not block if provisioning is not started or not initialized.

esp_err_t **wifi_prov_mgr_disable_auto_stop**(uint32_t *cleanup_delay*)

Disable auto stopping of provisioning service upon completion.

By default, once provisioning is complete, the provisioning service is automatically stopped, and all endpoints (along with those registered by main application) are deactivated.

This API is useful in the case when main application wishes to close provisioning service only after it receives some protocomm command from the client side app. For example, after connecting to Wi-Fi, the device may want to connect to the cloud, and only once that is successfully, the device is said to be fully configured. But, then it is upto the main application to explicitly call wifi_prov_mgr_stop_provisioning() later when the device is fully configured and the provisioning service is no longer required.

Note This must be called before executing wifi_prov_mgr_start_provisioning()

Return

- ESP_OK : Success
- ESP_ERR_INVALID_STATE : Manager not initialized or provisioning service already started

Parameters

- `cleanup_delay`: Sets the delay after which the actual cleanup of transport related resources is done after a call to wifi_prov_mgr_stop_provisioning() returns. Minimum allowed value is 100ms. If not specified, this will default to 1000ms.

esp_err_t **wifi_prov_mgr_set_app_info**(**const** char **label*, **const** char **version*, **const** char ***capabilities*, size_t *total_capabilities*)

Set application version and capabilities in the JSON data returned by proto-ver endpoint.

This function can be called multiple times, to specify information about the various application specific services running on the device, identified by unique labels.

The provisioning service itself registers an entry in the JSON data, by the label "prov", containing only provisioning service version and capabilities. Application services should use a label other than "prov" so as not to overwrite this.

Note This must be called before executing wifi_prov_mgr_start_provisioning()

Return

- ESP_OK : Success
- ESP_ERR_INVALID_STATE : Manager not initialized or provisioning service already started
- ESP_ERR_NO_MEM : Failed to allocate memory for version string
- ESP_ERR_INVALID_ARG : Null argument

Parameters

- `label`: String indicating the application name.
- `version`: String indicating the application version. There is no constraint on format.
- `capabilities`: Array of strings with capabilities. These could be used by the client side app to know the application registered endpoint capabilities
- `total_capabilities`: Size of capabilities array

esp_err_t **wifi_prov_mgr_endpoint_create(const** char *_ep_name_**)**

Create an additional endpoint and allocate internal resources for it.

This API is to be called by the application if it wants to create an additional endpoint. All additional endpoints will be assigned UUIDs starting from 0xFF54 and so on in the order of execution.

protocomm handler for the created endpoint is to be registered later using wifi_prov_mgr_endpoint_register() after provisioning has started.

Note This API can only be called BEFORE provisioning is started

Note Additional endpoints can be used for configuring client provided parameters other than Wi-Fi credentials, that are necessary for the main application and hence must be set prior to starting the application

Note After session establishment, the additional endpoints must be targeted first by the client side application before sending Wi-Fi configuration, because once Wi-Fi configuration finishes the provisioning service is stopped and hence all endpoints are unregistered

Return

- ESP_OK : Success
- ESP_FAIL : Failure

Parameters

- `ep_name`: unique name of the endpoint

esp_err_t **wifi_prov_mgr_endpoint_register(const** char *_ep_name_, *protocomm_req_handler_t* *_handler_, void *_user_ctx_**)**

Register a handler for the previously created endpoint.

This API can be called by the application to register a protocomm handler to any endpoint that was created using wifi_prov_mgr_endpoint_create().

Note This API can only be called AFTER provisioning has started

Note Additional endpoints can be used for configuring client provided parameters other than Wi-Fi credentials, that are necessary for the main application and hence must be set prior to starting the application

Note After session establishment, the additional endpoints must be targeted first by the client side application before sending Wi-Fi configuration, because once Wi-Fi configuration finishes the provisioning service is stopped and hence all endpoints are unregistered

Return

- ESP_OK : Success
- ESP_FAIL : Failure

Parameters

- `ep_name`: Name of the endpoint
- `handler`: Endpoint handler function
- `user_ctx`: User data

void **wifi_prov_mgr_endpoint_unregister**(**const** char *_ep_name_)

Unregister the handler for an endpoint.

This API can be called if the application wants to selectively unregister the handler of an endpoint while the provisioning is still in progress.

All the endpoint handlers are unregistered automatically when the provisioning stops.

Parameters

- `ep_name`: Name of the endpoint

esp_err_t **wifi_prov_mgr_event_handler**(void *_ctx_, system_event_t *_event_)

Event handler for provisioning manager.

This is called from the main event handler and controls the provisioning manager' s internal state machine depending on incoming Wi-Fi events

Return

- ESP_OK : Event handled successfully
- ESP_ERR_FAIL : This event cannot be handled

Parameters

- `ctx`: Event context data
- `event`: Event info

esp_err_t **wifi_prov_mgr_get_wifi_state**(*wifi_prov_sta_state_t* *_state_)

Get state of Wi-Fi Station during provisioning.

Return

- ESP_OK : Successfully retrieved Wi-Fi state
- ESP_FAIL : Provisioning app not running

Parameters

- `state`: Pointer to wifi_prov_sta_state_t variable to be filled

esp_err_t **wifi_prov_mgr_get_wifi_disconnect_reason**(*wifi_prov_sta_fail_reason_t *reason*)

Get reason code in case of Wi-Fi station disconnection during provisioning.

Return

- ESP_OK : Successfully retrieved Wi-Fi disconnect reason
- ESP_FAIL : Provisioning app not running

Parameters

- `reason`: Pointer to wifi_prov_sta_fail_reason_t variable to be filled

esp_err_t **wifi_prov_mgr_configure_sta**(*wifi_config_t *wifi_cfg*)

Runs Wi-Fi as Station with the supplied configuration.

Configures the Wi-Fi station mode to connect to the AP with SSID and password specified in config structure and sets Wi-Fi to run as station.

This is automatically called by provisioning service upon receiving new credentials.

If credentials are to be supplied to the manager via a different mode other than through protocomm, then this API needs to be called.

Event WIFI_PROV_CRED_RECV is emitted after credentials have been applied and Wi-Fi station started

Return

- ESP_OK : Wi-Fi configured and started successfully
- ESP_FAIL : Failed to set configuration

Parameters

- `wifi_cfg`: Pointer to Wi-Fi configuration structure

Structures

struct wifi_prov_event_handler_t

Event handler that is used by the manager while provisioning service is active.

Public Members

wifi_prov_cb_func_t **event_cb**

Callback function to be executed on provisioning events

void ***user_data**

User context data to pass as parameter to callback function

struct wifi_prov_scheme

Structure for specifying the provisioning scheme to be followed by the manager.

Note Ready to use schemes are available:

- wifi_prov_scheme_ble : for provisioning over BLE transport + GATT server
- wifi_prov_scheme_softap : for provisioning over SoftAP transport + HTTP server
- wifi_prov_scheme_console : for provisioning over Serial UART transport + Console (for debugging)

Public Members

esp_err_t (***prov_start**)(*protocomm_t* *pc, void *config)

Function which is to be called by the manager when it is to start the provisioning service associated with a protocomm instance and a scheme specific configuration

esp_err_t (***prov_stop**)(*protocomm_t* *pc)

Function which is to be called by the manager to stop the provisioning service previously associated with a protocomm instance

void *(***new_config**)(void)

Function which is to be called by the manager to generate a new configuration for the provisioning service, that is to be passed to *prov_start()*

void (***delete_config**)(void *config)

Function which is to be called by the manager to delete a configuration generated using *new_config()*

esp_err_t (***set_config_service**)(void *config, **const** char *service_name, **const** char *service_key)

Function which is to be called by the manager to set the service name and key values in the configuration structure

esp_err_t (***set_config_endpoint**)(void *config, **const** char *endpoint_name, uint16_t uuid)

Function which is to be called by the manager to set a protocomm endpoint with an identifying name and UUID in the configuration structure

wifi_mode_t **wifi_mode**

Sets mode of operation of Wi-Fi during provisioning This is set to :

- WIFI_MODE_APSTA for SoftAP transport
- WIFI_MODE_STA for BLE transport

struct wifi_prov_mgr_config_t

Structure for specifying the manager configuration.

Public Members

wifi_prov_scheme_t **scheme**

Provisioning scheme to use. Following schemes are already available:

- wifi_prov_scheme_ble : for provisioning over BLE transport + GATT server
- wifi_prov_scheme_softap : for provisioning over SoftAP transport + HTTP server + mDNS (optional)
- wifi_prov_scheme_console : for provisioning over Serial UART transport + Console (for debugging)

wifi_prov_event_handler_t **scheme_event_handler**

Event handler required by the scheme for incorporating scheme specific behavior while provisioning manager is running. Various options may be provided by the scheme for setting this field. Use WIFI_PROV_EVENT_HANDLER_NONE when not used. When using scheme wifi_prov_scheme_ble, the following options are available:

- WIFI_PROV_SCHEME_BLE_EVENT_HANDLER_FREE_BTDM
- WIFI_PROV_SCHEME_BLE_EVENT_HANDLER_FREE_BLE
- WIFI_PROV_SCHEME_BLE_EVENT_HANDLER_FREE_BT

wifi_prov_event_handler_t **app_event_handler**

Event handler that can be set for the purpose of incorporating application specific behavior. Use WIFI_PROV_EVENT_HANDLER_NONE when not used.

Macros

WIFI_PROV_EVENT_HANDLER_NONE

Event handler can be set to none if not used.

Type Definitions

typedef void (***wifi_prov_cb_func_t**)(void *user_data, *wifi_prov_cb_event_t* event, void *event_data)

typedef struct *wifi_prov_scheme* **wifi_prov_scheme_t**

Structure for specifying the provisioning scheme to be followed by the manager.

Note Ready to use schemes are available:

- wifi_prov_scheme_ble : for provisioning over BLE transport + GATT server
- wifi_prov_scheme_softap : for provisioning over SoftAP transport + HTTP server
- wifi_prov_scheme_console : for provisioning over Serial UART transport + Console (for debugging)

typedef enum *wifi_prov_security* **wifi_prov_security_t**

Security modes supported by the Provisioning Manager.

These are same as the security modes provided by protocomm

Enumerations

enum wifi_prov_cb_event_t

Events generated by manager.

These events are generated in order of declaration and, for the stretch of time between initialization and de-initialization of the manager, each event is signaled only once

Values:

`WIFI_PROV_INIT`

Emitted when the manager is initialized

`WIFI_PROV_START`

Indicates that provisioning has started

`WIFI_PROV_CRED_RECV`

Emitted when Wi-Fi AP credentials are received via `protocomm` endpoint `wifi_config`. The event data in this case is a pointer to the corresponding *wifi_sta_config_t* structure

`WIFI_PROV_CRED_FAIL`

Emitted when device fails to connect to the AP of which the credentials were received earlier on event `WIFI_PROV_CRED_RECV`. The event data in this case is a pointer to the disconnection reason code with type `wifi_prov_sta_fail_reason_t`

`WIFI_PROV_CRED_SUCCESS`

Emitted when device successfully connects to the AP of which the credentials were received earlier on event `WIFI_PROV_CRED_RECV`

`WIFI_PROV_END`

Signals that provisioning service has stopped

`WIFI_PROV_DEINIT`

Signals that manager has been de-initialized

enum wifi_prov_security

Security modes supported by the Provisioning Manager.

These are same as the security modes provided by protocomm

Values:

WIFI_PROV_SECURITY_0 = 0

No security (plain-text communication)

WIFI_PROV_SECURITY_1

This secure communication mode consists of X25519 key exchange

- proof of possession (pop) based authentication
- AES-CTR encryption

Header File

- wifi_provisioning/include/wifi_provisioning/scheme_ble.h

Functions

void **wifi_prov_scheme_ble_event_cb_free_btdm**(void *user_data, *wifi_prov_cb_event_t* event, void *event_data)

void **wifi_prov_scheme_ble_event_cb_free_ble**(void *user_data, *wifi_prov_cb_event_t* event, void *event_data)

void **wifi_prov_scheme_ble_event_cb_free_bt**(void *user_data, *wifi_prov_cb_event_t* event, void *event_data)

esp_err_t **wifi_prov_scheme_ble_set_service_uuid**(uint8_t *uuid128)

Set the 128 bit GATT service UUID used for provisioning.

This API is used to override the default 128 bit provisioning service UUID, which is 0000ffff-0000-1000-8000-00805f9b34fb.

This must be called before starting provisioning, i.e. before making a call to wifi_prov_mgr_start_provisioning(), otherwise the default UUID will be used.

Note The data being pointed to by the argument must be valid atleast till provisioning is started. Upon start, the manager will store an internal copy of this UUID, and this data can be freed or invalidated afterwords.

Return

- ESP_OK : Success
- ESP_ERR_INVALID_ARG : Null argument

Parameters

- `uuid128`: A custom 128 bit UUID

Macros

`WIFI_PROV_SCHEME_BLE_EVENT_HANDLER_FREE_BTDM`

`WIFI_PROV_SCHEME_BLE_EVENT_HANDLER_FREE_BLE`

`WIFI_PROV_SCHEME_BLE_EVENT_HANDLER_FREE_BT`

Header File

- wifi_provisioning/include/wifi_provisioning/scheme_softap.h

Functions

void **wifi_prov_scheme_softap_set_httpd_handle**(void *_handle_)

Provide HTTPD Server handle externally.

Useful in cases wherein applications need the webserver for some different operations, and do not want the wifi provisioning component to start/stop a new instance.

Note This API should be called before wifi_prov_mgr_start_provisioning()

Parameters

- `handle`: Handle to HTTPD server instance

Header File

- wifi_provisioning/include/wifi_provisioning/scheme_console.h

Header File

- wifi_provisioning/include/wifi_provisioning/wifi_config.h

Functions

esp_err_t **wifi_prov_config_data_handler**(uint32_t *session_id*, **const** uint8_t *_inbuf_, ssize_t *inlen*, uint8_t **_outbuf_, ssize_t *_outlen_, void *_priv_data_)

Handler for receiving and responding to requests from master.

This is to be registered as the `wifi_config` endpoint handler (protocomm `protocomm_req_handler_t`) using `protocomm_add_endpoint()`

Structures

struct wifi_prov_sta_conn_info_t

WiFi STA connected status information.

Public Members

char **ip_addr**[IP4ADDR_STRLEN_MAX]

IP Address received by station

char **bssid**[6]

BSSID of the AP to which connection was estalished

char **ssid**[33]

SSID of the to which connection was estalished

uint8_t **channel**

Channel of the AP

uint8_t **auth_mode**

Authorization mode of the AP

struct wifi_prov_config_get_data_t

WiFi status data to be sent in response to `get_status` request from master.

Public Members

wifi_prov_sta_state_t **wifi_state**

WiFi state of the station

wifi_prov_sta_fail_reason_t **fail_reason**

Reason for disconnection (valid only when `wifi_state` is `WIFI_STATION_DISCONNECTED`)

wifi_prov_sta_conn_info_t **conn_info**

Connection information (valid only when `wifi_state` is `WIFI_STATION_CONNECTED`)

struct wifi_prov_config_set_data_t

WiFi config data received by slave during `set_config` request from master.

Public Members

char **ssid**[33]

SSID of the AP to which the slave is to be connected

char **password**[64]
: Password of the AP

char **bssid**[6]
: BSSID of the AP

uint8_t **channel**
: Channel of the AP

struct wifi_prov_config_handlers

Internal handlers for receiving and responding to protocomm requests from master.

This is to be passed as priv_data for protocomm request handler (refer to `wifi_prov_config_data_handler()`) when calling `protocomm_add_endpoint()`.

Public Members

esp_err_t (***get_status_handler**)(*wifi_prov_config_get_data_t* *resp_data, *wifi_prov_ctx_t* **ctx)
: Handler function called when connection status of the slave (in WiFi station mode) is requested

esp_err_t (***set_config_handler**)(**const** *wifi_prov_config_set_data_t* *req_data, *wifi_prov_ctx_t* **ctx)
: Handler function called when WiFi connection configuration (eg. AP SSID, password, etc.) of the slave (in WiFi station mode) is to be set to user provided values

esp_err_t (***apply_config_handler**)(*wifi_prov_ctx_t* **ctx)
: Handler function for applying the configuration that was set in `set_config_handler`. After applying the station may get connected to the AP or may fail to connect. The slave must be ready to convey the updated connection status information when `get_status_handler` is invoked again by the master.

wifi_prov_ctx_t ***ctx**
: Context pointer to be passed to above handler functions upon invocation

Type Definitions

typedef struct wifi_prov_ctx **wifi_prov_ctx_t**
: Type of context data passed to each get/set/apply handler function set in *`wifi_prov_config_handlers`* structure.

  This is passed as an opaque pointer, thereby allowing it be defined later in application code as per requirements.

typedef struct *wifi_prov_config_handlers* **wifi_prov_config_handlers_t**
: Internal handlers for receiving and responding to protocomm requests from master.

This is to be passed as priv_data for protocomm request handler (refer to `wifi_prov_config_data_handler()`) when calling `protocomm_add_endpoint()`.

Enumerations

enum wifi_prov_sta_state_t

WiFi STA status for conveying back to the provisioning master.

Values:

`WIFI_PROV_STA_CONNECTING`

`WIFI_PROV_STA_CONNECTED`

`WIFI_PROV_STA_DISCONNECTED`

enum wifi_prov_sta_fail_reason_t

WiFi STA connection fail reason.

Values:

`WIFI_PROV_STA_AUTH_ERROR`

`WIFI_PROV_STA_AP_NOT_FOUND`

Example code for this API section is provided in provisioning directory of ESP-IDF examples.

3.6 Storage API

3.6.1 SPI Flash APIs

Overview

The spi_flash component contains APIs related to reading, writing, erasing, memory mapping data in the external SPI flash. It also has higher-level APIs which work with partitions defined in the *partition table*.

Note that all the functionality is limited to the "main" SPI flash chip, the same SPI flash chip from which program runs. For `spi_flash_*` functions, this is a software limitation. The underlying ROM functions which work with SPI flash do not have provisions for working with flash chips attached to SPI peripherals other than SPI0.

SPI flash access APIs

This is the set of APIs for working with data in flash:

- *spi_flash_read()* used to read data from flash to RAM
- *spi_flash_write()* used to write data from RAM to flash

- *spi_flash_erase_sector()* used to erase individual sectors of flash
- *spi_flash_erase_range()* used to erase range of addresses in flash
- *spi_flash_get_chip_size()* returns flash chip size, in bytes, as configured in menuconfig

Generally, try to avoid using the raw SPI flash functions in favour of *partition-specific functions*.

SPI Flash Size

The SPI flash size is configured by writing a field in the software bootloader image header, flashed at offset 0x1000.

By default, the SPI flash size is detected by esptool.py when this bootloader is written to flash, and the header is updated with the correct size. Alternatively, it is possible to generate a fixed flash size by setting `CONFIG_ESPTOOLPY_FLASHSIZE` in `make menuconfig`.

If it is necessary to override the configured flash size at runtime, is is possible to set the `chip_size` member of `g_rom_flashchip` structure. This size is used by `spi_flash_*` functions (in both software & ROM) for bounds checking.

Concurrency Constraints

Because the SPI flash is also used for firmware execution (via the instruction & data caches), these caches must be disabled while reading/writing/erasing. This means that both CPUs must be running code from IRAM and only reading data from DRAM while flash write operations occur.

If you use the APIs documented here, then this happens automatically and transparently. However note that it will have some performance impact on other tasks in the system.

Refer to the *application memory layout* documentation for an explanation of the differences between IRAM, DRAM and flash cache.

To avoid reading flash cache accidentally, when one CPU commences a flash write or erase operation the other CPU is put into a blocked state and all non-IRAM-safe interrupts are disabled on both CPUs, until the flash operation completes.

IRAM-Safe Interrupt Handlers

If you have an interrupt handler that you want to execute even when a flash operation is in progress (for example, for low latency operations), set the `ESP_INTR_FLAG_IRAM` flag when the *interrupt handler is registered*.

You must ensure all data and functions accessed by these interrupt handlers are located in IRAM or DRAM. This includes any functions that the handler calls.

Use the `IRAM_ATTR` attribute for functions:

```
#include "esp_attr.h"

void IRAM_ATTR gpio_isr_handler(void* arg)
{
    // ...
}
```

Use the `DRAM_ATTR` and `DRAM_STR` attributes for constant data:

```
void IRAM_ATTR gpio_isr_handler(void* arg)
{
   const static DRAM_ATTR uint8_t INDEX_DATA[] = { 45, 33, 12, 0 };
   const static char *MSG = DRAM_STR("I am a string stored in RAM");
}
```

Note that knowing which data should be marked with `DRAM_ATTR` can be hard, the compiler will sometimes recognise that a variable or expression is constant (even if it is not marked `const`) and optimise it into flash, unless it is marked with `DRAM_ATTR`.

If a function or symbol is not correctly put into IRAM/DRAM and the interrupt handler reads from the flash cache during a flash operation, it will cause a crash due to Illegal Instruction exception (for code which should be in IRAM) or garbage data to be read (for constant data which should be in DRAM).

Partition table APIs

ESP-IDF projects use a partition table to maintain information about various regions of SPI flash memory (bootloader, various application binaries, data, filesystems). More information about partition tables can be found *here*.

This component provides APIs to enumerate partitions found in the partition table and perform operations on them. These functions are declared in `esp_partition.h`:

- *esp_partition_find()* used to search partition table for entries with specific type, returns an opaque iterator
- *esp_partition_get()* returns a structure describing the partition, for the given iterator
- *esp_partition_next()* advances iterator to the next partition found
- *esp_partition_iterator_release()* releases iterator returned by `esp_partition_find`
- *esp_partition_find_first()* is a convenience function which returns structure describing the first partition found by `esp_partition_find`
- *esp_partition_read()*, *esp_partition_write()*, *esp_partition_erase_range()* are equivalent to *spi_flash_read()*, *spi_flash_write()*, *spi_flash_erase_range()*, but operate within partition

boundaries

注解: Most application code should use these `esp_partition_*` APIs instead of lower level `spi_flash_*` APIs. Partition APIs do bounds checking and calculate correct offsets in flash based on data stored in partition table.

SPI Flash Encryption

It is possible to encrypt SPI flash contents, and have it transparenlty decrypted by hardware.

Refer to the *Flash Encryption documentation* for more details.

Memory mapping APIs

ESP32 features memory hardware which allows regions of flash memory to be mapped into instruction and data address spaces. This mapping works only for read operations, it is not possible to modify contents of flash memory by writing to mapped memory region. Mapping happens in 64KB pages. Memory mapping hardware can map up to 4 megabytes of flash into data address space, and up to 16 megabytes of flash into instruction address space. See the technical reference manual for more details about memory mapping hardware.

Note that some number of 64KB pages is used to map the application itself into memory, so the actual number of available 64KB pages may be less.

Reading data from flash using a memory mapped region is the only way to decrypt contents of flash when *flash encryption* is enabled. Decryption is performed at hardware level.

Memory mapping APIs are declared in `esp_spi_flash.h` and `esp_partition.h`:

- *spi_flash_mmap()* maps a region of physical flash addresses into instruction space or data space of the CPU
- *spi_flash_munmap()* unmaps previously mapped region
- *esp_partition_mmap()* maps part of a partition into the instruction space or data space of the CPU

Differences between *spi_flash_mmap()* and *esp_partition_mmap()* are as follows:

- *spi_flash_mmap()* must be given a 64KB aligned physical address
- *esp_partition_mmap()* may be given any arbitrary offset within the partition, it will adjust returned pointer to mapped memory as necessary

Note that because memory mapping happens in 64KB blocks, it may be possible to read data outside of the partition provided to `esp_partition_mmap`.

See also

- *Partition Table documentation*
- *Over The Air Update (OTA) API* provides high-level API for updating app firmware stored in flash.
- *Non-Volatile Storage (NVS) API* provides a structured API for storing small items of data in SPI flash.

Implementation details

In order to perform some flash operations, we need to make sure both CPUs are not running any code from flash for the duration of the flash operation. In a single-core setup this is easy: we disable interrupts/scheduler and do the flash operation. In the dual-core setup this is slightly more complicated. We need to make sure that the other CPU doesn't run any code from flash.

When SPI flash API is called on CPU A (can be PRO or APP), we start spi_flash_op_block_func function on CPU B using esp_ipc_call API. This API wakes up high priority task on CPU B and tells it to execute given function, in this case spi_flash_op_block_func. This function disables cache on CPU B and signals that cache is disabled by setting s_flash_op_can_start flag. Then the task on CPU A disables cache as well, and proceeds to execute flash operation.

While flash operation is running, interrupts can still run on CPUs A and B. We assume that all interrupt code is placed into RAM. Once interrupt allocation API is added, we should add a flag to request interrupt to be disabled for the duration of flash operations.

Once flash operation is complete, function on CPU A sets another flag, s_flash_op_complete, to let the task on CPU B know that it can re-enable cache and release the CPU. Then the function on CPU A re-enables the cache on CPU A as well and returns control to the calling code.

Additionally, all API functions are protected with a mutex (s_flash_op_mutex).

In a single core environment (*CONFIG_FREERTOS_UNICORE* enabled), we simply disable both caches, no inter-CPU communication takes place.

API Reference - SPI Flash

Header File

- spi_flash/include/esp_spi_flash.h

Functions

void **spi_flash_init()**

Initialize SPI flash access driver.

This function must be called exactly once, before any other spi_flash_* functions are called. Currently this function is called from startup code. There is no need to call it from application code.

size_t **spi_flash_get_chip_size**()

Get flash chip size, as set in binary image header.

Note This value does not necessarily match real flash size.

Return size of flash chip, in bytes

esp_err_t **spi_flash_erase_sector**(size_t *sector*)

Erase the Flash sector.

Return esp_err_t

Parameters

- `sector`: Sector number, the count starts at sector 0, 4KB per sector.

esp_err_t **spi_flash_erase_range**(size_t *start_address*, size_t *size*)

Erase a range of flash sectors.

Return esp_err_t

Parameters

- `start_address`: Address where erase operation has to start. Must be 4kB-aligned
- `size`: Size of erased range, in bytes. Must be divisible by 4kB.

esp_err_t **spi_flash_write**(size_t *dest_addr*, **const** void **src*, size_t *size*)

Write data to Flash.

Note For fastest write performance, write a 4 byte aligned size at a 4 byte aligned offset in flash from a source buffer in DRAM. Varying any of these parameters will still work, but will be slower due to buffering.

Note Writing more than 8KB at a time will be split into multiple write operations to avoid disrupting other tasks in the system.

Return esp_err_t

Parameters

- `dest_addr`: Destination address in Flash.
- `src`: Pointer to the source buffer.
- `size`: Length of data, in bytes.

esp_err_t **spi_flash_write_encrypted**(size_t *dest_addr*, **const** void **src*, size_t *size*)

Write data encrypted to Flash.

Note Flash encryption must be enabled for this function to work.

Note Flash encryption must be enabled when calling this function. If flash encryption is disabled, the function returns ESP_ERR_INVALID_STATE. Use esp_flash_encryption_enabled() function to determine if flash encryption is enabled.

Note Both dest_addr and size must be multiples of 16 bytes. For absolute best performance, both dest_addr and size arguments should be multiples of 32 bytes.

Return esp_err_t

Parameters

- `dest_addr`: Destination address in Flash. Must be a multiple of 16 bytes.
- `src`: Pointer to the source buffer.
- `size`: Length of data, in bytes. Must be a multiple of 16 bytes.

esp_err_t **spi_flash_read**(size_t *src_addr*, void **dest*, size_t *size*)

Read data from Flash.

Note For fastest read performance, all parameters should be 4 byte aligned. If source address and read size are not 4 byte aligned, read may be split into multiple flash operations. If destination buffer is not 4 byte aligned, a temporary buffer will be allocated on the stack.

Note Reading more than 16KB of data at a time will be split into multiple reads to avoid disruption to other tasks in the system. Consider using spi_flash_mmap() to read large amounts of data.

Return esp_err_t

Parameters

- `src_addr`: source address of the data in Flash.
- `dest`: pointer to the destination buffer
- `size`: length of data

esp_err_t **spi_flash_read_encrypted**(size_t *src*, void **dest*, size_t *size*)

Read data from Encrypted Flash.

If flash encryption is enabled, this function will transparently decrypt data as it is read. If flash encryption is not enabled, this function behaves the same as spi_flash_read().

See esp_flash_encryption_enabled() for a function to check if flash encryption is enabled.

Return esp_err_t

Parameters

- `src`: source address of the data in Flash.
- `dest`: pointer to the destination buffer
- `size`: length of data

esp_err_t **spi_flash_mmap**(size_t *src_addr*, size_t *size*, *spi_flash_mmap_memory_t* *memory*, **const** void **out_ptr*, *spi_flash_mmap_handle_t* **out_handle*)

Map region of flash memory into data or instruction address space.

This function allocates sufficient number of 64kB MMU pages and configures them to map the requested region of flash memory into the address space. It may reuse MMU pages which already provide the required mapping.

As with any allocator, if mmap/munmap are heavily used then the address space may become fragmented. To troubleshoot issues with page allocation, use spi_flash_mmap_dump() function.

Return ESP_OK on success, ESP_ERR_NO_MEM if pages can not be allocated

Parameters

- `src_addr`: Physical address in flash where requested region starts. This address *must* be aligned to 64kB boundary (SPI_FLASH_MMU_PAGE_SIZE)
- `size`: Size of region to be mapped. This size will be rounded up to a 64kB boundary
- `memory`: Address space where the region should be mapped (data or instruction)
- `out_ptr`: Output, pointer to the mapped memory region
- `out_handle`: Output, handle which should be used for spi_flash_munmap call

esp_err_t **spi_flash_mmap_pages**(**const** int **pages*, size_t *page_count*, *spi_flash_mmap_memory_t* *memory*, **const** void **out_ptr*, *spi_flash_mmap_handle_t* **out_handle*)

Map sequences of pages of flash memory into data or instruction address space.

This function allocates sufficient number of 64kB MMU pages and configures them to map the indicated pages of flash memory contiguously into address space. In this respect, it works in a similar way as spi_flash_mmap() but it allows mapping a (maybe non-contiguous) set of pages into a contiguous region of memory.

Return

- ESP_OK on success
- ESP_ERR_NO_MEM if pages can not be allocated
- ESP_ERR_INVALID_ARG if pagecount is zero or pages array is not in internal memory

Parameters

- `pages`: An array of numbers indicating the 64kB pages in flash to be mapped contiguously into memory. These indicate the indexes of the 64kB pages, not the byte-size addresses as used in other functions. Array must be located in internal memory.
- `page_count`: Number of entries in the pages array
- `memory`: Address space where the region should be mapped (instruction or data)
- `out_ptr`: Output, pointer to the mapped memory region
- `out_handle`: Output, handle which should be used for spi_flash_munmap call

void **spi_flash_munmap**(*spi_flash_mmap_handle_t handle*)

Release region previously obtained using spi_flash_mmap.

Note Calling this function will not necessarily unmap memory region. Region will only be unmapped when there are no other handles which reference this region. In case of partially overlapping regions it is possible that memory will be unmapped partially.

Parameters

- `handle`: Handle obtained from spi_flash_mmap

void **spi_flash_mmap_dump**()

Display information about mapped regions.

This function lists handles obtained using spi_flash_mmap, along with range of pages allocated to each handle. It also lists all non-zero entries of MMU table and corresponding reference counts.

uint32_t **spi_flash_mmap_get_free_pages**(*spi_flash_mmap_memory_t memory*)

get free pages number which can be mmap

This function will return number of free pages available in mmu table. This could be useful before calling actual spi_flash_mmap (maps flash range to DCache or ICache memory) to check if there is sufficient space available for mapping.

Return number of free pages which can be mmaped

Parameters

- `memory`: memory type of MMU table free page

size_t **spi_flash_cache2phys**(**const** void *_cached_)

Given a memory address where flash is mapped, return the corresponding physical flash offset.

Cache address does not have have been assigned via spi_flash_mmap(), any address in memory mapped flash space can be looked up.

Return

- SPI_FLASH_CACHE2PHYS_FAIL If cache address is outside flash cache region, or the address is not mapped.
- Otherwise, returns physical offset in flash

Parameters

- `cached`: Pointer to flashed cached memory.

`const` void *`spi_flash_phys2cache`(size_t *phys_offs*, *spi_flash_mmap_memory_t memory*)

Given a physical offset in flash, return the address where it is mapped in the memory space.

Physical address does not have to have been assigned via spi_flash_mmap(), any address in flash can be looked up.

Note Only the first matching cache address is returned. If MMU flash cache table is configured so multiple entries point to the same physical address, there may be more than one cache address corresponding to that physical address. It is also possible for a single physical address to be mapped to both the IROM and DROM regions.

Note This function doesn' t impose any alignment constraints, but if memory argument is SPI_FLASH_MMAP_INST and phys_offs is not 4-byte aligned, then reading from the returned pointer will result in a crash.

Return

- NULL if the physical address is invalid or not mapped to flash cache of the specified memory type.
- Cached memory address (in IROM or DROM space) corresponding to phys_offs.

Parameters

- `phys_offs`: Physical offset in flash memory to look up.
- `memory`: Address space type to look up a flash cache address mapping for (instruction or data)

bool `spi_flash_cache_enabled`()

Check at runtime if flash cache is enabled on both CPUs.

Return true if both CPUs have flash cache enabled, false otherwise.

void `spi_flash_guard_set`(`const` *spi_flash_guard_funcs_t* **funcs*)

Sets guard functions to access flash.

Note Pointed structure and corresponding guard functions should not reside in flash. For example structure can be placed in DRAM and functions in IRAM sections.

Parameters

- `funcs`: pointer to structure holding flash access guard functions.

`const` *spi_flash_guard_funcs_t* *`spi_flash_guard_get()`

Get the guard functions used for flash access.

Return The guard functions that were set via spi_flash_guard_set(). These functions can be called if implementing custom low-level SPI flash operations.

Structures

`struct spi_flash_guard_funcs_t`

Structure holding SPI flash access critical sections management functions.

Flash API uses two types of flash access management functions: 1) Functions which prepare/restore flash cache and interrupts before calling appropriate ROM functions (SPIWrite, SPIRead and SPIEraseBlock):

- ' start' function should disables flash cache and non-IRAM interrupts and is invoked before the call to one of ROM function above.
- ' end' function should restore state of flash cache and non-IRAM interrupts and is invoked after the call to one of ROM function above. These two functions are not recursive. 2) Functions which synchronizes access to internal data used by flash API. This functions are mostly intended to synchronize access to flash API internal data in multithreaded environment and use OS primitives:
- ' op_lock' locks access to flash API internal data.
- ' op_unlock' unlocks access to flash API internal data. These two functions are recursive and can be used around the outside of multiple calls to 'start' & 'end', in order to create atomic multi-part flash operations. 3) When CONFIG_SPI_FLASH_WRITING_DANGEROUS_REGIONS_ALLOWED is disabled, flash writing/erasing API checks for addresses provided by user to avoid corruption of critical flash regions (bootloader, partition table, running application etc.).

Different versions of the guarding functions should be used depending on the context of execution (with or without functional OS). In normal conditions when flash API is called from task the functions use OS primitives. When there is no OS at all or when it is not guaranteed that OS is functional (accessing flash from exception handler) these functions cannot use OS primitives or even does not need them (multithreaded access is not possible).

Note Structure and corresponding guard functions should not reside in flash. For example structure can be placed in DRAM and functions in IRAM sections.

Public Members

spi_flash_guard_start_func_t **start**
critical section start function.

spi_flash_guard_end_func_t **end**
critical section end function.

spi_flash_op_lock_func_t **op_lock**
flash access API lock function.

spi_flash_op_unlock_func_t **op_unlock**
flash access API unlock function.

spi_flash_is_safe_write_address_t **is_safe_write_address**
checks flash write addresses.

spi_flash_os_yield_t **yield**
yield to the OS during flash erase

Macros

ESP_ERR_FLASH_BASE

ESP_ERR_FLASH_OP_FAIL

ESP_ERR_FLASH_OP_TIMEOUT

SPI_FLASH_SEC_SIZE
SPI Flash sector size

SPI_FLASH_MMU_PAGE_SIZE
Flash cache MMU mapping page size

SPI_FLASH_CACHE2PHYS_FAIL

Type Definitions

typedef uint32_t **spi_flash_mmap_handle_t**
Opaque handle for memory region obtained from spi_flash_mmap.

typedef void (***spi_flash_guard_start_func_t**)(void)
SPI flash critical section enter function.

typedef void (***spi_flash_guard_end_func_t**)(void)
SPI flash critical section exit function.

typedef void (***spi_flash_op_lock_func_t**)(void)
SPI flash operation lock function.

typedef void (*spi_flash_op_unlock_func_t)(void)

SPI flash operation unlock function.

typedef bool (*spi_flash_is_safe_write_address_t)(size_t addr, size_t size)

Function to protect SPI flash critical regions corruption.

typedef void (*spi_flash_os_yield_t)(void)

Function to yield to the OS during erase operation.

Enumerations

enum spi_flash_mmap_memory_t

Enumeration which specifies memory space requested in an mmap call.

Values:

SPI_FLASH_MMAP_DATA

map to data memory (Vaddr0), allows byte-aligned access, 4 MB total

SPI_FLASH_MMAP_INST

map to instruction memory (Vaddr1-3), allows only 4-byte-aligned access, 11 MB total

API Reference - Partition Table

Header File

- spi_flash/include/esp_partition.h

Functions

esp_partition_iterator_t esp_partition_find(*esp_partition_type_t type*, *esp_partition_subtype_t subtype*, const char *label)

Find partition based on one or more parameters.

Return iterator which can be used to enumerate all the partitions found, or NULL if no partitions were found. Iterator obtained through this function has to be released using esp_partition_iterator_release when not used any more.

Parameters

- type: Partition type, one of esp_partition_type_t values
- subtype: Partition subtype, one of esp_partition_subtype_t values. To find all partitions of given type, use ESP_PARTITION_SUBTYPE_ANY.
- label: (optional) Partition label. Set this value if looking for partition with a specific name. Pass NULL otherwise.

const *esp_partition_t* ***esp_partition_find_first**(*esp_partition_type_t* *type*, *esp_partition_subtype_t* *subtype*, const char **label*)

Find first partition based on one or more parameters.

Return pointer to *esp_partition_t* structure, or NULL if no partition is found. This pointer is valid for the lifetime of the application.

Parameters

- `type`: Partition type, one of esp_partition_type_t values
- `subtype`: Partition subtype, one of esp_partition_subtype_t values. To find all partitions of given type, use ESP_PARTITION_SUBTYPE_ANY.
- `label`: (optional) Partition label. Set this value if looking for partition with a specific name. Pass NULL otherwise.

const *esp_partition_t* ***esp_partition_get**(*esp_partition_iterator_t* *iterator*)

Get *esp_partition_t* structure for given partition.

Return pointer to *esp_partition_t* structure. This pointer is valid for the lifetime of the application.

Parameters

- `iterator`: Iterator obtained using esp_partition_find. Must be non-NULL.

esp_partition_iterator_t **esp_partition_next**(*esp_partition_iterator_t* *iterator*)

Move partition iterator to the next partition found.

Any copies of the iterator will be invalid after this call.

Return NULL if no partition was found, valid esp_partition_iterator_t otherwise.

Parameters

- `iterator`: Iterator obtained using esp_partition_find. Must be non-NULL.

void **esp_partition_iterator_release**(*esp_partition_iterator_t* *iterator*)

Release partition iterator.

Parameters

- `iterator`: Iterator obtained using esp_partition_find. Must be non-NULL.

const *esp_partition_t* ***esp_partition_verify**(const *esp_partition_t* **partition*)

Verify partition data.

Given a pointer to partition data, verify this partition exists in the partition table (all fields match.)

This function is also useful to take partition data which may be in a RAM buffer and convert it to a pointer to the permanent partition data stored in flash.

Pointers returned from this function can be compared directly to the address of any pointer returned from *esp_partition_get()*, as a test for equality.

Return

- If partition not found, returns NULL.
- If found, returns a pointer to the *esp_partition_t* structure in flash. This pointer is always valid for the lifetime of the application.

Parameters

- `partition`: Pointer to partition data to verify. Must be non-NULL. All fields of this structure must match the partition table entry in flash for this function to return a successful match.

esp_err_t **esp_partition_read**(**const** *esp_partition_t* **partition*, size_t *src_offset*, void **dst*, size_t *size*)

Read data from the partition.

Return ESP_OK, if data was read successfully; ESP_ERR_INVALID_ARG, if src_offset exceeds partition size; ESP_ERR_INVALID_SIZE, if read would go out of bounds of the partition; or one of error codes from lower-level flash driver.

Parameters

- `partition`: Pointer to partition structure obtained using esp_partition_find_first or esp_partition_get. Must be non-NULL.
- `dst`: Pointer to the buffer where data should be stored. Pointer must be non-NULL and buffer must be at least 'size' bytes long.
- `src_offset`: Address of the data to be read, relative to the beginning of the partition.
- `size`: Size of data to be read, in bytes.

esp_err_t **esp_partition_write**(**const** *esp_partition_t* **partition*, size_t *dst_offset*, **const** void **src*, size_t *size*)

Write data to the partition.

Before writing data to flash, corresponding region of flash needs to be erased. This can be done using esp_partition_erase_range function.

Partitions marked with an encryption flag will automatically be written via the spi_flash_write_encrypted() function. If writing to an encrypted partition, all write offsets and lengths must be multiples of 16 bytes. See the spi_flash_write_encrypted() function for more details. Unencrypted partitions do not have this restriction.

Note Prior to writing to flash memory, make sure it has been erased with esp_partition_erase_range call.

Return ESP_OK, if data was written successfully; ESP_ERR_INVALID_ARG, if dst_offset exceeds partition size; ESP_ERR_INVALID_SIZE, if write would go out of bounds of the partition; or one of error codes from lower-level flash driver.

Parameters

- `partition`: Pointer to partition structure obtained using esp_partition_find_first or esp_partition_get. Must be non-NULL.
- `dst_offset`: Address where the data should be written, relative to the beginning of the partition.
- `src`: Pointer to the source buffer. Pointer must be non-NULL and buffer must be at least 'size' bytes long.
- `size`: Size of data to be written, in bytes.

esp_err_t **esp_partition_erase_range(const** *esp_partition_t* **partition*, uint32_t *start_addr*, uint32_t *size*)

Erase part of the partition.

Return ESP_OK, if the range was erased successfully; ESP_ERR_INVALID_ARG, if iterator or dst are NULL; ESP_ERR_INVALID_SIZE, if erase would go out of bounds of the partition; or one of error codes from lower-level flash driver.

Parameters

- `partition`: Pointer to partition structure obtained using esp_partition_find_first or esp_partition_get. Must be non-NULL.
- `start_addr`: Address where erase operation should start. Must be aligned to 4 kilobytes.
- `size`: Size of the range which should be erased, in bytes. Must be divisible by 4 kilobytes.

esp_err_t **esp_partition_mmap(const** *esp_partition_t* **partition*, uint32_t *offset*, uint32_t *size*, *spi_flash_mmap_memory_t* *memory*, **const** void ***out_ptr*, *spi_flash_mmap_handle_t* **out_handle*)

Configure MMU to map partition into data memory.

Unlike spi_flash_mmap function, which requires a 64kB aligned base address, this function doesn't impose such a requirement. If offset results in a flash address which is not aligned to 64kB boundary, address will be rounded to the lower 64kB boundary, so that mapped region includes requested range. Pointer returned via out_ptr argument will be adjusted to point to the requested offset (not necessarily to the beginning of mmap-ed region).

To release mapped memory, pass handle returned via out_handle argument to spi_flash_munmap function.

Return ESP_OK, if successful

Parameters

- `partition`: Pointer to partition structure obtained using esp_partition_find_first or esp_partition_get. Must be non-NULL.
- `offset`: Offset from the beginning of partition where mapping should start.
- `size`: Size of the area to be mapped.
- `memory`: Memory space where the region should be mapped
- `out_ptr`: Output, pointer to the mapped memory region
- `out_handle`: Output, handle which should be used for spi_flash_munmap call

esp_err_t **esp_partition_get_sha256**(**const** *esp_partition_t* **partition*, uint8_t **sha_256*)

Get SHA-256 digest for required partition.

For apps with SHA-256 appended to the app image, the result is the appended SHA-256 value for the app image content. The hash is verified before returning, if app content is invalid then the function returns ESP_ERR_IMAGE_INVALID. For apps without SHA-256 appended to the image, the result is the SHA-256 of all bytes in the app image. For other partition types, the result is the SHA-256 of the entire partition.

Return

- ESP_OK: In case of successful operation.
- ESP_ERR_INVALID_ARG: The size was 0 or the sha_256 was NULL.
- ESP_ERR_NO_MEM: Cannot allocate memory for sha256 operation.
- ESP_ERR_IMAGE_INVALID: App partition doesn't contain a valid app image.
- ESP_FAIL: An allocation error occurred.

Parameters

- `partition`: Pointer to info for partition containing app or data. (fields: address, size and type, are required to be filled).
- `sha_256`: Returned SHA-256 digest for a given partition.

bool **esp_partition_check_identity**(**const** *esp_partition_t* **partition_1*, **const** *esp_partition_t* **partition_2*)

Check for the identity of two partitions by SHA-256 digest.

Return

- True: In case of the two firmware is equal.
- False: Otherwise

Parameters

- `partition_1`: Pointer to info for partition 1 containing app or data. (fields: address, size and type, are required to be filled).
- `partition_2`: Pointer to info for partition 2 containing app or data. (fields: address, size and type, are required to be filled).

Structures

`struct esp_partition_t`

partition information structure

This is not the format in flash, that format is esp_partition_info_t.

However, this is the format used by this API.

Public Members

esp_partition_type_t **type**

partition type (app/data)

esp_partition_subtype_t **subtype**

partition subtype

uint32_t **address**

starting address of the partition in flash

uint32_t **size**

size of the partition, in bytes

char **label**[17]

partition label, zero-terminated ASCII string

bool **encrypted**

flag is set to true if partition is encrypted

Macros

`ESP_PARTITION_SUBTYPE_OTA(i)`

Convenience macro to get esp_partition_subtype_t value for the i-th OTA partition.

Type Definitions

typedef struct esp_partition_iterator_opaque_ ***esp_partition_iterator_t**

Opaque partition iterator type.

Enumerations

enum esp_partition_type_t

Partition type.

Note Keep this enum in sync with PartitionDefinition class gen_esp32part.py

Values:

ESP_PARTITION_TYPE_APP = 0x00

Application partition type.

ESP_PARTITION_TYPE_DATA = 0x01

Data partition type.

enum esp_partition_subtype_t

Partition subtype.

Note Keep this enum in sync with PartitionDefinition class gen_esp32part.py

Values:

ESP_PARTITION_SUBTYPE_APP_FACTORY = 0x00

Factory application partition.

ESP_PARTITION_SUBTYPE_APP_OTA_MIN = 0x10

Base for OTA partition subtypes.

ESP_PARTITION_SUBTYPE_APP_OTA_0 = ESP_PARTITION_SUBTYPE_APP_OTA_MIN + 0

OTA partition 0.

ESP_PARTITION_SUBTYPE_APP_OTA_1 = ESP_PARTITION_SUBTYPE_APP_OTA_MIN + 1

OTA partition 1.

ESP_PARTITION_SUBTYPE_APP_OTA_2 = ESP_PARTITION_SUBTYPE_APP_OTA_MIN + 2

OTA partition 2.

ESP_PARTITION_SUBTYPE_APP_OTA_3 = ESP_PARTITION_SUBTYPE_APP_OTA_MIN + 3

OTA partition 3.

ESP_PARTITION_SUBTYPE_APP_OTA_4 = ESP_PARTITION_SUBTYPE_APP_OTA_MIN + 4

OTA partition 4.

ESP_PARTITION_SUBTYPE_APP_OTA_5 = ESP_PARTITION_SUBTYPE_APP_OTA_MIN + 5

OTA partition 5.

ESP_PARTITION_SUBTYPE_APP_OTA_6 = ESP_PARTITION_SUBTYPE_APP_OTA_MIN + 6

OTA partition 6.

ESP_PARTITION_SUBTYPE_APP_OTA_7 = ESP_PARTITION_SUBTYPE_APP_OTA_MIN + 7
OTA partition 7.

ESP_PARTITION_SUBTYPE_APP_OTA_8 = ESP_PARTITION_SUBTYPE_APP_OTA_MIN + 8
OTA partition 8.

ESP_PARTITION_SUBTYPE_APP_OTA_9 = ESP_PARTITION_SUBTYPE_APP_OTA_MIN + 9
OTA partition 9.

ESP_PARTITION_SUBTYPE_APP_OTA_10 = ESP_PARTITION_SUBTYPE_APP_OTA_MIN + 10
OTA partition 10.

ESP_PARTITION_SUBTYPE_APP_OTA_11 = ESP_PARTITION_SUBTYPE_APP_OTA_MIN + 11
OTA partition 11.

ESP_PARTITION_SUBTYPE_APP_OTA_12 = ESP_PARTITION_SUBTYPE_APP_OTA_MIN + 12
OTA partition 12.

ESP_PARTITION_SUBTYPE_APP_OTA_13 = ESP_PARTITION_SUBTYPE_APP_OTA_MIN + 13
OTA partition 13.

ESP_PARTITION_SUBTYPE_APP_OTA_14 = ESP_PARTITION_SUBTYPE_APP_OTA_MIN + 14
OTA partition 14.

ESP_PARTITION_SUBTYPE_APP_OTA_15 = ESP_PARTITION_SUBTYPE_APP_OTA_MIN + 15
OTA partition 15.

ESP_PARTITION_SUBTYPE_APP_OTA_MAX = ESP_PARTITION_SUBTYPE_APP_OTA_MIN + 16
Max subtype of OTA partition.

ESP_PARTITION_SUBTYPE_APP_TEST = 0x20
Test application partition.

ESP_PARTITION_SUBTYPE_DATA_OTA = 0x00
OTA selection partition.

ESP_PARTITION_SUBTYPE_DATA_PHY = 0x01
PHY init data partition.

ESP_PARTITION_SUBTYPE_DATA_NVS = 0x02
NVS partition.

ESP_PARTITION_SUBTYPE_DATA_COREDUMP = 0x03
COREDUMP partition.

ESP_PARTITION_SUBTYPE_DATA_NVS_KEYS = 0x04
Partition for NVS keys.

ESP_PARTITION_SUBTYPE_DATA_EFUSE_EM = 0x05
Partition for emulate eFuse bits.

`ESP_PARTITION_SUBTYPE_DATA_ESPHTTPD` = 0x80
ESPHTTPD partition.

`ESP_PARTITION_SUBTYPE_DATA_FAT` = 0x81
FAT partition.

`ESP_PARTITION_SUBTYPE_DATA_SPIFFS` = 0x82
SPIFFS partition.

`ESP_PARTITION_SUBTYPE_ANY` = 0xff
Used to search for partitions with any subtype.

API Reference - Flash Encrypt

Header File

- bootloader_support/include/esp_flash_encrypt.h

Functions

`static` bool **esp_flash_encryption_enabled**(void)
Is flash encryption currently enabled in hardware?

Flash encryption is enabled if the FLASH_CRYPT_CNT efuse has an odd number of bits set.

Return true if flash encryption is enabled.

esp_err_t **esp_flash_encrypt_check_and_update**(void)

esp_err_t **esp_flash_encrypt_region**(uint32_t *src_addr*, size_t *data_length*)
Encrypt-in-place a block of flash sectors.

Note This function resets RTC_WDT between operations with sectors.

Return ESP_OK if all operations succeeded, ESP_ERR_FLASH_OP_FAIL if SPI flash fails, ESP_ERR_FLASH_OP_TIMEOUT if flash times out.

Parameters

- `src_addr`: Source offset in flash. Should be multiple of 4096 bytes.
- `data_length`: Length of data to encrypt in bytes. Will be rounded up to next multiple of 4096 bytes.

void **esp_flash_write_protect_crypt_cnt**()
Write protect FLASH_CRYPT_CNT.

Intended to be called as a part of boot process if flash encryption is enabled but secure boot is not used. This should protect against serial re-flashing of an unauthorised code in absence of secure boot.

Note To support disabling UART Download Mode on ESP32 V3 only, this function doesn't write protect FLASH_CRYPT_CNT but instead sets it to the max value (effectively the same result but allows burning the UART_DL_DIS efuse later on, as this is otherwise also disabled if FLASH_CRYPT_CNT is write protected.)

3.6.2 SD/SDIO/MMC Driver

Overview

SD/SDIO/MMC driver currently supports SD memory, SDIO cards, and eMMC chips. This protocol level driver builds on top of SDMMC and SD SPI host drivers.

SDMMC and SD SPI host drivers (`driver/sdmmc_host.h`) provide APIs to send commands to the slave device(s), send and receive data, and handle error conditions on the bus.

- See *SDMMC Host API* for functions used to initialize and configure SDMMC host.
- See *SD SPI Host API* for functions used to initialize and configure SD SPI host.

SDMMC protocol layer (`sdmmc_cmd.h`), described in this document, handles specifics of SD protocol such as card initialization and data transfer commands.

Protocol layer works with the host via *sdmmc_host_t* structure. This structure contains pointers to various functions of the host.

Application Example

An example which combines SDMMC driver with FATFS library is provided in `examples/storage/sd_card` directory. This example initializes the card, writes and reads data from it using POSIX and C library APIs. See README.md file in the example directory for more information.

Protocol layer APIs

Protocol layer is given *sdmmc_host_t* structure which describes the SD/MMC host driver, lists its capabilites, and provides pointers to functions of the driver. Protocol layer stores card-specific information in *sdmmc_card_t* structure. When sending commands to the SD/MMC host driver, protocol layer uses *sdmmc_command_t* structure to describe the command, argument, expected return value, and data to transfer, if any.

Usage with SD memory cards

1. Call the host driver functions to initialize the host (e.g. *sdmmc_host_init()*, *sdmmc_host_init_slot()*).
2. Call *sdmmc_card_init()* to initialize the card, passing it host driver information (`host`) and a pointer to *sdmmc_card_t* structure which will be filled in (`card`).
3. To read and write sectors of the card, use *sdmmc_read_sectors()* and *sdmmc_write_sectors()*, passing the pointer to card information structure (`card`).
4. When card is not used anymore, call the host driver function to disable the host peripheral and free resources allocated by the driver (e.g. *sdmmc_host_deinit()*).

Usage with eMMC chips

From the perspective of the protocol layer, eMMC memory chips behave the same way as SD memory cards. Because of similarity of the protocol, even though eMMC are chips don't have the "card" form factor, same terminology is used as for SD cards (*sdmmc_card_t*, *sdmmc_card_init*). Note that eMMC chips can not be used over SPI, therefore are incompatible with SD SPI host driver.

To initialize eMMC memory and do read/write operations, follow the steps listed above for SD cards.

Usage with SDIO cards

Initialization an probing process is the same as with SD memory cards. Only data transfer commands differ in SDIO mode.

During probing and card initialization (done by *sdmmc_card_init()*), the driver only configures the following registers of the IO card:

1. The IO portion of the card is reset by setting RES bit in "I/O Abort" (0x06) register.
2. If 4-line mode is enalbed in host and slot configuration, driver attempts to set "Bus width" field in "Bus Interface Control" (0x07) register. If that succeeds (which means that slave supports 4-line mode), host is also switched to 4-line mode.
3. If high-speed mode is enabled in host configuration, SHS bit is set in "High Speed" (0x13) register.

In particular, the driver does not set any of the bits in I/O Enable, Int Enable registers, IO block sizes, etc. Applications can set these by calling *sdmmc_io_write_byte()*.

For card configuration and data transfer, use one of the following functions:

- *sdmmc_io_read_byte()*, *sdmmc_io_write_byte()* —read and write single byte using IO_RW_DIRECT (CMD52).

- *sdmmc_io_read_bytes()*, *sdmmc_io_write_bytes()* —read and write multiple bytes using IO_RW_EXTENDED (CMD53), in byte mode.
- *sdmmc_io_read_blocks()*, *sdmmc_io_write_blocks()* —read and write blocks of data using IO_RW_EXTENDED (CMD53), in block mode.

SDIO interrupts can be enabled by the application using *sdmmc_io_enable_int()* function. When using SDIO in 1-line mode, D1 line also needs to be connected to use SDIO interrupts.

The application can wait for SDIO interrupt to occur using *sdmmc_io_wait_int()*.

Combo (memory + IO) cards

The driver does not support SD combo cards. Combo cards will be treated as IO cards.

Thread safety

Most applications need to use the protocol layer only in one task; therefore the protocol layer doesn't implement any kind of locking on the *sdmmc_card_t* structure, or when accessing SDMMC or SD SPI host drivers. Such locking is usually implemented in the higher layer (e.g. in the filesystem driver).

API Reference

Header File

- sdmmc/include/sdmmc_cmd.h

Functions

esp_err_t **sdmmc_card_init**(**const** *sdmmc_host_t* **host*, *sdmmc_card_t* **out_card*)

Probe and initialize SD/MMC card using given host

Note Only SD cards (SDSC and SDHC/SDXC) are supported now. Support for MMC/eMMC cards will be added later.

Return

- ESP_OK on success
- One of the error codes from SDMMC host controller

Parameters

- `host`: pointer to structure defining host controller

- `out_card`: pointer to structure which will receive information about the card when the function completes

void **sdmmc_card_print_info**(FILE *_stream_, **const** _sdmmc_card_t_ *_card_)

Print information about the card to a stream.

Parameters

- `stream`: stream obtained using fopen or fdopen
- `card`: card information structure initialized using sdmmc_card_init

_esp_err_t_ **sdmmc_write_sectors**(_sdmmc_card_t_ *_card_, **const** void *_src_, size_t _start_sector_, size_t _sector_count_)

Write given number of sectors to SD/MMC card

Return

- ESP_OK on success
- One of the error codes from SDMMC host controller

Parameters

- `card`: pointer to card information structure previously initialized using sdmmc_card_init
- `src`: pointer to data buffer to read data from; data size must be equal to sector_count * card->csd.sector_size
- `start_sector`: sector where to start writing
- `sector_count`: number of sectors to write

_esp_err_t_ **sdmmc_read_sectors**(_sdmmc_card_t_ *_card_, void *_dst_, size_t _start_sector_, size_t _sector_count_)

Write given number of sectors to SD/MMC card

Return

- ESP_OK on success
- One of the error codes from SDMMC host controller

Parameters

- `card`: pointer to card information structure previously initialized using sdmmc_card_init
- `dst`: pointer to data buffer to write into; buffer size must be at least sector_count * card->csd.sector_size
- `start_sector`: sector where to start reading
- `sector_count`: number of sectors to read

esp_err_t **sdmmc_io_read_byte**(*sdmmc_card_t* **card*, uint32_t *function*, uint32_t *reg*, uint8_t **out_byte*)

Read one byte from an SDIO card using IO_RW_DIRECT (CMD52)

Return

- ESP_OK on success
- One of the error codes from SDMMC host controller

Parameters

- `card`: pointer to card information structure previously initialized using sdmmc_card_init
- `function`: IO function number
- `reg`: byte address within IO function
- `out_byte`: output, receives the value read from the card

esp_err_t **sdmmc_io_write_byte**(*sdmmc_card_t* **card*, uint32_t *function*, uint32_t *reg*, uint8_t *in_byte*, uint8_t **out_byte*)

Write one byte to an SDIO card using IO_RW_DIRECT (CMD52)

Return

- ESP_OK on success
- One of the error codes from SDMMC host controller

Parameters

- `card`: pointer to card information structure previously initialized using sdmmc_card_init
- `function`: IO function number
- `reg`: byte address within IO function
- `in_byte`: value to be written
- `out_byte`: if not NULL, receives new byte value read from the card (read-after-write).

esp_err_t **sdmmc_io_read_bytes**(*sdmmc_card_t* **card*, uint32_t *function*, uint32_t *addr*, void **dst*, size_t *size*)

Read multiple bytes from an SDIO card using IO_RW_EXTENDED (CMD53)

This function performs read operation using CMD53 in byte mode. For block mode, see sdmmc_io_read_blocks.

Return

- ESP_OK on success
- ESP_ERR_INVALID_SIZE if size exceeds 512 bytes

- One of the error codes from SDMMC host controller

Parameters

- `card`: pointer to card information structure previously initialized using sdmmc_card_init
- `function`: IO function number
- `addr`: byte address within IO function where reading starts
- `dst`: buffer which receives the data read from card
- `size`: number of bytes to read

esp_err_t **sdmmc_io_write_bytes**(*sdmmc_card_t* **card*, uint32_t *function*, uint32_t *addr*, **const** void **src*, size_t *size*)

Write multiple bytes to an SDIO card using IO_RW_EXTENDED (CMD53)

This function performs write operation using CMD53 in byte mode. For block mode, see sdmmc_io_write_blocks.

Return

- ESP_OK on success
- ESP_ERR_INVALID_SIZE if size exceeds 512 bytes
- One of the error codes from SDMMC host controller

Parameters

- `card`: pointer to card information structure previously initialized using sdmmc_card_init
- `function`: IO function number
- `addr`: byte address within IO function where writing starts
- `src`: data to be written
- `size`: number of bytes to write

esp_err_t **sdmmc_io_read_blocks**(*sdmmc_card_t* **card*, uint32_t *function*, uint32_t *addr*, void **dst*, size_t *size*)

Read blocks of data from an SDIO card using IO_RW_EXTENDED (CMD53)

This function performs read operation using CMD53 in block mode. For byte mode, see sdmmc_io_read_bytes.

Return

- ESP_OK on success
- ESP_ERR_INVALID_SIZE if size is not divisible by 512 bytes
- One of the error codes from SDMMC host controller

Parameters

- `card`: pointer to card information structure previously initialized using sdmmc_card_init
- `function`: IO function number
- `addr`: byte address within IO function where writing starts
- `dst`: buffer which receives the data read from card
- `size`: number of bytes to read, must be divisible by the card block size.

esp_err_t **sdmmc_io_write_blocks**(*sdmmc_card_t* **card*, uint32_t *function*, uint32_t *addr*, **const** void **src*, size_t *size*)

Write blocks of data to an SDIO card using IO_RW_EXTENDED (CMD53)

This function performs write operation using CMD53 in block mode. For byte mode, see sdmmc_io_write_bytes.

Return

- ESP_OK on success
- ESP_ERR_INVALID_SIZE if size is not divisible by 512 bytes
- One of the error codes from SDMMC host controller

Parameters

- `card`: pointer to card information structure previously initialized using sdmmc_card_init
- `function`: IO function number
- `addr`: byte address within IO function where writing starts
- `src`: data to be written
- `size`: number of bytes to read, must be divisible by the card block size.

esp_err_t **sdmmc_io_enable_int**(*sdmmc_card_t* **card*)

Enable SDIO interrupt in the SDMMC host

Return

- ESP_OK on success
- ESP_ERR_NOT_SUPPORTED if the host controller does not support IO interrupts

Parameters

- `card`: pointer to card information structure previously initialized using sdmmc_card_init

esp_err_t **sdmmc_io_wait_int**(*sdmmc_card_t* **card*, TickType_t *timeout_ticks*)

Block until an SDIO interrupt is received

Slave uses D1 line to signal interrupt condition to the host. This function can be used to wait for the interrupt.

Return

- ESP_OK if the interrupt is received
- ESP_ERR_NOT_SUPPORTED if the host controller does not support IO interrupts
- ESP_ERR_TIMEOUT if the interrupt does not happen in timeout_ticks

Parameters

- `card`: pointer to card information structure previously initialized using sdmmc_card_init
- `timeout_ticks`: time to wait for the interrupt, in RTOS ticks

Header File

- driver/include/driver/sdmmc_types.h

Structures

struct sdmmc_csd_t

Decoded values from SD card Card Specific Data register

Public Members

int **csd_ver**

CSD structure format

int **mmc_ver**

MMC version (for CID format)

int **capacity**

total number of sectors

int **sector_size**

sector size in bytes

int **read_block_len**

block length for reads

int **card_command_class**

Card Command Class for SD

int **tr_speed**

Max transfer speed

struct sdmmc_cid_t

Decoded values from SD card Card IDentification register

Public Members

int **mfg_id**

manufacturer identification number

int **oem_id**

OEM/product identification number

char **name**[8]

product name (MMC v1 has the longest)

int **revision**

product revision

int **serial**

product serial number

int **date**

manufacturing date

struct sdmmc_scr_t

Decoded values from SD Configuration Register

Public Members

int **sd_spec**

SD Physical layer specification version, reported by card

int **bus_width**

bus widths supported by card: BIT(0) —1-bit bus, BIT(2) —4-bit bus

struct sdmmc_ext_csd_t

Decoded values of Extended Card Specific Data

Public Members

uint8_t **power_class**

Power class used by the card

struct sdmmc_switch_func_rsp_t

SD SWITCH_FUNC response buffer

Public Members

uint32_t **data**[512 / 8 / sizeof(uint32_t)]
response data

struct sdmmc_command_t
SD/MMC command information

Public Members

uint32_t **opcode**
SD or MMC command index

uint32_t **arg**
SD/MMC command argument

sdmmc_response_t **response**
response buffer

void ***data**
buffer to send or read into

size_t **datalen**
length of data buffer

size_t **blklen**
block length

int **flags**
see below

esp_err_t **error**
error returned from transfer

int **timeout_ms**
response timeout, in milliseconds

struct sdmmc_host_t
SD/MMC Host description

This structure defines properties of SD/MMC host and functions of SD/MMC host which can be used by upper layers.

Public Members

uint32_t **flags**
flags defining host properties

int **slot**

slot number, to be passed to host functions

int **max_freq_khz**

max frequency supported by the host

float **io_voltage**

I/O voltage used by the controller (voltage switching is not supported)

esp_err_t (*__init__)(void)

Host function to initialize the driver

esp_err_t (*__set_bus_width__)(int slot, size_t width)

host function to set bus width

size_t (*__get_bus_width__)(int slot)

host function to get bus width

esp_err_t (*__set_bus_ddr_mode__)(int slot, bool ddr_enable)

host function to set DDR mode

esp_err_t (*__set_card_clk__)(int slot, uint32_t freq_khz)

host function to set card clock frequency

esp_err_t (*__do_transaction__)(int slot, *sdmmc_command_t* *cmdinfo)

host function to do a transaction

esp_err_t (*__deinit__)(void)

host function to deinitialize the driver

esp_err_t (*__io_int_enable__)(int slot)

Host function to enable SDIO interrupt line

esp_err_t (*__io_int_wait__)(int slot, TickType_t timeout_ticks)

Host function to wait for SDIO interrupt line to be active

int **command_timeout_ms**

timeout, in milliseconds, of a single command. Set to 0 to use the default value.

struct sdmmc_card_t

SD/MMC card information structure

Public Members

sdmmc_host_t **host**

Host with which the card is associated

uint32_t **ocr**

OCR (Operation Conditions Register) value

sdmmc_cid_t **cid**
: decoded CID (Card IDentification) register value

sdmmc_csd_t **csd**
: decoded CSD (Card-Specific Data) register value

sdmmc_scr_t **scr**
: decoded SCR (SD card Configuration Register) value

sdmmc_ext_csd_t **ext_csd**
: decoded EXT_CSD (Extended Card Specific Data) register value

uint16_t **rca**
: RCA (Relative Card Address)

uint16_t **max_freq_khz**
: Maximum frequency, in kHz, supported by the card

uint32_t **is_mem**
: Bit indicates if the card is a memory card

uint32_t **is_sdio**
: Bit indicates if the card is an IO card

uint32_t **is_mmc**
: Bit indicates if the card is MMC

uint32_t **num_io_functions**
: If is_sdio is 1, contains the number of IO functions on the card

uint32_t **log_bus_width**
: log2(bus width supported by card)

uint32_t **is_ddr**
: Card supports DDR mode

uint32_t **reserved**
: Reserved for future expansion

Macros

SDMMC_HOST_FLAG_1BIT
: host supports 1-line SD and MMC protocol

SDMMC_HOST_FLAG_4BIT
: host supports 4-line SD and MMC protocol

SDMMC_HOST_FLAG_8BIT
: host supports 8-line MMC protocol

`SDMMC_HOST_FLAG_SPI`
host supports SPI protocol

`SDMMC_HOST_FLAG_DDR`
host supports DDR mode for SD/MMC

`SDMMC_FREQ_DEFAULT`
SD/MMC Default speed (limited by clock divider)

`SDMMC_FREQ_HIGHSPEED`
SD High speed (limited by clock divider)

`SDMMC_FREQ_PROBING`
SD/MMC probing speed

`SDMMC_FREQ_52M`
MMC 52MHz speed

`SDMMC_FREQ_26M`
MMC 26MHz speed

Type Definitions

`typedef` uint32_t `sdmmc_response_t`[4]
SD/MMC command response buffer

3.6.3 Non-volatile storage library

Introduction

Non-volatile storage (NVS) library is designed to store key-value pairs in flash. This sections introduces some concepts used by NVS.

Underlying storage

Currently NVS uses a portion of main flash memory through `spi_flash_{read|write|erase}` APIs. The library uses the all the partitions with `data` type and `nvs` subtype. The application can choose to use the partition with label `nvs` through `nvs_open` API or any of the other partition by specifying its name through `nvs_open_from_part` API.

Future versions of this library may add other storage backends to keep data in another flash chip (SPI or I2C), RTC, FRAM, etc.

注解: if an NVS partition is truncated (for example, when the partition table layout is changed), its contents should be erased. ESP-IDF build system provides a `make erase_flash` target to erase all contents of the

flash chip.

注解: NVS works best for storing many small values, rather than a few large values of type 'string' and 'blob'. If storing large blobs or strings is required, consider using the facilities provided by the FAT filesystem on top of the wear levelling library.

Keys and values

NVS operates on key-value pairs. Keys are ASCII strings, maximum key length is currently 15 characters. Values can have one of the following types:

- integer types: `uint8_t`, `int8_t`, `uint16_t`, `int16_t`, `uint32_t`, `int32_t`, `uint64_t`, `int64_t`
- zero-terminated string
- variable length binary data (blob)

注解: String values are currently limited to 4000 bytes. This includes the null terminator. Blob values are limited to 508000 bytes or (97.6% of the partition size - 4000) bytes whichever is lower.

Additional types, such as `float` and `double` may be added later.

Keys are required to be unique. Writing a value for a key which already exists behaves as follows:

- if the new value is of the same type as old one, value is updated
- if the new value has different data type, an error is returned

Data type check is also performed when reading a value. An error is returned if data type of read operation doesn't match the data type of the value.

Namespaces

To mitigate potential conflicts in key names between different components, NVS assigns each key-value pair to one of namespaces. Namespace names follow the same rules as key names, i.e. 15 character maximum length. Namespace name is specified in the `nvs_open` or `nvs_open_from_part` call. This call returns an opaque handle, which is used in subsequent calls to `nvs_read_*`, `nvs_write_*`, and `nvs_commit` functions. This way, handle is associated with a namespace, and key names will not collide with same names in other namespaces. Please note that the namespaces with same name in different NVS partitions are considered as separate namespaces.

Security, tampering, and robustness

NVS is not directly compatible with the ESP32 flash encryption system. However, data can still be stored in encrypted form if NVS encryption is used together with ESP32 flash encryption. Please refer to *NVS Encryption* for more details.

If NVS encryption is not used, it is possible for anyone with physical access to the flash chip to alter, erase, or add key-value pairs. With NVS encryption enabled, it is not possible to alter or add a key-value pair and get recognized as a valid pair without knowing corresponding NVS encryption keys. However, there is no tamper-resistance against erase operation.

The library does try to recover from conditions when flash memory is in an inconsistent state. In particular, one should be able to power off the device at any point and time and then power it back on. This should not result in loss of data, expect for the new key-value pair if it was being written at the moment of power off. The library should also be able to initialize properly with any random data present in flash memory.

Internals

Log of key-value pairs

NVS stores key-value pairs sequentially, with new key-value pairs being added at the end. When a value of any given key has to be updated, new key-value pair is added at the end of the log and old key-value pair is marked as erased.

Pages and entries

NVS library uses two main entities in its operation: pages and entries. Page is a logical structure which stores a portion of the overall log. Logical page corresponds to one physical sector of flash memory. Pages which are in use have a *sequence number* associated with them. Sequence numbers impose an ordering on pages. Higher sequence numbers correspond to pages which were created later. Each page can be in one of the following states:

Empty/uninitialized Flash storage for the page is empty (all bytes are `0xff`). Page isn't used to store any data at this point and doesn't have a sequence number.

Active Flash storage is initialized, page header has been written to flash, page has a valid sequence number. Page has some empty entries and data can be written there. At most one page can be in this state at any given moment.

Full Flash storage is in a consistent state and is filled with key-value pairs. Writing new key-value pairs into this page is not possible. It is still possible to mark some key-value pairs as erased.

Erasing Non-erased key-value pairs are being moved into another page so that the current page can be erased. This is a transient state, i.e. page should never stay in this state when any API call returns. In case of a sudden power off, move-and-erase process will be completed upon next power on.

Corrupted Page header contains invalid data, and further parsing of page data was canceled. Any items previously written into this page will not be accessible. Corresponding flash sector will not be erased immediately, and will be kept along with sectors in *uninitialized* state for later use. This may be useful for debugging.

Mapping from flash sectors to logical pages doesn' t have any particular order. Library will inspect sequence numbers of pages found in each flash sector and organize pages in a list based on these numbers.

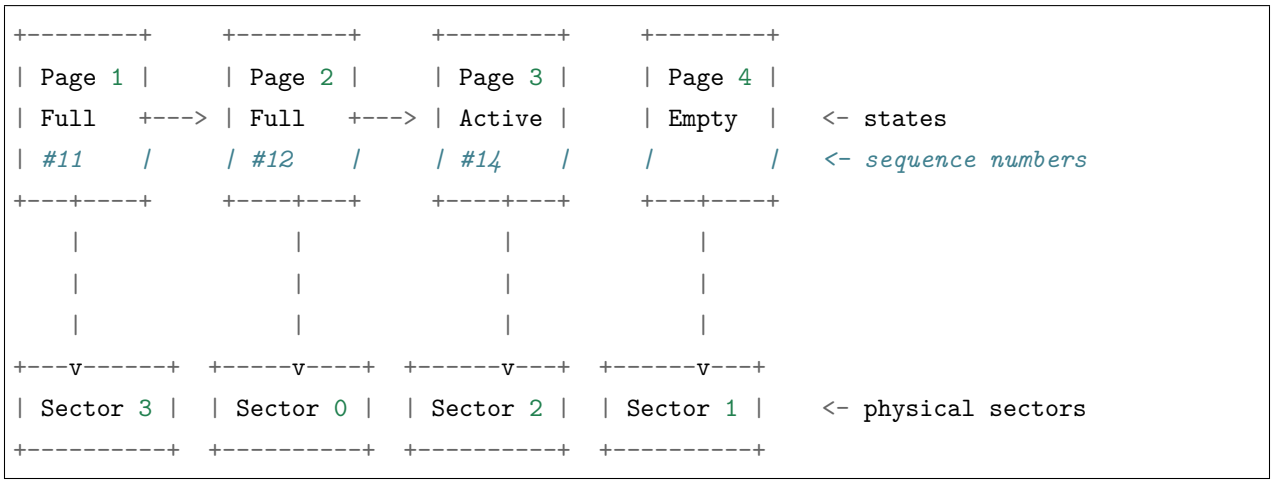

Structure of a page

For now we assume that flash sector size is 4096 bytes and that ESP32 flash encryption hardware operates on 32-byte blocks. It is possible to introduce some settings configurable at compile-time (e.g. via menuconfig) to accommodate flash chips with different sector sizes (although it is not clear if other components in the system, e.g. SPI flash driver and SPI flash cache can support these other sizes).

Page consists of three parts: header, entry state bitmap, and entries themselves. To be compatible with ESP32 flash encryption, entry size is 32 bytes. For integer types, entry holds one key-value pair. For strings and blobs, an entry holds part of key-value pair (more on that in the entry structure description).

The following diagram illustrates page structure. Numbers in parentheses indicate size of each part in bytes.

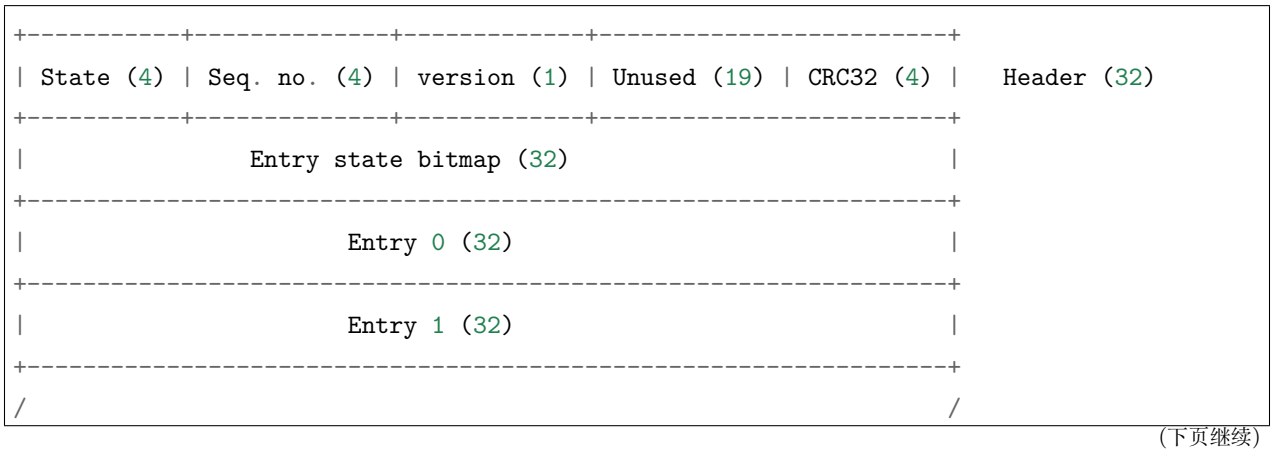

(下页继续)

(续上页)

```
/                                                                 /
+-----------------------------------------------------------------+
|                        Entry 125 (32)                           |
+-----------------------------------------------------------------+
```

Page header and entry state bitmap are always written to flash unencrypted. Entries are encrypted if flash encryption feature of the ESP32 is used.

Page state values are defined in such a way that changing state is possible by writing 0 into some of the bits. Therefore it not necessary to erase the page to change page state, unless that is a change to *erased* state.

The version field in the header reflects NVS format version used. For backward compatibility reasons, it is decremented for every version upgrade starting at 0xff (i.e. 0xff for version-1, 0xfe for version-2 and so on).

CRC32 value in header is calculated over the part which doesn' t include state value (bytes 4 to 28). Unused part is currently filled with `0xff` bytes.

The following sections describe structure of entry state bitmap and entry itself.

Entry and entry state bitmap

Each entry can be in one of the following three states. Each state is represented with two bits in the entry state bitmap. Final four bits in the bitmap (256 - 2 * 126) are unused.

Empty (2' b11) Nothing is written into the specific entry yet. It is in an uninitialized state (all bytes `0xff`).

Written (2' b10) A key-value pair (or part of key-value pair which spans multiple entries) has been written into the entry.

Erased (2' b00) A key-value pair in this entry has been discarded. Contents of this entry will not be parsed anymore.

Structure of entry

For values of primitive types (currently integers from 1 to 8 bytes long), entry holds one key-value pair. For string and blob types, entry holds part of the whole key-value pair. For strings, in case when a key-value pair spans multiple entries, all entries are stored in the same page. Blobs are allowed to span over multiple pages by dividing them into smaller chunks. For the purpose tracking these chunks, an additional fixed length metadata entry is stored called "blob index" entry. Earlier format of blobs are still supported (can be read and modified). However, once the blobs are modified, they are stored using the new format.

```
+--------+----------+----------+----------------+----------+--------------+----------+
| NS (1) | Type (1) | Span (1) | ChunkIndex (1) | CRC32 (4) |    Key (16)    | Data (8) |
```

(下页继续)

(续上页)

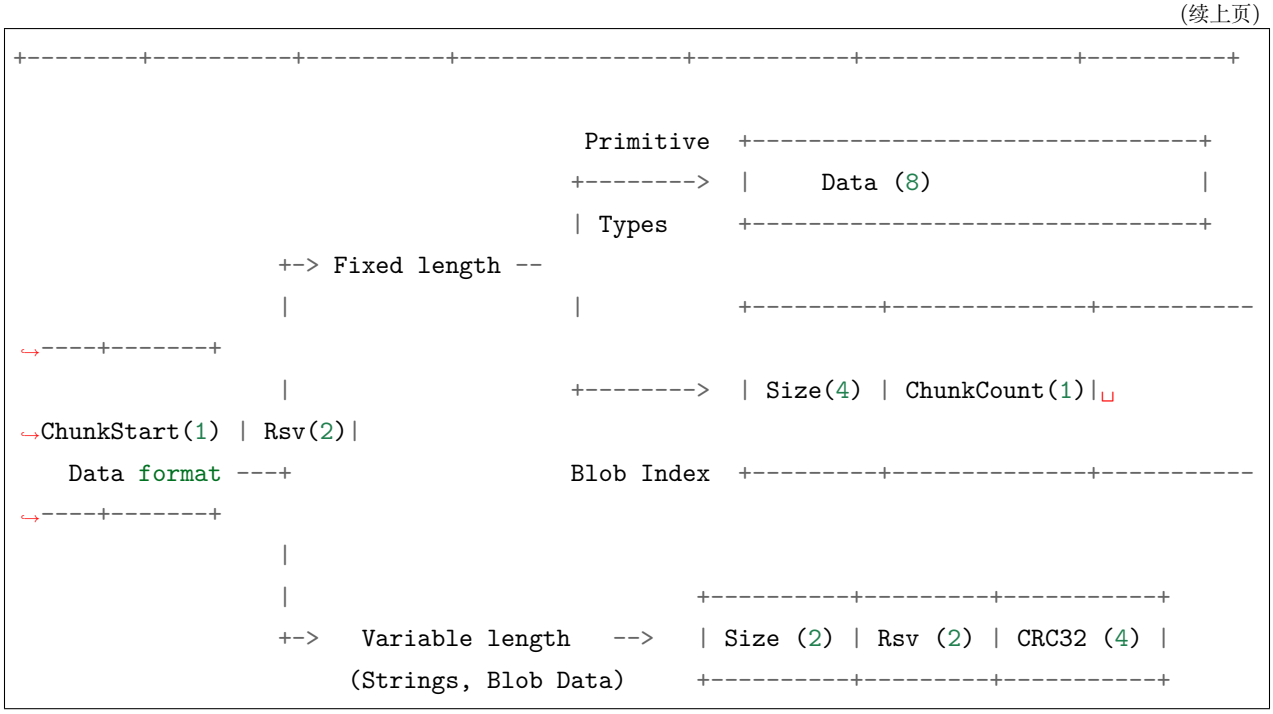

Individual fields in entry structure have the following meanings:

NS Namespace index for this entry. See section on namespaces implementation for explanation of this value.

Type One byte indicating data type of value. See `ItemType` enumeration in `nvs_types.h` for possible values.

Span Number of entries used by this key-value pair. For integer types, this is equal to 1. For strings and blobs this depends on value length.

ChunkIndex Used to store index of the blob-data chunk for blob types. For other types, this should be `0xff`.

CRC32 Checksum calculated over all the bytes in this entry, except for the CRC32 field itself.

Key Zero-terminated ASCII string containing key name. Maximum string length is 15 bytes, excluding zero terminator.

Data For integer types, this field contains the value itself. If the value itself is shorter than 8 bytes it is padded to the right, with unused bytes filled with `0xff`.

For "blob index" entry, these 8 bytes hold the following information about data-chunks:

- **Size** (Only for blob index.) Size, in bytes, of complete blob data.
- **ChunkCount** (Only for blob index.) Total number of blob-data chunks into which the blob was divided during storage.
- **ChunkStart** (Only for blob index.) ChunkIndex of the first blob-data chunk of this blob. Subsequent chunks have chunkIndex incrementely allocated (step of 1).

For string and blob data chunks, these 8 bytes hold additional data about the value, described next:

- **Size** (Only for strings and blobs.) Size, in bytes, of actual data. For strings, this includes zero terminator.
- **CRC32** (Only for strings and blobs.) Checksum calculated over all bytes of data.

Variable length values (strings and blobs) are written into subsequent entries, 32 bytes per entry. *Span* field of the first entry indicates how many entries are used.

Namespaces

As mentioned above, each key-value pair belongs to one of the namespaces. Namespaces identifiers (strings) are stored as keys of key-value pairs in namespace with index 0. Values corresponding to these keys are indexes of these namespaces.

```
+-----------------------------------------+
| NS=0 Type=uint8_t Key="wifi" Value=1    |   Entry describing namespace "wifi"
+-----------------------------------------+
| NS=1 Type=uint32_t Key="channel" Value=6  |   Key "channel" in namespace "wifi"
+-----------------------------------------+
| NS=0 Type=uint8_t Key="pwm" Value=2     |   Entry describing namespace "pwm"
+-----------------------------------------+
| NS=2 Type=uint16_t Key="channel" Value=20 |   Key "channel" in namespace "pwm"
+-----------------------------------------+
```

Item hash list

To reduce the number of reads performed from flash memory, each member of Page class maintains a list of pairs: (item index; item hash). This list makes searches much quicker. Instead of iterating over all entries, reading them from flash one at a time, `Page::findItem` first performs search for item hash in the hash list. This gives the item index within the page, if such an item exists. Due to a hash collision it is possible that a different item will be found. This is handled by falling back to iteration over items in flash.

Each node in hash list contains a 24-bit hash and 8-bit item index. Hash is calculated based on item namespace, key name and ChunkIndex. CRC32 is used for calculation, result is truncated to 24 bits. To reduce overhead of storing 32-bit entries in a linked list, list is implemented as a doubly-linked list of arrays. Each array holds 29 entries, for the total size of 128 bytes, together with linked list pointers and 32-bit count field. Minimal amount of extra RAM useage per page is therefore 128 bytes, maximum is 640 bytes.

NVS Encryption

Data stored in NVS partitions can be encrypted using AES-XTS in the manner similar to one mentioned in disc encryption standard IEEE P1619. For the purpose of encryption, each entry is considered as one *sector* and relative address of the entry (w.r.t. partition-start) is fed to the encryption algorithm as *sector-number*. The keys required for nvs encryption are stored in yet another partition, which is protected using *Flash Encryption*. Therefore, enabling *Flash Encryption* is a prerequisite for NVS encryption.

NVS key partition

An application requiring NVS encryption support needs to be compiled with a key-partition of type *data* and subtype *key*. This partition should be marked as *encrypted*. Refer to *Partition Tables* for more details. The size of the partition should be 4096 bytes (minimum partition size). The structure of this partition is depicted below.

```
+-----------+--------------+-------------+----+
|               XTS encryption key(32)         |
+----------------------------------------------+
|               XTS tweak key (32)             |
+----------------------------------------------+
|                   CRC32(4)                   |
+----------------------------------------------+
```

This partition can be generated using *nvs partition generator* utility and flashed onto the device. Since the partition is marked *encrypted* and *Flash Encryption* is enabled, bootloader will encrypt this partition using flash encryption key on first boot. Alternatively, the keys can be generated after startup using `nvs_flash_generate_keys` API provided by `nvs_flash.h`, which will then write those keys onto the key-partition in encrypted form.

It is possible for an application to use different keys for different NVS partitions and thereby have multiple key-partitions. However, it is a responsibilty of the application to provide correct key-partition/keys for the purpose of encryption/decryption.

Encrypted Read/Write

The same NVS APIs `nvs_read_*` or `nvs_write_*` can be used for reading and writing of encrypted nvs partition as well. However, the APIs for initialising NVS partitions are different. `nvs_flash_secure_init` and `nvs_flash_secure_init_partition` are used for initialising instead of `nvs_flash_init` and `nvs_flash_init_partition` respectively. `nvs_sec_cfg_t` structure required for these APIs can be populated using `nvs_flash_generate_keys` or `nvs_flash_read_security_cfg`.

Applications are expected to follow the following steps in order to perform NVS read/write operations with encryption enabled.

1. Find key partition and NVS data partition using `esp_partition_find*` APIs.
2. Populate `nvs_sec_cfg_t` struct using `nvs_flash_read_security_cfg` or `nvs_flash_generate_keys` APIs.
3. Initialise NVS flash partition using `nvs_flash_secure_init` or `nvs_flash_secure_init_partition` APIs.
4. Open a namespace using `nvs_open` or `nvs_open_from_part` APIs
5. Perform NVS read/write operations using `nvs_read_*` or `nvs_write_*`
6. Deinitialise NVS partition using `nvs_flash_deinit`.

NVS Partition Generator Utility

This utility helps in generating NVS-esque partition binary file which can be flashed separately on a dedicated partition via a flashing utility. Key-value pairs to be flashed onto the partition can be provided via a CSV file. Refer to *NVS Partition Generator Utility* for more details.

Application Example

Two examples are provided in storage directory of ESP-IDF examples:

storage/nvs_rw_value

Demonstrates how to read and write a single integer value using NVS.

The value holds the number of ESP32 module restarts. Since it is written to NVS, the value is preserved between restarts.

Example also shows how to check if read / write operation was successful, or certain value is not initialized in NVS. Diagnostic is provided in plain text to help track program flow and capture any issues on the way.

storage/nvs_rw_blob

Demonstrates how to read and write a single integer value and a blob (binary large object) using NVS to preserve them between ESP32 module restarts.

- value - tracks number of ESP32 module soft and hard restarts.
- blob - contains a table with module run times. The table is read from NVS to dynamically allocated RAM. New run time is added to the table on each manually triggered soft restart and written back to NVS. Triggering is done by pulling down GPIO0.

Example also shows how to implement diagnostics if read / write operation was successful.

API Reference

Header File

- nvs_flash/include/nvs_flash.h

Functions

esp_err_t **nvs_flash_init**(void)

Initialize the default NVS partition.

This API initialises the default NVS partition. The default NVS partition is the one that is labeled "nvs" in the partition table.

Return

- ESP_OK if storage was successfully initialized.
- ESP_ERR_NVS_NO_FREE_PAGES if the NVS storage contains no empty pages (which may happen if NVS partition was truncated)
- ESP_ERR_NOT_FOUND if no partition with label "nvs" is found in the partition table
- one of the error codes from the underlying flash storage driver

esp_err_t **nvs_flash_init_partition**(**const** char *_partition_label_)

Initialize NVS flash storage for the specified partition.

Return

- ESP_OK if storage was successfully initialized.
- ESP_ERR_NVS_NO_FREE_PAGES if the NVS storage contains no empty pages (which may happen if NVS partition was truncated)
- ESP_ERR_NOT_FOUND if specified partition is not found in the partition table
- one of the error codes from the underlying flash storage driver

Parameters

- `partition_label`: Label of the partition. Note that internally a reference to passed value is kept and it should be accessible for future operations

esp_err_t **nvs_flash_deinit**(void)

Deinitialize NVS storage for the default NVS partition.

Default NVS partition is the partition with "nvs" label in the partition table.

Return

- ESP_OK on success (storage was deinitialized)
- ESP_ERR_NVS_NOT_INITIALIZED if the storage was not initialized prior to this call

esp_err_t **nvs_flash_deinit_partition**(**const** char **partition_label*)

Deinitialize NVS storage for the given NVS partition.

Return

- ESP_OK on success
- ESP_ERR_NVS_NOT_INITIALIZED if the storage for given partition was not initialized prior to this call

Parameters

- `partition_label`: Label of the partition

esp_err_t **nvs_flash_erase**(void)

Erase the default NVS partition.

Erases all contents of the default NVS partition (one with label "nvs").

Note If the partition is initialized, this function first de-initializes it. Afterwards, the partition has to be initialized again to be used.

Return

- ESP_OK on success
- ESP_ERR_NOT_FOUND if there is no NVS partition labeled "nvs" in the partition table
- different error in case de-initialization fails (shouldn't happen)

esp_err_t **nvs_flash_erase_partition**(**const** char **part_name*)

Erase specified NVS partition.

Erase all content of a specified NVS partition

Note If the partition is initialized, this function first de-initializes it. Afterwards, the partition has to be initialized again to be used.

Return

- ESP_OK on success
- ESP_ERR_NOT_FOUND if there is no NVS partition with the specified name in the partition table
- different error in case de-initialization fails (shouldn't happen)

Parameters

- `part_name`: Name (label) of the partition which should be erased

esp_err_t **nvs_flash_secure_init**(*nvs_sec_cfg_t* **cfg*)

Initialize the default NVS partition.

This API initialises the default NVS partition. The default NVS partition is the one that is labeled "nvs" in the partition table.

Return

- ESP_OK if storage was successfully initialized.
- ESP_ERR_NVS_NO_FREE_PAGES if the NVS storage contains no empty pages (which may happen if NVS partition was truncated)
- ESP_ERR_NOT_FOUND if no partition with label "nvs" is found in the partition table
- one of the error codes from the underlying flash storage driver

Parameters

- `cfg`: Security configuration (keys) to be used for NVS encryption/decryption. If cfg is NULL, no encryption is used.

esp_err_t **nvs_flash_secure_init_partition**(**const** char **partition_label*, *nvs_sec_cfg_t* **cfg*)

Initialize NVS flash storage for the specified partition.

Return

- ESP_OK if storage was successfully initialized.
- ESP_ERR_NVS_NO_FREE_PAGES if the NVS storage contains no empty pages (which may happen if NVS partition was truncated)
- ESP_ERR_NOT_FOUND if specified partition is not found in the partition table
- one of the error codes from the underlying flash storage driver

Parameters

- `partition_label`: Label of the partition. Note that internally a reference to passed value is kept and it should be accessible for future operations
- `cfg`: Security configuration (keys) to be used for NVS encryption/decryption. If cfg is null, no encryption/decryption is used.

esp_err_t **nvs_flash_generate_keys**(**const** *esp_partition_t* **partition*, *nvs_sec_cfg_t* **cfg*)

Generate and store NVS keys in the provided esp partition.

Return -ESP_OK, if cfg was read successfully; -or error codes from esp_partition_write/erase APIs.

Parameters

- `partition`: Pointer to partition structure obtained using esp_partition_find_first or esp_partition_get. Must be non-NULL.
- `cfg`: Pointer to nvs security configuration structure. Pointer must be non-NULL. Generated keys will be populated in this structure.

esp_err_t **nvs_flash_read_security_cfg**(**const** *esp_partition_t* **partition*, *nvs_sec_cfg_t* **cfg*)

Read NVS security configuration from a partition.

Note Provided parition is assumed to be marked ‘encrypted’.

Return -ESP_OK, if cfg was read successfully; -ESP_ERR_NVS_KEYS_NOT_INITIALIZED, if the partition is not yet written with keys. -ESP_ERR_NVS_CORRUPT_KEY_PART, if the partition containing keys is found to be corrupt -or error codes from esp_partition_read API.

Parameters

- `partition`: Pointer to partition structure obtained using esp_partition_find_first or esp_partition_get. Must be non-NULL.
- `cfg`: Pointer to nvs security configuration structure. Pointer must be non-NULL.

Structures

struct nvs_sec_cfg_t

Key for encryption and decryption.

Public Members

uint8_t **eky**[**NVS_KEY_SIZE**]

XTS encryption and decryption key

uint8_t **tky**[**NVS_KEY_SIZE**]

XTS tweak key

Macros

NVS_KEY_SIZE

Header File

- nvs_flash/include/nvs.h

Functions

esp_err_t **nvs_set_i8**(*nvs_handle handle*, **const** char ***key*, int8_t *value*)

set value for given key

This family of functions set value for the key, given its name. Note that actual storage will not be updated until nvs_commit function is called.

Return

- ESP_OK if value was set successfully
- ESP_ERR_NVS_INVALID_HANDLE if handle has been closed or is NULL
- ESP_ERR_NVS_READ_ONLY if storage handle was opened as read only
- ESP_ERR_NVS_INVALID_NAME if key name doesn't satisfy constraints
- ESP_ERR_NVS_NOT_ENOUGH_SPACE if there is not enough space in the underlying storage to save the value
- ESP_ERR_NVS_REMOVE_FAILED if the value wasn't updated because flash write operation has failed. The value was written however, and update will be finished after re-initialization of nvs, provided that flash operation doesn't fail again.
- ESP_ERR_NVS_VALUE_TOO_LONG if the string value is too long

Parameters

- `handle`: Handle obtained from nvs_open function. Handles that were opened read only cannot be used.
- `key`: Key name. Maximal length is determined by the underlying implementation, but is guaranteed to be at least 15 characters. Shouldn't be empty.
- `value`: The value to set. For strings, the maximum length (including null character) is 4000 bytes.

esp_err_t **nvs_set_u8**(*nvs_handle handle*, **const** char ***key*, uint8_t *value*)

esp_err_t **nvs_set_i16**(*nvs_handle handle*, **const** char ***key*, int16_t *value*)

esp_err_t **nvs_set_u16**(*nvs_handle handle*, **const** char ***key*, uint16_t *value*)

esp_err_t **nvs_set_i32**(*nvs_handle handle*, **const** char ***key*, int32_t *value*)

esp_err_t **nvs_set_u32**(*nvs_handle handle*, **const** char ***key*, uint32_t *value*)

esp_err_t **nvs_set_i64**(*nvs_handle handle*, **const** char ***key*, int64_t *value*)

esp_err_t **nvs_set_u64**(*nvs_handle handle*, **const** char ***key*, uint64_t *value*)

esp_err_t **nvs_set_str**(*nvs_handle handle*, **const** char ***key*, **const** char ***value*)

esp_err_t **nvs_get_i8**(*nvs_handle handle*, **const** char ***key*, int8_t ***out_value*)

get value for given key

These functions retrieve value for the key, given its name. If key does not exist, or the requested variable type doesn't match the type which was used when setting a value, an error is returned.

In case of any error, out_value is not modified.

All functions expect out_value to be a pointer to an already allocated variable of the given type.

```
// Example of using nvs_get_i32:
int32_t max_buffer_size = 4096; // default value
esp_err_t err = nvs_get_i32(my_handle, "max_buffer_size", &max_buffer_size);
assert(err == ESP_OK || err == ESP_ERR_NVS_NOT_FOUND);
// if ESP_ERR_NVS_NOT_FOUND was returned, max_buffer_size will still
// have its default value.
```

Return

- ESP_OK if the value was retrieved successfully
- ESP_ERR_NVS_NOT_FOUND if the requested key doesn't exist
- ESP_ERR_NVS_INVALID_HANDLE if handle has been closed or is NULL
- ESP_ERR_NVS_INVALID_NAME if key name doesn't satisfy constraints
- ESP_ERR_NVS_INVALID_LENGTH if length is not sufficient to store data

Parameters

- `handle`: Handle obtained from nvs_open function.
- `key`: Key name. Maximal length is determined by the underlying implementation, but is guaranteed to be at least 15 characters. Shouldn't be empty.
- `out_value`: Pointer to the output value. May be NULL for nvs_get_str and nvs_get_blob, in this case required length will be returned in length argument.

esp_err_t **nvs_get_u8**(*nvs_handle handle*, **const** char ***key*, uint8_t ***out_value*)

esp_err_t **nvs_get_i16**(*nvs_handle handle*, **const** char ***key*, int16_t ***out_value*)

esp_err_t **nvs_get_u16**(*nvs_handle handle*, **const** char ***key*, uint16_t ***out_value*)

esp_err_t **nvs_get_i32**(*nvs_handle handle*, **const** char ***key*, int32_t ***out_value*)

esp_err_t **nvs_get_u32**(*nvs_handle handle*, **const** char ***key*, uint32_t ***out_value*)

esp_err_t **nvs_get_i64**(*nvs_handle handle*, **const** char ***key*, int64_t ***out_value*)

esp_err_t **nvs_get_u64**(*nvs_handle handle*, **const** char ***key*, uint64_t ***out_value*)

esp_err_t **nvs_get_str**(*nvs_handle handle*, **const** char ***key*, char ***out_value*, size_t ***length*)

get value for given key

These functions retrieve value for the key, given its name. If key does not exist, or the requested variable type doesn't match the type which was used when setting a value, an error is returned.

In case of any error, out_value is not modified.

All functions expect out_value to be a pointer to an already allocated variable of the given type.

nvs_get_str and nvs_get_blob functions support WinAPI-style length queries. To get the size necessary to store the value, call nvs_get_str or nvs_get_blob with zero out_value and non-zero pointer to length. Variable pointed to by length argument will be set to the required length. For nvs_get_str, this length includes the zero terminator. When calling nvs_get_str and nvs_get_blob with non-zero out_value, length has to be non-zero and has to point to the length available in out_value. It is suggested that nvs_get/set_str is used for zero-terminated C strings, and nvs_get/set_blob used for arbitrary data structures.

```
// Example (without error checking) of using nvs_get_str to get a string into␣
↪dynamic array:
size_t required_size;
nvs_get_str(my_handle, "server_name", NULL, &required_size);
char* server_name = malloc(required_size);
nvs_get_str(my_handle, "server_name", server_name, &required_size);

// Example (without error checking) of using nvs_get_blob to get a binary data
into a static array:
uint8_t mac_addr[6];
size_t size = sizeof(mac_addr);
nvs_get_blob(my_handle, "dst_mac_addr", mac_addr, &size);
```

Return

- ESP_OK if the value was retrieved successfully
- ESP_ERR_NVS_NOT_FOUND if the requested key doesn't exist
- ESP_ERR_NVS_INVALID_HANDLE if handle has been closed or is NULL
- ESP_ERR_NVS_INVALID_NAME if key name doesn't satisfy constraints
- ESP_ERR_NVS_INVALID_LENGTH if length is not sufficient to store data

Parameters

- `handle`: Handle obtained from nvs_open function.
- `key`: Key name. Maximal length is determined by the underlying implementation, but is guaranteed to be at least 15 characters. Shouldn't be empty.

- `out_value`: Pointer to the output value. May be NULL for nvs_get_str and nvs_get_blob, in this case required length will be returned in length argument.
- `length`: A non-zero pointer to the variable holding the length of out_value. In case out_value a zero, will be set to the length required to hold the value. In case out_value is not zero, will be set to the actual length of the value written. For nvs_get_str this includes zero terminator.

esp_err_t **nvs_get_blob**(*nvs_handle handle*, **const** char **key*, void **out_value*, size_t **length*)

esp_err_t **nvs_open**(**const** char **name*, *nvs_open_mode open_mode*, *nvs_handle* **out_handle*)

Open non-volatile storage with a given namespace from the default NVS partition.

Multiple internal ESP-IDF and third party application modules can store their key-value pairs in the NVS module. In order to reduce possible conflicts on key names, each module can use its own namespace. The default NVS partition is the one that is labelled "nvs" in the partition table.

Return

- ESP_OK if storage handle was opened successfully
- ESP_ERR_NVS_NOT_INITIALIZED if the storage driver is not initialized
- ESP_ERR_NVS_PART_NOT_FOUND if the partition with label "nvs" is not found
- ESP_ERR_NVS_NOT_FOUND id namespace doesn't exist yet and mode is NVS_READONLY
- ESP_ERR_NVS_INVALID_NAME if namespace name doesn't satisfy constraints
- other error codes from the underlying storage driver

Parameters

- `name`: Namespace name. Maximal length is determined by the underlying implementation, but is guaranteed to be at least 15 characters. Shouldn't be empty.
- `open_mode`: NVS_READWRITE or NVS_READONLY. If NVS_READONLY, will open a handle for reading only. All write requests will be rejected for this handle.
- `out_handle`: If successful (return code is zero), handle will be returned in this argument.

esp_err_t **nvs_open_from_partition**(**const** char **part_name*, **const** char **name*, *nvs_open_mode open_mode*, *nvs_handle* **out_handle*)

Open non-volatile storage with a given namespace from specified partition.

The behaviour is same as nvs_open() API. However this API can operate on a specified NVS partition instead of default NVS partition. Note that the specified partition must be registered with NVS using nvs_flash_init_partition() API.

Return

- ESP_OK if storage handle was opened successfully
- ESP_ERR_NVS_NOT_INITIALIZED if the storage driver is not initialized
- ESP_ERR_NVS_PART_NOT_FOUND if the partition with specified name is not found
- ESP_ERR_NVS_NOT_FOUND id namespace doesn't exist yet and mode is NVS_READONLY
- ESP_ERR_NVS_INVALID_NAME if namespace name doesn't satisfy constraints
- other error codes from the underlying storage driver

Parameters

- `part_name`: Label (name) of the partition of interest for object read/write/erase
- `name`: Namespace name. Maximal length is determined by the underlying implementation, but is guaranteed to be at least 15 characters. Shouldn't be empty.
- `open_mode`: NVS_READWRITE or NVS_READONLY. If NVS_READONLY, will open a handle for reading only. All write requests will be rejected for this handle.
- `out_handle`: If successful (return code is zero), handle will be returned in this argument.

esp_err_t **nvs_set_blob**(*nvs_handle handle*, **const** char ***key*, **const** void ***value*, size_t *length*)

set variable length binary value for given key

This family of functions set value for the key, given its name. Note that actual storage will not be updated until nvs_commit function is called.

Return

- ESP_OK if value was set successfully
- ESP_ERR_NVS_INVALID_HANDLE if handle has been closed or is NULL
- ESP_ERR_NVS_READ_ONLY if storage handle was opened as read only
- ESP_ERR_NVS_INVALID_NAME if key name doesn't satisfy constraints
- ESP_ERR_NVS_NOT_ENOUGH_SPACE if there is not enough space in the underlying storage to save the value
- ESP_ERR_NVS_REMOVE_FAILED if the value wasn't updated because flash write operation has failed. The value was written however, and update will be finished after re-initialization of nvs, provided that flash operation doesn't fail again.
- ESP_ERR_NVS_VALUE_TOO_LONG if the value is too long

Parameters

- `handle`: Handle obtained from nvs_open function. Handles that were opened read only cannot be used.

- `key`: Key name. Maximal length is 15 characters. Shouldn't be empty.
- `value`: The value to set.
- `length`: length of binary value to set, in bytes; Maximum length is 508000 bytes or (97.6% of the partition size - 4000) bytes whichever is lower.

esp_err_t **nvs_erase_key**(*nvs_handle handle*, **const** char **key*)

Erase key-value pair with given key name.

Note that actual storage may not be updated until nvs_commit function is called.

Return

- ESP_OK if erase operation was successful
- ESP_ERR_NVS_INVALID_HANDLE if handle has been closed or is NULL
- ESP_ERR_NVS_READ_ONLY if handle was opened as read only
- ESP_ERR_NVS_NOT_FOUND if the requested key doesn't exist
- other error codes from the underlying storage driver

Parameters

- `handle`: Storage handle obtained with nvs_open. Handles that were opened read only cannot be used.
- `key`: Key name. Maximal length is determined by the underlying implementation, but is guaranteed to be at least 15 characters. Shouldn't be empty.

esp_err_t **nvs_erase_all**(*nvs_handle handle*)

Erase all key-value pairs in a namespace.

Note that actual storage may not be updated until nvs_commit function is called.

Return

- ESP_OK if erase operation was successful
- ESP_ERR_NVS_INVALID_HANDLE if handle has been closed or is NULL
- ESP_ERR_NVS_READ_ONLY if handle was opened as read only
- other error codes from the underlying storage driver

Parameters

- `handle`: Storage handle obtained with nvs_open. Handles that were opened read only cannot be used.

esp_err_t **nvs_commit**(*nvs_handle handle*)

Write any pending changes to non-volatile storage.

After setting any values, nvs_commit() must be called to ensure changes are written to non-volatile storage. Individual implementations may write to storage at other times, but this is not guaranteed.

Return

- ESP_OK if the changes have been written successfully
- ESP_ERR_NVS_INVALID_HANDLE if handle has been closed or is NULL
- other error codes from the underlying storage driver

Parameters

- **handle**: Storage handle obtained with nvs_open. Handles that were opened read only cannot be used.

void **nvs_close**(*nvs_handle handle*)

Close the storage handle and free any allocated resources.

This function should be called for each handle opened with nvs_open once the handle is not in use any more. Closing the handle may not automatically write the changes to nonvolatile storage. This has to be done explicitly using nvs_commit function. Once this function is called on a handle, the handle should no longer be used.

Parameters

- **handle**: Storage handle to close

esp_err_t **nvs_get_stats**(**const** char **part_name*, *nvs_stats_t *nvs_stats*)

Fill structure *nvs_stats_t*. It provides info about used memory the partition.

This function calculates to runtime the number of used entries, free entries, total entries, and amount namespace in partition.

```
// Example of nvs_get_stats() to get the number of used entries and free entries:
nvs_stats_t nvs_stats;
nvs_get_stats(NULL, &nvs_stats);
printf("Count: UsedEntries = (%d), FreeEntries = (%d), AllEntries = (%d)\n",
       nvs_stats.used_entries, nvs_stats.free_entries, nvs_stats.total_entries);
```

Return

- ESP_OK if the changes have been written successfully. Return param nvs_stats will be filled.

- ESP_ERR_NVS_PART_NOT_FOUND if the partition with label "name" is not found. Return param nvs_stats will be filled 0.
- ESP_ERR_NVS_NOT_INITIALIZED if the storage driver is not initialized. Return param nvs_stats will be filled 0.
- ESP_ERR_INVALID_ARG if nvs_stats equal to NULL.
- ESP_ERR_INVALID_STATE if there is page with the status of INVALID. Return param nvs_stats will be filled not with correct values because not all pages will be counted. Counting will be interrupted at the first INVALID page.

Parameters

- `part_name`: Partition name NVS in the partition table. If pass a NULL than will use NVS_DEFAULT_PART_NAME ("nvs").
- `nvs_stats`: Returns filled structure nvs_states_t. It provides info about used memory the partition.

esp_err_t **nvs_get_used_entry_count**(*nvs_handle handle*, size_t **used_entries*)

Calculate all entries in a namespace.

Note that to find out the total number of records occupied by the namespace, add one to the returned value used_entries (if err is equal to ESP_OK). Because the name space entry takes one entry.

```
// Example of nvs_get_used_entry_count() to get amount of all key-value pairs in␣
↪one namespace:
nvs_handle handle;
nvs_open("namespace1", NVS_READWRITE, &handle);
...
size_t used_entries;
size_t total_entries_namespace;
if(nvs_get_used_entry_count(handle, &used_entries) == ESP_OK){
    // the total number of records occupied by the namespace
    total_entries_namespace = used_entries + 1;
}
```

Return

- ESP_OK if the changes have been written successfully. Return param used_entries will be filled valid value.
- ESP_ERR_NVS_NOT_INITIALIZED if the storage driver is not initialized. Return param used_entries will be filled 0.
- ESP_ERR_NVS_INVALID_HANDLE if handle has been closed or is NULL. Return param used_entries will be filled 0.

- ESP_ERR_INVALID_ARG if nvs_stats equal to NULL.
- Other error codes from the underlying storage driver. Return param used_entries will be filled 0.

Parameters

- `handle`: Handle obtained from nvs_open function.
- `used_entries`: Returns amount of used entries from a namespace.

Structures

`struct nvs_stats_t`

Note Info about storage space NVS.

Public Members

size_t **used_entries**
Amount of used entries.

size_t **free_entries**
Amount of free entries.

size_t **total_entries**
Amount all available entries.

size_t **namespace_count**
Amount name space.

Macros

`ESP_ERR_NVS_BASE`
Starting number of error codes

`ESP_ERR_NVS_NOT_INITIALIZED`
The storage driver is not initialized

`ESP_ERR_NVS_NOT_FOUND`
Id namespace doesn’t exist yet and mode is NVS_READONLY

`ESP_ERR_NVS_TYPE_MISMATCH`
The type of set or get operation doesn’t match the type of value stored in NVS

`ESP_ERR_NVS_READ_ONLY`
Storage handle was opened as read only

ESP_ERR_NVS_NOT_ENOUGH_SPACE
: There is not enough space in the underlying storage to save the value

ESP_ERR_NVS_INVALID_NAME
: Namespace name doesn’ t satisfy constraints

ESP_ERR_NVS_INVALID_HANDLE
: Handle has been closed or is NULL

ESP_ERR_NVS_REMOVE_FAILED
: The value wasn’ t updated because flash write operation has failed. The value was written however, and update will be finished after re-initialization of nvs, provided that flash operation doesn’ t fail again.

ESP_ERR_NVS_KEY_TOO_LONG
: Key name is too long

ESP_ERR_NVS_PAGE_FULL
: Internal error; never returned by nvs API functions

ESP_ERR_NVS_INVALID_STATE
: NVS is in an inconsistent state due to a previous error. Call nvs_flash_init and nvs_open again, then retry.

ESP_ERR_NVS_INVALID_LENGTH
: String or blob length is not sufficient to store data

ESP_ERR_NVS_NO_FREE_PAGES
: NVS partition doesn’ t contain any empty pages. This may happen if NVS partition was truncated. Erase the whole partition and call nvs_flash_init again.

ESP_ERR_NVS_VALUE_TOO_LONG
: String or blob length is longer than supported by the implementation

ESP_ERR_NVS_PART_NOT_FOUND
: Partition with specified name is not found in the partition table

ESP_ERR_NVS_NEW_VERSION_FOUND
: NVS partition contains data in new format and cannot be recognized by this version of code

ESP_ERR_NVS_XTS_ENCR_FAILED
: XTS encryption failed while writing NVS entry

ESP_ERR_NVS_XTS_DECR_FAILED
: XTS decryption failed while reading NVS entry

ESP_ERR_NVS_XTS_CFG_FAILED
: XTS configuration setting failed

ESP_ERR_NVS_XTS_CFG_NOT_FOUND
: XTS configuration not found

ESP_ERR_NVS_ENCR_NOT_SUPPORTED
: NVS encryption is not supported in this version

ESP_ERR_NVS_KEYS_NOT_INITIALIZED
: NVS key partition is uninitialized

ESP_ERR_NVS_CORRUPT_KEY_PART
: NVS key partition is corrupt

NVS_DEFAULT_PART_NAME
: Default partition name of the NVS partition in the partition table

Type Definitions

typedef uint32_t nvs_handle
: Opaque pointer type representing non-volatile storage handle

Enumerations

enum nvs_open_mode
: Mode of opening the non-volatile storage.

Values:

NVS_READONLY
: Read only

NVS_READWRITE
: Read and write

enum nvs_type_t
: *Values:*

NVS_TYPE_U8 = 0x01

NVS_TYPE_I8 = 0x11

NVS_TYPE_U16 = 0x02

NVS_TYPE_I16 = 0x12

NVS_TYPE_U32 = 0x04

NVS_TYPE_I32 = 0x14

NVS_TYPE_U64 = 0x08

NVS_TYPE_I64 = 0x18

NVS_TYPE_STR = 0x21

`NVS_TYPE_BLOB` = 0x42

`NVS_TYPE_ANY` = 0xff

3.6.4 NVS Partition Generator Utility

Introduction

nvs_flash/nvs_partition_generator/nvs_partition_gen.py utility is designed to help create a binary file, compatible with NVS architecture defined in *Non-Volatile Storage*, based on user provided key-value pairs in a CSV file. Utility is ideally suited for generating a binary blob, containing data specific to ODM/OEM, which can be flashed externally at the time of device manufacturing. This helps manufacturers set unique value for various parameters for each device, e.g. serial number, while using same application firmware for all devices.

Prerequisites

To use this utility in encryption mode, the following packages need to be installed:

- cryptography package

These dependencies is already captured by including these packages in *requirement.txt* in top level IDF directory.

CSV file format

Each row of the .csv file should have 4 parameters, separated by comma. Below is the description of each of these parameters:

Key Key of the data. Data can later be accessed from an application via this key.

Type Supported values are `file`, `data` and `namespace`.

Encoding Supported values are: `u8`, `i8`, `u16`, `u32`, `i32`, `string`, `hex2bin`, `base64` and `binary`. This specifies how actual data values are encoded in the resultant binary file. Difference between `string` and `binary` encoding is that `string` data is terminated with a NULL character, whereas `binary` data is not.

注解: For `file` type, only `hex2bin`, `base64`, `string` and `binary` is supported as of now.

Value Data value.

注解: Encoding and Value cells for `namespace` field type should be empty. Encoding and Value of `namespace` is fixed and isn't configurable. Any value in these cells are ignored.

注解: First row of the CSV file should always be column header and isn't configurable.

Below is an example dump of such CSV file:

```
key,type,encoding,value     <-- column header
namespace_name,namespace,,  <-- First entry should be of type "namespace"
key1,data,u8,1
key2,file,string,/path/to/file
```

注解: Make sure there are no spaces before and after ',' or at the end of each line in CSV file.

NVS Entry and Namespace association

When a new namespace entry is encountered in the CSV file, each follow-up entries will be part of that namespace, until next namespace entry is found, in which case all the follow-up entries will be part of the new namespace.

注解: First entry in a CSV file should always be `namespace` entry.

Multipage Blob Support

By default, binary blobs are allowed to span over multiple pages and written in the format mentioned in section *Structure of entry*. If older format is intended to be used, the utility provides an option to disable this feature.

Encryption Support

This utility allows you to create an enrypted binary file also. Encryption used is AES-XTS encryption. Refer to *NVS Encryption* for more details.

Running the utility

Usage:

```
python nvs_partition_gen.py [-h] [--input INPUT] [--output OUTPUT]
                            [--size SIZE] [--version {v1,v2}]
```

(下页继续)

(续上页)

```
                        [--keygen {true,false}] [--encrypt {true,false}]
                        [--keyfile KEYFILE] [--outdir OUTDIR]
```

Arguments	Description
–input INPUT	Path to CSV file to parse.
–output OUTPUT	Path to output generated binary file.
–size SIZE	Size of NVS Partition in bytes (must be multiple of 4096)
–version {v1,v2}	Set version. Default: v2
–keygen {true,false}	Generate keys for encryption.
–encrypt {true,false}	Set encryption mode. Default: false
–keyfile KEYFILE	File having key for encryption (Applicable only if encryption mode is true)
–outdir OUTDIR	The output directory to store the files created (Default: current directory)

You can run this utility in two modes:

- Default mode - Binary generated in this mode is an unencrypted binary file.
- Encryption mode - Binary generated in this mode is an encrypted binary file.

In default mode:

Usage:

```
python nvs_partition_gen.py [-h] --input INPUT --output OUTPUT
                        --size SIZE [--version {v1,v2}]
                        [--keygen {true,false}] [--encrypt {true,false}]
                        [--keyfile KEYFILE] [--outdir OUTDIR]
```

You can run the utility using below command:

```
python nvs_partition_gen.py --input sample.csv --output sample.bin --size 0x3000
```

In encryption mode:

Usage:

```
python nvs_partition_gen.py [-h] --input INPUT --output OUTPUT
                        --size SIZE --encrypt {true,false}
                        --keygen {true,false} --keyfile KEYFILE
                        [--version {v1,v2}] [--outdir OUTDIR]
```

You can run the utility using below commands:

- By enabling generation of encryption keys:

```
python nvs_partition_gen.py --input sample.csv --output sample_encrypted.bin --size␣
↪0x3000 --encrypt true --keygen true
```

- By taking encryption keys as an input file. A sample encryption keys binary file is provided with the utility:

```
python nvs_partition_gen.py --input sample.csv --output sample_encrypted.bin --size␣
↪0x3000 --encrypt true --keyfile testdata/sample_encryption_keys.bin
```

- By enabling generation of encryption keys and storing the keys in custom filename:

```
python nvs_partition_gen.py --input sample.csv --output sample_encrypted.bin --size␣
↪0x3000 --encrypt true --keygen true --keyfile encryption_keys_generated.bin
```

注解: If *–keygen* is given with *–keyfile* argument, generated keys will be stored in *–keyfile* file. If *–keygen* argument is absent, *–keyfile* is taken as input file having key for encryption.

To generate **only** *encryption keys with this utility*:

```
python nvs_partition_gen.py --keygen true
```

This creates an *encryption_keys_<timestamp>.bin* file.

注解: This newly created file having encryption keys in *keys/* directory is compatible with NVS key-partition structure. Refer to *NVS key partition* for more details.

You can also provide the format version number (in any of the two modes):

- Multipage Blob Support Enabled (v2)
- Multipage Blob Support Disabled (v1)

Multipage Blob Support Enabled (v2):

You can run the utility in this format by setting the version parameter to v2, as shown below. A sample CSV file is provided with the utility:

```
python nvs_partition_gen.py --input sample_multipage_blob.csv --output partition_
↪multipage_blob.bin --size 0x4000 --version v2
```

Multipage Blob Support Disabled (v1):

You can run the utility in this format by setting the version parameter to v1, as shown below. A sample CSV file is provided with the utility:

```
python nvs_partition_gen.py --input sample_singlepage_blob.csv --output partition_single_
↪page.bin --size 0x3000 --version v1
```

注解: *Minimum NVS Partition Size needed is 0x3000 bytes.*

注解: *When flashing the binary onto the device, make sure it is consistent with the application' s sdkconfig.*

Caveats

- Utility doesn' t check for duplicate keys and will write data pertaining to both keys. User needs to make sure keys are distinct.
- Once a new page is created, no data will be written in the space left in previous page. Fields in the CSV file need to be ordered in such a way so as to optimize memory.
- 64-bit datatype is not yet supported.

3.6.5 Virtual filesystem component

Overview

Virtual filesystem (VFS) component provides a unified interface for drivers which can perform operations on file-like objects. This can be a real filesystems (FAT, SPIFFS, etc.), or device drivers which exposes file-like interface.

This component allows C library functions, such as fopen and fprintf, to work with FS drivers. At high level, each FS driver is associated with some path prefix. When one of C library functions needs to open a file, VFS component searches for the FS driver associated with the file' s path, and forwards the call to that driver. VFS also forwards read, write, and other calls for the given file to the same FS driver.

For example, one can register a FAT filesystem driver with `/fat` prefix, and call `fopen("/fat/file.txt", "w")`. VFS component will then call `open` function of FAT driver and pass `/file.txt` argument to it (and appropriate mode flags). All subsequent calls to C library functions for the returned `FILE*` stream will also be forwarded to the FAT driver.

FS registration

To register an FS driver, application needs to define in instance of *esp_vfs_t* structure and populate it with function pointers to FS APIs:

```
esp_vfs_t myfs = {
    .flags = ESP_VFS_FLAG_DEFAULT,
    .write = &myfs_write,
    .open = &myfs_open,
    .fstat = &myfs_fstat,
    .close = &myfs_close,
    .read = &myfs_read,
};

ESP_ERROR_CHECK(esp_vfs_register("/data", &myfs, NULL));
```

Depending on the way FS driver declares its APIs, either `read`, `write`, etc., or `read_p`, `write_p`, etc. should be used.

Case 1: API functions are declared without an extra context pointer (FS driver is a singleton):

```
ssize_t myfs_write(int fd, const void * data, size_t size);

// In definition of esp_vfs_t:
    .flags = ESP_VFS_FLAG_DEFAULT,
    .write = &myfs_write,
// ... other members initialized

// When registering FS, context pointer (third argument) is NULL:
ESP_ERROR_CHECK(esp_vfs_register("/data", &myfs, NULL));
```

Case 2: API functions are declared with an extra context pointer (FS driver supports multiple instances):

```
ssize_t myfs_write(myfs_t* fs, int fd, const void * data, size_t size);

// In definition of esp_vfs_t:
    .flags = ESP_VFS_FLAG_CONTEXT_PTR,
    .write_p = &myfs_write,
// ... other members initialized

// When registering FS, pass the FS context pointer into the third argument
// (hypothetical myfs_mount function is used for illustrative purposes)
myfs_t* myfs_inst1 = myfs_mount(partition1->offset, partition1->size);
```

(下页继续)

(续上页)

```
ESP_ERROR_CHECK(esp_vfs_register("/data1", &myfs, myfs_inst1));

// Can register another instance:
myfs_t* myfs_inst2 = myfs_mount(partition2->offset, partition2->size);
ESP_ERROR_CHECK(esp_vfs_register("/data2", &myfs, myfs_inst2));
```

Synchronous input/output multiplexing

If you want to use synchronous input/output multiplexing by `select()` then you need to register the VFS with `start_select()` and `end_select()` functions similarly to the following example:

```
// In definition of esp_vfs_t:
    .start_select = &uart_start_select,
    .end_select = &uart_end_select,
// ... other members initialized
```

`start_select()` is called for setting up the environment for detection of read/write/error conditions on file descriptors belonging to the given VFS driver.

`end_select()` is called to stop/deinitialize/free the environment which was setup by `start_select()`.

注解: `end_select()` might be called without a previous `start_select()` call in some rare circumstances. `end_select()` should fail gracefully if this is the case.

Please refer to the reference implementation for the UART peripheral in vfs/vfs_uart.c and most particularly to functions *`esp_vfs_dev_uart_register()`*, `uart_start_select()` and `uart_end_select()`.

Examples demonstrating the use of `select()` with VFS file descriptors are the peripherals/uart_select and the system/select examples.

If `select()` is used for socket file descriptors only then one can enable the `CONFIG_USE_ONLY_LWIP_SELECT` option which can reduce the code size and improve performance.

注解: Don't change the socket driver during an active `select()` call or you might experience some undefined behavior.

Paths

Each registered FS has a path prefix associated with it. This prefix may be considered a "mount point" of this partition.

In case when mount points are nested, the mount point with the longest matching path prefix is used when opening the file. For instance, suppose that the following filesystems are registered in VFS:

- FS 1 on /data
- FS 2 on /data/static

Then:

- FS 1 will be used when opening a file called `/data/log.txt`
- FS 2 will be used when opening a file called `/data/static/index.html`
- Even if `/index.html"` doesn't exist in FS 2, FS 1 will *not* be searched for `/static/index.html`.

As a general rule, mount point names must start with the path separator (`/`) and must contain at least one character after path separator. However an empty mount point name is also supported, and may be used in cases when application needs to provide "fallback" filesystem, or override VFS functionality altogether. Such filesystem will be used if no prefix matches the path given.

VFS does not handle dots (`.`) in path names in any special way. VFS does not treat `..` as a reference to the parent directory. I.e. in the above example, using a path `/data/static/../log.txt` will not result in a call to FS 1 to open `/log.txt`. Specific FS drivers (such as FATFS) may handle dots in file names differently.

When opening files, FS driver will only be given relative path to files. For example:

- `myfs` driver is registered with `/data` as path prefix
- and application calls `fopen("/data/config.json", ...)`
- then VFS component will call `myfs_open("/config.json", ...)`.
- `myfs` driver will open `/config.json` file

VFS doesn't impose a limit on total file path length, but it does limit FS path prefix to `ESP_VFS_PATH_MAX` characters. Individual FS drivers may have their own filename length limitations.

File descriptors

File descriptors are small positive integers from `0` to `FD_SETSIZE - 1` where `FD_SETSIZE` is defined in newlib's `sys/types.h`. The largest file descriptors (configured by `CONFIG_LWIP_MAX_SOCKETS`) are reserved for sockets. The VFS component contains a lookup-table called `s_fd_table` for mapping global file descriptors to VFS driver indexes registered in the `s_vfs` array.

Standard IO streams (stdin, stdout, stderr)

If "UART for console output" menuconfig option is not set to "None", then `stdin`, `stdout`, and `stderr` are configured to read from, and write to, a UART. It is possible to use UART0 or UART1 for standard IO. By default, UART0 is used, with 115200 baud rate, TX pin is GPIO1 and RX pin is GPIO3. These parameters can be changed in menuconfig.

Writing to `stdout` or `stderr` will send characters to the UART transmit FIFO. Reading from `stdin` will retrieve characters from the UART receive FIFO.

By default, VFS uses simple functions for reading from and writing to UART. Writes busy-wait until all data is put into UART FIFO, and reads are non-blocking, returning only the data present in the FIFO. Because of this non-blocking read behavior, higher level C library calls, such as `fscanf("%d\n", &var);` may not have desired results.

Applications which use UART driver may instruct VFS to use the driver's interrupt driven, blocking read and write functions instead. This can be done using a call to `esp_vfs_dev_uart_use_driver` function. It is also possible to revert to the basic non-blocking functions using a call to `esp_vfs_dev_uart_use_nonblocking`.

VFS also provides optional newline conversion feature for input and output. Internally, most applications send and receive lines terminated by LF ('' n' ') character. Different terminal programs may require different line termination, such as CR or CRLF. Applications can configure this separately for input and output either via menuconfig, or by calls to `esp_vfs_dev_uart_set_rx_line_endings` and `esp_vfs_dev_uart_set_tx_line_endings` functions.

Standard streams and FreeRTOS tasks

`FILE` objects for `stdin`, `stdout`, and `stderr` are shared between all FreeRTOS tasks, but the pointers to these objects are are stored in per-task `struct _reent`. The following code:

```
fprintf(stderr, "42\n");
```

actually is translated to to this (by the preprocessor):

```
fprintf(__getreent()->_stderr, "42\n");
```

where the `__getreent()` function returns a per-task pointer to `struct _reent` (newlib/include/sys/reent.h#L370-L417). This structure is allocated on the TCB of each task. When a task is initialized, `_stdin`, `_stdout` and `_stderr` members of `struct _reent` are set to the values of `_stdin`, `_stdout` and `_stderr` of `_GLOBAL_REENT` (i.e. the structure which is used before FreeRTOS is started).

Such a design has the following consequences:

- It is possible to set `stdin`, `stdout`, and `stderr` for any given task without affecting other tasks, e.g. by doing `stdin = fopen("/dev/uart/1", "r")`.
- Closing default `stdin`, `stdout`, or `stderr` using `fclose` will close the `FILE` stream object —this will affect all other tasks.
- To change the default `stdin`, `stdout`, `stderr` streams for new tasks, modify `_GLOBAL_REENT->_stdin` (`_stdout`, `_stderr`) before creating the task.

Application Example

Instructions

API Reference

Header File

- vfs/include/esp_vfs.h

Functions

ssize_t **esp_vfs_write**(**struct** _reent *r, int *fd*, **const** void *data, size_t *size*)

These functions are to be used in newlib syscall table. They will be called by newlib when it needs to use any of the syscalls.

off_t **esp_vfs_lseek**(**struct** _reent *r, int *fd*, off_t *size*, int *mode*)

ssize_t **esp_vfs_read**(**struct** _reent *r, int *fd*, void *dst, size_t *size*)

int **esp_vfs_open**(**struct** _reent *r, **const** char *path, int *flags*, int *mode*)

int **esp_vfs_close**(**struct** _reent *r, int *fd*)

int **esp_vfs_fstat**(**struct** _reent *r, int *fd*, **struct** stat *st*)

int **esp_vfs_stat**(**struct** _reent *r, **const** char *path, **struct** stat *st*)

int **esp_vfs_link**(**struct** _reent *r, **const** char *n1, **const** char *n2*)

int **esp_vfs_unlink**(**struct** _reent *r, **const** char *path*)

int **esp_vfs_rename**(**struct** _reent *r, **const** char *src, **const** char *dst*)

int **esp_vfs_utime**(**const** char *path, **const struct** utimbuf *times*)

esp_err_t **esp_vfs_register**(**const** char *base_path, **const** *esp_vfs_t* *vfs, void *ctx*)

Register a virtual filesystem for given path prefix.

Return ESP_OK if successful, ESP_ERR_NO_MEM if too many VFSes are registered.

Parameters

- `base_path`: file path prefix associated with the filesystem. Must be a zero-terminated C string, up to ESP_VFS_PATH_MAX characters long, and at least 2 characters long. Name must start with a "/" and must not end with "/" . For example, "/data" or "/dev/spi" are valid. These VFSes would then be called to handle file paths such as "/data/myfile.txt" or "/dev/spi/0" .

- `vfs`: Pointer to *esp_vfs_t*, a structure which maps syscalls to the filesystem driver functions. VFS component doesn't assume ownership of this pointer.
- `ctx`: If vfs->flags has ESP_VFS_FLAG_CONTEXT_PTR set, a pointer which should be passed to VFS functions. Otherwise, NULL.

esp_err_t **esp_vfs_register_fd_range**(const *esp_vfs_t* **vfs*, void **ctx*, int *min_fd*, int *max_fd*)

Special case function for registering a VFS that uses a method other than open() to open new file descriptors from the interval <min_fd; max_fd).

This is a special-purpose function intended for registering LWIP sockets to VFS.

Return ESP_OK if successful, ESP_ERR_NO_MEM if too many VFSes are registered, ESP_ERR_INVALID_ARG if the file descriptor boundaries are incorrect.

Parameters

- `vfs`: Pointer to *esp_vfs_t*. Meaning is the same as for esp_vfs_register().
- `ctx`: Pointer to context structure. Meaning is the same as for esp_vfs_register().
- `min_fd`: The smallest file descriptor this VFS will use.
- `max_fd`: Upper boundary for file descriptors this VFS will use (the biggest file descriptor plus one).

esp_err_t **esp_vfs_register_with_id**(const *esp_vfs_t* **vfs*, void **ctx*, *esp_vfs_id_t* **vfs_id*)

Special case function for registering a VFS that uses a method other than open() to open new file descriptors. In comparison with esp_vfs_register_fd_range, this function doesn't pre-registers an interval of file descriptors. File descriptors can be registered later, by using esp_vfs_register_fd.

Return ESP_OK if successful, ESP_ERR_NO_MEM if too many VFSes are registered, ESP_ERR_INVALID_ARG if the file descriptor boundaries are incorrect.

Parameters

- `vfs`: Pointer to *esp_vfs_t*. Meaning is the same as for esp_vfs_register().
- `ctx`: Pointer to context structure. Meaning is the same as for esp_vfs_register().
- `vfs_id`: Here will be written the VFS ID which can be passed to esp_vfs_register_fd for registering file descriptors.

esp_err_t **esp_vfs_unregister**(const char **base_path*)

Unregister a virtual filesystem for given path prefix

Return ESP_OK if successful, ESP_ERR_INVALID_STATE if VFS for given prefix hasn't been registered

Parameters

- `base_path`: file prefix previously used in esp_vfs_register call

esp_err_t **esp_vfs_register_fd**(*esp_vfs_id_t vfs_id*, int *fd)

Special function for registering another file descriptor for a VFS registered by esp_vfs_register_with_id.

Return ESP_OK if the registration is successful, ESP_ERR_NO_MEM if too many file descriptors are registered, ESP_ERR_INVALID_ARG if the arguments are incorrect.

Parameters

- `vfs_id`: VFS identificator returned by esp_vfs_register_with_id.
- `fd`: The registered file descriptor will be written to this address.

esp_err_t **esp_vfs_unregister_fd**(*esp_vfs_id_t vfs_id*, int *fd*)

Special function for unregistering a file descriptor belonging to a VFS registered by esp_vfs_register_with_id.

Return ESP_OK if the registration is successful, ESP_ERR_INVALID_ARG if the arguments are incorrect.

Parameters

- `vfs_id`: VFS identificator returned by esp_vfs_register_with_id.
- `fd`: File descriptor which should be unregistered.

int **esp_vfs_select**(int *nfds*, fd_set **readfds*, fd_set **writefds*, fd_set **errorfds*, **struct** timeval **timeout*)

Synchronous I/O multiplexing which implements the functionality of POSIX select() for VFS.

Return The number of descriptors set in the descriptor sets, or -1 when an error (specified by errno) have occurred.

Parameters

- `nfds`: Specifies the range of descriptors which should be checked. The first nfds descriptors will be checked in each set.
- `readfds`: If not NULL, then points to a descriptor set that on input specifies which descriptors should be checked for being ready to read, and on output indicates which descriptors are ready to read.
- `writefds`: If not NULL, then points to a descriptor set that on input specifies which descriptors should be checked for being ready to write, and on output indicates which descriptors are ready to write.

- `errorfds`: If not NULL, then points to a descriptor set that on input specifies which descriptors should be checked for error conditions, and on output indicates which descriptors have error conditions.
- `timeout`: If not NULL, then points to timeval structure which specifies the time period after which the functions should time-out and return. If it is NULL, then the function will not time-out.

void **esp_vfs_select_triggered**(*SemaphoreHandle_t* **signal_sem*)

Notification from a VFS driver about a read/write/error condition.

This function is called when the VFS driver detects a read/write/error condition as it was requested by the previous call to start_select.

Parameters

- `signal_sem`: semaphore handle which was passed to the driver by the start_select call

void **esp_vfs_select_triggered_isr**(*SemaphoreHandle_t* **signal_sem*, BaseType_t **woken*)

Notification from a VFS driver about a read/write/error condition (ISR version)

This function is called when the VFS driver detects a read/write/error condition as it was requested by the previous call to start_select.

Parameters

- `signal_sem`: semaphore handle which was passed to the driver by the start_select call
- `woken`: is set to pdTRUE if the function wakes up a task with higher priority

int **esp_vfs_poll**(**struct** pollfd **fds*, nfds_t *nfds*, int *timeout*)

Implements the VFS layer for synchronous I/O multiplexing by poll()

The implementation is based on esp_vfs_select. The parameters and return values are compatible with POSIX poll().

Return A positive return value indicates the number of file descriptors that have been selected. The 0 return value indicates a timed-out poll. -1 is return on failure and errno is set accordingly.

Parameters

- `fds`: Pointer to the array containing file descriptors and events poll() should consider.
- `nfds`: Number of items in the array fds.
- `timeout`: Poll() should wait at least timeout milliseconds. If the value is 0 then it should return immediately. If the value is -1 then it should wait (block) until the event occurs.

Structures

struct esp_vfs_t

VFS definition structure.

This structure should be filled with pointers to corresponding FS driver functions.

VFS component will translate all FDs so that the filesystem implementation sees them starting at zero. The caller sees a global FD which is prefixed with an pre-filesystem-implementation.

Some FS implementations expect some state (e.g. pointer to some structure) to be passed in as a first argument. For these implementations, populate the members of this structure which have _p suffix, set flags member to ESP_VFS_FLAG_CONTEXT_PTR and provide the context pointer to esp_vfs_register function. If the implementation doesn't use this extra argument, populate the members without _p suffix and set flags member to ESP_VFS_FLAG_DEFAULT.

If the FS driver doesn't provide some of the functions, set corresponding members to NULL.

Public Members

int **flags**

ESP_VFS_FLAG_CONTEXT_PTR or ESP_VFS_FLAG_DEFAULT

esp_err_t (***start_select**)(int nfds, fd_set *readfds, fd_set *writefds, fd_set *exceptfds, *SemaphoreHandle_t* *signal_sem)

start_select is called for setting up synchronous I/O multiplexing of the desired file descriptors in the given VFS

int (***socket_select**)(int nfds, fd_set *readfds, fd_set *writefds, fd_set *errorfds, **struct** timeval *timeout)

socket select function for socket FDs with the functionality of POSIX select(); this should be set only for the socket VFS

void (***stop_socket_select**)()

called by VFS to interrupt the socket_select call when select is activated from a non-socket VFS driver; set only for the socket driver

void (***stop_socket_select_isr**)(BaseType_t *woken)

stop_socket_select which can be called from ISR; set only for the socket driver

void *(***get_socket_select_semaphore**)()

end_select is called to stop the I/O multiplexing and deinitialize the environment created by start_select for the given VFS

void (***end_select**)()

get_socket_select_semaphore returns semaphore allocated in the socket driver; set only for the socket driver

Macros

MAX_FDS

Maximum number of (global) file descriptors.

ESP_VFS_PATH_MAX

Maximum length of path prefix (not including zero terminator)

ESP_VFS_FLAG_DEFAULT

Default value of flags member in *esp_vfs_t* structure.

ESP_VFS_FLAG_CONTEXT_PTR

Flag which indicates that FS needs extra context pointer in syscalls.

Type Definitions

typedef int **esp_vfs_id_t**

Header File

- vfs/include/esp_vfs_dev.h

Functions

void **esp_vfs_dev_uart_register**()

add /dev/uart virtual filesystem driver

This function is called from startup code to enable serial output

void **esp_vfs_dev_uart_set_rx_line_endings**(*esp_line_endings_t mode*)

Set the line endings expected to be received on UART.

This specifies the conversion between line endings received on UART and newlines (' ' , LF) passed into stdin:

- ESP_LINE_ENDINGS_CRLF: convert CRLF to LF
- ESP_LINE_ENDINGS_CR: convert CR to LF
- ESP_LINE_ENDINGS_LF: no modification

Note this function is not thread safe w.r.t. reading from UART

Parameters

- `mode`: line endings expected on UART

void **esp_vfs_dev_uart_set_tx_line_endings**(*esp_line_endings_t mode*)

Set the line endings to sent to UART.

This specifies the conversion between newlines (' ' , LF) on stdout and line endings sent over UART:

- ESP_LINE_ENDINGS_CRLF: convert LF to CRLF
- ESP_LINE_ENDINGS_CR: convert LF to CR
- ESP_LINE_ENDINGS_LF: no modification

Note this function is not thread safe w.r.t. writing to UART

Parameters

- `mode`: line endings to send to UART

int **esp_vfs_dev_uart_port_set_rx_line_endings**(int *uart_num*, *esp_line_endings_t mode*)

Set the line endings expected to be received on specified UART.

This specifies the conversion between line endings received on UART and newlines (' ' , LF) passed into stdin:

- ESP_LINE_ENDINGS_CRLF: convert CRLF to LF
- ESP_LINE_ENDINGS_CR: convert CR to LF
- ESP_LINE_ENDINGS_LF: no modification

Note this function is not thread safe w.r.t. reading from UART

Return 0 if successed, or -1 when an error (specified by errno) have occurred.

Parameters

- `uart_num`: the UART number
- `mode`: line endings to send to UART

int **esp_vfs_dev_uart_port_set_tx_line_endings**(int *uart_num*, *esp_line_endings_t mode*)

Set the line endings to sent to specified UART.

This specifies the conversion between newlines (' ' , LF) on stdout and line endings sent over UART:

- ESP_LINE_ENDINGS_CRLF: convert LF to CRLF
- ESP_LINE_ENDINGS_CR: convert LF to CR
- ESP_LINE_ENDINGS_LF: no modification

Note this function is not thread safe w.r.t. writing to UART

Return 0 if successed, or -1 when an error (specified by errno) have occurred.

Parameters

- `uart_num`: the UART number
- `mode`: line endings to send to UART

void **esp_vfs_dev_uart_use_nonblocking**(int *uart_num*)

set VFS to use simple functions for reading and writing UART Read is non-blocking, write is busy waiting until TX FIFO has enough space. These functions are used by default.

Parameters

- `uart_num`: UART peripheral number

void **esp_vfs_dev_uart_use_driver**(int *uart_num*)

set VFS to use UART driver for reading and writing

Note application must configure UART driver before calling these functions With these functions, read and write are blocking and interrupt-driven.

Parameters

- `uart_num`: UART peripheral number

Enumerations

enum esp_line_endings_t

Line ending settings.

Values:

`ESP_LINE_ENDINGS_CRLF`

CR + LF.

`ESP_LINE_ENDINGS_CR`

CR.

`ESP_LINE_ENDINGS_LF`

LF.

3.6.6 FAT Filesystem Support

ESP-IDF uses FatFs library to work with FAT filesystems. FatFs library resides in `fatfs` component. Although it can be used directly, many of its features can be accessed via VFS using C standard library and POSIX APIs.

Additionally, FatFs has been modified to support run-time pluggable disk IO layer. This allows mapping of FatFs drives to physical disks at run-time.

Using FatFs with VFS

fatfs/src/esp_vfs_fat.h header file defines functions to connect FatFs with VFS. *esp_vfs_fat_register()* function allocates a `FATFS` structure, and registers a given path prefix in VFS. Subsequent operations on files starting with this prefix are forwarded to FatFs APIs. *esp_vfs_fat_unregister_path()* function deletes the registration with VFS, and frees the `FATFS` structure.

Most applications will use the following flow when working with `esp_vfs_fat_` functions:

1. Call *esp_vfs_fat_register()*, specifying path prefix where the filesystem has to be mounted (e.g. `"/sdcard"`, `"/spiflash"`), FatFs drive number, and a variable which will receive a pointer to `FATFS` structure.
2. Call *ff_diskio_register()* function to register disk IO driver for the drive number used in step 1.
3. Call FatFs `f_mount` function (and optionally `f_fdisk`, `f_mkfs`) to mount the filesystem using the same drive number which was passed to *esp_vfs_fat_register()*. See *FatFs documentation for more details <http://www.elm-chan.org/fsw/ff/doc/mount.html>*.
4. Call POSIX and C standard library functions to open, read, write, erase, copy files, etc. Use paths starting with the prefix passed to *esp_vfs_register()* (such as `"/sdcard/hello.txt"`).
5. Optionally, call FatFs library functions directly. Use paths without a VFS prefix in this case (`"/hello.txt"`).
6. Close all open files.
7. Call FatFs `f_mount` function for the same drive number, with NULL `FATFS*` argument, to unmount the filesystem.
8. Call FatFs *ff_diskio_register()* with NULL `ff_diskio_impl_t*` argument and the same drive number.
9. Call *esp_vfs_fat_unregister_path()* with the path where the file system is mounted to remove FatFs from VFS, and free the `FATFS` structure allocated on step 1.

Convenience functions, `esp_vfs_fat_sdmmc_mount` and `esp_vfs_fat_sdmmc_unmount`, which wrap these steps and also handle SD card initialization, are described in the next section.

esp_err_t **esp_vfs_fat_register**(**const** char **base_path*, **const** char **fat_drive*, size_t *max_files*, FATFS ***out_fs*)

Register FATFS with VFS component.

This function registers given FAT drive in VFS, at the specified base path. If only one drive is used, fat_drive argument can be an empty string. Refer to FATFS library documentation on how to specify FAT drive. This function also allocates FATFS structure which should be used for f_mount call.

Note This function doesn't mount the drive into FATFS, it just connects POSIX and C standard library IO function with FATFS. You need to mount desired drive into FATFS separately.

Return

- ESP_OK on success
- ESP_ERR_INVALID_STATE if esp_vfs_fat_register was already called
- ESP_ERR_NO_MEM if not enough memory or too many VFSes already registered

Parameters

- `base_path`: path prefix where FATFS should be registered
- `fat_drive`: FATFS drive specification; if only one drive is used, can be an empty string
- `max_files`: maximum number of files which can be open at the same time
- `out_fs`: pointer to FATFS structure which can be used for FATFS f_mount call is returned via this argument.

esp_err_t **esp_vfs_fat_unregister_path**(**const** char **base_path*)

Un-register FATFS from VFS.

Note FATFS structure returned by esp_vfs_fat_register is destroyed after this call. Make sure to call f_mount function to unmount it before calling esp_vfs_fat_unregister_ctx. Difference between this function and the one above is that this one will release the correct drive, while the one above will release the last registered one

Return

- ESP_OK on success
- ESP_ERR_INVALID_STATE if FATFS is not registered in VFS

Parameters

- `base_path`: path prefix where FATFS is registered. This is the same used when esp_vfs_fat_register was called

Using FatFs with VFS and SD cards

fatfs/src/esp_vfs_fat.h header file also provides a convenience function to perform steps 1–3 and 7–9, and also handle SD card initialization: *esp_vfs_fat_sdmmc_mount()*. This function does only limited error handling. Developers are encouraged to look at its source code and incorporate more advanced versions into production applications. *esp_vfs_fat_sdmmc_unmount()* function unmounts the filesystem and releases resources acquired by *esp_vfs_fat_sdmmc_mount()*.

esp_err_t **esp_vfs_fat_sdmmc_mount**(**const** char **base_path*, **const** *sdmmc_host_t* **host_config*, **const** void **slot_config*, **const** *esp_vfs_fat_mount_config_t* **mount_config*, *sdmmc_card_t* ***out_card*)

Convenience function to get FAT filesystem on SD card registered in VFS.

This is an all-in-one function which does the following:

- initializes SDMMC driver or SPI driver with configuration in host_config

- initializes SD card with configuration in slot_config
- mounts FAT partition on SD card using FATFS library, with configuration in mount_config
- registers FATFS library with VFS, with prefix given by base_prefix variable

This function is intended to make example code more compact. For real world applications, developers should implement the logic of probing SD card, locating and mounting partition, and registering FATFS in VFS, with proper error checking and handling of exceptional conditions.

Return

- ESP_OK on success
- ESP_ERR_INVALID_STATE if esp_vfs_fat_sdmmc_mount was already called
- ESP_ERR_NO_MEM if memory can not be allocated
- ESP_FAIL if partition can not be mounted
- other error codes from SDMMC or SPI drivers, SDMMC protocol, or FATFS drivers

Parameters

- `base_path`: path where partition should be registered (e.g. "/sdcard")
- `host_config`: Pointer to structure describing SDMMC host. When using SDMMC peripheral, this structure can be initialized using SDMMC_HOST_DEFAULT() macro. When using SPI peripheral, this structure can be initialized using SDSPI_HOST_DEFAULT() macro.
- `slot_config`: Pointer to structure with slot configuration. For SDMMC peripheral, pass a pointer to *sdmmc_slot_config_t* structure initialized using SDMMC_SLOT_CONFIG_DEFAULT. For SPI peripheral, pass a pointer to *sdspi_slot_config_t* structure initialized using SDSPI_SLOT_CONFIG_DEFAULT.
- `mount_config`: pointer to structure with extra parameters for mounting FATFS
- `out_card`: if not NULL, pointer to the card information structure will be returned via this argument

struct esp_vfs_fat_mount_config_t

Configuration arguments for esp_vfs_fat_sdmmc_mount and esp_vfs_fat_spiflash_mount functions.

Public Members

bool **format_if_mount_failed**

If FAT partition can not be mounted, and this parameter is true, create partition table and format the filesystem.

int **max_files**

Max number of open files.

size_t **allocation_unit_size**

If format_if_mount_failed is set, and mount fails, format the card with given allocation unit size. Must be a power of 2, between sector size and 128 * sector size. For SD cards, sector size is always 512 bytes. For wear_levelling, sector size is determined by CONFIG_WL_SECTOR_SIZE option.

Using larger allocation unit size will result in higher read/write performance and higher overhead when storing small files.

Setting this field to 0 will result in allocation unit set to the sector size.

esp_err_t **esp_vfs_fat_sdmmc_unmount()**

Unmount FAT filesystem and release resources acquired using esp_vfs_fat_sdmmc_mount.

Return

- ESP_OK on success
- ESP_ERR_INVALID_STATE if esp_vfs_fat_sdmmc_mount hasn't been called

Using FatFs with VFS in read-only mode

Convenience functions, *esp_vfs_fat_rawflash_mount()* and *esp_vfs_fat_rawflash_unmount()*, are provided by fatfs/src/esp_vfs_fat.h header file in order to perform steps 1-3 and 7-9 for read-only FAT partitions. These are particularly helpful for data partitions written only once during factory provisioning and need not be changed by production application throughout the lifetime.

esp_err_t **esp_vfs_fat_rawflash_mount(const** char *_base_path_, **const** char *_partition_label_, **const** *esp_vfs_fat_mount_config_t* *_mount_config_)

Convenience function to initialize read-only FAT filesystem and register it in VFS.

This is an all-in-one function which does the following:

- finds the partition with defined partition_label. Partition label should be configured in the partition table.
- mounts FAT partition using FATFS library
- registers FATFS library with VFS, with prefix given by base_prefix variable

Note Wear levelling is not used when FAT is mounted in read-only mode using this function.

Return

- ESP_OK on success
- ESP_ERR_NOT_FOUND if the partition table does not contain FATFS partition with given label

- ESP_ERR_INVALID_STATE if esp_vfs_fat_rawflash_mount was already called for the same partition
- ESP_ERR_NO_MEM if memory can not be allocated
- ESP_FAIL if partition can not be mounted
- other error codes from SPI flash driver, or FATFS drivers

Parameters

- `base_path`: path where FATFS partition should be mounted (e.g. "/spiflash")
- `partition_label`: label of the partition which should be used
- `mount_config`: pointer to structure with extra parameters for mounting FATFS

esp_err_t **esp_vfs_fat_rawflash_unmount(const** char *_base_path_, **const** char *_partition_label_**)**

Unmount FAT filesystem and release resources acquired using esp_vfs_fat_rawflash_mount.

Return

- ESP_OK on success
- ESP_ERR_INVALID_STATE if esp_vfs_fat_spiflash_mount hasn't been called

Parameters

- `base_path`: path where partition should be registered (e.g. "/spiflash")
- `partition_label`: label of partition to be unmounted

FatFS disk IO layer

FatFs has been extended with an API to register disk IO driver at runtime.

Implementation of disk IO functions for SD/MMC cards is provided. It can be registered for the given FatFs drive number using *`ff_diskio_register_sdmmc()`* function.

void **ff_diskio_register(**BYTE *pdrv*, **const** *ff_diskio_impl_t* *_discio_impl_**)**

Register or unregister diskio driver for given drive number.

When FATFS library calls one of disk_xxx functions for driver number pdrv, corresponding function in discio_impl for given pdrv will be called.

Parameters

- `pdrv`: drive number
- `discio_impl`: pointer to *ff_diskio_impl_t* structure with diskio functions or NULL to unregister and free previously registered drive

struct ff_diskio_impl_t

Structure of pointers to disk IO driver functions.

See FatFs documentation for details about these functions

Public Members

DSTATUS (***init**)(BYTE pdrv)

disk initialization function

DSTATUS (***status**)(BYTE pdrv)

disk status check function

DRESULT (***read**)(BYTE pdrv, BYTE *buff, DWORD sector, UINT count)

sector read function

DRESULT (***write**)(BYTE pdrv, **const** BYTE *buff, DWORD sector, UINT count)

sector write function

DRESULT (***ioctl**)(BYTE pdrv, BYTE cmd, void *buff)

function to get info about disk and do some misc operations

void **ff_diskio_register_sdmmc**(BYTE *pdrv*, *sdmmc_card_t* **card*)

Register SD/MMC diskio driver

Parameters

- `pdrv`: drive number
- `card`: pointer to *sdmmc_card_t* structure describing a card; card should be initialized before calling f_mount.

3.6.7 Wear Levelling APIs

Overview

Most of the flash devices and specially SPI flash devices that are used in ESP32 have sector based organization and have limited amount of erase/modification cycles per memory sector. To avoid situation when one sector reach the limit of erases when other sectors was used not often, we have made a component that avoid this situation. The wear levelling component share the amount of erases between all sectors in the memory without user interaction. The wear_levelling component contains APIs related to reading, writing, erasing, memory mapping data in the external SPI flash through the partition component. It also has higher-level APIs which work with FAT filesystem defined in the *FAT filesystem*.

The wear levelling component, together with FAT FS component, works with FAT FS sector size 4096 bytes which is standard size of the flash devices. In this mode the component has best performance, but needs additional memoty in the RAM. To save internal memory the component has two additional modes to work

with sector size 512 bytes: Performance and Safety modes. In Performance mode by erase sector operation data will be stored to the RAM, sector will be erased and then data will be stored back to the flash. If by this operation power off situation will occur, the complete 4096 bytes will be lost. To prevent this the Safety mode was implemented. In safety mode the data will be first stored to the flash and after sector will be erased, will be stored back. If power off situation will occur, after power on, the data will be recovered. By default defined the sector size 512 bytes and Performance mode. To change these values please use the configuration menu.

The wear levelling component does not cache data in RAM. Write and erase functions modify flash directly, and flash contents is consistent when the function returns.

Wear Levelling access APIs

This is the set of APIs for working with data in flash:

- `wl_mount` mount wear levelling module for defined partition
- `wl_unmount` used to unmount levelling module
- `wl_erase_range` used to erase range of addresses in flash
- `wl_write` used to write data to the partition
- `wl_read` used to read data from the partition
- `wl_size` return size of avalible memory in bytes
- `wl_sector_size` returns size of one sector

Generally, try to avoid using the raw wear levelling functions in favor of filesystem-specific functions.

Memory Size

The memory size calculated in the wear Levelling module based on parameters of partition. The module use few sectors of flash for internal data.

See also

- *FAT Filesystem*
- *Partition Table documentation*

Application Example

An example which combines wear levelling driver with FATFS library is provided in `examples/storage/wear_levelling` directory. This example initializes the wear levelling driver, mounts FATFS partition, and writes and reads data from it using POSIX and C library APIs. See README.md file in the example directory for more information.

High level API Reference

Header Files

- fatfs/src/esp_vfs_fat.h

Functions

esp_err_t **esp_vfs_fat_spiflash_mount**(**const** char **base_path*, **const** char **partition_label*, **const** *esp_vfs_fat_mount_config_t* **mount_config*, *wl_handle_t* **wl_handle*)

Convenience function to initialize FAT filesystem in SPI flash and register it in VFS.

This is an all-in-one function which does the following:

- finds the partition with defined partition_label. Partition label should be configured in the partition table.
- initializes flash wear levelling library on top of the given partition
- mounts FAT partition using FATFS library on top of flash wear levelling library
- registers FATFS library with VFS, with prefix given by base_prefix variable

This function is intended to make example code more compact.

Return

- ESP_OK on success
- ESP_ERR_NOT_FOUND if the partition table does not contain FATFS partition with given label
- ESP_ERR_INVALID_STATE if esp_vfs_fat_spiflash_mount was already called
- ESP_ERR_NO_MEM if memory can not be allocated
- ESP_FAIL if partition can not be mounted
- other error codes from wear levelling library, SPI flash driver, or FATFS drivers

Parameters

- `base_path`: path where FATFS partition should be mounted (e.g. "/spiflash")
- `partition_label`: label of the partition which should be used
- `mount_config`: pointer to structure with extra parameters for mounting FATFS
- `wl_handle`: wear levelling driver handle

`struct esp_vfs_fat_mount_config_t`

Configuration arguments for esp_vfs_fat_sdmmc_mount and esp_vfs_fat_spiflash_mount functions.

Public Members

bool **format_if_mount_failed**

If FAT partition can not be mounted, and this parameter is true, create partition table and format the filesystem.

int **max_files**

Max number of open files.

size_t **allocation_unit_size**

If format_if_mount_failed is set, and mount fails, format the card with given allocation unit size. Must be a power of 2, between sector size and 128 * sector size. For SD cards, sector size is always 512 bytes. For wear_levelling, sector size is determined by CONFIG_WL_SECTOR_SIZE option.

Using larger allocation unit size will result in higher read/write performance and higher overhead when storing small files.

Setting this field to 0 will result in allocation unit set to the sector size.

esp_err_t **esp_vfs_fat_spiflash_unmount**(**const** char *_base_path_, *wl_handle_t* _wl_handle_)

Unmount FAT filesystem and release resources acquired using esp_vfs_fat_spiflash_mount.

Return

- ESP_OK on success
- ESP_ERR_INVALID_STATE if esp_vfs_fat_spiflash_mount hasn't been called

Parameters

- **base_path**: path where partition should be registered (e.g. "/spiflash")
- **wl_handle**: wear levelling driver handle returned by esp_vfs_fat_spiflash_mount

Mid level API Reference

Header File

- wear_levelling/include/wear_levelling.h

Functions

esp_err_t **wl_mount**(**const** *esp_partition_t* **partition*, *wl_handle_t* **out_handle*)

Mount WL for defined partition.

Return

- ESP_OK, if the allocation was successfully;
- ESP_ERR_INVALID_ARG, if WL allocation was unsuccessful;
- ESP_ERR_NO_MEM, if there was no memory to allocate WL components;

Parameters

- `partition`: that will be used for access
- `out_handle`: handle of the WL instance

esp_err_t **wl_unmount**(*wl_handle_t* *handle*)

Unmount WL for defined partition.

Return

- ESP_OK, if the operation completed successfully;
- or one of error codes from lower-level flash driver.

Parameters

- `handle`: WL partition handle

esp_err_t **wl_erase_range**(*wl_handle_t* *handle*, size_t *start_addr*, size_t *size*)

Erase part of the WL storage.

Return

- ESP_OK, if the range was erased successfully;
- ESP_ERR_INVALID_ARG, if iterator or dst are NULL;
- ESP_ERR_INVALID_SIZE, if erase would go out of bounds of the partition;
- or one of error codes from lower-level flash driver.

Parameters

- `handle`: WL handle that are related to the partition
- `start_addr`: Address where erase operation should start. Must be aligned to the result of function wl_sector_size(···).
- `size`: Size of the range which should be erased, in bytes. Must be divisible by result of function wl_sector_size(···)..

esp_err_t **wl_write**(*wl_handle_t handle*, size_t *dest_addr*, **const** void **src*, size_t *size*)

Write data to the WL storage.

Before writing data to flash, corresponding region of flash needs to be erased. This can be done using wl_erase_range function.

Note Prior to writing to WL storage, make sure it has been erased with wl_erase_range call.

Return

- ESP_OK, if data was written successfully;
- ESP_ERR_INVALID_ARG, if dst_offset exceeds partition size;
- ESP_ERR_INVALID_SIZE, if write would go out of bounds of the partition;
- or one of error codes from lower-level flash driver.

Parameters

- `handle`: WL handle that are related to the partition
- `dest_addr`: Address where the data should be written, relative to the beginning of the partition.
- `src`: Pointer to the source buffer. Pointer must be non-NULL and buffer must be at least 'size' bytes long.
- `size`: Size of data to be written, in bytes.

esp_err_t **wl_read**(*wl_handle_t handle*, size_t *src_addr*, void **dest*, size_t *size*)

Read data from the WL storage.

Return

- ESP_OK, if data was read successfully;
- ESP_ERR_INVALID_ARG, if src_offset exceeds partition size;
- ESP_ERR_INVALID_SIZE, if read would go out of bounds of the partition;
- or one of error codes from lower-level flash driver.

Parameters

- `handle`: WL module instance that was initialized before
- `dest`: Pointer to the buffer where data should be stored. Pointer must be non-NULL and buffer must be at least 'size' bytes long.
- `src_addr`: Address of the data to be read, relative to the beginning of the partition.
- `size`: Size of data to be read, in bytes.

size_t **wl_size**(*wl_handle_t handle*)

Get size of the WL storage.

Return usable size, in bytes

Parameters

- **handle**: WL module handle that was initialized before

size_t **wl_sector_size**(*wl_handle_t handle*)

Get sector size of the WL instance.

Return sector size, in bytes

Parameters

- **handle**: WL module handle that was initialized before

Macros

WL_INVALID_HANDLE

Type Definitions

typedef int32_t **wl_handle_t**

wear levelling handle

3.6.8 SPIFFS Filesystem

Overview

SPIFFS is a file system intended for SPI NOR flash devices on embedded targets. It supports wear leveling, file system consistency checks and more.

Notes

- Presently, spiffs does not support directories. It produces a flat structure. If SPIFFS is mounted under `/spiffs` creating a file with path `/spiffs/tmp/myfile.txt` will create a file called `/tmp/myfile.txt` in SPIFFS, instead of `myfile.txt` under directory `/spiffs/tmp`.
- It is not a realtime stack. One write operation might last much longer than another.
- Presently, it does not detect or handle bad blocks.

Tools

Host-Side tools for creating SPIFS partition images exist and one such tool is mkspiffs. You can use it to create image from a given folder and then flash that image with `esptool.py`

To do that you need to obtain some parameters:

- Block Size: 4096 (standard for SPI Flash)
- Page Size: 256 (standard for SPI Flash)
- Image Size: Size of the partition in bytes (can be obtained from partition table)
- Partition Offset: Starting address of the partition (can be obtained from partition table)

To pack a folder into 1 Megabyte image:

```
mkspiffs -c [src_folder] -b 4096 -p 256 -s 0x100000 spiffs.bin
```

To flash the image to ESP32 at offset 0x110000:

```
python esptool.py --chip esp32 --port [port] --baud [baud] write_flash -z 0x110000␣
↪spiffs.bin
```

See also

- *Partition Table documentation*

Application Example

An example for using SPIFFS is provided in storage/spiffs directory. This example initializes and mounts SPIFFS partition, and writes and reads data from it using POSIX and C library APIs. See README.md file in the example directory for more information.

High level API Reference

- spiffs/include/esp_spiffs.h

Header File

- spiffs/include/esp_spiffs.h

Functions

esp_err_t **esp_vfs_spiffs_register**(**const** *esp_vfs_spiffs_conf_t* **conf*)

Register and mount SPIFFS to VFS with given path prefix.

Return

- ESP_OK if success
- ESP_ERR_NO_MEM if objects could not be allocated
- ESP_ERR_INVALID_STATE if already mounted or partition is encrypted
- ESP_ERR_NOT_FOUND if partition for SPIFFS was not found
- ESP_FAIL if mount or format fails

Parameters

- `conf`: Pointer to *esp_vfs_spiffs_conf_t* configuration structure

esp_err_t **esp_vfs_spiffs_unregister**(**const** char **partition_label*)

Unregister and unmount SPIFFS from VFS

Return

- ESP_OK if successful
- ESP_ERR_INVALID_STATE already unregistered

Parameters

- `partition_label`: Optional, label of the partition to unregister. If not specified, first partition with subtype=spiffs is used.

bool **esp_spiffs_mounted**(**const** char **partition_label*)

Check if SPIFFS is mounted

Return

- true if mounted
- false if not mounted

Parameters

- `partition_label`: Optional, label of the partition to check. If not specified, first partition with subtype=spiffs is used.

esp_err_t **esp_spiffs_format**(**const** char **partition_label*)

Format the SPIFFS partition

Return

- ESP_OK if successful
- ESP_FAIL on error

Parameters

- `partition_label`: Optional, label of the partition to format. If not specified, first partition with subtype=spiffs is used.

esp_err_t **esp_spiffs_info**(**const** char *_partition_label_, size_t *_total_bytes_, size_t *_used_bytes_)

Get information for SPIFFS

Return

- ESP_OK if success
- ESP_ERR_INVALID_STATE if not mounted

Parameters

- `partition_label`: Optional, label of the partition to get info for. If not specified, first partition with subtype=spiffs is used.
- `total_bytes`: Size of the file system
- `used_bytes`: Current used bytes in the file system

Structures

struct esp_vfs_spiffs_conf_t

Configuration structure for esp_vfs_spiffs_register.

Public Members

const char ***base_path**

File path prefix associated with the filesystem.

const char ***partition_label**

Optional, label of SPIFFS partition to use. If set to NULL, first partition with subtype=spiffs will be used.

size_t **max_files**

Maximum files that could be open at the same time.

bool **format_if_mount_failed**

If true, it will format the file system if it fails to mount.

3.6.9 Manufacturing Utility

Introduction

This utility is designed to create per device instances factory nvs partition images for mass manufacturing purposes. These images are created from user provided configuration and values csv files. This utility only creates the manufacturing binary images and you can choose to use esptool.py or Windows based flash programming utility or direct flash programming to program these images at the time of manufacturing.

Prerequisites

This utility is dependent on the esp-idf nvs partition utility.

- **Operating System requirements:**
  - Linux / MacOS / Windows (standard distributions)
- **The following packages are needed for using this utility:**
  - Python version: 2.7 (minimum) is required.
  - Link to install python: <https://www.python.org/downloads/>

注解: Make sure the python path is set in the PATH environment variable before using this utility.

Make sure to include packages from *requirement.txt* in top level IDF directory.

Workflow

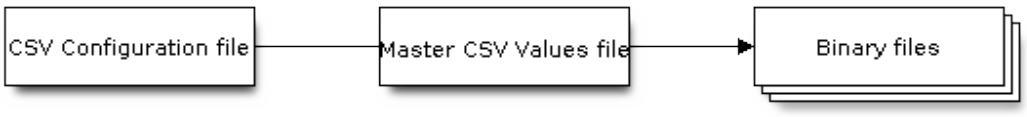

CSV Configuration File:

This file contains the configuration of the device to be manufactured.

The data in configuration file **must** have the following format (*REPEAT* tag is optional):

```
name1,namespace,    <-- First entry should be of type "namespace"
key1,type1,encoding1
key2,type2,encoding2,REPEAT
name2,namespace,
key3,type3,encoding3
key4,type4,encoding4
```

注解: First entry in this file should always be `namespace` entry.

Each row should have these 3 parameters: `key,type,encoding` separated by comma. If `REPEAT` tag is present, the value corresponding to this key in the Master CSV Values File will be the same for all devices.

Please refer to README of nvs_partition utility for detailed description of each parameter.

Below is a sample example of such a configuration file:

```
app,namespace,
firmware_key,data,hex2bin
serial_no,data,string,REPEAT
device_no,data,i32
```

注解: Make sure there are no spaces before and after ',' in the configuration file.

Master CSV Values File:

This file contains details of the device to be manufactured. Each row in this file corresponds to a device instance.

The data in values file **must** have the following format:

```
key1,key2,key3,.....
value1,value2,value3,....
```

注解: First line in this file should always be the `key` names. All the keys from the configuration file should be present here in the **same order**. This file can have additional columns(keys) and they will act like metadata and would not be part of final binary files.

Each row should have the `value` of the corresponding keys, separated by comma. If key has `REPEAT` tag, then its corresponding value **must** be entered in the second line only. Keep the entry empty for this value

in the next lines. Below is the description of this parameter:

value Data value.

Below is a sample example of such a values file:

```
id,firmware_key,serial_no,device_no
1,1a2b3c4d5e6faabb,A1,101
2,1a2b3c4d5e6fccdd,,102
3,1a2b3c4d5e6feeff,,103
```

注解: *If 'REPEAT' tag is present, a new Master CSV Values File is created in the same folder as the input Master CSV File with the values inserted at each line for the key with 'REPEAT' tag.*

注解: *Intermediate CSV files are created by this utility which are input to the nvs partition utility to generate the binary files.*

The format of this intermediate csv file will be:

```
key,type,encoding,value
key,namespace, ,
key1,type1,encoding1,value1
key2,type2,encoding2,value2
```

注解: An intermediate csv file will be created for each device instance.

Running the utility

The mfg_gen.py utility is using the generated CSV Configuration file and Master CSV Values file and is generating per device instance factory images.

Sample CSV Configuration file and Master CSV Values file is provided with this utility.

Usage:

```
$ ./mfg_gen.py [-h] [--conf CONFIG_FILE] [--values VALUES_FILE]
                [--prefix PREFIX] [--fileid FILEID] [--outdir OUTDIR]
                [--size PART_SIZE] [--version {v1,v2}]
                [--keygen {true,false}] [--encrypt {true,false}]
                [--keyfile KEYFILE]
```

Arguments	Description
–conf CONFIG_FILE	the input configuration csv file
–values VALUES_FILE	the input values csv file
–prefix PREFIX	the unique name as each filename prefix
–fileid FILEID	the unique file identifier(any key in values file) as each filename suffix (Default: numeric value(1,2,3···))
–outdir OUTDIR	the output directory to store the files created (Default: current directory)
–size PART_SIZE	Size of NVS Partition in bytes (must be multiple of 4096)
–version {v1,v2}	Set version. Default: v2
–keygen {true,false}	Generate keys for encryption. Default: false
–encrypt {true,false}	Set encryption mode. Default: false
–keyfile KEYFILE	File having key for encryption (Applicable only if encryption mode is true)

You can use the below commands to run this utility with the sample files provided:

```
$ ./mfg_gen.py --conf samples/sample_config.csv --values samples/sample_values_
↪singlepage_blob.csv --prefix Fan --size 0x3000

$ ./mfg_gen.py --conf samples/sample_config.csv --values samples/sample_values_multipage_
↪blob.csv --prefix Fan --size 0x4000
```

注解: When you use this utility to generate per device instance factory images –conf, –values, –prefix and –size arguments are mandatory.

$ ./mfg_gen.py –conf samples/sample_config.csv –values samples/sample_values_singlepage_blob.csv –prefix Fan –size 0x3000 –outdir tmp

---

注解: The –outdir directory is created if not present.

注解: The file path given in the `file` type in the values file is expected to be relative to the current directory from which you are running the utility.

$ ./mfg_gen.py –conf samples/sample_config.csv –values samples/sample_values_singlepage_blob.csv –prefix Fan –size 0x3000 –encrypt true –keygen true

---

注解: `keys/` directory is generated with the encryption keys filename of the form `prefix-fileid-keys.bin`.

You can also run the below command to use the utility to **only** *generate encryption keys binary file (following example 'keys/' directory is created in current path), which can further be used to encrypt per device instance factory images*:

```
$ ./mfg_gen.py --keygen true

$ ./mfg_gen.py --keygen true --keyfile encr_keys.bin
```

注解: When running utility to generate only `keys`, if –keyfile is given it will generate encryption keys with filename given in –keyfile argument.

注解: When you use this utility to generate only encryption keys –keygen argument is mandatory.

注解: The default numeric value: 1,2,3⋯of `fileid` argument, corresponds to each row having device instance values in master csv values file.

注解: **`bin/` and `csv/` sub-directories are created in the `outdir` directory specified while running this utility. The binary files generated will be stored in `bin/` and the intermediate csv files generated will be stored in `csv/`.**

注解: Comments are supported in input config csv file only.

Example code for this API section is provided in storage directory of ESP-IDF examples.

3.7 System API

3.7.1 FreeRTOS

Overview

This section contains documentation of FreeRTOS types, functions, and macros. It is automatically generated from FreeRTOS header files.

For more information about FreeRTOS features specific to ESP-IDF, see *ESP-IDF FreeRTOS SMP Changes* and *ESP-IDF FreeRTOS Additions*.

Task API

Header File

- freertos/include/freertos/task.h

Functions

BaseType_t **xTaskCreatePinnedToCore**(TaskFunction_t *pvTaskCode*, **const** char ***const** *pcName*, **const** uint32_t *usStackDepth*, void ***const** *pvParameters*, UBaseType_t *uxPriority*, *TaskHandle_t* ***const** *pvCreatedTask*, **const** BaseType_t *xCoreID*)

Create a new task with a specified affinity.

This function is similar to xTaskCreate, but allows setting task affinity in SMP system.

Return pdPASS if the task was successfully created and added to a ready list, otherwise an error code defined in the file projdefs.h

Parameters

- `pvTaskCode`: Pointer to the task entry function. Tasks must be implemented to never return (i.e. continuous loop).
- `pcName`: A descriptive name for the task. This is mainly used to facilitate debugging. Max length defined by configMAX_TASK_NAME_LEN - default is 16.
- `usStackDepth`: The size of the task stack specified as the number of bytes. Note that this differs from vanilla FreeRTOS.
- `pvParameters`: Pointer that will be used as the parameter for the task being created.
- `uxPriority`: The priority at which the task should run. Systems that include MPU support can optionally create tasks in a privileged (system) mode by setting bit portPRIVILEGE_BIT of the priority parameter. For example, to create a privileged task at priority 2 the uxPriority parameter should be set to (2 | portPRIVILEGE_BIT).
- `pvCreatedTask`: Used to pass back a handle by which the created task can be referenced.

- `xCoreID`: If the value is tskNO_AFFINITY, the created task is not pinned to any CPU, and the scheduler can run it on any core available. Other values indicate the index number of the CPU which the task should be pinned to. Specifying values larger than (portNUM_PROCESSORS - 1) will cause the function to fail.

static BaseType_t **xTaskCreate**(TaskFunction_t *pvTaskCode*, **const** char ***const** *pcName*, **const** uint32_t *usStackDepth*, void ***const** *pvParameters*, UBaseType_t *uxPriority*, *TaskHandle_t* ***const** *pvCreatedTask*)

Create a new task and add it to the list of tasks that are ready to run.

Internally, within the FreeRTOS implementation, tasks use two blocks of memory. The first block is used to hold the task' s data structures. The second block is used by the task as its stack. If a task is created using xTaskCreate() then both blocks of memory are automatically dynamically allocated inside the xTaskCreate() function. (see http://www.freertos.org/a00111.html). If a task is created using xTaskCreateStatic() then the application writer must provide the required memory. xTaskCreateStatic() therefore allows a task to be created without using any dynamic memory allocation.

See xTaskCreateStatic() for a version that does not use any dynamic memory allocation.

xTaskCreate() can only be used to create a task that has unrestricted access to the entire microcontroller memory map. Systems that include MPU support can alternatively create an MPU constrained task using xTaskCreateRestricted().

Example usage:

```
// Task to be created.
void vTaskCode( void * pvParameters )
{
 for( ;; )
 {
     // Task code goes here.
 }
}

// Function that creates a task.
void vOtherFunction( void )
{
static uint8_t ucParameterToPass;
TaskHandle_t xHandle = NULL;

 // Create the task, storing the handle.  Note that the passed parameter␣
↪ucParameterToPass
 // must exist for the lifetime of the task, so in this case is declared static. ␣
↪If it was just an
```

(下页继续)

(续上页)

```
 // an automatic stack variable it might no longer exist, or at least have been␣
↪corrupted, by the time
 // the new task attempts to access it.
 xTaskCreate( vTaskCode, "NAME", STACK_SIZE, &ucParameterToPass, tskIDLE_PRIORITY, &
↪xHandle );
    configASSERT( xHandle );

 // Use the handle to delete the task.
    if( xHandle != NULL )
    {
     vTaskDelete( xHandle );
    }
}
```

Return pdPASS if the task was successfully created and added to a ready list, otherwise an error code defined in the file projdefs.h

Note If program uses thread local variables (ones specified with "__thread" keyword) then storage for them will be allocated on the task's stack.

Parameters

- `pvTaskCode`: Pointer to the task entry function. Tasks must be implemented to never return (i.e. continuous loop).
- `pcName`: A descriptive name for the task. This is mainly used to facilitate debugging. Max length defined by configMAX_TASK_NAME_LEN - default is 16.
- `usStackDepth`: The size of the task stack specified as the number of bytes. Note that this differs from vanilla FreeRTOS.
- `pvParameters`: Pointer that will be used as the parameter for the task being created.
- `uxPriority`: The priority at which the task should run. Systems that include MPU support can optionally create tasks in a privileged (system) mode by setting bit portPRIVILEGE_BIT of the priority parameter. For example, to create a privileged task at priority 2 the uxPriority parameter should be set to (2 | portPRIVILEGE_BIT).
- `pvCreatedTask`: Used to pass back a handle by which the created task can be referenced.

TaskHandle_t **xTaskCreateStaticPinnedToCore**(TaskFunction_t *pvTaskCode*, **const** char ***const** *pcName*, **const** uint32_t *ulStackDepth*, void ***const** *pvParameters*, UBaseType_t *uxPriority*, StackType_t ***const** *pxStackBuffer*, StaticTask_t ***const** *pxTaskBuffer*, **const** BaseType_t *xCoreID*)

Create a new task with a specified affinity.

This function is similar to xTaskCreateStatic, but allows specifying task affinity in an SMP system.

Return If neither pxStackBuffer or pxTaskBuffer are NULL, then the task will be created and pdPASS is returned. If either pxStackBuffer or pxTaskBuffer are NULL then the task will not be created and errCOULD_NOT_ALLOCATE_REQUIRED_MEMORY is returned.

Parameters

- `pvTaskCode`: Pointer to the task entry function. Tasks must be implemented to never return (i.e. continuous loop).
- `pcName`: A descriptive name for the task. This is mainly used to facilitate debugging. The maximum length of the string is defined by configMAX_TASK_NAME_LEN in FreeRTOSConfig.h.
- `ulStackDepth`: The size of the task stack specified as the number of bytes. Note that this differs from vanilla FreeRTOS.
- `pvParameters`: Pointer that will be used as the parameter for the task being created.
- `uxPriority`: The priority at which the task will run.
- `pxStackBuffer`: Must point to a StackType_t array that has at least ulStackDepth indexes - the array will then be used as the task's stack, removing the need for the stack to be allocated dynamically.
- `pxTaskBuffer`: Must point to a variable of type StaticTask_t, which will then be used to hold the task's data structures, removing the need for the memory to be allocated dynamically.
- `xCoreID`: If the value is tskNO_AFFINITY, the created task is not pinned to any CPU, and the scheduler can run it on any core available. Other values indicate the index number of the CPU which the task should be pinned to. Specifying values larger than (portNUM_PROCESSORS - 1) will cause the function to fail.

`static` *TaskHandle_t* `xTaskCreateStatic`(TaskFunction_t *pvTaskCode*, `const` char *`const` *pcName*, `const` uint32_t *ulStackDepth*, void *`const` *pvParameters*, UBaseType_t *uxPriority*, StackType_t *`const` *pxStackBuffer*, StaticTask_t *`const` *pxTaskBuffer*)

Create a new task and add it to the list of tasks that are ready to run.

Internally, within the FreeRTOS implementation, tasks use two blocks of memory. The first block is used to hold the task's data structures. The second block is used by the task as its stack. If a task is created using xTaskCreate() then both blocks of memory are automatically dynamically allocated inside the xTaskCreate() function. (see http://www.freertos.org/a00111.html). If a task is created using xTaskCreateStatic() then the application writer must provide the required memory. xTaskCreateStatic() therefore allows a task to be created without using any dynamic memory allocation.

Example usage:

```
// Dimensions the buffer that the task being created will use as its stack.
// NOTE:  This is the number of bytes the stack will hold, not the number of
// words as found in vanilla FreeRTOS.
#define STACK_SIZE 200

// Structure that will hold the TCB of the task being created.
StaticTask_t xTaskBuffer;

// Buffer that the task being created will use as its stack.  Note this is
// an array of StackType_t variables.  The size of StackType_t is dependent on
// the RTOS port.
StackType_t xStack[ STACK_SIZE ];

// Function that implements the task being created.
void vTaskCode( void * pvParameters )
{
    // The parameter value is expected to be 1 as 1 is passed in the
    // pvParameters value in the call to xTaskCreateStatic().
    configASSERT( ( uint32_t ) pvParameters == 1UL );

    for( ;; )
    {
        // Task code goes here.
    }
}

// Function that creates a task.
void vOtherFunction( void )
{
    TaskHandle_t xHandle = NULL;

    // Create the task without using any dynamic memory allocation.
    xHandle = xTaskCreateStatic(
                  vTaskCode,       // Function that implements the task.
                  "NAME",          // Text name for the task.
                  STACK_SIZE,      // Stack size in bytes, not words.
                  ( void * ) 1,    // Parameter passed into the task.
                  tskIDLE_PRIORITY,// Priority at which the task is created.
                  xStack,          // Array to use as the task's stack.
                  &xTaskBuffer );  // Variable to hold the task's data structure.
```

(下页继续)

(续上页)

```
    // puxStackBuffer and pxTaskBuffer were not NULL, so the task will have
    // been created, and xHandle will be the task's handle.  Use the handle
    // to suspend the task.
    vTaskSuspend( xHandle );
}
```

Return If neither pxStackBuffer or pxTaskBuffer are NULL, then the task will be created and pdPASS is returned. If either pxStackBuffer or pxTaskBuffer are NULL then the task will not be created and errCOULD_NOT_ALLOCATE_REQUIRED_MEMORY is returned.

Note If program uses thread local variables (ones specified with "___thread" keyword) then storage for them will be allocated on the task' s stack.

Parameters

- `pvTaskCode`: Pointer to the task entry function. Tasks must be implemented to never return (i.e. continuous loop).
- `pcName`: A descriptive name for the task. This is mainly used to facilitate debugging. The maximum length of the string is defined by configMAX_TASK_NAME_LEN in FreeRTOSConfig.h.
- `ulStackDepth`: The size of the task stack specified as the number of bytes. Note that this differs from vanilla FreeRTOS.
- `pvParameters`: Pointer that will be used as the parameter for the task being created.
- `uxPriority`: The priority at which the task will run.
- `pxStackBuffer`: Must point to a StackType_t array that has at least ulStackDepth indexes - the array will then be used as the task' s stack, removing the need for the stack to be allocated dynamically.
- `pxTaskBuffer`: Must point to a variable of type StaticTask_t, which will then be used to hold the task' s data structures, removing the need for the memory to be allocated dynamically.

void **vTaskDelete**(*TaskHandle_t xTaskToDelete*)

Remove a task from the RTOS real time kernel' s management.

The task being deleted will be removed from all ready, blocked, suspended and event lists.

INCLUDE_vTaskDelete must be defined as 1 for this function to be available. See the configuration section for more information.

See the demo application file death.c for sample code that utilises vTaskDelete ().

Note The idle task is responsible for freeing the kernel allocated memory from tasks that have been deleted. It is therefore important that the idle task is not starved of microcontroller processing time if your application makes any calls to vTaskDelete (). Memory allocated by the task code is not automatically freed, and should be freed before the task is deleted.

Example usage:

```
void vOtherFunction( void )
{
TaskHandle_t xHandle;

    // Create the task, storing the handle.
    xTaskCreate( vTaskCode, "NAME", STACK_SIZE, NULL, tskIDLE_PRIORITY, &xHandle );

    // Use the handle to delete the task.
    vTaskDelete( xHandle );
}
```

Parameters

- `xTaskToDelete`: The handle of the task to be deleted. Passing NULL will cause the calling task to be deleted.

void **vTaskDelay**(**const** TickType_t *xTicksToDelay*)

Delay a task for a given number of ticks.

The actual time that the task remains blocked depends on the tick rate. The constant portTICK_PERIOD_MS can be used to calculate real time from the tick rate - with the resolution of one tick period.

INCLUDE_vTaskDelay must be defined as 1 for this function to be available. See the configuration section for more information.

vTaskDelay() specifies a time at which the task wishes to unblock relative to the time at which vTaskDelay() is called. For example, specifying a block period of 100 ticks will cause the task to unblock 100 ticks after vTaskDelay() is called. vTaskDelay() does not therefore provide a good method of controlling the frequency of a periodic task as the path taken through the code, as well as other task and interrupt activity, will effect the frequency at which vTaskDelay() gets called and therefore the time at which the task next executes. See vTaskDelayUntil() for an alternative API function designed to facilitate fixed frequency execution. It does this by specifying an absolute time (rather than a relative time) at which the calling task should unblock.

Example usage:

```
void vTaskFunction( void * pvParameters )
{
// Block for 500ms.
const TickType_t xDelay = 500 / portTICK_PERIOD_MS;

    for( ;; )
    {
        // Simply toggle the LED every 500ms, blocking between each toggle.
        vToggleLED();
        vTaskDelay( xDelay );
    }
}
```

Parameters

- `xTicksToDelay`: The amount of time, in tick periods, that the calling task should block.

void **vTaskDelayUntil**(TickType_t *const *pxPreviousWakeTime*, const TickType_t *xTimeIncrement*)

Delay a task until a specified time.

INCLUDE_vTaskDelayUntil must be defined as 1 for this function to be available. See the configuration section for more information.

This function can be used by periodic tasks to ensure a constant execution frequency.

This function differs from vTaskDelay () in one important aspect: vTaskDelay () will cause a task to block for the specified number of ticks from the time vTaskDelay () is called. It is therefore difficult to use vTaskDelay () by itself to generate a fixed execution frequency as the time between a task starting to execute and that task calling vTaskDelay () may not be fixed [the task may take a different path though the code between calls, or may get interrupted or preempted a different number of times each time it executes].

Whereas vTaskDelay () specifies a wake time relative to the time at which the function is called, vTaskDelayUntil () specifies the absolute (exact) time at which it wishes to unblock.

The constant portTICK_PERIOD_MS can be used to calculate real time from the tick rate - with the resolution of one tick period.

Example usage:

```
// Perform an action every 10 ticks.
void vTaskFunction( void * pvParameters )
{
TickType_t xLastWakeTime;
```

(下页继续)

(续上页)

```
const TickType_t xFrequency = 10;

    // Initialise the xLastWakeTime variable with the current time.
    xLastWakeTime = xTaskGetTickCount ();
    for( ;; )
    {
        // Wait for the next cycle.
        vTaskDelayUntil( &xLastWakeTime, xFrequency );

        // Perform action here.
    }
}
```

Parameters

- `pxPreviousWakeTime`: Pointer to a variable that holds the time at which the task was last unblocked. The variable must be initialised with the current time prior to its first use (see the example below). Following this the variable is automatically updated within vTaskDelayUntil ().
- `xTimeIncrement`: The cycle time period. The task will be unblocked at time *pxPreviousWakeTime + xTimeIncrement. Calling vTaskDelayUntil with the same xTimeIncrement parameter value will cause the task to execute with a fixed interface period.

UBaseType_t **uxTaskPriorityGet**(*TaskHandle_t xTask*)

Obtain the priority of any task.

INCLUDE_uxTaskPriorityGet must be defined as 1 for this function to be available. See the configuration section for more information.

Example usage:

```
void vAFunction( void )
{
TaskHandle_t xHandle;

 // Create a task, storing the handle.
 xTaskCreate( vTaskCode, "NAME", STACK_SIZE, NULL, tskIDLE_PRIORITY, &xHandle );

 // ...

 // Use the handle to obtain the priority of the created task.
```

(下页继续)

(续上页)

```
  // It was created with tskIDLE_PRIORITY, but may have changed
  // it itself.
  if( uxTaskPriorityGet( xHandle ) != tskIDLE_PRIORITY )
  {
      // The task has changed it's priority.
  }

  // ...

  // Is our priority higher than the created task?
  if( uxTaskPriorityGet( xHandle ) < uxTaskPriorityGet( NULL ) )
  {
      // Our priority (obtained using NULL handle) is higher.
  }
}
```

Return The priority of xTask.

Parameters

- `xTask`: Handle of the task to be queried. Passing a NULL handle results in the priority of the calling task being returned.

UBaseType_t **uxTaskPriorityGetFromISR**(*TaskHandle_t xTask*)

A version of uxTaskPriorityGet() that can be used from an ISR.

Return The priority of xTask.

Parameters

- `xTask`: Handle of the task to be queried. Passing a NULL handle results in the priority of the calling task being returned.

eTaskState **eTaskGetState**(*TaskHandle_t xTask*)

Obtain the state of any task.

States are encoded by the eTaskState enumerated type.

INCLUDE_eTaskGetState must be defined as 1 for this function to be available. See the configuration section for more information.

Return The state of xTask at the time the function was called. Note the state of the task might change between the function being called, and the functions return value being tested by the calling task.

Parameters

- `xTask`: Handle of the task to be queried.

void **vTaskPrioritySet**(*TaskHandle_t xTask*, UBaseType_t *uxNewPriority*)

Set the priority of any task.

INCLUDE_vTaskPrioritySet must be defined as 1 for this function to be available. See the configuration section for more information.

A context switch will occur before the function returns if the priority being set is higher than the currently executing task.

Example usage:

```
void vAFunction( void )
{
TaskHandle_t xHandle;

 // Create a task, storing the handle.
 xTaskCreate( vTaskCode, "NAME", STACK_SIZE, NULL, tskIDLE_PRIORITY, &xHandle );

 // ...

 // Use the handle to raise the priority of the created task.
 vTaskPrioritySet( xHandle, tskIDLE_PRIORITY + 1 );

 // ...

 // Use a NULL handle to raise our priority to the same value.
 vTaskPrioritySet( NULL, tskIDLE_PRIORITY + 1 );
}
```

Parameters

- `xTask`: Handle to the task for which the priority is being set. Passing a NULL handle results in the priority of the calling task being set.
- `uxNewPriority`: The priority to which the task will be set.

void **vTaskSuspend**(*TaskHandle_t xTaskToSuspend*)

Suspend a task.

INCLUDE_vTaskSuspend must be defined as 1 for this function to be available. See the configuration section for more information.

When suspended, a task will never get any microcontroller processing time, no matter what its priority.

Calls to vTaskSuspend are not accumulative - i.e. calling vTaskSuspend () twice on the same task still only requires one call to vTaskResume () to ready the suspended task.

Example usage:

```
void vAFunction( void )
{
TaskHandle_t xHandle;

 // Create a task, storing the handle.
 xTaskCreate( vTaskCode, "NAME", STACK_SIZE, NULL, tskIDLE_PRIORITY, &xHandle );

 // ...

 // Use the handle to suspend the created task.
 vTaskSuspend( xHandle );

 // ...

 // The created task will not run during this period, unless
 // another task calls vTaskResume( xHandle ).

 //...


 // Suspend ourselves.
 vTaskSuspend( NULL );

 // We cannot get here unless another task calls vTaskResume
 // with our handle as the parameter.
}
```

Parameters

- `xTaskToSuspend`: Handle to the task being suspended. Passing a NULL handle will cause the calling task to be suspended.

void **vTaskResume**(*TaskHandle_t xTaskToResume*)

Resumes a suspended task.

INCLUDE_vTaskSuspend must be defined as 1 for this function to be available. See the configuration section for more information.

A task that has been suspended by one or more calls to vTaskSuspend () will be made available for

running again by a single call to vTaskResume ().

Example usage:

```
void vAFunction( void )
{
TaskHandle_t xHandle;

 // Create a task, storing the handle.
 xTaskCreate( vTaskCode, "NAME", STACK_SIZE, NULL, tskIDLE_PRIORITY, &xHandle );

 // ...

 // Use the handle to suspend the created task.
 vTaskSuspend( xHandle );

 // ...

 // The created task will not run during this period, unless
 // another task calls vTaskResume( xHandle ).

 //...


 // Resume the suspended task ourselves.
 vTaskResume( xHandle );

 // The created task will once again get microcontroller processing
 // time in accordance with its priority within the system.
}
```

Parameters

- `xTaskToResume`: Handle to the task being readied.

BaseType_t **xTaskResumeFromISR**(*TaskHandle_t xTaskToResume*)

An implementation of vTaskResume() that can be called from within an ISR.

INCLUDE_xTaskResumeFromISR must be defined as 1 for this function to be available. See the configuration section for more information.

A task that has been suspended by one or more calls to vTaskSuspend () will be made available for running again by a single call to xTaskResumeFromISR ().

xTaskResumeFromISR() should not be used to synchronise a task with an interrupt if there is a chance

that the interrupt could arrive prior to the task being suspended - as this can lead to interrupts being missed. Use of a semaphore as a synchronisation mechanism would avoid this eventuality.

Return pdTRUE if resuming the task should result in a context switch, otherwise pdFALSE. This is used by the ISR to determine if a context switch may be required following the ISR.

Parameters

- `xTaskToResume`: Handle to the task being readied.

void **vTaskSuspendAll**(void)

Suspends the scheduler without disabling interrupts.

Context switches will not occur while the scheduler is suspended.

After calling vTaskSuspendAll () the calling task will continue to execute without risk of being swapped out until a call to xTaskResumeAll () has been made.

API functions that have the potential to cause a context switch (for example, vTaskDelayUntil(), xQueueSend(), etc.) must not be called while the scheduler is suspended.

Example usage:

```
void vTask1( void * pvParameters )
{
 for( ;; )
 {
     // Task code goes here.

     // ...

     // At some point the task wants to perform a long operation during
     // which it does not want to get swapped out.  It cannot use
     // taskENTER_CRITICAL ()/taskEXIT_CRITICAL () as the length of the
     // operation may cause interrupts to be missed - including the
     // ticks.

     // Prevent the real time kernel swapping out the task.
     vTaskSuspendAll ();

     // Perform the operation here.  There is no need to use critical
     // sections as we have all the microcontroller processing time.
     // During this time interrupts will still operate and the kernel
     // tick count will be maintained.
```

(下页继续)

(续上页)

```
    // ...

    // The operation is complete.  Restart the kernel.
    xTaskResumeAll ();
 }
}
```

BaseType_t **xTaskResumeAll**(void)

Resumes scheduler activity after it was suspended by a call to vTaskSuspendAll().

xTaskResumeAll() only resumes the scheduler. It does not unsuspend tasks that were previously suspended by a call to vTaskSuspend().

Example usage:

```
void vTask1( void * pvParameters )
{
 for( ;; )
 {
    // Task code goes here.

    // ...

    // At some point the task wants to perform a long operation during
    // which it does not want to get swapped out.  It cannot use
    // taskENTER_CRITICAL ()/taskEXIT_CRITICAL () as the length of the
    // operation may cause interrupts to be missed - including the
    // ticks.

    // Prevent the real time kernel swapping out the task.
    vTaskSuspendAll ();

    // Perform the operation here.  There is no need to use critical
    // sections as we have all the microcontroller processing time.
    // During this time interrupts will still operate and the real
    // time kernel tick count will be maintained.

    // ...

    // The operation is complete.  Restart the kernel.  We want to force
    // a context switch - but there is no point if resuming the scheduler
```

(下页继续)

(续上页)

```
    // caused a context switch already.
    if( !xTaskResumeAll () )
    {
         taskYIELD ();
    }
 }
}
```

Return If resuming the scheduler caused a context switch then pdTRUE is returned, otherwise pdFALSE is returned.

TickType_t **xTaskGetTickCount**(void)

Get tick count

Return The count of ticks since vTaskStartScheduler was called.

TickType_t **xTaskGetTickCountFromISR**(void)

Get tick count from ISR

This is a version of xTaskGetTickCount() that is safe to be called from an ISR - provided that TickType_t is the natural word size of the microcontroller being used or interrupt nesting is either not supported or not being used.

Return The count of ticks since vTaskStartScheduler was called.

UBaseType_t **uxTaskGetNumberOfTasks**(void)

Get current number of tasks

Return The number of tasks that the real time kernel is currently managing. This includes all ready, blocked and suspended tasks. A task that has been deleted but not yet freed by the idle task will also be included in the count.

char ***pcTaskGetTaskName**(*TaskHandle_t xTaskToQuery*)

Get task name

Return The text (human readable) name of the task referenced by the handle xTaskToQuery. A task can query its own name by either passing in its own handle, or by setting xTaskToQuery to NULL. INCLUDE_pcTaskGetTaskName must be set to 1 in FreeRTOSConfig.h for pcTaskGetTaskName() to be available.

UBaseType_t **uxTaskGetStackHighWaterMark**(*TaskHandle_t xTask*)

Returns the high water mark of the stack associated with xTask.

INCLUDE_uxTaskGetStackHighWaterMark must be set to 1 in FreeRTOSConfig.h for this function to be available.

High water mark is the minimum free stack space there has been (in bytes rather than words as found in vanilla FreeRTOS) since the task started. The smaller the returned number the closer the task has come to overflowing its stack.

Return The smallest amount of free stack space there has been (in bytes rather than words as found in vanilla FreeRTOS) since the task referenced by xTask was created.

Parameters

- `xTask`: Handle of the task associated with the stack to be checked. Set xTask to NULL to check the stack of the calling task.

uint8_t *`pxTaskGetStackStart`(*TaskHandle_t xTask*)

Returns the start of the stack associated with xTask.

INCLUDE_pxTaskGetStackStart must be set to 1 in FreeRTOSConfig.h for this function to be available.

Returns the highest stack memory address on architectures where the stack grows down from high memory, and the lowest memory address on architectures where the stack grows up from low memory.

Return A pointer to the start of the stack.

Parameters

- `xTask`: Handle of the task associated with the stack returned. Set xTask to NULL to return the stack of the calling task.

void `vTaskSetApplicationTaskTag`(*TaskHandle_t xTask*, *TaskHookFunction_t pxHookFunction*)

Sets pxHookFunction to be the task hook function used by the task xTask.

Parameters

- `xTask`: Handle of the task to set the hook function for Passing xTask as NULL has the effect of setting the calling tasks hook function.
- `pxHookFunction`: Pointer to the hook function.

TaskHookFunction_t `xTaskGetApplicationTaskTag`(*TaskHandle_t xTask*)

Get the hook function assigned to given task.

Return The pxHookFunction value assigned to the task xTask.

Parameters

- `xTask`: Handle of the task to get the hook function for Passing xTask as NULL has the effect of getting the calling tasks hook function.

void **vTaskSetThreadLocalStoragePointer**(*TaskHandle_t xTaskToSet*, BaseType_t *xIndex*, void **pvValue*)

Set local storage pointer specific to the given task.

Each task contains an array of pointers that is dimensioned by the configNUM_THREAD_LOCAL_STORAGE_POINTERS setting in FreeRTOSConfig.h. The kernel does not use the pointers itself, so the application writer can use the pointers for any purpose they wish.

Parameters

- `xTaskToSet`: Task to set thread local storage pointer for
- `xIndex`: The index of the pointer to set, from 0 to configNUM_THREAD_LOCAL_STORAGE_POINTERS - 1.
- `pvValue`: Pointer value to set.

void ***pvTaskGetThreadLocalStoragePointer**(*TaskHandle_t xTaskToQuery*, BaseType_t *xIndex*)

Get local storage pointer specific to the given task.

Each task contains an array of pointers that is dimensioned by the configNUM_THREAD_LOCAL_STORAGE_POINTERS setting in FreeRTOSConfig.h. The kernel does not use the pointers itself, so the application writer can use the pointers for any purpose they wish.

Return Pointer value

Parameters

- `xTaskToQuery`: Task to get thread local storage pointer for
- `xIndex`: The index of the pointer to get, from 0 to configNUM_THREAD_LOCAL_STORAGE_POINTERS - 1.

void **vTaskSetThreadLocalStoragePointerAndDelCallback**(*TaskHandle_t xTaskToSet*, BaseType_t *xIndex*, void **pvValue*, *TlsDeleteCallbackFunction_t pvDelCallback*)

Set local storage pointer and deletion callback.

Each task contains an array of pointers that is dimensioned by the configNUM_THREAD_LOCAL_STORAGE_POINTERS setting in FreeRTOSConfig.h. The kernel does not use the pointers itself, so the application writer can use the pointers for any purpose they wish.

Local storage pointers set for a task can reference dynamically allocated resources. This function is similar to vTaskSetThreadLocalStoragePointer, but provides a way to release these resources when the

task gets deleted. For each pointer, a callback function can be set. This function will be called when task is deleted, with the local storage pointer index and value as arguments.

Parameters

- `xTaskToSet`: Task to set thread local storage pointer for
- `xIndex`: The index of the pointer to set, from 0 to configNUM_THREAD_LOCAL_STORAGE_POINTERS - 1.
- `pvValue`: Pointer value to set.
- `pvDelCallback`: Function to call to dispose of the local storage pointer when the task is deleted.

BaseType_t **xTaskCallApplicationTaskHook**(*TaskHandle_t xTask*, void **pvParameter*)

Calls the hook function associated with xTask. Passing xTask as NULL has the effect of calling the Running tasks (the calling task) hook function.

Parameters

- `xTask`: Handle of the task to call the hook for.
- `pvParameter`: Parameter passed to the hook function for the task to interpret as it wants. The return value is the value returned by the task hook function registered by the user.

TaskHandle_t **xTaskGetIdleTaskHandle**(void)

Get the handle of idle task for the current CPU.

xTaskGetIdleTaskHandle() is only available if INCLUDE_xTaskGetIdleTaskHandle is set to 1 in FreeRTOSConfig.h.

Return The handle of the idle task. It is not valid to call xTaskGetIdleTaskHandle() before the scheduler has been started.

TaskHandle_t **xTaskGetIdleTaskHandleForCPU**(UBaseType_t *cpuid*)

Get the handle of idle task for the given CPU.

xTaskGetIdleTaskHandleForCPU() is only available if INCLUDE_xTaskGetIdleTaskHandle is set to 1 in FreeRTOSConfig.h.

Return Idle task handle of a given cpu. It is not valid to call xTaskGetIdleTaskHandleForCPU() before the scheduler has been started.

Parameters

- `cpuid`: The CPU to get the handle for

UBaseType_t **uxTaskGetSystemState**(*TaskStatus_t* ***const** *pxTaskStatusArray*, **const** UBaseType_t *uxArraySize*, uint32_t ***const** *pulTotalRunTime*)

Get the state of tasks in the system.

configUSE_TRACE_FACILITY must be defined as 1 in FreeRTOSConfig.h for uxTaskGetSystemState() to be available.

uxTaskGetSystemState() populates an TaskStatus_t structure for each task in the system. TaskStatus_t structures contain, among other things, members for the task handle, task name, task priority, task state, and total amount of run time consumed by the task. See the TaskStatus_t structure definition in this file for the full member list.

Example usage:

```
// This example demonstrates how a human readable table of run time stats
// information is generated from raw data provided by uxTaskGetSystemState().
// The human readable table is written to pcWriteBuffer
void vTaskGetRunTimeStats( char *pcWriteBuffer )
{
TaskStatus_t *pxTaskStatusArray;
volatile UBaseType_t uxArraySize, x;
uint32_t ulTotalRunTime, ulStatsAsPercentage;

 // Make sure the write buffer does not contain a string.
 *pcWriteBuffer = 0x00;

 // Take a snapshot of the number of tasks in case it changes while this
 // function is executing.
 uxArraySize = uxTaskGetNumberOfTasks();

 // Allocate a TaskStatus_t structure for each task.  An array could be
 // allocated statically at compile time.
 pxTaskStatusArray = pvPortMalloc( uxArraySize * sizeof( TaskStatus_t ) );

 if( pxTaskStatusArray != NULL )
 {
     // Generate raw status information about each task.
     uxArraySize = uxTaskGetSystemState( pxTaskStatusArray, uxArraySize, &
↪ulTotalRunTime );

     // For percentage calculations.
     ulTotalRunTime /= 100UL;
```

(下页继续)

(续上页)

```
    // Avoid divide by zero errors.
    if( ulTotalRunTime > 0 )
    {
        // For each populated position in the pxTaskStatusArray array,
        // format the raw data as human readable ASCII data
        for( x = 0; x < uxArraySize; x++ )
        {
            // What percentage of the total run time has the task used?
            // This will always be rounded down to the nearest integer.
            // ulTotalRunTimeDiv100 has already been divided by 100.
            ulStatsAsPercentage = pxTaskStatusArray[ x ].ulRunTimeCounter /␣
↪ulTotalRunTime;

            if( ulStatsAsPercentage > 0UL )
            {
                sprintf( pcWriteBuffer, "%s\t\t%lu\t\t%lu%%\r\n",␣
↪pxTaskStatusArray[ x ].pcTaskName, pxTaskStatusArray[ x ].ulRunTimeCounter,␣
↪ulStatsAsPercentage );
            }
            else
            {
                // If the percentage is zero here then the task has
                // consumed less than 1% of the total run time.
                sprintf( pcWriteBuffer, "%s\t\t%lu\t\t<1%%\r\n",␣
↪pxTaskStatusArray[ x ].pcTaskName, pxTaskStatusArray[ x ].ulRunTimeCounter );
            }

            pcWriteBuffer += strlen( ( char * ) pcWriteBuffer );
        }
    }

    // The array is no longer needed, free the memory it consumes.
    vPortFree( pxTaskStatusArray );
 }
}
```

Note This function is intended for debugging use only as its use results in the scheduler remaining suspended for an extended period.

Return The number of TaskStatus_t structures that were populated by uxTaskGetSystemState(). This should equal the number returned by the uxTaskGetNumberOfTasks() API function, but

will be zero if the value passed in the uxArraySize parameter was too small.

Parameters

- `pxTaskStatusArray`: A pointer to an array of TaskStatus_t structures. The array must contain at least one TaskStatus_t structure for each task that is under the control of the RTOS. The number of tasks under the control of the RTOS can be determined using the uxTaskGetNumberOfTasks() API function.
- `uxArraySize`: The size of the array pointed to by the pxTaskStatusArray parameter. The size is specified as the number of indexes in the array, or the number of TaskStatus_t structures contained in the array, not by the number of bytes in the array.
- `pulTotalRunTime`: If configGENERATE_RUN_TIME_STATS is set to 1 in FreeRTOSConfig.h then *pulTotalRunTime is set by uxTaskGetSystemState() to the total run time (as defined by the run time stats clock, see http://www.freertos.org/rtos-run-time-stats.html) since the target booted. pulTotalRunTime can be set to NULL to omit the total run time information.

void **vTaskList**(char **pcWriteBuffer*)

List all the current tasks.

configUSE_TRACE_FACILITY and configUSE_STATS_FORMATTING_FUNCTIONS must both be defined as 1 for this function to be available. See the configuration section of the FreeRTOS.org website for more information.

Lists all the current tasks, along with their current state and stack usage high water mark.

Note This function will disable interrupts for its duration. It is not intended for normal application runtime use but as a debug aid.

Tasks are reported as blocked ('B'), ready ('R'), deleted ('D') or suspended ('S').

vTaskList() calls uxTaskGetSystemState(), then formats part of the uxTaskGetSystemState() output into a human readable table that displays task names, states and stack usage.

Note This function is provided for convenience only, and is used by many of the demo applications. Do not consider it to be part of the scheduler.

vTaskList() has a dependency on the sprintf() C library function that might bloat the code size, use a lot of stack, and provide different results on different platforms. An alternative, tiny, third party, and limited functionality implementation of sprintf() is provided in many of the FreeRTOS/Demo sub-directories in a file called printf-stdarg.c (note printf-stdarg.c does not provide a full snprintf() implementation!).

It is recommended that production systems call uxTaskGetSystemState() directly to get access to raw stats data, rather than indirectly through a call to vTaskList().

Parameters

- `pcWriteBuffer`: A buffer into which the above mentioned details will be written, in ASCII form. This buffer is assumed to be large enough to contain the generated report. Approximately 40 bytes per task should be sufficient.

void **vTaskGetRunTimeStats**(char **pcWriteBuffer*)

Get the state of running tasks as a string

configGENERATE_RUN_TIME_STATS and configUSE_STATS_FORMATTING_FUNCTIONS must both be defined as 1 for this function to be available. The application must also then provide definitions for portCONFIGURE_TIMER_FOR_RUN_TIME_STATS() and portGET_RUN_TIME_COUNTER_VALUE() to configure a peripheral timer/counter and return the timers current count value respectively. The counter should be at least 10 times the frequency of the tick count.

Setting configGENERATE_RUN_TIME_STATS to 1 will result in a total accumulated execution time being stored for each task. The resolution of the accumulated time value depends on the frequency of the timer configured by the portCONFIGURE_TIMER_FOR_RUN_TIME_STATS() macro. Calling vTaskGetRunTimeStats() writes the total execution time of each task into a buffer, both as an absolute count value and as a percentage of the total system execution time.

Note This function will disable interrupts for its duration. It is not intended for normal application runtime use but as a debug aid.

vTaskGetRunTimeStats() calls uxTaskGetSystemState(), then formats part of the uxTaskGetSystemState() output into a human readable table that displays the amount of time each task has spent in the Running state in both absolute and percentage terms.

Note This function is provided for convenience only, and is used by many of the demo applications. Do not consider it to be part of the scheduler.

vTaskGetRunTimeStats() has a dependency on the sprintf() C library function that might bloat the code size, use a lot of stack, and provide different results on different platforms. An alternative, tiny, third party, and limited functionality implementation of sprintf() is provided in many of the FreeRTOS/Demo sub-directories in a file called printf-stdarg.c (note printf-stdarg.c does not provide a full snprintf() implementation!).

It is recommended that production systems call uxTaskGetSystemState() directly to get access to raw stats data, rather than indirectly through a call to vTaskGetRunTimeStats().

Parameters

- `pcWriteBuffer`: A buffer into which the execution times will be written, in ASCII form. This buffer is assumed to be large enough to contain the generated report. Approximately 40 bytes per task should be sufficient.

BaseType_t **xTaskNotify**(*TaskHandle_t xTaskToNotify*, uint32_t *ulValue*, *eNotifyAction eAction*)

Send task notification.

configUSE_TASK_NOTIFICATIONS must be undefined or defined as 1 for this function to be available.

When configUSE_TASK_NOTIFICATIONS is set to one each task has its own private "notification value", which is a 32-bit unsigned integer (uint32_t).

Events can be sent to a task using an intermediary object. Examples of such objects are queues, semaphores, mutexes and event groups. Task notifications are a method of sending an event directly to a task without the need for such an intermediary object.

A notification sent to a task can optionally perform an action, such as update, overwrite or increment the task's notification value. In that way task notifications can be used to send data to a task, or be used as light weight and fast binary or counting semaphores.

A notification sent to a task will remain pending until it is cleared by the task calling xTaskNotifyWait() or ulTaskNotifyTake(). If the task was already in the Blocked state to wait for a notification when the notification arrives then the task will automatically be removed from the Blocked state (unblocked) and the notification cleared.

A task can use xTaskNotifyWait() to [optionally] block to wait for a notification to be pending, or ulTaskNotifyTake() to [optionally] block to wait for its notification value to have a non-zero value. The task does not consume any CPU time while it is in the Blocked state.

See http://www.FreeRTOS.org/RTOS-task-notifications.html for details.

Return Dependent on the value of eAction. See the description of the eAction parameter.

Parameters

- `xTaskToNotify`: The handle of the task being notified. The handle to a task can be returned from the xTaskCreate() API function used to create the task, and the handle of the currently running task can be obtained by calling xTaskGetCurrentTaskHandle().
- `ulValue`: Data that can be sent with the notification. How the data is used depends on the value of the eAction parameter.
- `eAction`: Specifies how the notification updates the task's notification value, if at all. Valid values for eAction are as follows:
  - eSetBits: The task's notification value is bitwise ORed with ulValue. xTaskNofify() always returns pdPASS in this case.
  - eIncrement: The task's notification value is incremented. ulValue is not used and xTaskNotify() always returns pdPASS in this case.
  - eSetValueWithOverwrite: The task's notification value is set to the value of ulValue, even if the task being notified had not yet processed the previous notification (the task already had a notification pending). xTaskNotify() always returns pdPASS in this case.

- eSetValueWithoutOverwrite: If the task being notified did not already have a notification pending then the task's notification value is set to ulValue and xTaskNotify() will return pdPASS. If the task being notified already had a notification pending then no action is performed and pdFAIL is returned.
- eNoAction: The task receives a notification without its notification value being updated. ulValue is not used and xTaskNotify() always returns pdPASS in this case.

BaseType_t **xTaskNotifyFromISR**(*TaskHandle_t xTaskToNotify*, uint32_t *ulValue*, *eNotifyAction eAction*, BaseType_t *pxHigherPriorityTaskWoken*)

Send task notification from an ISR.

configUSE_TASK_NOTIFICATIONS must be undefined or defined as 1 for this function to be available.

When configUSE_TASK_NOTIFICATIONS is set to one each task has its own private "notification value", which is a 32-bit unsigned integer (uint32_t).

A version of xTaskNotify() that can be used from an interrupt service routine (ISR).

Events can be sent to a task using an intermediary object. Examples of such objects are queues, semaphores, mutexes and event groups. Task notifications are a method of sending an event directly to a task without the need for such an intermediary object.

A notification sent to a task can optionally perform an action, such as update, overwrite or increment the task's notification value. In that way task notifications can be used to send data to a task, or be used as light weight and fast binary or counting semaphores.

A notification sent to a task will remain pending until it is cleared by the task calling xTaskNotifyWait() or ulTaskNotifyTake(). If the task was already in the Blocked state to wait for a notification when the notification arrives then the task will automatically be removed from the Blocked state (unblocked) and the notification cleared.

A task can use xTaskNotifyWait() to [optionally] block to wait for a notification to be pending, or ulTaskNotifyTake() to [optionally] block to wait for its notification value to have a non-zero value. The task does not consume any CPU time while it is in the Blocked state.

See http://www.FreeRTOS.org/RTOS-task-notifications.html for details.

Return Dependent on the value of eAction. See the description of the eAction parameter.

Parameters

- `xTaskToNotify`: The handle of the task being notified. The handle to a task can be returned from the xTaskCreate() API function used to create the task, and the handle of the currently running task can be obtained by calling xTaskGetCurrentTaskHandle().
- `ulValue`: Data that can be sent with the notification. How the data is used depends on the value of the eAction parameter.

- `eAction`: Specifies how the notification updates the task' s notification value, if at all. Valid values for eAction are as follows:
  - eSetBits: The task' s notification value is bitwise ORed with ulValue. xTaskNofify() always returns pdPASS in this case.
  - eIncrement: The task' s notification value is incremented. ulValue is not used and xTaskNotify() always returns pdPASS in this case.
  - eSetValueWithOverwrite: The task' s notification value is set to the value of ulValue, even if the task being notified had not yet processed the previous notification (the task already had a notification pending). xTaskNotify() always returns pdPASS in this case.
  - eSetValueWithoutOverwrite: If the task being notified did not already have a notification pending then the task' s notification value is set to ulValue and xTaskNotify() will return pdPASS. If the task being notified already had a notification pending then no action is performed and pdFAIL is returned.
  - eNoAction: The task receives a notification without its notification value being updated. ulValue is not used and xTaskNotify() always returns pdPASS in this case.
- `pxHigherPriorityTaskWoken`: xTaskNotifyFromISR() will set *pxHigherPriorityTaskWoken to pdTRUE if sending the notification caused the task to which the notification was sent to leave the Blocked state, and the unblocked task has a priority higher than the currently running task. If xTaskNotifyFromISR() sets this value to pdTRUE then a context switch should be requested before the interrupt is exited. How a context switch is requested from an ISR is dependent on the port - see the documentation page for the port in use.

BaseType_t **xTaskNotifyWait**(uint32_t *ulBitsToClearOnEntry*, uint32_t *ulBitsToClearOnExit*, uint32_t **pulNotificationValue*, TickType_t *xTicksToWait*)

Wait for task notification

configUSE_TASK_NOTIFICATIONS must be undefined or defined as 1 for this function to be available.

When configUSE_TASK_NOTIFICATIONS is set to one each task has its own private "notification value" , which is a 32-bit unsigned integer (uint32_t).

Events can be sent to a task using an intermediary object. Examples of such objects are queues, semaphores, mutexes and event groups. Task notifications are a method of sending an event directly to a task without the need for such an intermediary object.

A notification sent to a task can optionally perform an action, such as update, overwrite or increment the task' s notification value. In that way task notifications can be used to send data to a task, or be used as light weight and fast binary or counting semaphores.

A notification sent to a task will remain pending until it is cleared by the task calling xTaskNotifyWait() or ulTaskNotifyTake(). If the task was already in the Blocked state to wait for a notification when the

notification arrives then the task will automatically be removed from the Blocked state (unblocked) and the notification cleared.

A task can use xTaskNotifyWait() to [optionally] block to wait for a notification to be pending, or ulTaskNotifyTake() to [optionally] block to wait for its notification value to have a non-zero value. The task does not consume any CPU time while it is in the Blocked state.

See http://www.FreeRTOS.org/RTOS-task-notifications.html for details.

Return If a notification was received (including notifications that were already pending when xTaskNotifyWait was called) then pdPASS is returned. Otherwise pdFAIL is returned.

Parameters

- `ulBitsToClearOnEntry`: Bits that are set in ulBitsToClearOnEntry value will be cleared in the calling task' s notification value before the task checks to see if any notifications are pending, and optionally blocks if no notifications are pending. Setting ulBitsToClearOnEntry to ULONG_MAX (if limits.h is included) or 0xffffffffUL (if limits.h is not included) will have the effect of resetting the task' s notification value to 0. Setting ulBitsToClearOnEntry to 0 will leave the task' s notification value unchanged.
- `ulBitsToClearOnExit`: If a notification is pending or received before the calling task exits the xTaskNotifyWait() function then the task's notification value (see the xTaskNotify() API function) is passed out using the pulNotificationValue parameter. Then any bits that are set in ulBitsToClearOnExit will be cleared in the task's notification value (note *pulNotificationValue is set before any bits are cleared). Setting ulBitsToClearOnExit to ULONG_MAX (if limits.h is included) or 0xffffffffUL (if limits.h is not included) will have the effect of resetting the task' s notification value to 0 before the function exits. Setting ulBitsToClearOnExit to 0 will leave the task' s notification value unchanged when the function exits (in which case the value passed out in pulNotificationValue will match the task' s notification value).
- `pulNotificationValue`: Used to pass the task' s notification value out of the function. Note the value passed out will not be effected by the clearing of any bits caused by ulBitsToClearOnExit being non-zero.
- `xTicksToWait`: The maximum amount of time that the task should wait in the Blocked state for a notification to be received, should a notification not already be pending when xTaskNotifyWait() was called. The task will not consume any processing time while it is in the Blocked state. This is specified in kernel ticks, the macro pdMS_TO_TICSK(value_in_ms) can be used to convert a time specified in milliseconds to a time specified in ticks.

void **vTaskNotifyGiveFromISR**(*TaskHandle_t xTaskToNotify*, BaseType_t *pxHigherPriorityTaskWoken)

Simplified macro for sending task notification from ISR.

configUSE_TASK_NOTIFICATIONS must be undefined or defined as 1 for this macro to be available.

When configUSE_TASK_NOTIFICATIONS is set to one each task has its own private "notification value", which is a 32-bit unsigned integer (uint32_t).

A version of xTaskNotifyGive() that can be called from an interrupt service routine (ISR).

Events can be sent to a task using an intermediary object. Examples of such objects are queues, semaphores, mutexes and event groups. Task notifications are a method of sending an event directly to a task without the need for such an intermediary object.

A notification sent to a task can optionally perform an action, such as update, overwrite or increment the task's notification value. In that way task notifications can be used to send data to a task, or be used as light weight and fast binary or counting semaphores.

vTaskNotifyGiveFromISR() is intended for use when task notifications are used as light weight and faster binary or counting semaphore equivalents. Actual FreeRTOS semaphores are given from an ISR using the xSemaphoreGiveFromISR() API function, the equivalent action that instead uses a task notification is vTaskNotifyGiveFromISR().

When task notifications are being used as a binary or counting semaphore equivalent then the task being notified should wait for the notification using the ulTaskNotificationTake() API function rather than the xTaskNotifyWait() API function.

See http://www.FreeRTOS.org/RTOS-task-notifications.html for more details.

Parameters

- `xTaskToNotify`: The handle of the task being notified. The handle to a task can be returned from the xTaskCreate() API function used to create the task, and the handle of the currently running task can be obtained by calling xTaskGetCurrentTaskHandle().
- `pxHigherPriorityTaskWoken`: vTaskNotifyGiveFromISR() will set *pxHigherPriorityTaskWoken to pdTRUE if sending the notification caused the task to which the notification was sent to leave the Blocked state, and the unblocked task has a priority higher than the currently running task. If vTaskNotifyGiveFromISR() sets this value to pdTRUE then a context switch should be requested before the interrupt is exited. How a context switch is requested from an ISR is dependent on the port - see the documentation page for the port in use.

uint32_t **ulTaskNotifyTake**(BaseType_t *xClearCountOnExit*, TickType_t *xTicksToWait*)

Simplified macro for receiving task notification.

configUSE_TASK_NOTIFICATIONS must be undefined or defined as 1 for this function to be available.

When configUSE_TASK_NOTIFICATIONS is set to one each task has its own private "notification value", which is a 32-bit unsigned integer (uint32_t).

Events can be sent to a task using an intermediary object. Examples of such objects are queues, semaphores, mutexes and event groups. Task notifications are a method of sending an event directly

to a task without the need for such an intermediary object.

A notification sent to a task can optionally perform an action, such as update, overwrite or increment the task' s notification value. In that way task notifications can be used to send data to a task, or be used as light weight and fast binary or counting semaphores.

ulTaskNotifyTake() is intended for use when a task notification is used as a faster and lighter weight binary or counting semaphore alternative. Actual FreeRTOS semaphores are taken using the xSemaphoreTake() API function, the equivalent action that instead uses a task notification is ulTaskNotifyTake().

When a task is using its notification value as a binary or counting semaphore other tasks should send notifications to it using the xTaskNotifyGive() macro, or xTaskNotify() function with the eAction parameter set to eIncrement.

ulTaskNotifyTake() can either clear the task' s notification value to zero on exit, in which case the notification value acts like a binary semaphore, or decrement the task' s notification value on exit, in which case the notification value acts like a counting semaphore.

A task can use ulTaskNotifyTake() to [optionally] block to wait for a the task' s notification value to be non-zero. The task does not consume any CPU time while it is in the Blocked state.

Where as xTaskNotifyWait() will return when a notification is pending, ulTaskNotifyTake() will return when the task' s notification value is not zero.

See http://www.FreeRTOS.org/RTOS-task-notifications.html for details.

Return The task' s notification count before it is either cleared to zero or decremented (see the xClearCountOnExit parameter).

Parameters

- `xClearCountOnExit`: if xClearCountOnExit is pdFALSE then the task' s notification value is decremented when the function exits. In this way the notification value acts like a counting semaphore. If xClearCountOnExit is not pdFALSE then the task' s notification value is cleared to zero when the function exits. In this way the notification value acts like a binary semaphore.
- `xTicksToWait`: The maximum amount of time that the task should wait in the Blocked state for the task' s notification value to be greater than zero, should the count not already be greater than zero when ulTaskNotifyTake() was called. The task will not consume any processing time while it is in the Blocked state. This is specified in kernel ticks, the macro pdMS_TO_TICSK(value_in_ms) can be used to convert a time specified in milliseconds to a time specified in ticks.

Structures

struct xTASK_STATUS

Used with the uxTaskGetSystemState() function to return the state of each task in the system.

Public Members

TaskHandle_t **xHandle**

The handle of the task to which the rest of the information in the structure relates.

const char ***pcTaskName**

A pointer to the task' s name. This value will be invalid if the task was deleted since the structure was populated!

UBaseType_t **xTaskNumber**

A number unique to the task.

eTaskState **eCurrentState**

The state in which the task existed when the structure was populated.

UBaseType_t **uxCurrentPriority**

The priority at which the task was running (may be inherited) when the structure was populated.

UBaseType_t **uxBasePriority**

The priority to which the task will return if the task' s current priority has been inherited to avoid unbounded priority inversion when obtaining a mutex. Only valid if configUSE_MUTEXES is defined as 1 in FreeRTOSConfig.h.

uint32_t **ulRunTimeCounter**

The total run time allocated to the task so far, as defined by the run time stats clock. See http://www.freertos.org/rtos-run-time-stats.html. Only valid when configGENERATE_RUN_TIME_STATS is defined as 1 in FreeRTOSConfig.h.

StackType_t ***pxStackBase**

Points to the lowest address of the task' s stack area.

uint32_t **usStackHighWaterMark**

The minimum amount of stack space that has remained for the task since the task was created. The closer this value is to zero the closer the task has come to overflowing its stack.

BaseType_t **xCoreID**

Core this task is pinned to. This field is present if CONFIG_FREERTOS_VTASKLIST_INCLUDE_COREID is set.

struct xTASK_SNAPSHOT

Used with the uxTaskGetSnapshotAll() function to save memory snapshot of each task in the system. We need this struct because TCB_t is defined (hidden) in tasks.c.

Public Members

void *pxTCB
: Address of task control block.

StackType_t *pxTopOfStack
: Points to the location of the last item placed on the tasks stack.

StackType_t *pxEndOfStack
: Points to the end of the stack. pxTopOfStack < pxEndOfStack, stack grows hi2lo pxTopOfStack > pxEndOfStack, stack grows lo2hi

Macros

tskKERNEL_VERSION_NUMBER

tskKERNEL_VERSION_MAJOR

tskKERNEL_VERSION_MINOR

tskKERNEL_VERSION_BUILD

tskNO_AFFINITY
: Argument of xTaskCreatePinnedToCore indicating that task has no affinity.

tskIDLE_PRIORITY
: Defines the priority used by the idle task. This must not be modified.

taskYIELD()
: task. h

  Macro for forcing a context switch.

taskENTER_CRITICAL(mux)
: task. h

  Macro to mark the start of a critical code region. Preemptive context switches cannot occur when in a critical region.

  Note This may alter the stack (depending on the portable implementation) so must be used with care!

taskENTER_CRITICAL_ISR(mux)

taskEXIT_CRITICAL(mux)
: task. h

  Macro to mark the end of a critical code region. Preemptive context switches cannot occur when in a critical region.

Note This may alter the stack (depending on the portable implementation) so must be used with care!

taskEXIT_CRITICAL_ISR(mux)

taskDISABLE_INTERRUPTS()

task. h

Macro to disable all maskable interrupts.

taskENABLE_INTERRUPTS()

task. h

Macro to enable microcontroller interrupts.

taskSCHEDULER_SUSPENDED

taskSCHEDULER_NOT_STARTED

taskSCHEDULER_RUNNING

xTaskNotifyGive(xTaskToNotify)

Simplified macro for sending task notification.

configUSE_TASK_NOTIFICATIONS must be undefined or defined as 1 for this macro to be available.

When configUSE_TASK_NOTIFICATIONS is set to one each task has its own private "notification value", which is a 32-bit unsigned integer (uint32_t).

Events can be sent to a task using an intermediary object. Examples of such objects are queues, semaphores, mutexes and event groups. Task notifications are a method of sending an event directly to a task without the need for such an intermediary object.

A notification sent to a task can optionally perform an action, such as update, overwrite or increment the task's notification value. In that way task notifications can be used to send data to a task, or be used as light weight and fast binary or counting semaphores.

xTaskNotifyGive() is a helper macro intended for use when task notifications are used as light weight and faster binary or counting semaphore equivalents. Actual FreeRTOS semaphores are given using the xSemaphoreGive() API function, the equivalent action that instead uses a task notification is xTaskNotifyGive().

When task notifications are being used as a binary or counting semaphore equivalent then the task being notified should wait for the notification using the ulTaskNotificationTake() API function rather than the xTaskNotifyWait() API function.

See http://www.FreeRTOS.org/RTOS-task-notifications.html for more details.

Return xTaskNotifyGive() is a macro that calls xTaskNotify() with the eAction parameter set to eIncrement - so pdPASS is always returned.

Parameters

- `xTaskToNotify`: The handle of the task being notified. The handle to a task can be returned from the xTaskCreate() API function used to create the task, and the handle of the currently running task can be obtained by calling xTaskGetCurrentTaskHandle().

Type Definitions

typedef void ***TaskHandle_t**

task. h

Type by which tasks are referenced. For example, a call to xTaskCreate returns (via a pointer parameter) an TaskHandle_t variable that can then be used as a parameter to vTaskDelete to delete the task.

typedef BaseType_t (***TaskHookFunction_t**)(void *)

Defines the prototype to which the application task hook function must conform.

typedef struct *xTASK_STATUS* **TaskStatus_t**

Used with the uxTaskGetSystemState() function to return the state of each task in the system.

typedef struct *xTASK_SNAPSHOT* **TaskSnapshot_t**

Used with the uxTaskGetSnapshotAll() function to save memory snapshot of each task in the system. We need this struct because TCB_t is defined (hidden) in tasks.c.

typedef void (***TlsDeleteCallbackFunction_t**)(int, void *)

Prototype of local storage pointer deletion callback.

Enumerations

enum eTaskState

Task states returned by eTaskGetState.

Values:

eRunning = 0

A task is querying the state of itself, so must be running.

eReady

The task being queried is in a read or pending ready list.

eBlocked

The task being queried is in the Blocked state.

eSuspended

The task being queried is in the Suspended state, or is in the Blocked state with an infinite time out.

eDeleted

The task being queried has been deleted, but its TCB has not yet been freed.

enum eNotifyAction

Actions that can be performed when vTaskNotify() is called.

Values:

eNoAction = 0

Notify the task without updating its notify value.

eSetBits

Set bits in the task' s notification value.

eIncrement

Increment the task' s notification value.

eSetValueWithOverwrite

Set the task' s notification value to a specific value even if the previous value has not yet been read by the task.

eSetValueWithoutOverwrite

Set the task' s notification value if the previous value has been read by the task.

enum eSleepModeStatus

Possible return values for eTaskConfirmSleepModeStatus().

Values:

eAbortSleep = 0

A task has been made ready or a context switch pended since portSUPPORESS_TICKS_AND_SLEEP() was called - abort entering a sleep mode.

eStandardSleep

Enter a sleep mode that will not last any longer than the expected idle time.

eNoTasksWaitingTimeout

No tasks are waiting for a timeout so it is safe to enter a sleep mode that can only be exited by an external interrupt.

Queue API

Header File

- freertos/include/freertos/queue.h

Functions

BaseType_t **xQueueGenericSendFromISR**(*QueueHandle_t* *xQueue*, **const** void ***const** *pvItemToQueue*, BaseType_t ***const** *pxHigherPriorityTaskWoken*, **const** BaseType_t *xCopyPosition*)

It is preferred that the macros xQueueSendFromISR(), xQueueSendToFrontFromISR() and xQueueSendToBackFromISR() be used in place of calling this function directly. xQueueGiveFromISR() is an equivalent for use by semaphores that don't actually copy any data.

Post an item on a queue. It is safe to use this function from within an interrupt service routine.

Items are queued by copy not reference so it is preferable to only queue small items, especially when called from an ISR. In most cases it would be preferable to store a pointer to the item being queued.

Example usage for buffered IO (where the ISR can obtain more than one value per call):

```
void vBufferISR( void )
{
char cIn;
BaseType_t xHigherPriorityTaskWokenByPost;

   // We have not woken a task at the start of the ISR.
   xHigherPriorityTaskWokenByPost = pdFALSE;

   // Loop until the buffer is empty.
   do
   {
       // Obtain a byte from the buffer.
       cIn = portINPUT_BYTE( RX_REGISTER_ADDRESS );

       // Post each byte.
       xQueueGenericSendFromISR( xRxQueue, &cIn, &xHigherPriorityTaskWokenByPost,␣
↪queueSEND_TO_BACK );

   } while( portINPUT_BYTE( BUFFER_COUNT ) );

   // Now the buffer is empty we can switch context if necessary.  Note that the
   // name of the yield function required is port specific.
   if( xHigherPriorityTaskWokenByPost )
   {
       taskYIELD_YIELD_FROM_ISR();
   }
}
```

Return pdTRUE if the data was successfully sent to the queue, otherwise errQUEUE_FULL.

Parameters

- `xQueue`: The handle to the queue on which the item is to be posted.
- `pvItemToQueue`: A pointer to the item that is to be placed on the queue. The size of the items the queue will hold was defined when the queue was created, so this many bytes will be copied from pvItemToQueue into the queue storage area.
- `pxHigherPriorityTaskWoken`: xQueueGenericSendFromISR() will set *pxHigherPriorityTaskWoken to pdTRUE if sending to the queue caused a task to unblock, and the unblocked task has a priority higher than the currently running task. If xQueueGenericSendFromISR() sets this value to pdTRUE then a context switch should be requested before the interrupt is exited.
- `xCopyPosition`: Can take the value queueSEND_TO_BACK to place the item at the back of the queue, or queueSEND_TO_FRONT to place the item at the front of the queue (for high priority messages).

BaseType_t **xQueueGiveFromISR**(*QueueHandle_t xQueue*, BaseType_t ***const** *pxHigherPriorityTaskWoken*)

BaseType_t **xQueueIsQueueEmptyFromISR**(**const** *QueueHandle_t xQueue*)

Utilities to query queues that are safe to use from an ISR. These utilities should be used only from witin an ISR, or within a critical section.

BaseType_t **xQueueIsQueueFullFromISR**(**const** *QueueHandle_t xQueue*)

UBaseType_t **uxQueueMessagesWaitingFromISR**(**const** *QueueHandle_t xQueue*)

BaseType_t **xQueueGenericSend**(*QueueHandle_t xQueue*, **const** void ***const** *pvItemToQueue*, TickType_t *xTicksToWait*, **const** BaseType_t *xCopyPosition*)

It is preferred that the macros xQueueSend(), xQueueSendToFront() and xQueueSendToBack() are used in place of calling this function directly.

Post an item on a queue. The item is queued by copy, not by reference. This function must not be called from an interrupt service routine. See xQueueSendFromISR () for an alternative which may be used in an ISR.

Example usage:

```
struct AMessage
{
char ucMessageID;
char ucData[ 20 ];
} xMessage;

uint32_t ulVar = 10UL;
```

(下页继续)

(续上页)

```
void vATask( void *pvParameters )
{
QueueHandle_t xQueue1, xQueue2;
struct AMessage *pxMessage;

// Create a queue capable of containing 10 uint32_t values.
xQueue1 = xQueueCreate( 10, sizeof( uint32_t ) );

// Create a queue capable of containing 10 pointers to AMessage structures.
// These should be passed by pointer as they contain a lot of data.
xQueue2 = xQueueCreate( 10, sizeof( struct AMessage * ) );

// ...

if( xQueue1 != 0 )
{
    // Send an uint32_t.  Wait for 10 ticks for space to become
    // available if necessary.
    if( xQueueGenericSend( xQueue1, ( void * ) &ulVar, ( TickType_t ) 10, queueSEND_
↪TO_BACK ) != pdPASS )
    {
        // Failed to post the message, even after 10 ticks.
    }
}

if( xQueue2 != 0 )
{
    // Send a pointer to a struct AMessage object.  Don't block if the
    // queue is already full.
    pxMessage = & xMessage;
    xQueueGenericSend( xQueue2, ( void * ) &pxMessage, ( TickType_t ) 0, queueSEND_
↪TO_BACK );
}

// ... Rest of task code.
}
```

Return pdTRUE if the item was successfully posted, otherwise errQUEUE_FULL.

Parameters

- `xQueue`: The handle to the queue on which the item is to be posted.
- `pvItemToQueue`: A pointer to the item that is to be placed on the queue. The size of the items the queue will hold was defined when the queue was created, so this many bytes will be copied from pvItemToQueue into the queue storage area.
- `xTicksToWait`: The maximum amount of time the task should block waiting for space to become available on the queue, should it already be full. The call will return immediately if this is set to 0 and the queue is full. The time is defined in tick periods so the constant portTICK_PERIOD_MS should be used to convert to real time if this is required.
- `xCopyPosition`: Can take the value queueSEND_TO_BACK to place the item at the back of the queue, or queueSEND_TO_FRONT to place the item at the front of the queue (for high priority messages).

BaseType_t **xQueuePeekFromISR**(*QueueHandle_t* *xQueue*, void ***const** *pvBuffer*)

A version of xQueuePeek() that can be called from an interrupt service routine (ISR).

Receive an item from a queue without removing the item from the queue. The item is received by copy so a buffer of adequate size must be provided. The number of bytes copied into the buffer was defined when the queue was created.

Successfully received items remain on the queue so will be returned again by the next call, or a call to xQueueReceive().

Return pdTRUE if an item was successfully received from the queue, otherwise pdFALSE.

Parameters

- `xQueue`: The handle to the queue from which the item is to be received.
- `pvBuffer`: Pointer to the buffer into which the received item will be copied.

BaseType_t **xQueueGenericReceive**(*QueueHandle_t* *xQueue*, void ***const** *pvBuffer*, TickType_t *xTicksToWait*, **const** BaseType_t *xJustPeek*)

It is preferred that the macro xQueueReceive() be used rather than calling this function directly.

Receive an item from a queue. The item is received by copy so a buffer of adequate size must be provided. The number of bytes copied into the buffer was defined when the queue was created.

This function must not be used in an interrupt service routine. See xQueueReceiveFromISR for an alternative that can.

Example usage:

```
struct AMessage
{
   char ucMessageID;
   char ucData[ 20 ];
```

(下页继续)

(续上页)

```
} xMessage;

QueueHandle_t xQueue;

// Task to create a queue and post a value.
void vATask( void *pvParameters )
{
struct AMessage *pxMessage;

   // Create a queue capable of containing 10 pointers to AMessage structures.
   // These should be passed by pointer as they contain a lot of data.
   xQueue = xQueueCreate( 10, sizeof( struct AMessage * ) );
   if( xQueue == 0 )
   {
       // Failed to create the queue.
   }

   // ...

   // Send a pointer to a struct AMessage object.  Don't block if the
   // queue is already full.
   pxMessage = & xMessage;
   xQueueSend( xQueue, ( void * ) &pxMessage, ( TickType_t ) 0 );

   // ... Rest of task code.
}

// Task to receive from the queue.
void vADifferentTask( void *pvParameters )
{
struct AMessage *pxRxedMessage;

   if( xQueue != 0 )
   {
       // Receive a message on the created queue.  Block for 10 ticks if a
       // message is not immediately available.
       if( xQueueGenericReceive( xQueue, &( pxRxedMessage ), ( TickType_t ) 10 ) )
       {
           // pcRxedMessage now points to the struct AMessage variable posted
           // by vATask.
```

(下页继续)

(续上页)

```
        }
    }

    // ... Rest of task code.
}
```

Return pdTRUE if an item was successfully received from the queue, otherwise pdFALSE.

Parameters

- `xQueue`: The handle to the queue from which the item is to be received.
- `pvBuffer`: Pointer to the buffer into which the received item will be copied.
- `xTicksToWait`: The maximum amount of time the task should block waiting for an item to receive should the queue be empty at the time of the call. The time is defined in tick periods so the constant portTICK_PERIOD_MS should be used to convert to real time if this is required. xQueueGenericReceive() will return immediately if the queue is empty and xTicksToWait is 0.
- `xJustPeek`: When set to true, the item received from the queue is not actually removed from the queue - meaning a subsequent call to xQueueReceive() will return the same item. When set to false, the item being received from the queue is also removed from the queue.

UBaseType_t **uxQueueMessagesWaiting**(const *QueueHandle_t* *xQueue*)

Return the number of messages stored in a queue.

Return The number of messages available in the queue.

Parameters

- `xQueue`: A handle to the queue being queried.

UBaseType_t **uxQueueSpacesAvailable**(const *QueueHandle_t* *xQueue*)

Return the number of free spaces available in a queue. This is equal to the number of items that can be sent to the queue before the queue becomes full if no items are removed.

Return The number of spaces available in the queue.

Parameters

- `xQueue`: A handle to the queue being queried.

void **vQueueDelete**(*QueueHandle_t* *xQueue*)

Delete a queue - freeing all the memory allocated for storing of items placed on the queue.

Parameters

- `xQueue`: A handle to the queue to be deleted.

BaseType_t **xQueueReceiveFromISR**(*QueueHandle_t xQueue*, void *const *pvBuffer*, BaseType_t *const *pxHigherPriorityTaskWoken*)

Receive an item from a queue. It is safe to use this function from within an interrupt service routine.

Example usage:

```
QueueHandle_t xQueue;

// Function to create a queue and post some values.
void vAFunction( void *pvParameters )
{
char cValueToPost;
const TickType_t xTicksToWait = ( TickType_t )0xff;

   // Create a queue capable of containing 10 characters.
   xQueue = xQueueCreate( 10, sizeof( char ) );
   if( xQueue == 0 )
   {
       // Failed to create the queue.
   }

   // ...

   // Post some characters that will be used within an ISR.  If the queue
   // is full then this task will block for xTicksToWait ticks.
   cValueToPost = 'a';
   xQueueSend( xQueue, ( void * ) &cValueToPost, xTicksToWait );
   cValueToPost = 'b';
   xQueueSend( xQueue, ( void * ) &cValueToPost, xTicksToWait );

   // ... keep posting characters ... this task may block when the queue
   // becomes full.

   cValueToPost = 'c';
   xQueueSend( xQueue, ( void * ) &cValueToPost, xTicksToWait );
}

// ISR that outputs all the characters received on the queue.
void vISR_Routine( void )
{
```

(下页继续)

(续上页)

```
BaseType_t xTaskWokenByReceive = pdFALSE;
char cRxedChar;

   while( xQueueReceiveFromISR( xQueue, ( void * ) &cRxedChar, &
↪xTaskWokenByReceive) )
   {
       // A character was received.  Output the character now.
       vOutputCharacter( cRxedChar );

       // If removing the character from the queue woke the task that was
       // posting onto the queue cTaskWokenByReceive will have been set to
       // pdTRUE.  No matter how many times this loop iterates only one
       // task will be woken.
   }

   if( cTaskWokenByPost != ( char ) pdFALSE;
   {
       taskYIELD ();
   }
}
```

Return pdTRUE if an item was successfully received from the queue, otherwise pdFALSE.

Parameters

- `xQueue`: The handle to the queue from which the item is to be received.
- `pvBuffer`: Pointer to the buffer into which the received item will be copied.
- `pxHigherPriorityTaskWoken`: A task may be blocked waiting for space to become available on the queue. If xQueueReceiveFromISR causes such a task to unblock *pxTaskWoken will get set to pdTRUE, otherwise *pxTaskWoken will remain unchanged.

void **vQueueAddToRegistry**(*QueueHandle_t xQueue*, **const** char **pcName*)

The registry is provided as a means for kernel aware debuggers to locate queues, semaphores and mutexes. Call vQueueAddToRegistry() add a queue, semaphore or mutex handle to the registry if you want the handle to be available to a kernel aware debugger. If you are not using a kernel aware debugger then this function can be ignored.

configQUEUE_REGISTRY_SIZE defines the maximum number of handles the registry can hold. configQUEUE_REGISTRY_SIZE must be greater than 0 within FreeRTOSConfig.h for the registry to be available. Its value does not effect the number of queues, semaphores and mutexes that can be created - just the number that the registry can hold.

Parameters

- `xQueue`: The handle of the queue being added to the registry. This is the handle returned by a call to xQueueCreate(). Semaphore and mutex handles can also be passed in here.
- `pcName`: The name to be associated with the handle. This is the name that the kernel aware debugger will display. The queue registry only stores a pointer to the string - so the string must be persistent (global or preferably in ROM/Flash), not on the stack.

void **vQueueUnregisterQueue**(*QueueHandle_t* *xQueue*)

The registry is provided as a means for kernel aware debuggers to locate queues, semaphores and mutexes. Call vQueueAddToRegistry() add a queue, semaphore or mutex handle to the registry if you want the handle to be available to a kernel aware debugger, and vQueueUnregisterQueue() to remove the queue, semaphore or mutex from the register. If you are not using a kernel aware debugger then this function can be ignored.

Parameters

- `xQueue`: The handle of the queue being removed from the registry.

`const` char *__pcQueueGetName__(*QueueHandle_t* *xQueue*)

The queue registry is provided as a means for kernel aware debuggers to locate queues, semaphores and mutexes. Call pcQueueGetName() to look up and return the name of a queue in the queue registry from the queue' s handle.

Note This function has been back ported from FreeRTOS v9.0.0

Return If the queue is in the registry then a pointer to the name of the queue is returned. If the queue is not in the registry then NULL is returned.

Parameters

- `xQueue`: The handle of the queue the name of which will be returned.

QueueHandle_t **xQueueGenericCreate**(`const` UBaseType_t *uxQueueLength*, `const` UBaseType_t *uxItemSize*, `const` uint8_t *ucQueueType*)

Generic version of the function used to creaet a queue using dynamic memory allocation. This is called by other functions and macros that create other RTOS objects that use the queue structure as their base.

QueueHandle_t **xQueueGenericCreateStatic**(`const` UBaseType_t *uxQueueLength*, `const` UBaseType_t *uxItemSize*, uint8_t **pucQueueStorage*, StaticQueue_t **pxStaticQueue*, `const` uint8_t *ucQueueType*)

Generic version of the function used to creaet a queue using dynamic memory allocation. This is called by other functions and macros that create other RTOS objects that use the queue structure as their base.

QueueSetHandle_t **xQueueCreateSet**(**const** UBaseType_t *uxEventQueueLength*)

Queue sets provide a mechanism to allow a task to block (pend) on a read operation from multiple queues or semaphores simultaneously.

See FreeRTOS/Source/Demo/Common/Minimal/QueueSet.c for an example using this function.

A queue set must be explicitly created using a call to xQueueCreateSet() before it can be used. Once created, standard FreeRTOS queues and semaphores can be added to the set using calls to xQueueAddToSet(). xQueueSelectFromSet() is then used to determine which, if any, of the queues or semaphores contained in the set is in a state where a queue read or semaphore take operation would be successful.

Note 1: See the documentation on http://wwwFreeRTOS.org/RTOS-queue-sets.html for reasons why queue sets are very rarely needed in practice as there are simpler methods of blocking on multiple objects.

Note 2: Blocking on a queue set that contains a mutex will not cause the mutex holder to inherit the priority of the blocked task.

Note 3: An additional 4 bytes of RAM is required for each space in a every queue added to a queue set. Therefore counting semaphores that have a high maximum count value should not be added to a queue set.

Note 4: A receive (in the case of a queue) or take (in the case of a semaphore) operation must not be performed on a member of a queue set unless a call to xQueueSelectFromSet() has first returned a handle to that set member.

Return If the queue set is created successfully then a handle to the created queue set is returned. Otherwise NULL is returned.

Parameters

- `uxEventQueueLength`: Queue sets store events that occur on the queues and semaphores contained in the set. uxEventQueueLength specifies the maximum number of events that can be queued at once. To be absolutely certain that events are not lost uxEventQueueLength should be set to the total sum of the length of the queues added to the set, where binary semaphores and mutexes have a length of 1, and counting semaphores have a length set by their maximum count value. Examples:
  - If a queue set is to hold a queue of length 5, another queue of length 12, and a binary semaphore, then uxEventQueueLength should be set to (5 + 12 + 1), or 18.
  - If a queue set is to hold three binary semaphores then uxEventQueueLength should be set to (1 + 1 + 1), or 3.
  - If a queue set is to hold a counting semaphore that has a maximum count of 5, and a counting semaphore that has a maximum count of 3, then uxEventQueueLength should be set to (5 + 3), or 8.

BaseType_t **xQueueAddToSet**(*QueueSetMemberHandle_t xQueueOrSemaphore*, *QueueSetHandle_t xQueueSet*)

Adds a queue or semaphore to a queue set that was previously created by a call to xQueueCreateSet().

See FreeRTOS/Source/Demo/Common/Minimal/QueueSet.c for an example using this function.

Note 1: A receive (in the case of a queue) or take (in the case of a semaphore) operation must not be performed on a member of a queue set unless a call to xQueueSelectFromSet() has first returned a handle to that set member.

Return If the queue or semaphore was successfully added to the queue set then pdPASS is returned. If the queue could not be successfully added to the queue set because it is already a member of a different queue set then pdFAIL is returned.

Parameters

- `xQueueOrSemaphore`: The handle of the queue or semaphore being added to the queue set (cast to an QueueSetMemberHandle_t type).
- `xQueueSet`: The handle of the queue set to which the queue or semaphore is being added.

BaseType_t **xQueueRemoveFromSet**(*QueueSetMemberHandle_t xQueueOrSemaphore*, *QueueSetHandle_t xQueueSet*)

Removes a queue or semaphore from a queue set. A queue or semaphore can only be removed from a set if the queue or semaphore is empty.

See FreeRTOS/Source/Demo/Common/Minimal/QueueSet.c for an example using this function.

Return If the queue or semaphore was successfully removed from the queue set then pdPASS is returned. If the queue was not in the queue set, or the queue (or semaphore) was not empty, then pdFAIL is returned.

Parameters

- `xQueueOrSemaphore`: The handle of the queue or semaphore being removed from the queue set (cast to an QueueSetMemberHandle_t type).
- `xQueueSet`: The handle of the queue set in which the queue or semaphore is included.

QueueSetMemberHandle_t **xQueueSelectFromSet**(*QueueSetHandle_t xQueueSet*, **const** TickType_t *xTicksToWait*)

xQueueSelectFromSet() selects from the members of a queue set a queue or semaphore that either contains data (in the case of a queue) or is available to take (in the case of a semaphore). xQueueSelectFromSet() effectively allows a task to block (pend) on a read operation on all the queues and semaphores in a queue set simultaneously.

See FreeRTOS/Source/Demo/Common/Minimal/QueueSet.c for an example using this function.

Note 1: See the documentation on http://wwwFreeRTOS.org/RTOS-queue-sets.html for reasons why queue sets are very rarely needed in practice as there are simpler methods of blocking on multiple

objects.

Note 2: Blocking on a queue set that contains a mutex will not cause the mutex holder to inherit the priority of the blocked task.

Note 3: A receive (in the case of a queue) or take (in the case of a semaphore) operation must not be performed on a member of a queue set unless a call to xQueueSelectFromSet() has first returned a handle to that set member.

Return xQueueSelectFromSet() will return the handle of a queue (cast to a QueueSetMemberHandle_t type) contained in the queue set that contains data, or the handle of a semaphore (cast to a QueueSetMemberHandle_t type) contained in the queue set that is available, or NULL if no such queue or semaphore exists before before the specified block time expires.

Parameters

- `xQueueSet`: The queue set on which the task will (potentially) block.
- `xTicksToWait`: The maximum time, in ticks, that the calling task will remain in the Blocked state (with other tasks executing) to wait for a member of the queue set to be ready for a successful queue read or semaphore take operation.

QueueSetMemberHandle_t **xQueueSelectFromSetFromISR**(*QueueSetHandle_t xQueueSet*)

A version of xQueueSelectFromSet() that can be used from an ISR.

Macros

xQueueCreate(uxQueueLength, uxItemSize)

Creates a new queue instance. This allocates the storage required by the new queue and returns a handle for the queue.

Example usage:

```
struct AMessage
{
char ucMessageID;
char ucData[ 20 ];
};

void vATask( void *pvParameters )
{
QueueHandle_t xQueue1, xQueue2;

// Create a queue capable of containing 10 uint32_t values.
xQueue1 = xQueueCreate( 10, sizeof( uint32_t ) );
```

(下页继续)

(续上页)

```
if( xQueue1 == 0 )
{
    // Queue was not created and must not be used.
}

// Create a queue capable of containing 10 pointers to AMessage structures.
// These should be passed by pointer as they contain a lot of data.
xQueue2 = xQueueCreate( 10, sizeof( struct AMessage * ) );
if( xQueue2 == 0 )
{
    // Queue was not created and must not be used.
}

// ... Rest of task code.
}
```

Return If the queue is successfully create then a handle to the newly created queue is returned. If the queue cannot be created then 0 is returned.

Parameters

- `uxQueueLength`: The maximum number of items that the queue can contain.
- `uxItemSize`: The number of bytes each item in the queue will require. Items are queued by copy, not by reference, so this is the number of bytes that will be copied for each posted item. Each item on the queue must be the same size.

`xQueueCreateStatic`(uxQueueLength, uxItemSize, pucQueueStorage, pxQueueBuffer)

Creates a new queue instance, and returns a handle by which the new queue can be referenced.

Internally, within the FreeRTOS implementation, queues use two blocks of memory. The first block is used to hold the queue' s data structures. The second block is used to hold items placed into the queue. If a queue is created using xQueueCreate() then both blocks of memory are automatically dynamically allocated inside the xQueueCreate() function. (see http://www.freertos.org/a00111.html). If a queue is created using xQueueCreateStatic() then the application writer must provide the memory that will get used by the queue. xQueueCreateStatic() therefore allows a queue to be created without using any dynamic memory allocation.

http://www.FreeRTOS.org/Embedded-RTOS-Queues.html

Example usage:

```
struct AMessage
{
```

(下页继续)

(续上页)

```
 char ucMessageID;
 char ucData[ 20 ];
};

#define QUEUE_LENGTH 10
#define ITEM_SIZE sizeof( uint32_t )

// xQueueBuffer will hold the queue structure.
StaticQueue_t xQueueBuffer;

// ucQueueStorage will hold the items posted to the queue.  Must be at least
// [(queue length) * ( queue item size)] bytes long.
uint8_t ucQueueStorage[ QUEUE_LENGTH * ITEM_SIZE ];

void vATask( void *pvParameters )
{
 QueueHandle_t xQueue1;

 // Create a queue capable of containing 10 uint32_t values.
 xQueue1 = xQueueCreate( QUEUE_LENGTH, // The number of items the queue can hold.
                         ITEM_SIZE     // The size of each item in the queue
                         &( ucQueueStorage[ 0 ] ), // The buffer that will hold the␣
↪items in the queue.
                         &xQueueBuffer ); // The buffer that will hold the queue␣
↪structure.

 // The queue is guaranteed to be created successfully as no dynamic memory
 // allocation is used.  Therefore xQueue1 is now a handle to a valid queue.

 // ... Rest of task code.
}
```

Return If the queue is created then a handle to the created queue is returned. If pxQueueBuffer is NULL then NULL is returned.

Parameters

- `uxQueueLength`: The maximum number of items that the queue can contain.
- `uxItemSize`: The number of bytes each item in the queue will require. Items are queued by copy, not by reference, so this is the number of bytes that will be copied for each posted item. Each item on the queue must be the same size.

- `pucQueueStorage`: If uxItemSize is not zero then pucQueueStorageBuffer must point to a uint8_t array that is at least large enough to hold the maximum number of items that can be in the queue at any one time - which is (uxQueueLength * uxItemsSize) bytes. If uxItemSize is zero then pucQueueStorageBuffer can be NULL.
- `pxQueueBuffer`: Must point to a variable of type StaticQueue_t, which will be used to hold the queue' s data structure.

`xQueueSendToFront`(xQueue, pvItemToQueue, xTicksToWait)

This is a macro that calls xQueueGenericSend().

Post an item to the front of a queue. The item is queued by copy, not by reference. This function must not be called from an interrupt service routine. See xQueueSendFromISR () for an alternative which may be used in an ISR.

Example usage:

```
struct AMessage
{
char ucMessageID;
char ucData[ 20 ];
} xMessage;

uint32_t ulVar = 10UL;

void vATask( void *pvParameters )
{
QueueHandle_t xQueue1, xQueue2;
struct AMessage *pxMessage;

// Create a queue capable of containing 10 uint32_t values.
xQueue1 = xQueueCreate( 10, sizeof( uint32_t ) );

// Create a queue capable of containing 10 pointers to AMessage structures.
// These should be passed by pointer as they contain a lot of data.
xQueue2 = xQueueCreate( 10, sizeof( struct AMessage * ) );

// ...

if( xQueue1 != 0 )
{
    // Send an uint32_t.  Wait for 10 ticks for space to become
    // available if necessary.
```

(下页继续)

(续上页)

```
    if( xQueueSendToFront( xQueue1, ( void * ) &ulVar, ( TickType_t ) 10 ) !=␣
↪pdPASS )
    {
        // Failed to post the message, even after 10 ticks.
    }
}

if( xQueue2 != 0 )
{
    // Send a pointer to a struct AMessage object.  Don't block if the
    // queue is already full.
    pxMessage = & xMessage;
    xQueueSendToFront( xQueue2, ( void * ) &pxMessage, ( TickType_t ) 0 );
}

// ... Rest of task code.
}
```

Return pdTRUE if the item was successfully posted, otherwise errQUEUE_FULL.

Parameters

- `xQueue`: The handle to the queue on which the item is to be posted.
- `pvItemToQueue`: A pointer to the item that is to be placed on the queue. The size of the items the queue will hold was defined when the queue was created, so this many bytes will be copied from pvItemToQueue into the queue storage area.
- `xTicksToWait`: The maximum amount of time the task should block waiting for space to become available on the queue, should it already be full. The call will return immediately if this is set to 0 and the queue is full. The time is defined in tick periods so the constant portTICK_PERIOD_MS should be used to convert to real time if this is required.

xQueueSendToBack(xQueue, pvItemToQueue, xTicksToWait)

This is a macro that calls xQueueGenericSend().

Post an item to the back of a queue. The item is queued by copy, not by reference. This function must not be called from an interrupt service routine. See xQueueSendFromISR () for an alternative which may be used in an ISR.

Example usage:

```
struct AMessage
{
```

(下页继续)

(续上页)

```
char ucMessageID;
char ucData[ 20 ];
} xMessage;

uint32_t ulVar = 10UL;

void vATask( void *pvParameters )
{
QueueHandle_t xQueue1, xQueue2;
struct AMessage *pxMessage;

// Create a queue capable of containing 10 uint32_t values.
xQueue1 = xQueueCreate( 10, sizeof( uint32_t ) );

// Create a queue capable of containing 10 pointers to AMessage structures.
// These should be passed by pointer as they contain a lot of data.
xQueue2 = xQueueCreate( 10, sizeof( struct AMessage * ) );

// ...

if( xQueue1 != 0 )
{
    // Send an uint32_t.  Wait for 10 ticks for space to become
    // available if necessary.
    if( xQueueSendToBack( xQueue1, ( void * ) &ulVar, ( TickType_t ) 10 ) != pdPASS␣
↪)
    {
        // Failed to post the message, even after 10 ticks.
    }
}

if( xQueue2 != 0 )
{
    // Send a pointer to a struct AMessage object.  Don't block if the
    // queue is already full.
    pxMessage = & xMessage;
    xQueueSendToBack( xQueue2, ( void * ) &pxMessage, ( TickType_t ) 0 );
}

// ... Rest of task code.
```

(下页继续)

(续上页)

```
}
```

Return pdTRUE if the item was successfully posted, otherwise errQUEUE_FULL.

Parameters

- `xQueue`: The handle to the queue on which the item is to be posted.
- `pvItemToQueue`: A pointer to the item that is to be placed on the queue. The size of the items the queue will hold was defined when the queue was created, so this many bytes will be copied from pvItemToQueue into the queue storage area.
- `xTicksToWait`: The maximum amount of time the task should block waiting for space to become available on the queue, should it already be full. The call will return immediately if this is set to 0 and the queue is full. The time is defined in tick periods so the constant portTICK_PERIOD_MS should be used to convert to real time if this is required.

xQueueSend(xQueue, pvItemToQueue, xTicksToWait)

This is a macro that calls xQueueGenericSend(). It is included for backward compatibility with versions of FreeRTOS.org that did not include the xQueueSendToFront() and xQueueSendToBack() macros. It is equivalent to xQueueSendToBack().

Post an item on a queue. The item is queued by copy, not by reference. This function must not be called from an interrupt service routine. See xQueueSendFromISR () for an alternative which may be used in an ISR.

Example usage:

```
struct AMessage
{
char ucMessageID;
char ucData[ 20 ];
} xMessage;

uint32_t ulVar = 10UL;

void vATask( void *pvParameters )
{
QueueHandle_t xQueue1, xQueue2;
struct AMessage *pxMessage;

// Create a queue capable of containing 10 uint32_t values.
xQueue1 = xQueueCreate( 10, sizeof( uint32_t ) );
```

(下页继续)

(续上页)

```
// Create a queue capable of containing 10 pointers to AMessage structures.
// These should be passed by pointer as they contain a lot of data.
xQueue2 = xQueueCreate( 10, sizeof( struct AMessage * ) );

// ...

if( xQueue1 != 0 )
{
    // Send an uint32_t.  Wait for 10 ticks for space to become
    // available if necessary.
    if( xQueueSend( xQueue1, ( void * ) &ulVar, ( TickType_t ) 10 ) != pdPASS )
    {
        // Failed to post the message, even after 10 ticks.
    }
}

if( xQueue2 != 0 )
{
    // Send a pointer to a struct AMessage object.  Don't block if the
    // queue is already full.
    pxMessage = & xMessage;
    xQueueSend( xQueue2, ( void * ) &pxMessage, ( TickType_t ) 0 );
}

// ... Rest of task code.
}
```

Return pdTRUE if the item was successfully posted, otherwise errQUEUE_FULL.

Parameters

- `xQueue`: The handle to the queue on which the item is to be posted.
- `pvItemToQueue`: A pointer to the item that is to be placed on the queue. The size of the items the queue will hold was defined when the queue was created, so this many bytes will be copied from pvItemToQueue into the queue storage area.
- `xTicksToWait`: The maximum amount of time the task should block waiting for space to become available on the queue, should it already be full. The call will return immediately if this is set to 0 and the queue is full. The time is defined in tick periods so the constant portTICK_PERIOD_MS should be used to convert to real time if this is required.

`xQueueOverwrite`(xQueue, pvItemToQueue)

Only for use with queues that have a length of one - so the queue is either empty or full.

Post an item on a queue. If the queue is already full then overwrite the value held in the queue. The item is queued by copy, not by reference.

This function must not be called from an interrupt service routine. See xQueueOverwriteFromISR () for an alternative which may be used in an ISR.

Example usage:

```
void vFunction( void *pvParameters )
{
QueueHandle_t xQueue;
uint32_t ulVarToSend, ulValReceived;

// Create a queue to hold one uint32_t value.  It is strongly
// recommended *not* to use xQueueOverwrite() on queues that can
// contain more than one value, and doing so will trigger an assertion
// if configASSERT() is defined.
xQueue = xQueueCreate( 1, sizeof( uint32_t ) );

// Write the value 10 to the queue using xQueueOverwrite().
ulVarToSend = 10;
xQueueOverwrite( xQueue, &ulVarToSend );

// Peeking the queue should now return 10, but leave the value 10 in
// the queue.  A block time of zero is used as it is known that the
// queue holds a value.
ulValReceived = 0;
xQueuePeek( xQueue, &ulValReceived, 0 );

if( ulValReceived != 10 )
{
    // Error unless the item was removed by a different task.
}

// The queue is still full.  Use xQueueOverwrite() to overwrite the
// value held in the queue with 100.
ulVarToSend = 100;
xQueueOverwrite( xQueue, &ulVarToSend );

// This time read from the queue, leaving the queue empty once more.
// A block time of 0 is used again.
```

(下页继续)

(续上页)

```
 xQueueReceive( xQueue, &ulValReceived, 0 );

 // The value read should be the last value written, even though the
 // queue was already full when the value was written.
 if( ulValReceived != 100 )
 {
     // Error!
 }

 // ...
}
```

Return xQueueOverwrite() is a macro that calls xQueueGenericSend(), and therefore has the same return values as xQueueSendToFront(). However, pdPASS is the only value that can be returned because xQueueOverwrite() will write to the queue even when the queue is already full.

Parameters

- `xQueue`: The handle of the queue to which the data is being sent.
- `pvItemToQueue`: A pointer to the item that is to be placed on the queue. The size of the items the queue will hold was defined when the queue was created, so this many bytes will be copied from pvItemToQueue into the queue storage area.

`xQueuePeek`(xQueue, pvBuffer, xTicksToWait)

This is a macro that calls the xQueueGenericReceive() function.

Receive an item from a queue without removing the item from the queue. The item is received by copy so a buffer of adequate size must be provided. The number of bytes copied into the buffer was defined when the queue was created.

Successfully received items remain on the queue so will be returned again by the next call, or a call to xQueueReceive().

This macro must not be used in an interrupt service routine. See xQueuePeekFromISR() for an alternative that can be called from an interrupt service routine.

Example usage:

```
struct AMessage
{
char ucMessageID;
char ucData[ 20 ];
} xMessage;
```

(下页继续)

(续上页)

```
QueueHandle_t xQueue;

// Task to create a queue and post a value.
void vATask( void *pvParameters )
{
struct AMessage *pxMessage;

// Create a queue capable of containing 10 pointers to AMessage structures.
// These should be passed by pointer as they contain a lot of data.
xQueue = xQueueCreate( 10, sizeof( struct AMessage * ) );
if( xQueue == 0 )
{
    // Failed to create the queue.
}

// ...

// Send a pointer to a struct AMessage object.  Don't block if the
// queue is already full.
pxMessage = & xMessage;
xQueueSend( xQueue, ( void * ) &pxMessage, ( TickType_t ) 0 );

// ... Rest of task code.
}

// Task to peek the data from the queue.
void vADifferentTask( void *pvParameters )
{
struct AMessage *pxRxedMessage;

if( xQueue != 0 )
{
    // Peek a message on the created queue.  Block for 10 ticks if a
    // message is not immediately available.
    if( xQueuePeek( xQueue, &( pxRxedMessage ), ( TickType_t ) 10 ) )
    {
        // pcRxedMessage now points to the struct AMessage variable posted
        // by vATask, but the item still remains on the queue.
    }
```

(下页继续)

(续上页)

```
}

// ... Rest of task code.
}
```

Return pdTRUE if an item was successfully received from the queue, otherwise pdFALSE.

Parameters

- `xQueue`: The handle to the queue from which the item is to be received.
- `pvBuffer`: Pointer to the buffer into which the received item will be copied.
- `xTicksToWait`: The maximum amount of time the task should block waiting for an item to receive should the queue be empty at the time of the call. The time is defined in tick periods so the constant portTICK_PERIOD_MS should be used to convert to real time if this is required. xQueuePeek() will return immediately if xTicksToWait is 0 and the queue is empty.

xQueueReceive(xQueue, pvBuffer, xTicksToWait)

queue. h

This is a macro that calls the xQueueGenericReceive() function.

Receive an item from a queue. The item is received by copy so a buffer of adequate size must be provided. The number of bytes copied into the buffer was defined when the queue was created.

Successfully received items are removed from the queue.

This function must not be used in an interrupt service routine. See xQueueReceiveFromISR for an alternative that can.

Example usage:

```
struct AMessage
{
 char ucMessageID;
 char ucData[ 20 ];
} xMessage;

QueueHandle_t xQueue;

// Task to create a queue and post a value.
void vATask( void *pvParameters )
{
struct AMessage *pxMessage;
```

(下页继续)

(续上页)

```
 // Create a queue capable of containing 10 pointers to AMessage structures.
 // These should be passed by pointer as they contain a lot of data.
 xQueue = xQueueCreate( 10, sizeof( struct AMessage * ) );
 if( xQueue == 0 )
 {
     // Failed to create the queue.
 }

 // ...

 // Send a pointer to a struct AMessage object.  Don't block if the
 // queue is already full.
 pxMessage = & xMessage;
 xQueueSend( xQueue, ( void * ) &pxMessage, ( TickType_t ) 0 );

 // ... Rest of task code.
}

// Task to receive from the queue.
void vADifferentTask( void *pvParameters )
{
struct AMessage *pxRxedMessage;

 if( xQueue != 0 )
 {
     // Receive a message on the created queue.  Block for 10 ticks if a
     // message is not immediately available.
     if( xQueueReceive( xQueue, &( pxRxedMessage ), ( TickType_t ) 10 ) )
     {
         // pcRxedMessage now points to the struct AMessage variable posted
         // by vATask.
     }
 }

 // ... Rest of task code.
}
```

Return pdTRUE if an item was successfully received from the queue, otherwise pdFALSE.

Parameters

- `xQueue`: The handle to the queue from which the item is to be received.
- `pvBuffer`: Pointer to the buffer into which the received item will be copied.
- `xTicksToWait`: The maximum amount of time the task should block waiting for an item to receive should the queue be empty at the time of the call. xQueueReceive() will return immediately if xTicksToWait is zero and the queue is empty. The time is defined in tick periods so the constant portTICK_PERIOD_MS should be used to convert to real time if this is required.

xQueueSendToFrontFromISR(xQueue, pvItemToQueue, pxHigherPriorityTaskWoken)

This is a macro that calls xQueueGenericSendFromISR().

Post an item to the front of a queue. It is safe to use this macro from within an interrupt service routine.

Items are queued by copy not reference so it is preferable to only queue small items, especially when called from an ISR. In most cases it would be preferable to store a pointer to the item being queued.

Example usage for buffered IO (where the ISR can obtain more than one value per call):

```
void vBufferISR( void )
{
char cIn;
BaseType_t xHigherPrioritTaskWoken;

   // We have not woken a task at the start of the ISR.
   xHigherPriorityTaskWoken = pdFALSE;

   // Loop until the buffer is empty.
   do
   {
       // Obtain a byte from the buffer.
       cIn = portINPUT_BYTE( RX_REGISTER_ADDRESS );

       // Post the byte.
       xQueueSendToFrontFromISR( xRxQueue, &cIn, &xHigherPriorityTaskWoken );

   } while( portINPUT_BYTE( BUFFER_COUNT ) );

   // Now the buffer is empty we can switch context if necessary.
   if( xHigherPriorityTaskWoken )
   {
       portYIELD_FROM_ISR ();
```

(下页继续)

(续上页)

```
    }
}
```

Return pdTRUE if the data was successfully sent to the queue, otherwise errQUEUE_FULL.

Parameters

- `xQueue`: The handle to the queue on which the item is to be posted.
- `pvItemToQueue`: A pointer to the item that is to be placed on the queue. The size of the items the queue will hold was defined when the queue was created, so this many bytes will be copied from pvItemToQueue into the queue storage area.
- `pxHigherPriorityTaskWoken`: xQueueSendToFrontFromISR() will set *pxHigherPriorityTaskWoken to pdTRUE if sending to the queue caused a task to unblock, and the unblocked task has a priority higher than the currently running task. If xQueueSendToFromFromISR() sets this value to pdTRUE then a context switch should be requested before the interrupt is exited.

xQueueSendToBackFromISR(xQueue, pvItemToQueue, pxHigherPriorityTaskWoken)

This is a macro that calls xQueueGenericSendFromISR().

Post an item to the back of a queue. It is safe to use this macro from within an interrupt service routine.

Items are queued by copy not reference so it is preferable to only queue small items, especially when called from an ISR. In most cases it would be preferable to store a pointer to the item being queued.

Example usage for buffered IO (where the ISR can obtain more than one value per call):

```
void vBufferISR( void )
{
char cIn;
BaseType_t xHigherPriorityTaskWoken;

    // We have not woken a task at the start of the ISR.
    xHigherPriorityTaskWoken = pdFALSE;

    // Loop until the buffer is empty.
    do
    {
        // Obtain a byte from the buffer.
        cIn = portINPUT_BYTE( RX_REGISTER_ADDRESS );
```

(下页继续)

(续上页)

```
        // Post the byte.
        xQueueSendToBackFromISR( xRxQueue, &cIn, &xHigherPriorityTaskWoken );

    } while( portINPUT_BYTE( BUFFER_COUNT ) );

    // Now the buffer is empty we can switch context if necessary.
    if( xHigherPriorityTaskWoken )
    {
        portYIELD_FROM_ISR ();
    }
}
```

Return pdTRUE if the data was successfully sent to the queue, otherwise errQUEUE_FULL.

Parameters

- `xQueue`: The handle to the queue on which the item is to be posted.
- `pvItemToQueue`: A pointer to the item that is to be placed on the queue. The size of the items the queue will hold was defined when the queue was created, so this many bytes will be copied from pvItemToQueue into the queue storage area.
- `pxHigherPriorityTaskWoken`: xQueueSendToBackFromISR() will set *pxHigherPriorityTaskWoken to pdTRUE if sending to the queue caused a task to unblock, and the unblocked task has a priority higher than the currently running task. If xQueueSendToBackFromISR() sets this value to pdTRUE then a context switch should be requested before the interrupt is exited.

`xQueueOverwriteFromISR`(xQueue, pvItemToQueue, pxHigherPriorityTaskWoken)

A version of xQueueOverwrite() that can be used in an interrupt service routine (ISR).

Only for use with queues that can hold a single item - so the queue is either empty or full.

Post an item on a queue. If the queue is already full then overwrite the value held in the queue. The item is queued by copy, not by reference.

Example usage:

```
QueueHandle_t xQueue;

void vFunction( void *pvParameters )
{
   // Create a queue to hold one uint32_t value.  It is strongly
   // recommended *not* to use xQueueOverwriteFromISR() on queues that can
```

(下页继续)

(续上页)

```
    // contain more than one value, and doing so will trigger an assertion
    // if configASSERT() is defined.
    xQueue = xQueueCreate( 1, sizeof( uint32_t ) );
}

void vAnInterruptHandler( void )
{
// xHigherPriorityTaskWoken must be set to pdFALSE before it is used.
BaseType_t xHigherPriorityTaskWoken = pdFALSE;
uint32_t ulVarToSend, ulValReceived;

    // Write the value 10 to the queue using xQueueOverwriteFromISR().
    ulVarToSend = 10;
    xQueueOverwriteFromISR( xQueue, &ulVarToSend, &xHigherPriorityTaskWoken );

    // The queue is full, but calling xQueueOverwriteFromISR() again will still
    // pass because the value held in the queue will be overwritten with the
    // new value.
    ulVarToSend = 100;
    xQueueOverwriteFromISR( xQueue, &ulVarToSend, &xHigherPriorityTaskWoken );

    // Reading from the queue will now return 100.

    // ...

    if( xHigherPrioritytaskWoken == pdTRUE )
    {
        // Writing to the queue caused a task to unblock and the unblocked task
        // has a priority higher than or equal to the priority of the currently
        // executing task (the task this interrupt interrupted).  Perform a context
        // switch so this interrupt returns directly to the unblocked task.
        portYIELD_FROM_ISR(); // or portEND_SWITCHING_ISR() depending on the port.
    }
}
```

Return xQueueOverwriteFromISR() is a macro that calls xQueueGenericSendFromISR(), and therefore has the same return values as xQueueSendToFrontFromISR(). However, pdPASS is the only value that can be returned because xQueueOverwriteFromISR() will write to the queue even when the queue is already full.

Parameters

- `xQueue`: The handle to the queue on which the item is to be posted.
- `pvItemToQueue`: A pointer to the item that is to be placed on the queue. The size of the items the queue will hold was defined when the queue was created, so this many bytes will be copied from pvItemToQueue into the queue storage area.
- `pxHigherPriorityTaskWoken`: xQueueOverwriteFromISR() will set *pxHigherPriorityTaskWoken to pdTRUE if sending to the queue caused a task to unblock, and the unblocked task has a priority higher than the currently running task. If xQueueOverwriteFromISR() sets this value to pdTRUE then a context switch should be requested before the interrupt is exited.

xQueueSendFromISR(xQueue, pvItemToQueue, pxHigherPriorityTaskWoken)

This is a macro that calls xQueueGenericSendFromISR(). It is included for backward compatibility with versions of FreeRTOS.org that did not include the xQueueSendToBackFromISR() and xQueueSendToFrontFromISR() macros.

Post an item to the back of a queue. It is safe to use this function from within an interrupt service routine.

Items are queued by copy not reference so it is preferable to only queue small items, especially when called from an ISR. In most cases it would be preferable to store a pointer to the item being queued.

Example usage for buffered IO (where the ISR can obtain more than one value per call):

```
void vBufferISR( void )
{
char cIn;
BaseType_t xHigherPriorityTaskWoken;

   // We have not woken a task at the start of the ISR.
   xHigherPriorityTaskWoken = pdFALSE;

   // Loop until the buffer is empty.
   do
   {
       // Obtain a byte from the buffer.
       cIn = portINPUT_BYTE( RX_REGISTER_ADDRESS );

       // Post the byte.
       xQueueSendFromISR( xRxQueue, &cIn, &xHigherPriorityTaskWoken );

   } while( portINPUT_BYTE( BUFFER_COUNT ) );
```

(下页继续)

(续上页)

```
    // Now the buffer is empty we can switch context if necessary.
    if( xHigherPriorityTaskWoken )
    {
        // Actual macro used here is port specific.
        portYIELD_FROM_ISR ();
    }
}
```

Return pdTRUE if the data was successfully sent to the queue, otherwise errQUEUE_FULL.

Parameters

- `xQueue`: The handle to the queue on which the item is to be posted.
- `pvItemToQueue`: A pointer to the item that is to be placed on the queue. The size of the items the queue will hold was defined when the queue was created, so this many bytes will be copied from pvItemToQueue into the queue storage area.
- `pxHigherPriorityTaskWoken`: xQueueSendFromISR() will set *pxHigherPriorityTaskWoken to pdTRUE if sending to the queue caused a task to unblock, and the unblocked task has a priority higher than the currently running task. If xQueueSendFromISR() sets this value to pdTRUE then a context switch should be requested before the interrupt is exited.

xQueueReset(xQueue)

Reset a queue back to its original empty state. pdPASS is returned if the queue is successfully reset. pdFAIL is returned if the queue could not be reset because there are tasks blocked on the queue waiting to either receive from the queue or send to the queue.

Return always returns pdPASS

Parameters

- `xQueue`: The queue to reset

Type Definitions

typedef void ***QueueHandle_t**

Type by which queues are referenced. For example, a call to xQueueCreate() returns an QueueHandle_t variable that can then be used as a parameter to xQueueSend(), xQueueReceive(), etc.

typedef void ***QueueSetHandle_t**

Type by which queue sets are referenced. For example, a call to xQueueCreateSet() returns an xQueueSet variable that can then be used as a parameter to xQueueSelectFromSet(), xQueueAddToSet(), etc.

typedef void *QueueSetMemberHandle_t

Queue sets can contain both queues and semaphores, so the QueueSetMemberHandle_t is defined as a type to be used where a parameter or return value can be either an QueueHandle_t or an SemaphoreHandle_t.

Semaphore API

Header File

- freertos/include/freertos/semphr.h

Macros

semBINARY_SEMAPHORE_QUEUE_LENGTH

semSEMAPHORE_QUEUE_ITEM_LENGTH

semGIVE_BLOCK_TIME

xSemaphoreCreateBinary()

Creates a new binary semaphore instance, and returns a handle by which the new semaphore can be referenced.

In many usage scenarios it is faster and more memory efficient to use a direct to task notification in place of a binary semaphore! http://www.freertos.org/RTOS-task-notifications.html

Internally, within the FreeRTOS implementation, binary semaphores use a block of memory, in which the semaphore structure is stored. If a binary semaphore is created using xSemaphoreCreateBinary() then the required memory is automatically dynamically allocated inside the xSemaphoreCreateBinary() function. (see http://www.freertos.org/a00111.html). If a binary semaphore is created using xSemaphoreCreateBinaryStatic() then the application writer must provide the memory. xSemaphoreCreateBinaryStatic() therefore allows a binary semaphore to be created without using any dynamic memory allocation.

The old vSemaphoreCreateBinary() macro is now deprecated in favour of this xSemaphoreCreateBinary() function. Note that binary semaphores created using the vSemaphoreCreateBinary() macro are created in a state such that the first call to 'take' the semaphore would pass, whereas binary semaphores created using xSemaphoreCreateBinary() are created in a state such that the the semaphore must first be 'given' before it can be 'taken'.

Function that creates a semaphore by using the existing queue mechanism. The queue length is 1 as this is a binary semaphore. The data size is 0 as nothing is actually stored - all that is important is whether the queue is empty or full (the binary semaphore is available or not).

This type of semaphore can be used for pure synchronisation between tasks or between an interrupt and a task. The semaphore need not be given back once obtained, so one task/interrupt can continuously

'give' the semaphore while another continuously 'takes' the semaphore. For this reason this type of semaphore does not use a priority inheritance mechanism. For an alternative that does use priority inheritance see xSemaphoreCreateMutex().

Example usage:

```
SemaphoreHandle_t xSemaphore = NULL;

void vATask( void * pvParameters )
{
   // Semaphore cannot be used before a call to vSemaphoreCreateBinary ().
   // This is a macro so pass the variable in directly.
   xSemaphore = xSemaphoreCreateBinary();

   if( xSemaphore != NULL )
   {
       // The semaphore was created successfully.
       // The semaphore can now be used.
   }
}
```

Return Handle to the created semaphore.

xSemaphoreCreateBinaryStatic(pxStaticSemaphore)

Creates a new binary semaphore instance, and returns a handle by which the new semaphore can be referenced.

NOTE: In many usage scenarios it is faster and more memory efficient to use a direct to task notification in place of a binary semaphore! http://www.freertos.org/RTOS-task-notifications.html

Internally, within the FreeRTOS implementation, binary semaphores use a block of memory, in which the semaphore structure is stored. If a binary semaphore is created using xSemaphoreCreateBinary() then the required memory is automatically dynamically allocated inside the xSemaphoreCreateBinary() function. (see http://www.freertos.org/a00111.html). If a binary semaphore is created using xSemaphoreCreateBinaryStatic() then the application writer must provide the memory. xSemaphoreCreateBinaryStatic() therefore allows a binary semaphore to be created without using any dynamic memory allocation.

This type of semaphore can be used for pure synchronisation between tasks or between an interrupt and a task. The semaphore need not be given back once obtained, so one task/interrupt can continuously 'give' the semaphore while another continuously 'takes' the semaphore. For this reason this type of semaphore does not use a priority inheritance mechanism. For an alternative that does use priority inheritance see xSemaphoreCreateMutex().

Example usage:

```
SemaphoreHandle_t xSemaphore = NULL;
StaticSemaphore_t xSemaphoreBuffer;

void vATask( void * pvParameters )
{
   // Semaphore cannot be used before a call to xSemaphoreCreateBinary().
   // The semaphore's data structures will be placed in the xSemaphoreBuffer
   // variable, the address of which is passed into the function.  The
   // function's parameter is not NULL, so the function will not attempt any
   // dynamic memory allocation, and therefore the function will not return
   // return NULL.
   xSemaphore = xSemaphoreCreateBinary( &xSemaphoreBuffer );

   // Rest of task code goes here.
}
```

Return If the semaphore is created then a handle to the created semaphore is returned. If pxSemaphoreBuffer is NULL then NULL is returned.

Parameters

- `pxStaticSemaphore`: Must point to a variable of type StaticSemaphore_t, which will then be used to hold the semaphore' s data structure, removing the need for the memory to be allocated dynamically.

`xSemaphoreTake`(xSemaphore, xBlockTime)

Macro to obtain a semaphore. The semaphore must have previously been created with a call to vSemaphoreCreateBinary(), xSemaphoreCreateMutex() or xSemaphoreCreateCounting().

Example usage:

```
SemaphoreHandle_t xSemaphore = NULL;

// A task that creates a semaphore.
void vATask( void * pvParameters )
{
   // Create the semaphore to guard a shared resource.
   vSemaphoreCreateBinary( xSemaphore );
}

// A task that uses the semaphore.
void vAnotherTask( void * pvParameters )
```

(下页继续)

(续上页)

```
{
   // ... Do other things.

   if( xSemaphore != NULL )
   {
       // See if we can obtain the semaphore.  If the semaphore is not available
       // wait 10 ticks to see if it becomes free.
       if( xSemaphoreTake( xSemaphore, ( TickType_t ) 10 ) == pdTRUE )
       {
           // We were able to obtain the semaphore and can now access the
           // shared resource.

           // ...

           // We have finished accessing the shared resource.  Release the
           // semaphore.
           xSemaphoreGive( xSemaphore );
       }
       else
       {
           // We could not obtain the semaphore and can therefore not access
           // the shared resource safely.
       }
   }
}
```

Return pdTRUE if the semaphore was obtained. pdFALSE if xBlockTime expired without the semaphore becoming available.

Parameters

- `xSemaphore`: A handle to the semaphore being taken - obtained when the semaphore was created.
- `xBlockTime`: The time in ticks to wait for the semaphore to become available. The macro portTICK_PERIOD_MS can be used to convert this to a real time. A block time of zero can be used to poll the semaphore. A block time of portMAX_DELAY can be used to block indefinitely (provided INCLUDE_vTaskSuspend is set to 1 in FreeRTOSConfig.h).

`xSemaphoreTakeRecursive`(xMutex, xBlockTime)

Macro to recursively obtain, or 'take', a mutex type semaphore. The mutex must have previously been created using a call to xSemaphoreCreateRecursiveMutex();

configUSE_RECURSIVE_MUTEXES must be set to 1 in FreeRTOSConfig.h for this macro to be available.

This macro must not be used on mutexes created using xSemaphoreCreateMutex().

A mutex used recursively can be 'taken' repeatedly by the owner. The mutex doesn't become available again until the owner has called xSemaphoreGiveRecursive() for each successful 'take' request. For example, if a task successfully 'takes' the same mutex 5 times then the mutex will not be available to any other task until it has also 'given' the mutex back exactly five times.

Example usage:

```
SemaphoreHandle_t xMutex = NULL;

// A task that creates a mutex.
void vATask( void * pvParameters )
{
   // Create the mutex to guard a shared resource.
   xMutex = xSemaphoreCreateRecursiveMutex();
}

// A task that uses the mutex.
void vAnotherTask( void * pvParameters )
{
   // ... Do other things.

   if( xMutex != NULL )
   {
       // See if we can obtain the mutex.  If the mutex is not available
       // wait 10 ticks to see if it becomes free.
       if( xSemaphoreTakeRecursive( xSemaphore, ( TickType_t ) 10 ) == pdTRUE )
       {
           // We were able to obtain the mutex and can now access the
           // shared resource.

           // ...
           // For some reason due to the nature of the code further calls to
           // xSemaphoreTakeRecursive() are made on the same mutex.  In real
           // code these would not be just sequential calls as this would make
           // no sense.  Instead the calls are likely to be buried inside
           // a more complex call structure.
           xSemaphoreTakeRecursive( xMutex, ( TickType_t ) 10 );
           xSemaphoreTakeRecursive( xMutex, ( TickType_t ) 10 );
```

(下页继续)

(续上页)

```
            // The mutex has now been 'taken' three times, so will not be
            // available to another task until it has also been given back
            // three times.  Again it is unlikely that real code would have
            // these calls sequentially, but instead buried in a more complex
            // call structure.  This is just for illustrative purposes.
            xSemaphoreGiveRecursive( xMutex );
            xSemaphoreGiveRecursive( xMutex );
            xSemaphoreGiveRecursive( xMutex );

            // Now the mutex can be taken by other tasks.
        }
        else
        {
            // We could not obtain the mutex and can therefore not access
            // the shared resource safely.
        }
    }
}
```

Return pdTRUE if the semaphore was obtained. pdFALSE if xBlockTime expired without the semaphore becoming available.

Parameters

- `xMutex`: A handle to the mutex being obtained. This is the handle returned by xSemaphoreCreateRecursiveMutex();
- `xBlockTime`: The time in ticks to wait for the semaphore to become available. The macro portTICK_PERIOD_MS can be used to convert this to a real time. A block time of zero can be used to poll the semaphore. If the task already owns the semaphore then xSemaphoreTakeRecursive() will return immediately no matter what the value of xBlockTime.

`xSemaphoreGive`(xSemaphore)

Macro to release a semaphore. The semaphore must have previously been created with a call to vSemaphoreCreateBinary(), xSemaphoreCreateMutex() or xSemaphoreCreateCounting(). and obtained using sSemaphoreTake().

This macro must not be used from an ISR. See xSemaphoreGiveFromISR () for an alternative which can be used from an ISR.

This macro must also not be used on semaphores created using xSemaphoreCreateRecursiveMutex().

Example usage:

```
SemaphoreHandle_t xSemaphore = NULL;

void vATask( void * pvParameters )
{
   // Create the semaphore to guard a shared resource.
   vSemaphoreCreateBinary( xSemaphore );

   if( xSemaphore != NULL )
   {
       if( xSemaphoreGive( xSemaphore ) != pdTRUE )
       {
           // We would expect this call to fail because we cannot give
           // a semaphore without first "taking" it!
       }

       // Obtain the semaphore - don't block if the semaphore is not
       // immediately available.
       if( xSemaphoreTake( xSemaphore, ( TickType_t ) 0 ) )
       {
           // We now have the semaphore and can access the shared resource.

           // ...

           // We have finished accessing the shared resource so can free the
           // semaphore.
           if( xSemaphoreGive( xSemaphore ) != pdTRUE )
           {
               // We would not expect this call to fail because we must have
               // obtained the semaphore to get here.
           }
       }
   }
}
```

Return pdTRUE if the semaphore was released. pdFALSE if an error occurred. Semaphores are implemented using queues. An error can occur if there is no space on the queue to post a message - indicating that the semaphore was not first obtained correctly.

Parameters

- `xSemaphore`: A handle to the semaphore being released. This is the handle returned when the semaphore was created.

`xSemaphoreGiveRecursive`(xMutex)

Macro to recursively release, or 'give', a mutex type semaphore. The mutex must have previously been created using a call to xSemaphoreCreateRecursiveMutex();

configUSE_RECURSIVE_MUTEXES must be set to 1 in FreeRTOSConfig.h for this macro to be available.

This macro must not be used on mutexes created using xSemaphoreCreateMutex().

A mutex used recursively can be 'taken' repeatedly by the owner. The mutex doesn't become available again until the owner has called xSemaphoreGiveRecursive() for each successful 'take' request. For example, if a task successfully 'takes' the same mutex 5 times then the mutex will not be available to any other task until it has also 'given' the mutex back exactly five times.

Example usage:

```
SemaphoreHandle_t xMutex = NULL;

// A task that creates a mutex.
void vATask( void * pvParameters )
{
   // Create the mutex to guard a shared resource.
   xMutex = xSemaphoreCreateRecursiveMutex();
}

// A task that uses the mutex.
void vAnotherTask( void * pvParameters )
{
   // ... Do other things.

   if( xMutex != NULL )
   {
       // See if we can obtain the mutex.  If the mutex is not available
       // wait 10 ticks to see if it becomes free.
       if( xSemaphoreTakeRecursive( xMutex, ( TickType_t ) 10 ) == pdTRUE )
       {
           // We were able to obtain the mutex and can now access the
           // shared resource.

           // ...
           // For some reason due to the nature of the code further calls to
           // xSemaphoreTakeRecursive() are made on the same mutex.  In real
           // code these would not be just sequential calls as this would make
           // no sense.  Instead the calls are likely to be buried inside
```

(下页继续)

(续上页)

```
            // a more complex call structure.
            xSemaphoreTakeRecursive( xMutex, ( TickType_t ) 10 );
            xSemaphoreTakeRecursive( xMutex, ( TickType_t ) 10 );

            // The mutex has now been 'taken' three times, so will not be
            // available to another task until it has also been given back
            // three times.  Again it is unlikely that real code would have
            // these calls sequentially, it would be more likely that the calls
            // to xSemaphoreGiveRecursive() would be called as a call stack
            // unwound.  This is just for demonstrative purposes.
            xSemaphoreGiveRecursive( xMutex );
            xSemaphoreGiveRecursive( xMutex );
            xSemaphoreGiveRecursive( xMutex );

            // Now the mutex can be taken by other tasks.
        }
        else
        {
            // We could not obtain the mutex and can therefore not access
            // the shared resource safely.
        }
    }
}
```

Return pdTRUE if the semaphore was given.

Parameters

- `xMutex`: A handle to the mutex being released, or 'given'. This is the handle returned by xSemaphoreCreateMutex();

xSemaphoreGiveFromISR(xSemaphore, pxHigherPriorityTaskWoken)

Macro to release a semaphore. The semaphore must have previously been created with a call to vSemaphoreCreateBinary() or xSemaphoreCreateCounting().

Mutex type semaphores (those created using a call to xSemaphoreCreateMutex()) must not be used with this macro.

This macro can be used from an ISR.

Example usage:

```
\#define LONG_TIME 0xffff
\#define TICKS_TO_WAIT 10
SemaphoreHandle_t xSemaphore = NULL;

// Repetitive task.
void vATask( void * pvParameters )
{
   for( ;; )
   {
       // We want this task to run every 10 ticks of a timer.  The semaphore
       // was created before this task was started.

       // Block waiting for the semaphore to become available.
       if( xSemaphoreTake( xSemaphore, LONG_TIME ) == pdTRUE )
       {
           // It is time to execute.

           // ...

           // We have finished our task.  Return to the top of the loop where
           // we will block on the semaphore until it is time to execute
           // again.  Note when using the semaphore for synchronisation with an
           // ISR in this manner there is no need to 'give' the semaphore back.
       }
   }
}

// Timer ISR
void vTimerISR( void * pvParameters )
{
static uint8_t ucLocalTickCount = 0;
static BaseType_t xHigherPriorityTaskWoken;

   // A timer tick has occurred.

   // ... Do other time functions.

   // Is it time for vATask () to run?
   xHigherPriorityTaskWoken = pdFALSE;
   ucLocalTickCount++;
```

(下页继续)

(续上页)

```
    if( ucLocalTickCount >= TICKS_TO_WAIT )
    {
        // Unblock the task by releasing the semaphore.
        xSemaphoreGiveFromISR( xSemaphore, &xHigherPriorityTaskWoken );

        // Reset the count so we release the semaphore again in 10 ticks time.
        ucLocalTickCount = 0;
    }

    if( xHigherPriorityTaskWoken != pdFALSE )
    {
        // We can force a context switch here.  Context switching from an
        // ISR uses port specific syntax.  Check the demo task for your port
        // to find the syntax required.
    }
}
```

Return pdTRUE if the semaphore was successfully given, otherwise errQUEUE_FULL.

Parameters

- `xSemaphore`: A handle to the semaphore being released. This is the handle returned when the semaphore was created.
- `pxHigherPriorityTaskWoken`: xSemaphoreGiveFromISR() will set *pxHigherPriorityTaskWoken to pdTRUE if giving the semaphore caused a task to unblock, and the unblocked task has a priority higher than the currently running task. If xSemaphoreGiveFromISR() sets this value to pdTRUE then a context switch should be requested before the interrupt is exited.

`xSemaphoreTakeFromISR`(xSemaphore, pxHigherPriorityTaskWoken)

Macro to take a semaphore from an ISR. The semaphore must have previously been created with a call to vSemaphoreCreateBinary() or xSemaphoreCreateCounting().

Mutex type semaphores (those created using a call to xSemaphoreCreateMutex()) must not be used with this macro.

This macro can be used from an ISR, however taking a semaphore from an ISR is not a common operation. It is likely to only be useful when taking a counting semaphore when an interrupt is obtaining an object from a resource pool (when the semaphore count indicates the number of resources available).

Return pdTRUE if the semaphore was successfully taken, otherwise pdFALSE

Parameters

- `xSemaphore`: A handle to the semaphore being taken. This is the handle returned when the semaphore was created.
- `pxHigherPriorityTaskWoken`: xSemaphoreTakeFromISR() will set *pxHigherPriorityTaskWoken to pdTRUE if taking the semaphore caused a task to unblock, and the unblocked task has a priority higher than the currently running task. If xSemaphoreTakeFromISR() sets this value to pdTRUE then a context switch should be requested before the interrupt is exited.

`xSemaphoreCreateMutex()`

Macro that implements a mutex semaphore by using the existing queue mechanism.

Internally, within the FreeRTOS implementation, mutex semaphores use a block of memory, in which the mutex structure is stored. If a mutex is created using xSemaphoreCreateMutex() then the required memory is automatically dynamically allocated inside the xSemaphoreCreateMutex() function. (see http://www.freertos.org/a00111.html). If a mutex is created using xSemaphoreCreateMutexStatic() then the application writer must provided the memory. xSemaphoreCreateMutexStatic() therefore allows a mutex to be created without using any dynamic memory allocation.

Mutexes created using this function can be accessed using the xSemaphoreTake() and xSemaphoreGive() macros. The xSemaphoreTakeRecursive() and xSemaphoreGiveRecursive() macros must not be used.

This type of semaphore uses a priority inheritance mechanism so a task 'taking' a semaphore MUST ALWAYS 'give' the semaphore back once the semaphore it is no longer required.

Mutex type semaphores cannot be used from within interrupt service routines.

See vSemaphoreCreateBinary() for an alternative implementation that can be used for pure synchronisation (where one task or interrupt always 'gives' the semaphore and another always 'takes' the semaphore) and from within interrupt service routines.

Example usage:

```
SemaphoreHandle_t xSemaphore;

void vATask( void * pvParameters )
{
   // Semaphore cannot be used before a call to xSemaphoreCreateMutex().
   // This is a macro so pass the variable in directly.
   xSemaphore = xSemaphoreCreateMutex();

   if( xSemaphore != NULL )
   {
```

(下页继续)

(续上页)

```
        // The semaphore was created successfully.
        // The semaphore can now be used.
    }
}
```

Return If the mutex was successfully created then a handle to the created semaphore is returned. If there was not enough heap to allocate the mutex data structures then NULL is returned.

`xSemaphoreCreateMutexStatic`(pxMutexBuffer)

Creates a new mutex type semaphore instance, and returns a handle by which the new mutex can be referenced.

Internally, within the FreeRTOS implementation, mutex semaphores use a block of memory, in which the mutex structure is stored. If a mutex is created using xSemaphoreCreateMutex() then the required memory is automatically dynamically allocated inside the xSemaphoreCreateMutex() function. (see http://www.freertos.org/a00111.html). If a mutex is created using xSemaphoreCreateMutexStatic() then the application writer must provided the memory. xSemaphoreCreateMutexStatic() therefore allows a mutex to be created without using any dynamic memory allocation.

Mutexes created using this function can be accessed using the xSemaphoreTake() and xSemaphoreGive() macros. The xSemaphoreTakeRecursive() and xSemaphoreGiveRecursive() macros must not be used.

This type of semaphore uses a priority inheritance mechanism so a task 'taking' a semaphore MUST ALWAYS 'give' the semaphore back once the semaphore it is no longer required.

Mutex type semaphores cannot be used from within interrupt service routines.

See xSemaphoreCreateBinary() for an alternative implementation that can be used for pure synchronisation (where one task or interrupt always 'gives' the semaphore and another always 'takes' the semaphore) and from within interrupt service routines.

Example usage:

```
SemaphoreHandle_t xSemaphore;
StaticSemaphore_t xMutexBuffer;

void vATask( void * pvParameters )
{
   // A mutex cannot be used before it has been created.  xMutexBuffer is
   // into xSemaphoreCreateMutexStatic() so no dynamic memory allocation is
   // attempted.
   xSemaphore = xSemaphoreCreateMutexStatic( &xMutexBuffer );
```

(下页继续)

(续上页)

```
    // As no dynamic memory allocation was performed, xSemaphore cannot be NULL,
    // so there is no need to check it.
}
```

Return If the mutex was successfully created then a handle to the created mutex is returned. If pxMutexBuffer was NULL then NULL is returned.

Parameters

- `pxMutexBuffer`: Must point to a variable of type StaticSemaphore_t, which will be used to hold the mutex' s data structure, removing the need for the memory to be allocated dynamically.

`xSemaphoreCreateRecursiveMutex()`

Creates a new recursive mutex type semaphore instance, and returns a handle by which the new recursive mutex can be referenced.

Internally, within the FreeRTOS implementation, recursive mutexs use a block of memory, in which the mutex structure is stored. If a recursive mutex is created using xSemaphoreCreateRecursiveMutex() then the required memory is automatically dynamically allocated inside the xSemaphoreCreateRecursiveMutex() function. (see http://www.freertos.org/a00111.html). If a recursive mutex is created using xSemaphoreCreateRecursiveMutexStatic() then the application writer must provide the memory that will get used by the mutex. xSemaphoreCreateRecursiveMutexStatic() therefore allows a recursive mutex to be created without using any dynamic memory allocation.

Mutexes created using this macro can be accessed using the xSemaphoreTakeRecursive() and xSemaphoreGiveRecursive() macros. The xSemaphoreTake() and xSemaphoreGive() macros must not be used.

A mutex used recursively can be 'taken' repeatedly by the owner. The mutex doesn't become available again until the owner has called xSemaphoreGiveRecursive() for each successful 'take' request. For example, if a task successfully 'takes' the same mutex 5 times then the mutex will not be available to any other task until it has also 'given' the mutex back exactly five times.

This type of semaphore uses a priority inheritance mechanism so a task 'taking' a semaphore MUST ALWAYS 'give' the semaphore back once the semaphore it is no longer required.

Mutex type semaphores cannot be used from within interrupt service routines.

See vSemaphoreCreateBinary() for an alternative implementation that can be used for pure synchronisation (where one task or interrupt always 'gives' the semaphore and another always 'takes' the semaphore) and from within interrupt service routines.

Example usage:

```
SemaphoreHandle_t xSemaphore;

void vATask( void * pvParameters )
{
   // Semaphore cannot be used before a call to xSemaphoreCreateMutex().
   // This is a macro so pass the variable in directly.
   xSemaphore = xSemaphoreCreateRecursiveMutex();

   if( xSemaphore != NULL )
   {
       // The semaphore was created successfully.
       // The semaphore can now be used.
   }
}
```

Return xSemaphore Handle to the created mutex semaphore. Should be of type SemaphoreHandle_t.

xSemaphoreCreateRecursiveMutexStatic(pxStaticSemaphore)

Creates a new recursive mutex type semaphore instance, and returns a handle by which the new recursive mutex can be referenced.

Internally, within the FreeRTOS implementation, recursive mutexs use a block of memory, in which the mutex structure is stored. If a recursive mutex is created using xSemaphoreCreateRecursiveMutex() then the required memory is automatically dynamically allocated inside the xSemaphoreCreateRecursiveMutex() function. (see http://www.freertos.org/a00111.html). If a recursive mutex is created using xSemaphoreCreateRecursiveMutexStatic() then the application writer must provide the memory that will get used by the mutex. xSemaphoreCreateRecursiveMutexStatic() therefore allows a recursive mutex to be created without using any dynamic memory allocation.

Mutexes created using this macro can be accessed using the xSemaphoreTakeRecursive() and xSemaphoreGiveRecursive() macros. The xSemaphoreTake() and xSemaphoreGive() macros must not be used.

A mutex used recursively can be 'taken' repeatedly by the owner. The mutex doesn't become available again until the owner has called xSemaphoreGiveRecursive() for each successful 'take' request. For example, if a task successfully 'takes' the same mutex 5 times then the mutex will not be available to any other task until it has also 'given' the mutex back exactly five times.

This type of semaphore uses a priority inheritance mechanism so a task 'taking' a semaphore MUST ALWAYS 'give' the semaphore back once the semaphore it is no longer required.

Mutex type semaphores cannot be used from within interrupt service routines.

See xSemaphoreCreateBinary() for an alternative implementation that can be used for pure synchronisation (where one task or interrupt always 'gives' the semaphore and another always 'takes' the

semaphore) and from within interrupt service routines.

Example usage:

```
SemaphoreHandle_t xSemaphore;
StaticSemaphore_t xMutexBuffer;

void vATask( void * pvParameters )
{
   // A recursive semaphore cannot be used before it is created.  Here a
   // recursive mutex is created using xSemaphoreCreateRecursiveMutexStatic().
   // The address of xMutexBuffer is passed into the function, and will hold
   // the mutexes data structures - so no dynamic memory allocation will be
   // attempted.
   xSemaphore = xSemaphoreCreateRecursiveMutexStatic( &xMutexBuffer );

   // As no dynamic memory allocation was performed, xSemaphore cannot be NULL,
   // so there is no need to check it.
}
```

Return If the recursive mutex was successfully created then a handle to the created recursive mutex is returned. If pxMutexBuffer was NULL then NULL is returned.

Parameters

- `pxStaticSemaphore`: Must point to a variable of type StaticSemaphore_t, which will then be used to hold the recursive mutex' s data structure, removing the need for the memory to be allocated dynamically.

`xSemaphoreCreateCounting`(uxMaxCount, uxInitialCount)

Creates a new counting semaphore instance, and returns a handle by which the new counting semaphore can be referenced.

In many usage scenarios it is faster and more memory efficient to use a direct to task notification in place of a counting semaphore! http://www.freertos.org/RTOS-task-notifications.html

Internally, within the FreeRTOS implementation, counting semaphores use a block of memory, in which the counting semaphore structure is stored. If a counting semaphore is created using xSemaphoreCreateCounting() then the required memory is automatically dynamically allocated inside the xSemaphoreCreateCounting() function. (see http://www.freertos.org/a00111.html). If a counting semaphore is created using xSemaphoreCreateCountingStatic() then the application writer can instead optionally provide the memory that will get used by the counting semaphore. xSemaphoreCreateCountingStatic() therefore allows a counting semaphore to be created without using any dynamic memory allocation.

Counting semaphores are typically used for two things:

1) Counting events.

In this usage scenario an event handler will 'give' a semaphore each time an event occurs (incrementing the semaphore count value), and a handler task will 'take' a semaphore each time it processes an event (decrementing the semaphore count value). The count value is therefore the difference between the number of events that have occurred and the number that have been processed. In this case it is desirable for the initial count value to be zero.

2) Resource management.

In this usage scenario the count value indicates the number of resources available. To obtain control of a resource a task must first obtain a semaphore - decrementing the semaphore count value. When the count value reaches zero there are no free resources. When a task finishes with the resource it 'gives' the semaphore back - incrementing the semaphore count value. In this case it is desirable for the initial count value to be equal to the maximum count value, indicating that all resources are free.

Example usage:

```
SemaphoreHandle_t xSemaphore;

void vATask( void * pvParameters )
{
SemaphoreHandle_t xSemaphore = NULL;

   // Semaphore cannot be used before a call to xSemaphoreCreateCounting().
   // The max value to which the semaphore can count should be 10, and the
   // initial value assigned to the count should be 0.
   xSemaphore = xSemaphoreCreateCounting( 10, 0 );

   if( xSemaphore != NULL )
   {
       // The semaphore was created successfully.
       // The semaphore can now be used.
   }
}
```

Return Handle to the created semaphore. Null if the semaphore could not be created.

Parameters

- `uxMaxCount`: The maximum count value that can be reached. When the semaphore reaches this value it can no longer be 'given'.
- `uxInitialCount`: The count value assigned to the semaphore when it is created.

`xSemaphoreCreateCountingStatic`(uxMaxCount, uxInitialCount, pxSemaphoreBuffer)

Creates a new counting semaphore instance, and returns a handle by which the new counting semaphore can be referenced.

In many usage scenarios it is faster and more memory efficient to use a direct to task notification in place of a counting semaphore! http://www.freertos.org/RTOS-task-notifications.html

Internally, within the FreeRTOS implementation, counting semaphores use a block of memory, in which the counting semaphore structure is stored. If a counting semaphore is created using xSemaphoreCreateCounting() then the required memory is automatically dynamically allocated inside the xSemaphoreCreateCounting() function. (see http://www.freertos.org/a00111.html). If a counting semaphore is created using xSemaphoreCreateCountingStatic() then the application writer must provide the memory. xSemaphoreCreateCountingStatic() therefore allows a counting semaphore to be created without using any dynamic memory allocation.

Counting semaphores are typically used for two things:

1) Counting events.

In this usage scenario an event handler will 'give' a semaphore each time an event occurs (incrementing the semaphore count value), and a handler task will 'take' a semaphore each time it processes an event (decrementing the semaphore count value). The count value is therefore the difference between the number of events that have occurred and the number that have been processed. In this case it is desirable for the initial count value to be zero.

2) Resource management.

In this usage scenario the count value indicates the number of resources available. To obtain control of a resource a task must first obtain a semaphore - decrementing the semaphore count value. When the count value reaches zero there are no free resources. When a task finishes with the resource it 'gives' the semaphore back - incrementing the semaphore count value. In this case it is desirable for the initial count value to be equal to the maximum count value, indicating that all resources are free.

Example usage:

```
SemaphoreHandle_t xSemaphore;
StaticSemaphore_t xSemaphoreBuffer;

void vATask( void * pvParameters )
{
SemaphoreHandle_t xSemaphore = NULL;

   // Counting semaphore cannot be used before they have been created.  Create
   // a counting semaphore using xSemaphoreCreateCountingStatic().  The max
   // value to which the semaphore can count is 10, and the initial value
   // assigned to the count will be 0.  The address of xSemaphoreBuffer is
   // passed in and will be used to hold the semaphore structure, so no dynamic
```

(下页继续)

(续上页)

```
    // memory allocation will be used.
    xSemaphore = xSemaphoreCreateCounting( 10, 0, &xSemaphoreBuffer );

    // No memory allocation was attempted so xSemaphore cannot be NULL, so there
    // is no need to check its value.
}
```

Return If the counting semaphore was successfully created then a handle to the created counting semaphore is returned. If pxSemaphoreBuffer was NULL then NULL is returned.

Parameters

- `uxMaxCount`: The maximum count value that can be reached. When the semaphore reaches this value it can no longer be ‘given’.
- `uxInitialCount`: The count value assigned to the semaphore when it is created.
- `pxSemaphoreBuffer`: Must point to a variable of type StaticSemaphore_t, which will then be used to hold the semaphore’s data structure, removing the need for the memory to be allocated dynamically.

`vSemaphoreDelete`(xSemaphore)

Delete a semaphore. This function must be used with care. For example, do not delete a mutex type semaphore if the mutex is held by a task.

Parameters

- `xSemaphore`: A handle to the semaphore to be deleted.

`xSemaphoreGetMutexHolder`(xSemaphore)

If xMutex is indeed a mutex type semaphore, return the current mutex holder. If xMutex is not a mutex type semaphore, or the mutex is available (not held by a task), return NULL.

Note: This is a good way of determining if the calling task is the mutex holder, but not a good way of determining the identity of the mutex holder as the holder may change between the function exiting and the returned value being tested.

`uxSemaphoreGetCount`(xSemaphore)

If the semaphore is a counting semaphore then uxSemaphoreGetCount() returns its current count value. If the semaphore is a binary semaphore then uxSemaphoreGetCount() returns 1 if the semaphore is available, and 0 if the semaphore is not available.

Type Definitions

`typedef` *QueueHandle_t* `SemaphoreHandle_t`

Timer API

Header File

- freertos/include/freertos/timers.h

Functions

TimerHandle_t **xTimerCreate**(**const** char ***const** *pcTimerName*, **const** TickType_t *xTimerPeriodInTicks*, **const** UBaseType_t *uxAutoReload*, void ***const** *pvTimerID*, *TimerCallbackFunction_t pxCallbackFunction*)

Creates a new software timer instance, and returns a handle by which the created software timer can be referenced.

Internally, within the FreeRTOS implementation, software timers use a block of memory, in which the timer data structure is stored. If a software timer is created using xTimerCreate() then the required memory is automatically dynamically allocated inside the xTimerCreate() function. (see http://www.freertos.org/a00111.html). If a software timer is created using xTimerCreateStatic() then the application writer must provide the memory that will get used by the software timer. xTimerCreateStatic() therefore allows a software timer to be created without using any dynamic memory allocation.

Timers are created in the dormant state. The xTimerStart(), xTimerReset(), xTimerStartFromISR(), xTimerResetFromISR(), xTimerChangePeriod() and xTimerChangePeriodFromISR() API functions can all be used to transition a timer into the active state.

Example usage:

```
#define NUM_TIMERS 5

// An array to hold handles to the created timers.
TimerHandle_t xTimers[ NUM_TIMERS ];

// An array to hold a count of the number of times each timer expires.
int32_t lExpireCounters[ NUM_TIMERS ] = { 0 };

// Define a callback function that will be used by multiple timer instances.
// The callback function does nothing but count the number of times the
// associated timer expires, and stop the timer once the timer has expired
// 10 times.
void vTimerCallback( TimerHandle_t pxTimer )
{
int32_t lArrayIndex;
```

(下页继续)

(续上页)

```
const int32_t xMaxExpiryCountBeforeStopping = 10;

       // Optionally do something if the pxTimer parameter is NULL.
       configASSERT( pxTimer );

    // Which timer expired?
    lArrayIndex = ( int32_t ) pvTimerGetTimerID( pxTimer );

    // Increment the number of times that pxTimer has expired.
    lExpireCounters[ lArrayIndex ] += 1;

    // If the timer has expired 10 times then stop it from running.
    if( lExpireCounters[ lArrayIndex ] == xMaxExpiryCountBeforeStopping )
    {
        // Do not use a block time if calling a timer API function from a
        // timer callback function, as doing so could cause a deadlock!
        xTimerStop( pxTimer, 0 );
    }
}

void main( void )
{
int32_t x;

    // Create then start some timers.  Starting the timers before the scheduler
    // has been started means the timers will start running immediately that
    // the scheduler starts.
    for( x = 0; x < NUM_TIMERS; x++ )
    {
        xTimers[ x ] = xTimerCreate(    "Timer",       // Just a text name, not␣
↪used by the kernel.
                                        ( 100 * x ),   // The timer period in ticks.
                                        pdTRUE,        // The timers will auto-
↪reload themselves when they expire.
                                        ( void * ) x,  // Assign each timer a␣
↪unique id equal to its array index.
                                        vTimerCallback // Each timer calls the same␣
↪callback when it expires.
                                    );
```

(下页继续)

(续上页)

```
        if( xTimers[ x ] == NULL )
        {
            // The timer was not created.
        }
        else
        {
            // Start the timer.  No block time is specified, and even if one was
            // it would be ignored because the scheduler has not yet been
            // started.
            if( xTimerStart( xTimers[ x ], 0 ) != pdPASS )
            {
                // The timer could not be set into the Active state.
            }
        }
    }

    // ...
    // Create tasks here.
    // ...

    // Starting the scheduler will start the timers running as they have already
    // been set into the active state.
    vTaskStartScheduler();

    // Should not reach here.
    for( ;; );
}
```

Return If the timer is successfully created then a handle to the newly created timer is returned. If the timer cannot be created (because either there is insufficient FreeRTOS heap remaining to allocate the timer structures, or the timer period was set to 0) then NULL is returned.

Parameters

- `pcTimerName`: A text name that is assigned to the timer. This is done purely to assist debugging. The kernel itself only ever references a timer by its handle, and never by its name.
- `xTimerPeriodInTicks`: The timer period. The time is defined in tick periods so the constant portTICK_PERIOD_MS can be used to convert a time that has been specified in milliseconds. For example, if the timer must expire after 100 ticks, then xTimerPeriodInTicks should be set to 100. Alternatively, if the timer must expire after 500ms, then xPeriod can be set to

(500 / portTICK_PERIOD_MS) provided configTICK_RATE_HZ is less than or equal to 1000.

- `uxAutoReload`: If uxAutoReload is set to pdTRUE then the timer will expire repeatedly with a frequency set by the xTimerPeriodInTicks parameter. If uxAutoReload is set to pdFALSE then the timer will be a one-shot timer and enter the dormant state after it expires.
- `pvTimerID`: An identifier that is assigned to the timer being created. Typically this would be used in the timer callback function to identify which timer expired when the same callback function is assigned to more than one timer.
- `pxCallbackFunction`: The function to call when the timer expires. Callback functions must have the prototype defined by TimerCallbackFunction_t, which is "void vCallbackFunction(TimerHandle_t xTimer);" .

TimerHandle_t **xTimerCreateStatic**(**const** char ***const** *pcTimerName*, **const** TickType_t *xTimerPeriodInTicks*, **const** UBaseType_t *uxAutoReload*, void ***const** *pvTimerID*, *TimerCallbackFunction_t* *pxCallbackFunction*, StaticTimer_t **pxTimerBuffer*)

Creates a new software timer instance, and returns a handle by which the created software timer can be referenced.

Internally, within the FreeRTOS implementation, software timers use a block of memory, in which the timer data structure is stored. If a software timer is created using xTimerCreate() then the required memory is automatically dynamically allocated inside the xTimerCreate() function. (see http://www.freertos.org/a00111.html). If a software timer is created using xTimerCreateStatic() then the application writer must provide the memory that will get used by the software timer. xTimerCreateStatic() therefore allows a software timer to be created without using any dynamic memory allocation.

Timers are created in the dormant state. The xTimerStart(), xTimerReset(), xTimerStartFromISR(), xTimerResetFromISR(), xTimerChangePeriod() and xTimerChangePeriodFromISR() API functions can all be used to transition a timer into the active state.

Example usage:

```
// The buffer used to hold the software timer's data structure.
static StaticTimer_t xTimerBuffer;

// A variable that will be incremented by the software timer's callback
// function.
UBaseType_t uxVariableToIncrement = 0;

// A software timer callback function that increments a variable passed to
// it when the software timer was created.  After the 5th increment the
```

(下页继续)

(续上页)

```
// callback function stops the software timer.
static void prvTimerCallback( TimerHandle_t xExpiredTimer )
{
UBaseType_t *puxVariableToIncrement;
BaseType_t xReturned;

    // Obtain the address of the variable to increment from the timer ID.
    puxVariableToIncrement = ( UBaseType_t * ) pvTimerGetTimerID( xExpiredTimer );

    // Increment the variable to show the timer callback has executed.
    ( *puxVariableToIncrement )++;

    // If this callback has executed the required number of times, stop the
    // timer.
    if( *puxVariableToIncrement == 5 )
    {
        // This is called from a timer callback so must not block.
        xTimerStop( xExpiredTimer, staticDONT_BLOCK );
    }
}



void main( void )
{
    // Create the software time.  xTimerCreateStatic() has an extra parameter
    // than the normal xTimerCreate() API function.  The parameter is a pointer
    // to the StaticTimer_t structure that will hold the software timer
    // structure.  If the parameter is passed as NULL then the structure will be
    // allocated dynamically, just as if xTimerCreate() had been called.
    xTimer = xTimerCreateStatic( "T1",             // Text name for the task. ␣
↪Helps debugging only.  Not used by FreeRTOS.
                                 xTimerPeriod,     // The period of the timer in␣
↪ticks.
                                 pdTRUE,           // This is an auto-reload timer.
                                 ( void * ) &uxVariableToIncrement,    // A␣
↪variable incremented by the software timer's callback function
                                 prvTimerCallback, // The function to execute when␣
↪the timer expires.
                                 &xTimerBuffer );  // The buffer that will hold the␣
↪software timer structure.
```

(下页继续)

(续上页)

```
    // The scheduler has not started yet so a block time is not used.
    xReturned = xTimerStart( xTimer, 0 );

    // ...
    // Create tasks here.
    // ...

    // Starting the scheduler will start the timers running as they have already
    // been set into the active state.
    vTaskStartScheduler();

    // Should not reach here.
    for( ;; );
}
```

Return If the timer is created then a handle to the created timer is returned. If pxTimerBuffer was NULL then NULL is returned.

Parameters

- `pcTimerName`: A text name that is assigned to the timer. This is done purely to assist debugging. The kernel itself only ever references a timer by its handle, and never by its name.
- `xTimerPeriodInTicks`: The timer period. The time is defined in tick periods so the constant portTICK_PERIOD_MS can be used to convert a time that has been specified in milliseconds. For example, if the timer must expire after 100 ticks, then xTimerPeriodInTicks should be set to 100. Alternatively, if the timer must expire after 500ms, then xPeriod can be set to (500 / portTICK_PERIOD_MS) provided configTICK_RATE_HZ is less than or equal to 1000.
- `uxAutoReload`: If uxAutoReload is set to pdTRUE then the timer will expire repeatedly with a frequency set by the xTimerPeriodInTicks parameter. If uxAutoReload is set to pdFALSE then the timer will be a one-shot timer and enter the dormant state after it expires.
- `pvTimerID`: An identifier that is assigned to the timer being created. Typically this would be used in the timer callback function to identify which timer expired when the same callback function is assigned to more than one timer.
- `pxCallbackFunction`: The function to call when the timer expires. Callback functions must have the prototype defined by TimerCallbackFunction_t, which is "void vCallbackFunction(TimerHandle_t xTimer);" .

- `pxTimerBuffer`: Must point to a variable of type StaticTimer_t, which will be then be used to hold the software timer's data structures, removing the need for the memory to be allocated dynamically.

void *`pvTimerGetTimerID`(*TimerHandle_t xTimer*)

Returns the ID assigned to the timer.

IDs are assigned to timers using the pvTimerID parameter of the call to xTimerCreated() that was used to create the timer.

If the same callback function is assigned to multiple timers then the timer ID can be used within the callback function to identify which timer actually expired.

Example usage:

Return The ID assigned to the timer being queried.

Parameters

- `xTimer`: The timer being queried.

See the xTimerCreate() API function example usage scenario.

void `vTimerSetTimerID`(*TimerHandle_t xTimer*, void **pvNewID*)

Sets the ID assigned to the timer.

IDs are assigned to timers using the pvTimerID parameter of the call to xTimerCreated() that was used to create the timer.

If the same callback function is assigned to multiple timers then the timer ID can be used as time specific (timer local) storage.

Example usage:

Parameters

- `xTimer`: The timer being updated.
- `pvNewID`: The ID to assign to the timer.

See the xTimerCreate() API function example usage scenario.

BaseType_t `xTimerIsTimerActive`(*TimerHandle_t xTimer*)

Queries a timer to see if it is active or dormant.

A timer will be dormant if:

```
1) It has been created but not started, or

2) It is an expired one-shot timer that has not been restarted.
```

Timers are created in the dormant state. The xTimerStart(), xTimerReset(), xTimerStartFromISR(), xTimerResetFromISR(), xTimerChangePeriod() and xTimerChangePeriodFromISR() API functions can all be used to transition a timer into the active state.

Example usage:

```
// This function assumes xTimer has already been created.
void vAFunction( TimerHandle_t xTimer )
{
    if( xTimerIsTimerActive( xTimer ) != pdFALSE ) // or more simply and␣
↪equivalently "if( xTimerIsTimerActive( xTimer ) )"
    {
        // xTimer is active, do something.
    }
    else
    {
        // xTimer is not active, do something else.
    }
}
```

Return pdFALSE will be returned if the timer is dormant. A value other than pdFALSE will be returned if the timer is active.

Parameters

- `xTimer`: The timer being queried.

TaskHandle_t **xTimerGetTimerDaemonTaskHandle**(void)

xTimerGetTimerDaemonTaskHandle() is only available if INCLUDE_xTimerGetTimerDaemonTaskHandle is set to 1 in FreeRTOSConfig.h.

Simply returns the handle of the timer service/daemon task. It it not valid to call xTimerGetTimerDaemonTaskHandle() before the scheduler has been started.

TickType_t **xTimerGetPeriod**(*TimerHandle_t xTimer*)

Returns the period of a timer.

Return The period of the timer in ticks.

Parameters

- `xTimer`: The handle of the timer being queried.

TickType_t **xTimerGetExpiryTime**(*TimerHandle_t xTimer*)

Returns the time in ticks at which the timer will expire. If this is less than the current tick count then the expiry time has overflowed from the current time.

Return If the timer is running then the time in ticks at which the timer will next expire is returned. If the timer is not running then the return value is undefined.

Parameters

- `xTimer`: The handle of the timer being queried.

BaseType_t **xTimerPendFunctionCallFromISR**(*PendedFunction_t xFunctionToPend*, void **pvParameter1*, uint32_t *ulParameter2*, BaseType_t **pxHigherPriorityTaskWoken*)

Used from application interrupt service routines to defer the execution of a function to the RTOS daemon task (the timer service task, hence this function is implemented in timers.c and is prefixed with 'Timer').

Ideally an interrupt service routine (ISR) is kept as short as possible, but sometimes an ISR either has a lot of processing to do, or needs to perform processing that is not deterministic. In these cases xTimerPendFunctionCallFromISR() can be used to defer processing of a function to the RTOS daemon task.

A mechanism is provided that allows the interrupt to return directly to the task that will subsequently execute the pended callback function. This allows the callback function to execute contiguously in time with the interrupt - just as if the callback had executed in the interrupt itself.

Example usage:

```
// The callback function that will execute in the context of the daemon task.
// Note callback functions must all use this same prototype.
void vProcessInterface( void *pvParameter1, uint32_t ulParameter2 )
{
   BaseType_t xInterfaceToService;

   // The interface that requires servicing is passed in the second
    // parameter.  The first parameter is not used in this case.
   xInterfaceToService = ( BaseType_t ) ulParameter2;

   // ...Perform the processing here...
}

// An ISR that receives data packets from multiple interfaces
void vAnISR( void )
{
   BaseType_t xInterfaceToService, xHigherPriorityTaskWoken;

   // Query the hardware to determine which interface needs processing.
   xInterfaceToService = prvCheckInterfaces();
```

(下页继续)

(续上页)

```
    // The actual processing is to be deferred to a task.  Request the
    // vProcessInterface() callback function is executed, passing in the
    // number of the interface that needs processing.  The interface to
    // service is passed in the second parameter.  The first parameter is
    // not used in this case.
    xHigherPriorityTaskWoken = pdFALSE;
    xTimerPendFunctionCallFromISR( vProcessInterface, NULL, ( uint32_t )␣
↪xInterfaceToService, &xHigherPriorityTaskWoken );

    // If xHigherPriorityTaskWoken is now set to pdTRUE then a context
    // switch should be requested.  The macro used is port specific and will
    // be either portYIELD_FROM_ISR() or portEND_SWITCHING_ISR() - refer to
    // the documentation page for the port being used.
    portYIELD_FROM_ISR( xHigherPriorityTaskWoken );

}
```

Return pdPASS is returned if the message was successfully sent to the timer daemon task, otherwise pdFALSE is returned.

Parameters

- `xFunctionToPend`: The function to execute from the timer service/ daemon task. The function must conform to the PendedFunction_t prototype.
- `pvParameter1`: The value of the callback function' s first parameter. The parameter has a void * type to allow it to be used to pass any type. For example, unsigned longs can be cast to a void *, or the void * can be used to point to a structure.
- `ulParameter2`: The value of the callback function' s second parameter.
- `pxHigherPriorityTaskWoken`: As mentioned above, calling this function will result in a message being sent to the timer daemon task. If the priority of the timer daemon task (which is set using configTIMER_TASK_PRIORITY in FreeRTOSConfig.h) is higher than the priority of the currently running task (the task the interrupt interrupted) then *pxHigherPriorityTaskWoken will be set to pdTRUE within xTimerPendFunctionCallFromISR(), indicating that a context switch should be requested before the interrupt exits. For that reason *pxHigherPriorityTaskWoken must be initialised to pdFALSE. See the example code below.

BaseType_t **xTimerPendFunctionCall**(*PendedFunction_t xFunctionToPend*, void **pvParameter1*, uint32_t *ulParameter2*, TickType_t *xTicksToWait*)

Used to defer the execution of a function to the RTOS daemon task (the timer service task, hence this function is implemented in timers.c and is prefixed with 'Timer').

Return pdPASS is returned if the message was successfully sent to the timer daemon task, otherwise pdFALSE is returned.

Parameters

- `xFunctionToPend`: The function to execute from the timer service/ daemon task. The function must conform to the PendedFunction_t prototype.
- `pvParameter1`: The value of the callback function' s first parameter. The parameter has a void * type to allow it to be used to pass any type. For example, unsigned longs can be cast to a void *, or the void * can be used to point to a structure.
- `ulParameter2`: The value of the callback function' s second parameter.
- `xTicksToWait`: Calling this function will result in a message being sent to the timer daemon task on a queue. xTicksToWait is the amount of time the calling task should remain in the Blocked state (so not using any processing time) for space to become available on the timer queue if the queue is found to be full.

`const` char *`pcTimerGetTimerName`(*TimerHandle_t xTimer*)

Returns the name that was assigned to a timer when the timer was created.

Return The name assigned to the timer specified by the xTimer parameter.

Parameters

- `xTimer`: The handle of the timer being queried.

Macros

`tmrCOMMAND_EXECUTE_CALLBACK_FROM_ISR`

`tmrCOMMAND_EXECUTE_CALLBACK`

`tmrCOMMAND_START_DONT_TRACE`

`tmrCOMMAND_START`

`tmrCOMMAND_RESET`

`tmrCOMMAND_STOP`

`tmrCOMMAND_CHANGE_PERIOD`

`tmrCOMMAND_DELETE`

`tmrFIRST_FROM_ISR_COMMAND`

`tmrCOMMAND_START_FROM_ISR`

`tmrCOMMAND_RESET_FROM_ISR`

`tmrCOMMAND_STOP_FROM_ISR`

`tmrCOMMAND_CHANGE_PERIOD_FROM_ISR`

`xTimerStart`(xTimer, xTicksToWait)

Timer functionality is provided by a timer service/daemon task. Many of the public FreeRTOS timer API functions send commands to the timer service task through a queue called the timer command queue. The timer command queue is private to the kernel itself and is not directly accessible to application code. The length of the timer command queue is set by the configTIMER_QUEUE_LENGTH configuration constant.

xTimerStart() starts a timer that was previously created using the xTimerCreate() API function. If the timer had already been started and was already in the active state, then xTimerStart() has equivalent functionality to the xTimerReset() API function.

Starting a timer ensures the timer is in the active state. If the timer is not stopped, deleted, or reset in the mean time, the callback function associated with the timer will get called 'n' ticks after xTimerStart() was called, where 'n' is the timers defined period.

It is valid to call xTimerStart() before the scheduler has been started, but when this is done the timer will not actually start until the scheduler is started, and the timers expiry time will be relative to when the scheduler is started, not relative to when xTimerStart() was called.

The configUSE_TIMERS configuration constant must be set to 1 for xTimerStart() to be available.

Example usage:

Return pdFAIL will be returned if the start command could not be sent to the timer command queue even after xTicksToWait ticks had passed. pdPASS will be returned if the command was successfully sent to the timer command queue. When the command is actually processed will depend on the priority of the timer service/daemon task relative to other tasks in the system, although the timers expiry time is relative to when xTimerStart() is actually called. The timer service/daemon task priority is set by the configTIMER_TASK_PRIORITY configuration constant.

Parameters

- `xTimer`: The handle of the timer being started/restarted.
- `xTicksToWait`: Specifies the time, in ticks, that the calling task should be held in the Blocked state to wait for the start command to be successfully sent to the timer command queue, should the queue already be full when xTimerStart() was called. xTicksToWait is ignored if xTimerStart() is called before the scheduler is started.

See the xTimerCreate() API function example usage scenario.

`xTimerStop`(xTimer, xTicksToWait)

Timer functionality is provided by a timer service/daemon task. Many of the public FreeRTOS timer API functions send commands to the timer service task through a queue called the timer command queue. The timer command queue is private to the kernel itself and is not directly accessible to application code. The length of the timer command queue is set by the configTIMER_QUEUE_LENGTH configuration constant.

xTimerStop() stops a timer that was previously started using either of the The xTimerStart(), xTimerReset(), xTimerStartFromISR(), xTimerResetFromISR(), xTimerChangePeriod() or xTimerChangePeriodFromISR() API functions.

Stopping a timer ensures the timer is not in the active state.

The configUSE_TIMERS configuration constant must be set to 1 for xTimerStop() to be available.

Example usage:

Return pdFAIL will be returned if the stop command could not be sent to the timer command queue even after xTicksToWait ticks had passed. pdPASS will be returned if the command was successfully sent to the timer command queue. When the command is actually processed will depend on the priority of the timer service/daemon task relative to other tasks in the system. The timer service/daemon task priority is set by the configTIMER_TASK_PRIORITY configuration constant.

Parameters

- `xTimer`: The handle of the timer being stopped.
- `xTicksToWait`: Specifies the time, in ticks, that the calling task should be held in the Blocked state to wait for the stop command to be successfully sent to the timer command queue, should the queue already be full when xTimerStop() was called. xTicksToWait is ignored if xTimerStop() is called before the scheduler is started.

See the xTimerCreate() API function example usage scenario.

xTimerChangePeriod(xTimer, xNewPeriod, xTicksToWait)

Timer functionality is provided by a timer service/daemon task. Many of the public FreeRTOS timer API functions send commands to the timer service task through a queue called the timer command queue. The timer command queue is private to the kernel itself and is not directly accessible to application code. The length of the timer command queue is set by the configTIMER_QUEUE_LENGTH configuration constant.

xTimerChangePeriod() changes the period of a timer that was previously created using the xTimerCreate() API function.

xTimerChangePeriod() can be called to change the period of an active or dormant state timer.

The configUSE_TIMERS configuration constant must be set to 1 for xTimerChangePeriod() to be available.

Example usage:

```
// This function assumes xTimer has already been created.  If the timer
// referenced by xTimer is already active when it is called, then the timer
// is deleted.  If the timer referenced by xTimer is not active when it is
// called, then the period of the timer is set to 500ms and the timer is
```

(下页继续)

(续上页)

```
// started.
void vAFunction( TimerHandle_t xTimer )
{
    if( xTimerIsTimerActive( xTimer ) != pdFALSE ) // or more simply and␣
↪equivalently "if( xTimerIsTimerActive( xTimer ) )"
    {
        // xTimer is already active - delete it.
        xTimerDelete( xTimer );
    }
    else
    {
        // xTimer is not active, change its period to 500ms.  This will also
        // cause the timer to start.  Block for a maximum of 100 ticks if the
        // change period command cannot immediately be sent to the timer
        // command queue.
        if( xTimerChangePeriod( xTimer, 500 / portTICK_PERIOD_MS, 100 ) == pdPASS )
        {
            // The command was successfully sent.
        }
        else
        {
            // The command could not be sent, even after waiting for 100 ticks
            // to pass.  Take appropriate action here.
        }
    }
}
```

Return pdFAIL will be returned if the change period command could not be sent to the timer command queue even after xTicksToWait ticks had passed. pdPASS will be returned if the command was successfully sent to the timer command queue. When the command is actually processed will depend on the priority of the timer service/daemon task relative to other tasks in the system. The timer service/daemon task priority is set by the configTIMER_TASK_PRIORITY configuration constant.

Parameters

- `xTimer`: The handle of the timer that is having its period changed.
- `xNewPeriod`: The new period for xTimer. Timer periods are specified in tick periods, so the constant portTICK_PERIOD_MS can be used to convert a time that has been specified in milliseconds. For example, if the timer must expire after 100 ticks, then xNewPeriod should be set to 100. Alternatively, if the timer must expire after 500ms, then xNewPeriod can be

set to (500 / portTICK_PERIOD_MS) provided configTICK_RATE_HZ is less than or equal to 1000.

- `xTicksToWait`: Specifies the time, in ticks, that the calling task should be held in the Blocked state to wait for the change period command to be successfully sent to the timer command queue, should the queue already be full when xTimerChangePeriod() was called. xTicksToWait is ignored if xTimerChangePeriod() is called before the scheduler is started.

`xTimerDelete`(xTimer, xTicksToWait)

Timer functionality is provided by a timer service/daemon task. Many of the public FreeRTOS timer API functions send commands to the timer service task through a queue called the timer command queue. The timer command queue is private to the kernel itself and is not directly accessible to application code. The length of the timer command queue is set by the configTIMER_QUEUE_LENGTH configuration constant.

xTimerDelete() deletes a timer that was previously created using the xTimerCreate() API function.

The configUSE_TIMERS configuration constant must be set to 1 for xTimerDelete() to be available.

Example usage:

Return pdFAIL will be returned if the delete command could not be sent to the timer command queue even after xTicksToWait ticks had passed. pdPASS will be returned if the command was successfully sent to the timer command queue. When the command is actually processed will depend on the priority of the timer service/daemon task relative to other tasks in the system. The timer service/daemon task priority is set by the configTIMER_TASK_PRIORITY configuration constant.

Parameters

- `xTimer`: The handle of the timer being deleted.
- `xTicksToWait`: Specifies the time, in ticks, that the calling task should be held in the Blocked state to wait for the delete command to be successfully sent to the timer command queue, should the queue already be full when xTimerDelete() was called. xTicksToWait is ignored if xTimerDelete() is called before the scheduler is started.

See the xTimerChangePeriod() API function example usage scenario.

`xTimerReset`(xTimer, xTicksToWait)

Timer functionality is provided by a timer service/daemon task. Many of the public FreeRTOS timer API functions send commands to the timer service task through a queue called the timer command queue. The timer command queue is private to the kernel itself and is not directly accessible to application code. The length of the timer command queue is set by the configTIMER_QUEUE_LENGTH configuration constant.

xTimerReset() re-starts a timer that was previously created using the xTimerCreate() API function. If the timer had already been started and was already in the active state, then xTimerReset() will cause the timer to re-evaluate its expiry time so that it is relative to when xTimerReset() was called. If the

timer was in the dormant state then xTimerReset() has equivalent functionality to the xTimerStart() API function.

Resetting a timer ensures the timer is in the active state. If the timer is not stopped, deleted, or reset in the mean time, the callback function associated with the timer will get called 'n' ticks after xTimerReset() was called, where 'n' is the timers defined period.

It is valid to call xTimerReset() before the scheduler has been started, but when this is done the timer will not actually start until the scheduler is started, and the timers expiry time will be relative to when the scheduler is started, not relative to when xTimerReset() was called.

The configUSE_TIMERS configuration constant must be set to 1 for xTimerReset() to be available.

Example usage:

```
// When a key is pressed, an LCD back-light is switched on.  If 5 seconds pass
// without a key being pressed, then the LCD back-light is switched off.  In
// this case, the timer is a one-shot timer.

TimerHandle_t xBacklightTimer = NULL;

// The callback function assigned to the one-shot timer.  In this case the
// parameter is not used.
void vBacklightTimerCallback( TimerHandle_t pxTimer )
{
    // The timer expired, therefore 5 seconds must have passed since a key
    // was pressed.  Switch off the LCD back-light.
    vSetBacklightState( BACKLIGHT_OFF );
}

// The key press event handler.
void vKeyPressEventHandler( char cKey )
{
    // Ensure the LCD back-light is on, then reset the timer that is
    // responsible for turning the back-light off after 5 seconds of
    // key inactivity.  Wait 10 ticks for the command to be successfully sent
    // if it cannot be sent immediately.
    vSetBacklightState( BACKLIGHT_ON );
    if( xTimerReset( xBacklightTimer, 100 ) != pdPASS )
    {
        // The reset command was not executed successfully.  Take appropriate
        // action here.
    }
```

(下页继续)

(续上页)

```
    // Perform the rest of the key processing here.
}

void main( void )
{
int32_t x;

    // Create then start the one-shot timer that is responsible for turning
    // the back-light off if no keys are pressed within a 5 second period.
    xBacklightTimer = xTimerCreate( "BacklightTimer",           // Just a text name,
↪ not used by the kernel.
                                    ( 5000 / portTICK_PERIOD_MS), // The timer␣
↪period in ticks.
                                    pdFALSE,                    // The timer is a␣
↪one-shot timer.
                                    0,                          // The id is not␣
↪used by the callback so can take any value.
                                    vBacklightTimerCallback     // The callback␣
↪function that switches the LCD back-light off.
                                  );

    if( xBacklightTimer == NULL )
    {
        // The timer was not created.
    }
    else
    {
        // Start the timer.  No block time is specified, and even if one was
        // it would be ignored because the scheduler has not yet been
        // started.
        if( xTimerStart( xBacklightTimer, 0 ) != pdPASS )
        {
            // The timer could not be set into the Active state.
        }
    }

    // ...
    // Create tasks here.
    // ...
```

(下页继续)

(续上页)

```
    // Starting the scheduler will start the timer running as it has already
    // been set into the active state.
    xTaskStartScheduler();

    // Should not reach here.
    for( ;; );
}
```

Return pdFAIL will be returned if the reset command could not be sent to the timer command queue even after xTicksToWait ticks had passed. pdPASS will be returned if the command was successfully sent to the timer command queue. When the command is actually processed will depend on the priority of the timer service/daemon task relative to other tasks in the system, although the timers expiry time is relative to when xTimerStart() is actually called. The timer service/daemon task priority is set by the configTIMER_TASK_PRIORITY configuration constant.

Parameters

- `xTimer`: The handle of the timer being reset/started/restarted.
- `xTicksToWait`: Specifies the time, in ticks, that the calling task should be held in the Blocked state to wait for the reset command to be successfully sent to the timer command queue, should the queue already be full when xTimerReset() was called. xTicksToWait is ignored if xTimerReset() is called before the scheduler is started.

`xTimerStartFromISR`(xTimer, pxHigherPriorityTaskWoken)

A version of xTimerStart() that can be called from an interrupt service routine.

Example usage:

```
// This scenario assumes xBacklightTimer has already been created.  When a
// key is pressed, an LCD back-light is switched on.  If 5 seconds pass
// without a key being pressed, then the LCD back-light is switched off.  In
// this case, the timer is a one-shot timer, and unlike the example given for
// the xTimerReset() function, the key press event handler is an interrupt
// service routine.

// The callback function assigned to the one-shot timer.  In this case the
// parameter is not used.
void vBacklightTimerCallback( TimerHandle_t pxTimer )
{
    // The timer expired, therefore 5 seconds must have passed since a key
    // was pressed.  Switch off the LCD back-light.
```

(下页继续)

(续上页)

```
    vSetBacklightState( BACKLIGHT_OFF );
}

// The key press interrupt service routine.
void vKeyPressEventInterruptHandler( void )
{
BaseType_t xHigherPriorityTaskWoken = pdFALSE;

    // Ensure the LCD back-light is on, then restart the timer that is
    // responsible for turning the back-light off after 5 seconds of
    // key inactivity.  This is an interrupt service routine so can only
    // call FreeRTOS API functions that end in "FromISR".
    vSetBacklightState( BACKLIGHT_ON );

    // xTimerStartFromISR() or xTimerResetFromISR() could be called here
    // as both cause the timer to re-calculate its expiry time.
    // xHigherPriorityTaskWoken was initialised to pdFALSE when it was
    // declared (in this function).
    if( xTimerStartFromISR( xBacklightTimer, &xHigherPriorityTaskWoken ) != pdPASS )
    {
        // The start command was not executed successfully.  Take appropriate
        // action here.
    }

    // Perform the rest of the key processing here.

    // If xHigherPriorityTaskWoken equals pdTRUE, then a context switch
    // should be performed.  The syntax required to perform a context switch
    // from inside an ISR varies from port to port, and from compiler to
    // compiler.  Inspect the demos for the port you are using to find the
    // actual syntax required.
    if( xHigherPriorityTaskWoken != pdFALSE )
    {
        // Call the interrupt safe yield function here (actual function
        // depends on the FreeRTOS port being used).
    }
}
```

Return pdFAIL will be returned if the start command could not be sent to the timer command queue. pdPASS will be returned if the command was successfully sent to the timer command queue.

When the command is actually processed will depend on the priority of the timer service/daemon task relative to other tasks in the system, although the timers expiry time is relative to when xTimerStartFromISR() is actually called. The timer service/daemon task priority is set by the configTIMER_TASK_PRIORITY configuration constant.

Parameters

- `xTimer`: The handle of the timer being started/restarted.
- `pxHigherPriorityTaskWoken`: The timer service/daemon task spends most of its time in the Blocked state, waiting for messages to arrive on the timer command queue. Calling xTimerStartFromISR() writes a message to the timer command queue, so has the potential to transition the timer service/daemon task out of the Blocked state. If calling xTimerStartFromISR() causes the timer service/daemon task to leave the Blocked state, and the timer service/ daemon task has a priority equal to or greater than the currently executing task (the task that was interrupted), then *pxHigherPriorityTaskWoken will get set to pdTRUE internally within the xTimerStartFromISR() function. If xTimerStartFromISR() sets this value to pdTRUE then a context switch should be performed before the interrupt exits.

xTimerStopFromISR(xTimer, pxHigherPriorityTaskWoken)

A version of xTimerStop() that can be called from an interrupt service routine.

Example usage:

```
// This scenario assumes xTimer has already been created and started.  When
// an interrupt occurs, the timer should be simply stopped.

// The interrupt service routine that stops the timer.
void vAnExampleInterruptServiceRoutine( void )
{
BaseType_t xHigherPriorityTaskWoken = pdFALSE;

    // The interrupt has occurred - simply stop the timer.
    // xHigherPriorityTaskWoken was set to pdFALSE where it was defined
    // (within this function).  As this is an interrupt service routine, only
    // FreeRTOS API functions that end in "FromISR" can be used.
    if( xTimerStopFromISR( xTimer, &xHigherPriorityTaskWoken ) != pdPASS )
    {
        // The stop command was not executed successfully.  Take appropriate
        // action here.
    }

    // If xHigherPriorityTaskWoken equals pdTRUE, then a context switch
    // should be performed.  The syntax required to perform a context switch
```

(下页继续)

(续上页)

```
    // from inside an ISR varies from port to port, and from compiler to
    // compiler.  Inspect the demos for the port you are using to find the
    // actual syntax required.
    if( xHigherPriorityTaskWoken != pdFALSE )
    {
        // Call the interrupt safe yield function here (actual function
        // depends on the FreeRTOS port being used).
    }
}
```

Return pdFAIL will be returned if the stop command could not be sent to the timer command queue. pdPASS will be returned if the command was successfully sent to the timer command queue. When the command is actually processed will depend on the priority of the timer service/daemon task relative to other tasks in the system. The timer service/daemon task priority is set by the configTIMER_TASK_PRIORITY configuration constant.

Parameters

- `xTimer`: The handle of the timer being stopped.
- `pxHigherPriorityTaskWoken`: The timer service/daemon task spends most of its time in the Blocked state, waiting for messages to arrive on the timer command queue. Calling xTimerStopFromISR() writes a message to the timer command queue, so has the potential to transition the timer service/daemon task out of the Blocked state. If calling xTimerStopFromISR() causes the timer service/daemon task to leave the Blocked state, and the timer service/ daemon task has a priority equal to or greater than the currently executing task (the task that was interrupted), then *pxHigherPriorityTaskWoken will get set to pdTRUE internally within the xTimerStopFromISR() function. If xTimerStopFromISR() sets this value to pdTRUE then a context switch should be performed before the interrupt exits.

`xTimerChangePeriodFromISR`(xTimer, xNewPeriod, pxHigherPriorityTaskWoken)

A version of xTimerChangePeriod() that can be called from an interrupt service routine.

Example usage:

```
// This scenario assumes xTimer has already been created and started.  When
// an interrupt occurs, the period of xTimer should be changed to 500ms.

// The interrupt service routine that changes the period of xTimer.
void vAnExampleInterruptServiceRoutine( void )
{
```

(下页继续)

(续上页)

```
BaseType_t xHigherPriorityTaskWoken = pdFALSE;

    // The interrupt has occurred - change the period of xTimer to 500ms.
    // xHigherPriorityTaskWoken was set to pdFALSE where it was defined
    // (within this function).  As this is an interrupt service routine, only
    // FreeRTOS API functions that end in "FromISR" can be used.
    if( xTimerChangePeriodFromISR( xTimer, &xHigherPriorityTaskWoken ) != pdPASS )
    {
        // The command to change the timers period was not executed
        // successfully.  Take appropriate action here.
    }

    // If xHigherPriorityTaskWoken equals pdTRUE, then a context switch
    // should be performed.  The syntax required to perform a context switch
    // from inside an ISR varies from port to port, and from compiler to
    // compiler.  Inspect the demos for the port you are using to find the
    // actual syntax required.
    if( xHigherPriorityTaskWoken != pdFALSE )
    {
        // Call the interrupt safe yield function here (actual function
        // depends on the FreeRTOS port being used).
    }
}
```

Return pdFAIL will be returned if the command to change the timers period could not be sent to the timer command queue. pdPASS will be returned if the command was successfully sent to the timer command queue. When the command is actually processed will depend on the priority of the timer service/daemon task relative to other tasks in the system. The timer service/daemon task priority is set by the configTIMER_TASK_PRIORITY configuration constant.

Parameters

- `xTimer`: The handle of the timer that is having its period changed.
- `xNewPeriod`: The new period for xTimer. Timer periods are specified in tick periods, so the constant portTICK_PERIOD_MS can be used to convert a time that has been specified in milliseconds. For example, if the timer must expire after 100 ticks, then xNewPeriod should be set to 100. Alternatively, if the timer must expire after 500ms, then xNewPeriod can be set to (500 / portTICK_PERIOD_MS) provided configTICK_RATE_HZ is less than or equal to 1000.
- `pxHigherPriorityTaskWoken`: The timer service/daemon task spends most of its time in the Blocked state, waiting for messages to arrive on the timer command queue. Calling

xTimerChangePeriodFromISR() writes a message to the timer command queue, so has the potential to transition the timer service/ daemon task out of the Blocked state. If calling xTimerChangePeriodFromISR() causes the timer service/daemon task to leave the Blocked state, and the timer service/daemon task has a priority equal to or greater than the currently executing task (the task that was interrupted), then *pxHigherPriorityTaskWoken will get set to pdTRUE internally within the xTimerChangePeriodFromISR() function. If xTimerChangePeriodFromISR() sets this value to pdTRUE then a context switch should be performed before the interrupt exits.

xTimerResetFromISR(xTimer, pxHigherPriorityTaskWoken)

A version of xTimerReset() that can be called from an interrupt service routine.

Example usage:

```
// This scenario assumes xBacklightTimer has already been created.  When a
// key is pressed, an LCD back-light is switched on.  If 5 seconds pass
// without a key being pressed, then the LCD back-light is switched off.  In
// this case, the timer is a one-shot timer, and unlike the example given for
// the xTimerReset() function, the key press event handler is an interrupt
// service routine.

// The callback function assigned to the one-shot timer.  In this case the
// parameter is not used.
void vBacklightTimerCallback( TimerHandle_t pxTimer )
{
    // The timer expired, therefore 5 seconds must have passed since a key
    // was pressed.  Switch off the LCD back-light.
    vSetBacklightState( BACKLIGHT_OFF );
}

// The key press interrupt service routine.
void vKeyPressEventInterruptHandler( void )
{
BaseType_t xHigherPriorityTaskWoken = pdFALSE;

    // Ensure the LCD back-light is on, then reset the timer that is
    // responsible for turning the back-light off after 5 seconds of
    // key inactivity.  This is an interrupt service routine so can only
    // call FreeRTOS API functions that end in "FromISR".
    vSetBacklightState( BACKLIGHT_ON );

    // xTimerStartFromISR() or xTimerResetFromISR() could be called here
```

(下页继续)

(续上页)

```
    // as both cause the timer to re-calculate its expiry time.
    // xHigherPriorityTaskWoken was initialised to pdFALSE when it was
    // declared (in this function).
    if( xTimerResetFromISR( xBacklightTimer, &xHigherPriorityTaskWoken ) != pdPASS )
    {
        // The reset command was not executed successfully.  Take appropriate
        // action here.
    }

    // Perform the rest of the key processing here.

    // If xHigherPriorityTaskWoken equals pdTRUE, then a context switch
    // should be performed.  The syntax required to perform a context switch
    // from inside an ISR varies from port to port, and from compiler to
    // compiler.  Inspect the demos for the port you are using to find the
    // actual syntax required.
    if( xHigherPriorityTaskWoken != pdFALSE )
    {
        // Call the interrupt safe yield function here (actual function
        // depends on the FreeRTOS port being used).
    }
}
```

Return pdFAIL will be returned if the reset command could not be sent to the timer command queue. pdPASS will be returned if the command was successfully sent to the timer command queue. When the command is actually processed will depend on the priority of the timer service/daemon task relative to other tasks in the system, although the timers expiry time is relative to when xTimerResetFromISR() is actually called. The timer service/daemon task priority is set by the configTIMER_TASK_PRIORITY configuration constant.

Parameters

- `xTimer`: The handle of the timer that is to be started, reset, or restarted.
- `pxHigherPriorityTaskWoken`: The timer service/daemon task spends most of its time in the Blocked state, waiting for messages to arrive on the timer command queue. Calling xTimerResetFromISR() writes a message to the timer command queue, so has the potential to transition the timer service/daemon task out of the Blocked state. If calling xTimerReset-FromISR() causes the timer service/daemon task to leave the Blocked state, and the timer service/ daemon task has a priority equal to or greater than the currently executing task (the task that was interrupted), then *pxHigherPriorityTaskWoken will get set to pdTRUE internally within the xTimerResetFromISR() function. If xTimerResetFromISR() sets this

value to pdTRUE then a context switch should be performed before the interrupt exits.

Type Definitions

typedef void ***TimerHandle_t**

Type by which software timers are referenced. For example, a call to xTimerCreate() returns an TimerHandle_t variable that can then be used to reference the subject timer in calls to other software timer API functions (for example, xTimerStart(), xTimerReset(), etc.).

typedef void (***TimerCallbackFunction_t**)(*TimerHandle_t* xTimer)

Defines the prototype to which timer callback functions must conform.

typedef void (***PendedFunction_t**)(void *, uint32_t)

Defines the prototype to which functions used with the xTimerPendFunctionCallFromISR() function must conform.

Event Group API

Header File

- freertos/include/freertos/event_groups.h

Functions

EventGroupHandle_t **xEventGroupCreate**(void)

Create a new event group.

Internally, within the FreeRTOS implementation, event groups use a [small] block of memory, in which the event group's structure is stored. If an event groups is created using xEventGroupCreate() then the required memory is automatically dynamically allocated inside the xEventGroupCreate() function. (see http://www.freertos.org/a00111.html). If an event group is created using xEventGropuCreateStatic() then the application writer must instead provide the memory that will get used by the event group. xEventGroupCreateStatic() therefore allows an event group to be created without using any dynamic memory allocation.

Although event groups are not related to ticks, for internal implementation reasons the number of bits available for use in an event group is dependent on the configUSE_16_BIT_TICKS setting in FreeRTOSConfig.h. If configUSE_16_BIT_TICKS is 1 then each event group contains 8 usable bits (bit 0 to bit 7). If configUSE_16_BIT_TICKS is set to 0 then each event group has 24 usable bits (bit 0 to bit 23). The EventBits_t type is used to store event bits within an event group.

Example usage:

```
// Declare a variable to hold the created event group.
EventGroupHandle_t xCreatedEventGroup;

// Attempt to create the event group.
xCreatedEventGroup = xEventGroupCreate();

// Was the event group created successfully?
if( xCreatedEventGroup == NULL )
{
    // The event group was not created because there was insufficient
    // FreeRTOS heap available.
}
else
{
    // The event group was created.
}
```

Return If the event group was created then a handle to the event group is returned. If there was insufficient FreeRTOS heap available to create the event group then NULL is returned. See http://www.freertos.org/a00111.html

EventGroupHandle_t **xEventGroupCreateStatic**(StaticEventGroup_t **pxEventGroupBuffer*)

Create a new event group.

Internally, within the FreeRTOS implementation, event groups use a [small] block of memory, in which the event group' s structure is stored. If an event groups is created using xEventGropuCreate() then the required memory is automatically dynamically allocated inside the xEventGroupCreate() function. (see http://www.freertos.org/a00111.html). If an event group is created using xEventGropuCreateStatic() then the application writer must instead provide the memory that will get used by the event group. xEventGroupCreateStatic() therefore allows an event group to be created without using any dynamic memory allocation.

Although event groups are not related to ticks, for internal implementation reasons the number of bits available for use in an event group is dependent on the configUSE_16_BIT_TICKS setting in FreeRTOSConfig.h. If configUSE_16_BIT_TICKS is 1 then each event group contains 8 usable bits (bit 0 to bit 7). If configUSE_16_BIT_TICKS is set to 0 then each event group has 24 usable bits (bit 0 to bit 23). The EventBits_t type is used to store event bits within an event group.

Example usage:

```
// StaticEventGroup_t is a publicly accessible structure that has the same
// size and alignment requirements as the real event group structure.  It is
```

(下页继续)

(续上页)

```
// provided as a mechanism for applications to know the size of the event
// group (which is dependent on the architecture and configuration file
// settings) without breaking the strict data hiding policy by exposing the
// real event group internals.  This StaticEventGroup_t variable is passed
// into the xSemaphoreCreateEventGroupStatic() function and is used to store
// the event group's data structures
StaticEventGroup_t xEventGroupBuffer;

// Create the event group without dynamically allocating any memory.
xEventGroup = xEventGroupCreateStatic( &xEventGroupBuffer );
```

Return If the event group was created then a handle to the event group is returned. If pxEventGroupBuffer was NULL then NULL is returned.

Parameters

- `pxEventGroupBuffer`: pxEventGroupBuffer must point to a variable of type StaticEventGroup_t, which will be then be used to hold the event group' s data structures, removing the need for the memory to be allocated dynamically.

EventBits_t **xEventGroupWaitBits**(*EventGroupHandle_t* *xEventGroup*, **const** *EventBits_t* *uxBitsToWaitFor*, **const** BaseType_t *xClearOnExit*, **const** BaseType_t *xWaitForAllBits*, TickType_t *xTicksToWait*)

[Potentially] block to wait for one or more bits to be set within a previously created event group.

This function cannot be called from an interrupt.

Example usage:

```
#define BIT_0    ( 1 << 0 )
#define BIT_4    ( 1 << 4 )

void aFunction( EventGroupHandle_t xEventGroup )
{
EventBits_t uxBits;
const TickType_t xTicksToWait = 100 / portTICK_PERIOD_MS;

    // Wait a maximum of 100ms for either bit 0 or bit 4 to be set within
    // the event group.  Clear the bits before exiting.
    uxBits = xEventGroupWaitBits(
                xEventGroup,    // The event group being tested.
                BIT_0 | BIT_4,  // The bits within the event group to wait for.
                pdTRUE,         // BIT_0 and BIT_4 should be cleared before␣
↪returning.
```

(下页继续)

(续上页)

```
                pdFALSE,        // Don't wait for both bits, either bit will do.
                xTicksToWait ); // Wait a maximum of 100ms for either bit to be␣
↪set.

    if( ( uxBits & ( BIT_0 | BIT_4 ) ) == ( BIT_0 | BIT_4 ) )
    {
        // xEventGroupWaitBits() returned because both bits were set.
    }
    else if( ( uxBits & BIT_0 ) != 0 )
    {
        // xEventGroupWaitBits() returned because just BIT_0 was set.
    }
    else if( ( uxBits & BIT_4 ) != 0 )
    {
        // xEventGroupWaitBits() returned because just BIT_4 was set.
    }
    else
    {
        // xEventGroupWaitBits() returned because xTicksToWait ticks passed
        // without either BIT_0 or BIT_4 becoming set.
    }
}
```

{c}

Return The value of the event group at the time either the bits being waited for became set, or the block time expired. Test the return value to know which bits were set. If xEventGroupWaitBits() returned because its timeout expired then not all the bits being waited for will be set. If xEventGroupWaitBits() returned because the bits it was waiting for were set then the returned value is the event group value before any bits were automatically cleared in the case that xClearOnExit parameter was set to pdTRUE.

Parameters

- `xEventGroup`: The event group in which the bits are being tested. The event group must have previously been created using a call to xEventGroupCreate().
- `uxBitsToWaitFor`: A bitwise value that indicates the bit or bits to test inside the event group. For example, to wait for bit 0 and/or bit 2 set uxBitsToWaitFor to 0x05. To wait for bits 0 and/or bit 1 and/or bit 2 set uxBitsToWaitFor to 0x07. Etc.
- `xClearOnExit`: If xClearOnExit is set to pdTRUE then any bits within uxBitsToWaitFor that are set within the event group will be cleared before xEventGroupWaitBits() returns if the wait condition was met (if the function returns for a reason other than a timeout). If

xClearOnExit is set to pdFALSE then the bits set in the event group are not altered when the call to xEventGroupWaitBits() returns.

- `xWaitForAllBits`: If xWaitForAllBits is set to pdTRUE then xEventGroupWaitBits() will return when either all the bits in uxBitsToWaitFor are set or the specified block time expires. If xWaitForAllBits is set to pdFALSE then xEventGroupWaitBits() will return when any one of the bits set in uxBitsToWaitFor is set or the specified block time expires. The block time is specified by the xTicksToWait parameter.
- `xTicksToWait`: The maximum amount of time (specified in 'ticks') to wait for one/all (depending on the xWaitForAllBits value) of the bits specified by uxBitsToWaitFor to become set.

EventBits_t **xEventGroupClearBits**(*EventGroupHandle_t xEventGroup*, **const** *EventBits_t uxBitsToClear*)

Clear bits within an event group. This function cannot be called from an interrupt.

Example usage:

```
#define BIT_0    ( 1 << 0 )
#define BIT_4    ( 1 << 4 )

void aFunction( EventGroupHandle_t xEventGroup )
{
EventBits_t uxBits;

    // Clear bit 0 and bit 4 in xEventGroup.
    uxBits = xEventGroupClearBits(
                          xEventGroup,    // The event group being updated.
                          BIT_0 | BIT_4 );// The bits being cleared.

    if( ( uxBits & ( BIT_0 | BIT_4 ) ) == ( BIT_0 | BIT_4 ) )
    {
        // Both bit 0 and bit 4 were set before xEventGroupClearBits() was
        // called.  Both will now be clear (not set).
    }
    else if( ( uxBits & BIT_0 ) != 0 )
    {
        // Bit 0 was set before xEventGroupClearBits() was called.  It will
        // now be clear.
    }
    else if( ( uxBits & BIT_4 ) != 0 )
    {
        // Bit 4 was set before xEventGroupClearBits() was called.  It will
```

(下页继续)

(续上页)

```
        // now be clear.
    }
    else
    {
        // Neither bit 0 nor bit 4 were set in the first place.
    }
}
```

Return The value of the event group before the specified bits were cleared.

Parameters

- `xEventGroup`: The event group in which the bits are to be cleared.
- `uxBitsToClear`: A bitwise value that indicates the bit or bits to clear in the event group. For example, to clear bit 3 only, set uxBitsToClear to 0x08. To clear bit 3 and bit 0 set uxBitsToClear to 0x09.

EventBits_t **xEventGroupSetBits**(*EventGroupHandle_t* *xEventGroup*, **const** *EventBits_t* *uxBitsToSet*)

Set bits within an event group. This function cannot be called from an interrupt. xEventGroupSetBitsFromISR() is a version that can be called from an interrupt.

Setting bits in an event group will automatically unblock tasks that are blocked waiting for the bits.

Example usage:

```
#define BIT_0    ( 1 << 0 )
#define BIT_4    ( 1 << 4 )

void aFunction( EventGroupHandle_t xEventGroup )
{
EventBits_t uxBits;

    // Set bit 0 and bit 4 in xEventGroup.
    uxBits = xEventGroupSetBits(
                        xEventGroup,    // The event group being updated.
                        BIT_0 | BIT_4 );// The bits being set.

    if( ( uxBits & ( BIT_0 | BIT_4 ) ) == ( BIT_0 | BIT_4 ) )
    {
        // Both bit 0 and bit 4 remained set when the function returned.
    }
```

(下页继续)

(续上页)

```
    else if( ( uxBits & BIT_0 ) != 0 )
    {
        // Bit 0 remained set when the function returned, but bit 4 was
        // cleared.  It might be that bit 4 was cleared automatically as a
        // task that was waiting for bit 4 was removed from the Blocked
        // state.
    }
    else if( ( uxBits & BIT_4 ) != 0 )
    {
        // Bit 4 remained set when the function returned, but bit 0 was
        // cleared.  It might be that bit 0 was cleared automatically as a
        // task that was waiting for bit 0 was removed from the Blocked
        // state.
    }
    else
    {
        // Neither bit 0 nor bit 4 remained set.  It might be that a task
        // was waiting for both of the bits to be set, and the bits were
        // cleared as the task left the Blocked state.
    }
}
```

{c}

Return The value of the event group at the time the call to xEventGroupSetBits() returns. There are two reasons why the returned value might have the bits specified by the uxBitsToSet parameter cleared. First, if setting a bit results in a task that was waiting for the bit leaving the blocked state then it is possible the bit will be cleared automatically (see the xClearBitOnExit parameter of xEventGroupWaitBits()). Second, any unblocked (or otherwise Ready state) task that has a priority above that of the task that called xEventGroupSetBits() will execute and may change the event group value before the call to xEventGroupSetBits() returns.

Parameters

- `xEventGroup`: The event group in which the bits are to be set.
- `uxBitsToSet`: A bitwise value that indicates the bit or bits to set. For example, to set bit 3 only, set uxBitsToSet to 0x08. To set bit 3 and bit 0 set uxBitsToSet to 0x09.

EventBits_t **xEventGroupSync**(*EventGroupHandle_t xEventGroup*, **const** *EventBits_t uxBitsToSet*, **const** *EventBits_t uxBitsToWaitFor*, TickType_t *xTicksToWait*)

Atomically set bits within an event group, then wait for a combination of bits to be set within the same event group. This functionality is typically used to synchronise multiple tasks, where each task has to wait for the other tasks to reach a synchronisation point before proceeding.

This function cannot be used from an interrupt.

The function will return before its block time expires if the bits specified by the uxBitsToWait parameter are set, or become set within that time. In this case all the bits specified by uxBitsToWait will be automatically cleared before the function returns.

Example usage:

```
// Bits used by the three tasks.
#define TASK_0_BIT     ( 1 << 0 )
#define TASK_1_BIT     ( 1 << 1 )
#define TASK_2_BIT     ( 1 << 2 )

#define ALL_SYNC_BITS ( TASK_0_BIT | TASK_1_BIT | TASK_2_BIT )

// Use an event group to synchronise three tasks.  It is assumed this event
// group has already been created elsewhere.
EventGroupHandle_t xEventBits;

void vTask0( void *pvParameters )
{
EventBits_t uxReturn;
TickType_t xTicksToWait = 100 / portTICK_PERIOD_MS;

    for( ;; )
    {
       // Perform task functionality here.

       // Set bit 0 in the event flag to note this task has reached the
       // sync point.  The other two tasks will set the other two bits defined
       // by ALL_SYNC_BITS.  All three tasks have reached the synchronisation
       // point when all the ALL_SYNC_BITS are set.  Wait a maximum of 100ms
       // for this to happen.
       uxReturn = xEventGroupSync( xEventBits, TASK_0_BIT, ALL_SYNC_BITS,␣
↪xTicksToWait );

       if( ( uxReturn & ALL_SYNC_BITS ) == ALL_SYNC_BITS )
       {
           // All three tasks reached the synchronisation point before the call
           // to xEventGroupSync() timed out.
       }
   }
```

(下页继续)

(续上页)

```
}

void vTask1( void *pvParameters )
{
    for( ;; )
    {
       // Perform task functionality here.

       // Set bit 1 in the event flag to note this task has reached the
       // synchronisation point.  The other two tasks will set the other two
       // bits defined by ALL_SYNC_BITS.  All three tasks have reached the
       // synchronisation point when all the ALL_SYNC_BITS are set.  Wait
       // indefinitely for this to happen.
       xEventGroupSync( xEventBits, TASK_1_BIT, ALL_SYNC_BITS, portMAX_DELAY );

       // xEventGroupSync() was called with an indefinite block time, so
       // this task will only reach here if the syncrhonisation was made by all
       // three tasks, so there is no need to test the return value.
    }
}

void vTask2( void *pvParameters )
{
    for( ;; )
    {
       // Perform task functionality here.

       // Set bit 2 in the event flag to note this task has reached the
       // synchronisation point.  The other two tasks will set the other two
       // bits defined by ALL_SYNC_BITS.  All three tasks have reached the
       // synchronisation point when all the ALL_SYNC_BITS are set.  Wait
       // indefinitely for this to happen.
       xEventGroupSync( xEventBits, TASK_2_BIT, ALL_SYNC_BITS, portMAX_DELAY );

       // xEventGroupSync() was called with an indefinite block time, so
       // this task will only reach here if the syncrhonisation was made by all
       // three tasks, so there is no need to test the return value.
   }
}
```

Return The value of the event group at the time either the bits being waited for became set, or the block time expired. Test the return value to know which bits were set. If xEventGroupSync() returned because its timeout expired then not all the bits being waited for will be set. If xEventGroupSync() returned because all the bits it was waiting for were set then the returned value is the event group value before any bits were automatically cleared.

Parameters

- `xEventGroup`: The event group in which the bits are being tested. The event group must have previously been created using a call to xEventGroupCreate().
- `uxBitsToSet`: The bits to set in the event group before determining if, and possibly waiting for, all the bits specified by the uxBitsToWait parameter are set.
- `uxBitsToWaitFor`: A bitwise value that indicates the bit or bits to test inside the event group. For example, to wait for bit 0 and bit 2 set uxBitsToWaitFor to 0x05. To wait for bits 0 and bit 1 and bit 2 set uxBitsToWaitFor to 0x07. Etc.
- `xTicksToWait`: The maximum amount of time (specified in 'ticks') to wait for all of the bits specified by uxBitsToWaitFor to become set.

EventBits_t **xEventGroupGetBitsFromISR**(*EventGroupHandle_t xEventGroup*)

A version of xEventGroupGetBits() that can be called from an ISR.

Return The event group bits at the time xEventGroupGetBitsFromISR() was called.

Parameters

- `xEventGroup`: The event group being queried.

void **vEventGroupDelete**(*EventGroupHandle_t xEventGroup*)

Delete an event group that was previously created by a call to xEventGroupCreate(). Tasks that are blocked on the event group will be unblocked and obtain 0 as the event group's value.

Parameters

- `xEventGroup`: The event group being deleted.

Macros

xEventGroupClearBitsFromISR(xEventGroup, uxBitsToClear)

A version of xEventGroupClearBits() that can be called from an interrupt.

Setting bits in an event group is not a deterministic operation because there are an unknown number of tasks that may be waiting for the bit or bits being set. FreeRTOS does not allow nondeterministic operations to be performed while interrupts are disabled, so protects event groups that are accessed from tasks by suspending the scheduler rather than disabling interrupts. As a result event groups cannot be

accessed directly from an interrupt service routine. Therefore xEventGroupClearBitsFromISR() sends a message to the timer task to have the clear operation performed in the context of the timer task.

Example usage:

```
#define BIT_0    ( 1 << 0 )
#define BIT_4    ( 1 << 4 )

// An event group which it is assumed has already been created by a call to
// xEventGroupCreate().
EventGroupHandle_t xEventGroup;

void anInterruptHandler( void )
{
     // Clear bit 0 and bit 4 in xEventGroup.
     xResult = xEventGroupClearBitsFromISR(
                          xEventGroup,     // The event group being updated.
                          BIT_0 | BIT_4 ); // The bits being set.

     if( xResult == pdPASS )
     {
         // The message was posted successfully.
     }
}
```

Return If the request to execute the function was posted successfully then pdPASS is returned, otherwise pdFALSE is returned. pdFALSE will be returned if the timer service queue was full.

Parameters

- `xEventGroup`: The event group in which the bits are to be cleared.
- `uxBitsToClear`: A bitwise value that indicates the bit or bits to clear. For example, to clear bit 3 only, set uxBitsToClear to 0x08. To clear bit 3 and bit 0 set uxBitsToClear to 0x09.

xEventGroupSetBitsFromISR(xEventGroup, uxBitsToSet, pxHigherPriorityTaskWoken)

A version of xEventGroupSetBits() that can be called from an interrupt.

Setting bits in an event group is not a deterministic operation because there are an unknown number of tasks that may be waiting for the bit or bits being set. FreeRTOS does not allow nondeterministic operations to be performed in interrupts or from critical sections. Therefore xEventGroupSetBitFromISR() sends a message to the timer task to have the set operation performed in the context of the timer task - where a scheduler lock is used in place of a critical section.

Example usage:

```
#define BIT_0    ( 1 << 0 )
#define BIT_4    ( 1 << 4 )

// An event group which it is assumed has already been created by a call to
// xEventGroupCreate().
EventGroupHandle_t xEventGroup;

void anInterruptHandler( void )
{
BaseType_t xHigherPriorityTaskWoken, xResult;

     // xHigherPriorityTaskWoken must be initialised to pdFALSE.
     xHigherPriorityTaskWoken = pdFALSE;

     // Set bit 0 and bit 4 in xEventGroup.
     xResult = xEventGroupSetBitsFromISR(
                         xEventGroup,    // The event group being updated.
                         BIT_0 | BIT_4   // The bits being set.
                         &xHigherPriorityTaskWoken );

     // Was the message posted successfully?
     if( xResult == pdPASS )
     {
         // If xHigherPriorityTaskWoken is now set to pdTRUE then a context
         // switch should be requested.  The macro used is port specific and
         // will be either portYIELD_FROM_ISR() or portEND_SWITCHING_ISR() -
         // refer to the documentation page for the port being used.
         portYIELD_FROM_ISR( xHigherPriorityTaskWoken );
     }
}
```

Return If the request to execute the function was posted successfully then pdPASS is returned, otherwise pdFALSE is returned. pdFALSE will be returned if the timer service queue was full.

Parameters

- `xEventGroup`: The event group in which the bits are to be set.
- `uxBitsToSet`: A bitwise value that indicates the bit or bits to set. For example, to set bit 3 only, set uxBitsToSet to 0x08. To set bit 3 and bit 0 set uxBitsToSet to 0x09.
- `pxHigherPriorityTaskWoken`: As mentioned above, calling this function will result in a message being sent to the timer daemon task. If the priority of the timer daemon task

is higher than the priority of the currently running task (the task the interrupt interrupted) then *pxHigherPriorityTaskWoken will be set to pdTRUE by xEventGroupSetBitsFromISR(), indicating that a context switch should be requested before the interrupt exits. For that reason *pxHigherPriorityTaskWoken must be initialised to pdFALSE. See the example code below.

xEventGroupGetBits(xEventGroup)

Returns the current value of the bits in an event group. This function cannot be used from an interrupt.

Return The event group bits at the time xEventGroupGetBits() was called.

Parameters

- `xEventGroup`: The event group being queried.

Type Definitions

typedef void ***EventGroupHandle_t**

An event group is a collection of bits to which an application can assign a meaning. For example, an application may create an event group to convey the status of various CAN bus related events in which bit 0 might mean "A CAN

message has been received and is ready for processing" , bit 1 might mean "The application has queued a message that is ready for sending onto the CAN network" , and bit 2 might mean "It is time to send a SYNC message onto the CAN network" etc. A task can then test the bit values to see which events are active, and optionally enter the Blocked state to wait for a specified bit or a group of specified bits to be active. To continue the CAN bus example, a CAN controlling task can enter the Blocked state (and therefore not consume any processing time) until either bit 0, bit 1 or bit 2 are active, at which time the bit that was actually active would inform the task which action it had to take (process a received message, send a message, or send a SYNC).

The event groups implementation contains intelligence to avoid race conditions that would otherwise occur were an application to use a simple variable for the same purpose. This is particularly important with respect to when a bit within an event group is to be cleared, and when bits have to be set and then tested atomically - as is the case where event groups are used to create a synchronisation point between multiple tasks (a 'rendezvous'). event_groups.h

Type by which event groups are referenced. For example, a call to xEventGroupCreate() returns an EventGroupHandle_t variable that can then be used as a parameter to other event group functions.

typedef TickType_t **EventBits_t**

3.7.2 FreeRTOS Additions

Overview

ESP-IDF FreeRTOS is based on the Xtensa port of FreeRTOS v8.2.0 with significant modifications for SMP compatibility (see *ESP-IDF FreeRTOS SMP Changes*). However various features specific to ESP-IDF FreeRTOS have been added. The features are as follows:

Ring Buffers: Ring buffers were added to provide a form of buffer that could accept entries of arbitrary lengths.

Hooks: ESP-IDF FreeRTOS hooks provides support for registering extra Idle and Tick hooks at run time. Moreover, the hooks can be asymmetric amongst both CPUs.

Ring Buffers

The ESP-IDF FreeRTOS ring buffer is a strictly FIFO buffer that supports arbitrarily sized items. Ring buffers are a more memory efficient alternative to FreeRTOS queues in situations where the size of items is variable. The capacity of a ring buffer is not measured by the number of items it can store, but rather by the amount of memory used for storing items. Items are sent to ring buffers by copy, however for efficiency reasons **items are retrieved by reference**. As a result, all retrieved items **must also be returned** in order for them to be removed from the ring buffer completely. The ring buffers are split into the three following types:

No-Split buffers will guarantee that an item is stored in contiguous memory and will not attempt to split an item under any circumstances. Use no-split buffers when items must occupy contiguous memory.

Allow-Split buffers will allow an item to be split when wrapping around if doing so will allow the item to be stored. Allow-split buffers are more memory efficient than no-split buffers but can return an item in two parts when retrieving.

Byte buffers do not store data as separate items. All data is stored as a sequence of bytes, and any number of bytes and be sent or retrieved each time. Use byte buffers when separate items do not need to be maintained (e.g. a byte stream).

注解: No-split/allow-split buffers will always store items at 32-bit aligned addresses. Therefore when retrieving an item, the item pointer is guaranteed to be 32-bit aligned.

注解: Each item stored in no-split/allow-split buffers will **require an additional 8 bytes for a header**. Item sizes will also be rounded up to a 32-bit aligned size (multiple of 4 bytes), however the true item size is recorded within the header. The sizes of no-split/allow-split buffers will also be rounded up when created.

Usage

The following example demonstrates the usage of *xRingbufferCreate()* and *xRingbufferSend()* to create a ring buffer then send an item to it.

```
#include "freertos/ringbuf.h"
static char tx_item[] = "test_item";

...

    //Create ring buffer
    RingbufHandle_t buf_handle;
    buf_handle = xRingbufferCreate(1028, RINGBUF_TYPE_NOSPLIT);
    if (buf_handle == NULL) {
        printf("Failed to create ring buffer\n");
    }

    //Send an item
    UBaseType_t res =  xRingbufferSend(buf_handle, tx_item, sizeof(tx_item), pdMS_TO_
↪TICKS(1000));
    if (res != pdTRUE) {
        printf("Failed to send item\n");
    }
```

The following example demonstrates retrieving and returning an item from a **no-split ring buffer** using *xRingbufferReceive()* and *vRingbufferReturnItem()*

```
...

    //Receive an item from no-split ring buffer
    size_t item_size;
    char *item = (char *)xRingbufferReceive(buf_handle, &item_size, pdMS_TO_TICKS(1000));

    //Check received item
    if (item != NULL) {
        //Print item
        for (int i = 0; i < item_size; i++) {
            printf("%c", item[i]);
        }
        printf("\n");
        //Return Item
```

(下页继续)

(续上页)

```
        vRingbufferReturnItem(buf_handle, (void *)item);
    } else {
        //Failed to receive item
        printf("Failed to receive item\n");
    }
```

The following example demonstrates retrieving and returning an item from an **allow-split ring buffer** using *xRingbufferReceiveSplit()* and *vRingbufferReturnItem()*

```
...

    //Receive an item from allow-split ring buffer
    size_t item_size1, item_size2;
    char *item1, *item2;
    BaseType_t ret = xRingbufferReceiveSplit(buf_handle, (void **)&item1, (void **)&
↪item2, &item_size1, &item_size2, pdMS_TO_TICKS(1000));

    //Check received item
    if (ret == pdTRUE && item1 != NULL) {
        for (int i = 0; i < item_size1; i++) {
            printf("%c", item1[i]);
        }
        vRingbufferReturnItem(buf_handle, (void *)item1);
        //Check if item was split
        if (item2 != NULL) {
            for (int i = 0; i < item_size2; i++) {
                printf("%c", item2[i]);
            }
            vRingbufferReturnItem(buf_handle, (void *)item2);
        }
        printf("\n");
    } else {
        //Failed to receive item
        printf("Failed to receive item\n");
    }
```

The following example demonstrates retrieving and returning an item from a **byte buffer** using *xRingbufferReceiveUpTo()* and *vRingbufferReturnItem()*

```
...
```

(下页继续)

(续上页)

```
    //Receive data from byte buffer
    size_t item_size;
    char *item = (char *)xRingbufferReceiveUpTo(buf_handle, &item_size, pdMS_TO_
↪TICKS(1000), sizeof(tx_item));

    //Check received data
    if (item != NULL) {
        //Print item
        for (int i = 0; i < item_size; i++) {
            printf("%c", item[i]);
        }
        printf("\n");
        //Return Item
        vRingbufferReturnItem(buf_handle, (void *)item);
    } else {
        //Failed to receive item
        printf("Failed to receive item\n");
    }
```

For ISR safe versions of the functions used above, call *xRingbufferSendFromISR()*, *xRingbufferReceiveFromISR()*, *xRingbufferReceiveSplitFromISR()*, *xRingbufferReceiveUpToFromISR()*, and *vRingbufferReturnItemFromISR()*

Sending to Ring Buffer

The following diagrams illustrate the differences between no-split/allow-split buffers and byte buffers with regards to sending items/data. The diagrams assume that three items of sizes **18, 3, and 27 bytes** are sent respectively to a **buffer of 128 bytes**.

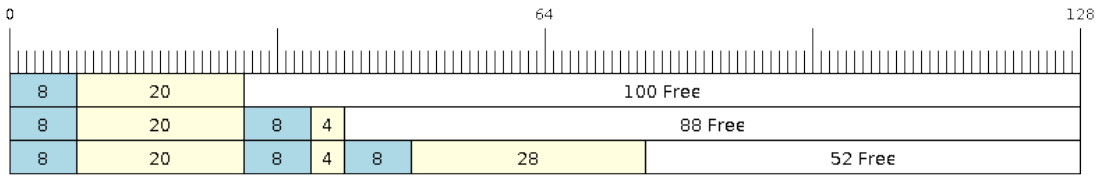

图 26: Sending items to no-split/allow-split ring buffers

For no-split/allow-split buffers, a header of 8 bytes precedes every data item. Furthermore, the space occupied by each item is **rounded up to the nearest 32-bit aligned size** in order to maintain overall

32-bit alignment. However the true size of the item is recorded inside the header which will be returned when the item is retrieved.

Referring to the diagram above, the 18, 3, and 27 byte items are **rounded up to 20, 4, and 28 bytes** respectively. An 8 byte header is then added in front of each item.

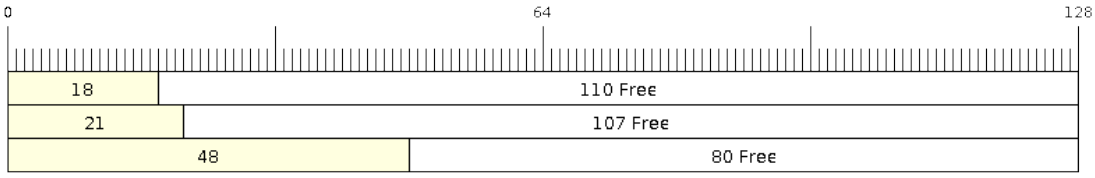

图 27: Sending items to byte buffers

Byte buffers treat data as a sequence of bytes and does not incur any overhead (no headers). As a result, all data sent to a byte buffer is merged into a single item.

Referring to the diagram above, the 18, 3, and 27 byte items are sequentially written to the byte buffer and **merged into a single item of 48 bytes**.

Wrap around

The following diagrams illustrate the differences between no-split, allow-split, and byte buffers when a sent item requires a wrap around. The diagrams assumes a buffer of **128 bytes** with **56 bytes of free space that wraps around** and a sent item of **28 bytes**.

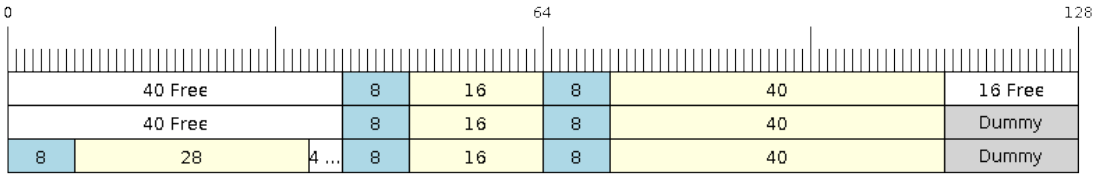

图 28: Wrap around in no-split buffers

No-split buffers will **only store an item in continuous free space and will not split an item under any circumstances**. When the free space at the tail of the buffer is insufficient to completely store the item and its header, the free space at the tail will be **marked as dummy data**. The buffer will then wrap around and store the item in the free space at the head of the buffer.

Referring to the diagram above, the 16 bytes of free space at the tail of the buffer is insufficient to store the 28 byte item. Therefore the 16 bytes is marked as dummy data and the item is written to the free space at the head of the buffer instead.

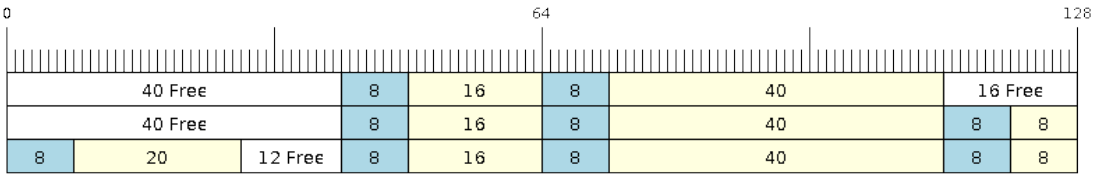

图 29: Wrap around in allow-split buffers

Allow-split buffers will attempt to **split the item into two parts** when the free space at the tail of the buffer is insufficient to store the item data and its header. Both parts of the split item will have their own headers (therefore incurring an extra 8 bytes of overhead).

Referring to the diagram above, the 16 bytes of free space at the tail of the buffer is insufficient to store the 28 byte item. Therefore the item is split into two parts (8 and 20 bytes) and written as two parts to the buffer.

注解: Allow-split buffers treats the both parts of the split item as two separate items, therefore call *xRingbufferReceiveSplit()* instead of *xRingbufferReceive()* to receive both parts of a split item in a thread safe manner.

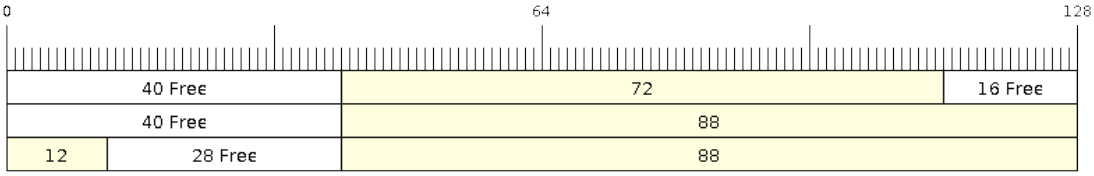

图 30: Wrap around in byte buffers

Byte buffers will **store as much data as possible into the free space at the tail of buffer**. The remaining data will then be stored in the free space at the head of the buffer. No overhead is incurred when wrapping around in byte buffers.

Referring to the diagram above, the 16 bytes of free space at the tail of the buffer is insufficient to completely store the 28 bytes of data. Therefore the 16 bytes of free space is filled with data, and the remaining 12 bytes are written to the free space at the head of the buffer. The buffer now contains data in two separate continuous parts, and each part continuous will be treated as a separate item by the byte buffer.

Retrieving/Returning

The following diagrams illustrates the differences between no-split/allow-split and byte buffers in retrieving and returning data.

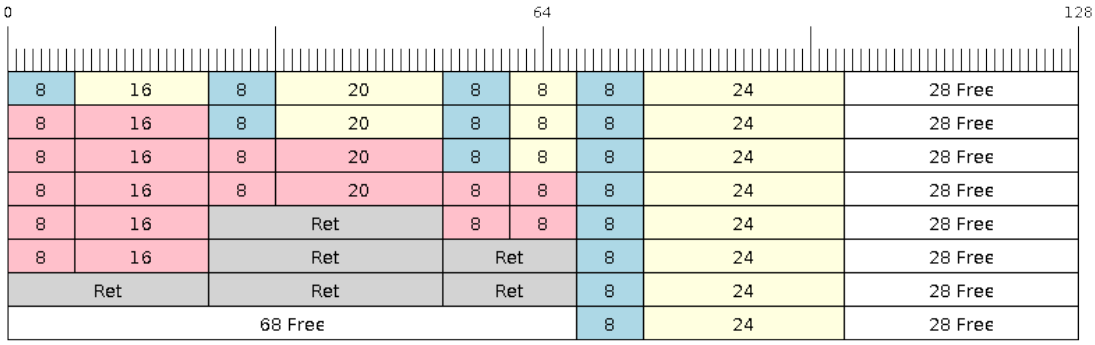

图 31: Retrieving/Returning items in no-split/allow-split ring buffers

Items in no-split/allow-split buffers are **retrieved in strict FIFO order** and **must be returned** for the occupied space to be freed. Multiple items can be retrieved before returning, and the items do not necessarily need to be returned in the order they were retrieved. However the freeing of space must occur in FIFO order, therefore not returning the earliest retrieved item will prevent the space of subsequent items from being freed.

Referring to the diagram above, the **16, 20, and 8 byte items are retrieved in FIFO order**. However the items are not returned in they were retrieved (20, 8, 16). As such, the space is not freed until the first item (16 byte) is returned.

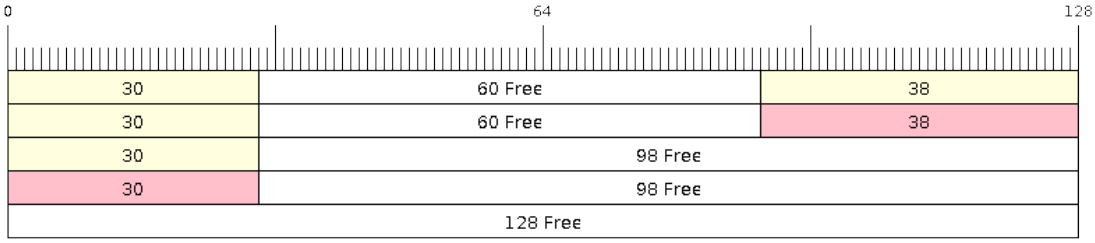

图 32: Retrieving/Returning data in byte buffers

Byte buffers **do not allow multiple retrievals before returning** (every retrieval must be followed by a return before another retrieval is permitted). When using *xRingbufferReceive()* or *xRingbufferReceiveFromISR()*, all continuous stored data will be retrieved. *xRingbufferReceiveUpTo()* or *xRingbufferReceiveUpToFromISR()* can be used to restrict the maximum number of bytes retrieved.

Since every retrieval must be followed by a return, the space will be freed as soon as the data is returned.

Referring to the diagram above, the 38 bytes of continuous stored data at the tail of the buffer is retrieved, returned, and freed. The next call to *xRingbufferReceive()* or *xRingbufferReceiveFromISR()* then wraps around and does the same to the 30 bytes of continuous stored data at the head of the buffer.

Ring Buffers with Queue Sets

Ring buffers can be added to FreeRTOS queue sets using *xRingbufferAddToQueueSetRead()* such that every time a ring buffer receives an item or data, the queue set is notified. Once added to a queue set, every attempt to retrieve an item from a ring buffer should be preceded by a call to *xQueueSelectFromSet()*. To check whether the selected queue set member is the ring buffer, call *xRingbufferCanRead()*.

The following example demonstrates queue set usage with ring buffers.

```
#include "freertos/queue.h"
#include "freertos/ringbuf.h"

...

    //Create ring buffer and queue set
    RingbufHandle_t buf_handle = xRingbufferCreate(1028, RINGBUF_TYPE_NOSPLIT);
    QueueSetHandle_t queue_set = xQueueCreateSet(3);

    //Add ring buffer to queue set
    if (xRingbufferAddToQueueSetRead(buf_handle, queue_set) != pdTRUE) {
        printf("Failed to add to queue set\n");
    }

...

    //Block on queue set
    xQueueSetMemberHandle member = xQueueSelectFromSet(queue_set, pdMS_TO_TICKS(1000));

    //Check if member is ring buffer
    if (member != NULL && xRingbufferCanRead(buf_handle, member) == pdTRUE) {
        //Member is ring buffer, receive item from ring buffer
        size_t item_size;
        char *item = (char *)xRingbufferReceive(buf_handle, &item_size, 0);

        //Handle item
        ...
```

(下页继续)

(续上页)

```
} else {
    ...
}
```

Ring Buffer API Reference

注解: Ideally, ring buffers can be used with multiple tasks in an SMP fashion where the **highest priority task will always be serviced first.** However due to the usage of binary semaphores in the ring buffer's underlying implementation, priority inversion may occur under very specific circumstances.

The ring buffer governs sending by a binary semaphore which is given whenever space is freed on the ring buffer. The highest priority task waiting to send will repeatedly take the semaphore until sufficient free space becomes available or until it times out. Ideally this should prevent any lower priority tasks from being serviced as the semaphore should always be given to the highest priority task.

However in between iterations of acquiring the semaphore, there is a **gap in the critical section** which may permit another task (on the other core or with an even higher priority) to free some space on the ring buffer and as a result give the semaphore. Therefore the semaphore will be given before the highest priority task can re-acquire the semaphore. This will result in the **semaphore being acquired by the second highest priority task** waiting to send, hence causing priority inversion.

This side effect will not affect ring buffer performance drastically given if the number of tasks using the ring buffer simultaneously is low, and the ring buffer is not operating near maximum capacity.

Header File

- esp_ringbuf/include/freertos/ringbuf.h

Functions

RingbufHandle_t **xRingbufferCreate**(size_t *xBufferSize*, *ringbuf_type_t* *xBufferType*)

Create a ring buffer.

Note xBufferSize of no-split/allow-split buffers will be rounded up to the nearest 32-bit aligned size.

Return A handle to the created ring buffer, or NULL in case of error.

Parameters

- `xBufferSize`: Size of the buffer in bytes. Note that items require space for overhead in no-split/allow-split buffers
- `xBufferType`: Type of ring buffer, see documentation.

RingbufHandle_t **xRingbufferCreateNoSplit**(size_t *xItemSize*, size_t *xItemNum*)

Create a ring buffer of type RINGBUF_TYPE_NOSPLIT for a fixed item_size.

This API is similar to xRingbufferCreate(), but it will internally allocate additional space for the headers.

Return A RingbufHandle_t handle to the created ring buffer, or NULL in case of error.

Parameters

- `xItemSize`: Size of each item to be put into the ring buffer
- `xItemNum`: Maximum number of items the buffer needs to hold simultaneously

BaseType_t **xRingbufferSend**(*RingbufHandle_t* *xRingbuffer*, `const` void **pvItem*, size_t *xItemSize*, TickType_t *xTicksToWait*)

Insert an item into the ring buffer.

Attempt to insert an item into the ring buffer. This function will block until enough free space is available or until it timesout.

Note For no-split/allow-split ring buffers, the actual size of memory that the item will occupy will be rounded up to the nearest 32-bit aligned size. This is done to ensure all items are always stored in 32-bit aligned fashion.

Return

- pdTRUE if succeeded
- pdFALSE on time-out or when the data is larger than the maximum permissible size of the buffer

Parameters

- `xRingbuffer`: Ring buffer to insert the item into
- `pvItem`: Pointer to data to insert. NULL is allowed if xItemSize is 0.
- `xItemSize`: Size of data to insert.
- `xTicksToWait`: Ticks to wait for room in the ring buffer.

BaseType_t **xRingbufferSendFromISR**(*RingbufHandle_t* *xRingbuffer*, `const` void **pvItem*, size_t *xItemSize*, BaseType_t **pxHigherPriorityTaskWoken*)

Insert an item into the ring buffer in an ISR.

Attempt to insert an item into the ring buffer from an ISR. This function will return immediately if there is insufficient free space in the buffer.

Note For no-split/allow-split ring buffers, the actual size of memory that the item will occupy will be rounded up to the nearest 32-bit aligned size. This is done to ensure all items are always stored in 32-bit aligned fashion.

Return

- pdTRUE if succeeded
- pdFALSE when the ring buffer does not have space.

Parameters

- `xRingbuffer`: Ring buffer to insert the item into
- `pvItem`: Pointer to data to insert. NULL is allowed if xItemSize is 0.
- `xItemSize`: Size of data to insert.
- `pxHigherPriorityTaskWoken`: Value pointed to will be set to pdTRUE if the function woke up a higher priority task.

void *`xRingbufferReceive`(*RingbufHandle_t xRingbuffer*, size_t **pxItemSize*, TickType_t *xTicksToWait*)

Retrieve an item from the ring buffer.

Attempt to retrieve an item from the ring buffer. This function will block until an item is available or until it timesout.

Note A call to vRingbufferReturnItem() is required after this to free the item retrieved.

Return

- Pointer to the retrieved item on success; *pxItemSize filled with the length of the item.
- NULL on timeout, *pxItemSize is untouched in that case.

Parameters

- `xRingbuffer`: Ring buffer to retrieve the item from
- `pxItemSize`: Pointer to a variable to which the size of the retrieved item will be written.
- `xTicksToWait`: Ticks to wait for items in the ring buffer.

void *`xRingbufferReceiveFromISR`(*RingbufHandle_t xRingbuffer*, size_t **pxItemSize*)

Retrieve an item from the ring buffer in an ISR.

Attempt to retrieve an item from the ring buffer. This function returns immediately if there are no items available for retrieval

Note A call to vRingbufferReturnItemFromISR() is required after this to free the item retrieved.

Note Byte buffers do not allow multiple retrievals before returning an item

Return

- Pointer to the retrieved item on success; *pxItemSize filled with the length of the item.
- NULL when the ring buffer is empty, *pxItemSize is untouched in that case.

Parameters

- `xRingbuffer`: Ring buffer to retrieve the item from
- `pxItemSize`: Pointer to a variable to which the size of the retrieved item will be written.

BaseType_t **xRingbufferReceiveSplit**(*RingbufHandle_t xRingbuffer*, void **ppvHeadItem*, void **ppvTailItem*, size_t **pxHeadItemSize*, size_t **pxTailItemSize*, TickType_t *xTicksToWait*)

Retrieve a split item from an allow-split ring buffer.

Attempt to retrieve a split item from an allow-split ring buffer. If the item is not split, only a single item is retried. If the item is split, both parts will be retrieved. This function will block until an item is available or until it timesout.

Note Call(s) to vRingbufferReturnItem() is required after this to free up the item(s) retrieved.

Note This function should only be called on allow-split buffers

Return

- pdTRUE if an item (split or unsplit) was retrieved
- pdFALSE when no item was retrieved

Parameters

- `xRingbuffer`: Ring buffer to retrieve the item from
- `ppvHeadItem`: Double pointer to first part (set to NULL if no items were retrieved)
- `ppvTailItem`: Double pointer to second part (set to NULL if item is not split)
- `pxHeadItemSize`: Pointer to size of first part (unmodified if no items were retrieved)
- `pxTailItemSize`: Pointer to size of second part (unmodified if item is not split)
- `xTicksToWait`: Ticks to wait for items in the ring buffer.

BaseType_t **xRingbufferReceiveSplitFromISR**(*RingbufHandle_t xRingbuffer*, void **ppvHeadItem*, void **ppvTailItem*, size_t **pxHeadItemSize*, size_t **pxTailItemSize*)

Retrieve a split item from an allow-split ring buffer in an ISR.

Attempt to retrieve a split item from an allow-split ring buffer. If the item is not split, only a single item is retried. If the item is split, both parts will be retrieved. This function returns immediately if there are no items available for retrieval

Note Calls to vRingbufferReturnItemFromISR() is required after this to free up the item(s) retrieved.

Note This function should only be called on allow-split buffers

Return

- pdTRUE if an item (split or unsplit) was retrieved
- pdFALSE when no item was retrieved

Parameters

- `xRingbuffer`: Ring buffer to retrieve the item from
- `ppvHeadItem`: Double pointer to first part (set to NULL if no items were retrieved)
- `ppvTailItem`: Double pointer to second part (set to NULL if item is not split)
- `pxHeadItemSize`: Pointer to size of first part (unmodified if no items were retrieved)
- `pxTailItemSize`: Pointer to size of second part (unmodified if item is not split)

void *`xRingbufferReceiveUpTo`(*RingbufHandle_t* *xRingbuffer*, size_t *pxItemSize*, TickType_t *xTicksToWait*, size_t *xMaxSize*)

Retrieve bytes from a byte buffer, specifying the maximum amount of bytes to retrieve.

Attempt to retrieve data from a byte buffer whilst specifying a maximum number of bytes to retrieve. This function will block until there is data available for retrieval or until it timesout.

Note A call to vRingbufferReturnItem() is required after this to free up the data retrieved.

Note This function should only be called on byte buffers

Note Byte buffers do not allow multiple retrievals before returning an item

Return

- Pointer to the retrieved item on success; *pxItemSize filled with the length of the item.
- NULL on timeout, *pxItemSize is untouched in that case.

Parameters

- `xRingbuffer`: Ring buffer to retrieve the item from
- `pxItemSize`: Pointer to a variable to which the size of the retrieved item will be written.
- `xTicksToWait`: Ticks to wait for items in the ring buffer.
- `xMaxSize`: Maximum number of bytes to return.

void *`xRingbufferReceiveUpToFromISR`(*RingbufHandle_t* *xRingbuffer*, size_t *pxItemSize*, size_t *xMaxSize*)

Retrieve bytes from a byte buffer, specifying the maximum amount of bytes to retrieve. Call this from an ISR.

Attempt to retrieve bytes from a byte buffer whilst specifying a maximum number of bytes to retrieve. This function will return immediately if there is no data available for retrieval.

Note A call to vRingbufferReturnItemFromISR() is required after this to free up the data received.

Note This function should only be called on byte buffers

Note Byte buffers do not allow multiple retrievals before returning an item

Return

- Pointer to the retrieved item on success; *pxItemSize filled with the length of the item.
- NULL when the ring buffer is empty, *pxItemSize is untouched in that case.

Parameters

- `xRingbuffer`: Ring buffer to retrieve the item from
- `pxItemSize`: Pointer to a variable to which the size of the retrieved item will be written.
- `xMaxSize`: Maximum number of bytes to return.

void **vRingbufferReturnItem**(*RingbufHandle_t xRingbuffer*, void **pvItem*)

Return a previously-retrieved item to the ring buffer.

Note If a split item is retrieved, both parts should be returned by calling this function twice

Parameters

- `xRingbuffer`: Ring buffer the item was retrieved from
- `pvItem`: Item that was received earlier

void **vRingbufferReturnItemFromISR**(*RingbufHandle_t xRingbuffer*, void **pvItem*, BaseType_t **pxHigherPriorityTaskWoken*)

Return a previously-retrieved item to the ring buffer from an ISR.

Note If a split item is retrieved, both parts should be returned by calling this function twice

Parameters

- `xRingbuffer`: Ring buffer the item was retrieved from
- `pvItem`: Item that was received earlier
- `pxHigherPriorityTaskWoken`: Value pointed to will be set to pdTRUE if the function woke up a higher priority task.

void **vRingbufferDelete**(*RingbufHandle_t xRingbuffer*)

Delete a ring buffer.

Parameters

- `xRingbuffer`: Ring buffer to delete

size_t **xRingbufferGetMaxItemSize**(*RingbufHandle_t xRingbuffer*)

Get maximum size of an item that can be placed in the ring buffer.

This function returns the maximum size an item can have if it was placed in an empty ring buffer.

Return Maximum size, in bytes, of an item that can be placed in a ring buffer.

Parameters

- `xRingbuffer`: Ring buffer to query

size_t **xRingbufferGetCurFreeSize**(*RingbufHandle_t xRingbuffer*)

Get current free size available for an item/data in the buffer.

This gives the real time free space available for an item/data in the ring buffer. This represents the maximum size an item/data can have if it was currently sent to the ring buffer.

Warning This API is not thread safe. So, if multiple threads are accessing the same ring buffer, it is the application's responsibility to ensure atomic access to this API and the subsequent Send

Return Current free size, in bytes, available for an entry

Parameters

- `xRingbuffer`: Ring buffer to query

BaseType_t **xRingbufferAddToQueueSetRead**(*RingbufHandle_t xRingbuffer*, *QueueSetHandle_t xQueueSet*)

Add the ring buffer's read semaphore to a queue set.

The ring buffer's read semaphore indicates that data has been written to the ring buffer. This function adds the ring buffer's read semaphore to a queue set.

Return

- pdTRUE on success, pdFALSE otherwise

Parameters

- `xRingbuffer`: Ring buffer to add to the queue set
- `xQueueSet`: Queue set to add the ring buffer's read semaphore to

BaseType_t **xRingbufferCanRead**(*RingbufHandle_t xRingbuffer*, *QueueSetMemberHandle_t xMemberber*)

Check if the selected queue set member is the ring buffer's read semaphore.

This API checks if queue set member returned from xQueueSelectFromSet() is the read semaphore of this ring buffer. If so, this indicates the ring buffer has items waiting to be retrieved.

Return

- pdTRUE when semaphore belongs to ring buffer

- pdFALSE otherwise.

Parameters

- `xRingbuffer`: Ring buffer which should be checked
- `xMember`: Member returned from xQueueSelectFromSet

BaseType_t **xRingbufferRemoveFromQueueSetRead**(*RingbufHandle_t xRingbuffer*, *QueueSetHandle_t xQueueSet*)

Remove the ring buffer's read semaphore from a queue set.

This specifically removes a ring buffer's read semaphore from a queue set. The read semaphore is used to indicate when data has been written to the ring buffer

Return

- pdTRUE on success
- pdFALSE otherwise

Parameters

- `xRingbuffer`: Ring buffer to remove from the queue set
- `xQueueSet`: Queue set to remove the ring buffer's read semaphore from

void **vRingbufferGetInfo**(*RingbufHandle_t xRingbuffer*, UBaseType_t **uxFree*, UBaseType_t **uxRead*, UBaseType_t **uxWrite*, UBaseType_t **uxItemsWaiting*)

Get information about ring buffer status.

Get information of the a ring buffer's current status such as free/read/write pointer positions, and number of items waiting to be retrieved. Arguments can be set to NULL if they are not required.

Parameters

- `xRingbuffer`: Ring buffer to remove from the queue set
- `uxFree`: Pointer use to store free pointer position
- `uxRead`: Pointer use to store read pointer position
- `uxWrite`: Pointer use to store write pointer position
- `uxItemsWaiting`: Pointer use to store number of items (bytes for byte buffer) waiting to be retrieved

void **xRingbufferPrintInfo**(*RingbufHandle_t xRingbuffer*)

Debugging function to print the internal pointers in the ring buffer.

Parameters

- `xRingbuffer`: Ring buffer to show

Type Definitions

`typedef` void *`RingbufHandle_t`

Type by which ring buffers are referenced. For example, a call to xRingbufferCreate() returns a RingbufHandle_t variable that can then be used as a parameter to xRingbufferSend(), xRingbufferReceive(), etc.

Enumerations

`enum ringbuf_type_t`

Values:

`RINGBUF_TYPE_NOSPLIT` = 0

No-split buffers will only store an item in contiguous memory and will never split an item. Each item requires an 8 byte overhead for a header and will always internally occupy a 32-bit aligned size of space.

`RINGBUF_TYPE_ALLOWSPLIT`

Allow-split buffers will split an item into two parts if necessary in order to store it. Each item requires an 8 byte overhead for a header, splitting incurs an extra header. Each item will always internally occupy a 32-bit aligned size of space.

`RINGBUF_TYPE_BYTEBUF`

Byte buffers store data as a sequence of bytes and do not maintain separate items, therefore byte buffers have no overhead. All data is stored as a sequence of byte and any number of bytes can be sent or retrieved each time.

Hooks

FreeRTOS consists of Idle Hooks and Tick Hooks which allow for application specific functionality to be added to the Idle Task and Tick Interrupt. ESP-IDF provides its own Idle and Tick Hook API in addition to the hooks provided by Vanilla FreeRTOS. ESP-IDF hooks have the added benefit of being run time configurable and asymmetrical.

Vanilla FreeRTOS Hooks

Idle and Tick Hooks in vanilla FreeRTOS are implemented by the user defining the functions `vApplicationIdleHook()` and `vApplicationTickHook()` respectively somewhere in the application. Vanilla FreeRTOS will run the user defined Idle Hook and Tick Hook on every iteration of the Idle Task and Tick Interrupt respectively.

Vanilla FreeRTOS hooks are referred to as **Legacy Hooks** in ESP-IDF FreeRTOS. To enable legacy hooks, *CONFIG_FREERTOS_LEGACY_HOOKS* should be enabled in `make menuconfig`.

Due to vanilla FreeRTOS being designed for single core, `vApplicationIdleHook()` and `vApplicationTickHook()` can only be defined once. However, the ESP32 is dual core in nature, therefore same Idle Hook and Tick Hook are used for both cores (in other words, the hooks are symmetrical for both cores).

ESP-IDF Idle and Tick Hooks

Due to the the dual core nature of the ESP32, it may be necessary for some applications to have separate hooks for each core. Furthermore, it may be necessary for the Idle Tasks or Tick Interrupts to execute multiple hooks that are configurable at run time. Therefore the ESP-IDF provides it' s own hooks API in addition to the legacy hooks provided by Vanilla FreeRTOS.

The ESP-IDF tick/idle hooks are registered at run time, and each tick/idle hook must be registered to a specific CPU. When the idle task runs/tick Interrupt occurs on a particular CPU, the CPU will run each of its registered idle/tick hooks in turn.

Hooks API Reference

Header File

- esp32/include/esp_freertos_hooks.h

Functions

esp_err_t **esp_register_freertos_idle_hook_for_cpu**(*esp_freertos_idle_cb_t new_idle_cb*, UBaseType_t *cpuid*)

Register a callback to be called from the specified core' s idle hook. The callback should return true if it should be called by the idle hook once per interrupt (or FreeRTOS tick), and return false if it should be called repeatedly as fast as possible by the idle hook.

Warning Idle callbacks MUST NOT, UNDER ANY CIRCUMSTANCES, CALL A FUNCTION THAT MIGHT BLOCK.

Return

- ESP_OK: Callback registered to the specified core' s idle hook
- ESP_ERR_NO_MEM: No more space on the specified core' s idle hook to register callback
- ESP_ERR_INVALID_ARG: cpuid is invalid

Parameters

- `new_idle_cb`: Callback to be called
- `cpuid`: id of the core

esp_err_t **esp_register_freertos_idle_hook**(*esp_freertos_idle_cb_t new_idle_cb*)

Register a callback to the idle hook of the core that calls this function. The callback should return true if it should be called by the idle hook once per interrupt (or FreeRTOS tick), and return false if it should be called repeatedly as fast as possible by the idle hook.

Warning Idle callbacks MUST NOT, UNDER ANY CIRCUMSTANCES, CALL A FUNCTION THAT MIGHT BLOCK.

Return

- ESP_OK: Callback registered to the calling core's idle hook
- ESP_ERR_NO_MEM: No more space on the calling core's idle hook to register callback

Parameters

- `new_idle_cb`: Callback to be called

esp_err_t **esp_register_freertos_tick_hook_for_cpu**(*esp_freertos_tick_cb_t new_tick_cb*, UBaseType_t *cpuid*)

Register a callback to be called from the specified core's tick hook.

Return

- ESP_OK: Callback registered to specified core's tick hook
- ESP_ERR_NO_MEM: No more space on the specified core's tick hook to register the callback
- ESP_ERR_INVALID_ARG: cpuid is invalid

Parameters

- `new_tick_cb`: Callback to be called
- `cpuid`: id of the core

esp_err_t **esp_register_freertos_tick_hook**(*esp_freertos_tick_cb_t new_tick_cb*)

Register a callback to be called from the calling core's tick hook.

Return

- ESP_OK: Callback registered to the calling core's tick hook
- ESP_ERR_NO_MEM: No more space on the calling core's tick hook to register the callback

Parameters

- `new_tick_cb`: Callback to be called

void **esp_deregister_freertos_idle_hook_for_cpu**(*esp_freertos_idle_cb_t old_idle_cb*, UBaseType_t *cpuid*)

Unregister an idle callback from the idle hook of the specified core.

Parameters

- `old_idle_cb`: Callback to be unregistered
- `cpuid`: id of the core

void **esp_deregister_freertos_idle_hook**(*esp_freertos_idle_cb_t old_idle_cb*)

Unregister an idle callback. If the idle callback is registered to the idle hooks of both cores, the idle hook will be unregistered from both cores.

Parameters

- `old_idle_cb`: Callback to be unregistered

void **esp_deregister_freertos_tick_hook_for_cpu**(*esp_freertos_tick_cb_t old_tick_cb*, UBaseType_t *cpuid*)

Unregister a tick callback from the tick hook of the specified core.

Parameters

- `old_tick_cb`: Callback to be unregistered
- `cpuid`: id of the core

void **esp_deregister_freertos_tick_hook**(*esp_freertos_tick_cb_t old_tick_cb*)

Unregister a tick callback. If the tick callback is registered to the tick hooks of both cores, the tick hook will be unregistered from both cores.

Parameters

- `old_tick_cb`: Callback to be unregistered

Type Definitions

typedef bool (***esp_freertos_idle_cb_t**)()

typedef void (***esp_freertos_tick_cb_t**)()

3.7.3 Heap Memory Allocation

Stack and Heap

ESP-IDF applications use the common computer architecture patterns of *stack* (dynamic memory allocated by program control flow) and *heap* (dynamic memory allocated by function calls), as well as statically allocated memory (allocated at compile time).

Because ESP-IDF is a multi-threaded RTOS environment, each RTOS task has its own stack. By default, each of these stacks is allocated from the heap when the task is created. (See *xTaskCreateStatic()* for the alternative where stacks are statically allocated.)

Because ESP32 uses multiple types of RAM, it also contains multiple heaps with different capabilities. A capabilities-based memory allocator allows apps to make heap allocations for different purposes.

For most purposes, the standard libc `malloc()` and `free()` functions can be used for heap allocation without any special consideration.

However, in order to fully make use of all of the memory types and their characteristics, ESP-IDF also has a capabilities-based heap memory allocator. If you want to have memory with certain properties (for example, *DMA-Capable Memory* or executable-memory), you can create an OR-mask of the required capabilities and pass that to *heap_caps_malloc()*.

Memory Capabilities

The ESP32 contains multiple types of RAM:

- DRAM (Data RAM) is memory used to hold data. This is the most common kind of memory accessed as heap.
- IRAM (Instruction RAM) usually holds executable data only. If accessed as generic memory, all accesses must be *32-bit aligned*.
- D/IRAM is RAM which can be used as either Instruction or Data RAM.

For more details on these internal memory types, see *应用程序的内存布局*.

It's also possible to connect external SPI RAM to the ESP32 - *external RAM* can be integrated into the ESP32's memory map using the flash cache, and accessed similarly to DRAM.

DRAM uses capability `MALLOC_CAP_8BIT` (accessible in single byte reads and writes). When calling `malloc()`, the ESP-IDF `malloc()` implementation internally calls `heap_caps_malloc(size, MALLOC_CAP_8BIT)` in order to allocate DRAM that is byte-addressable. To test the free DRAM heap size at runtime, call cpp:func:*heap_caps_get_free_size(MALLOC_CAP_8BIT)*.

Because malloc uses the capabilities-based allocation system, memory allocated using *heap_caps_malloc()* can be freed by calling the standard `free()` function.

Available Heap

DRAM

At startup, the DRAM heap contains all data memory which is not statically allocated by the app. Reducing statically allocated buffers will increase the amount of available free heap.

To find the amount of statically allocated memory, use the *make size* or *idf.py size* (for CMake) command.

注解: Due to a technical limitation, the maximum statically allocated DRAM usage is 160KB. The remaining 160KB (for a total of 320KB of DRAM) can only be allocated at runtime as heap.

注解: At runtime, the available heap DRAM may be less than calculated at compile time, because at startup some memory is allocated from the heap before the FreeRTOS scheduler is started (including memory for the stacks of initial FreeRTOS tasks).

IRAM

At startup, the IRAM heap contains all instruction memory which is not used by the app executable code.

The *make size* and *idf.py size* commands can be used to find the amount of IRAM used by the app.

D/IRAM

Some memory in the ESP32 is available as either DRAM or IRAM. If memory is allocated from a D/IRAM region, the free heap size for both types of memory will decrease.

Heap Sizes

At startup, all ESP-IDF apps log a summary of all heap addresses (and sizes) at level Info:

```
I (252) heap_init: Initializing. RAM available for dynamic allocation:
I (259) heap_init: At 3FFAE6E0 len 00001920 (6 KiB): DRAM
I (265) heap_init: At 3FFB2EC8 len 0002D138 (180 KiB): DRAM
I (272) heap_init: At 3FFE0440 len 00003AE0 (14 KiB): D/IRAM
I (278) heap_init: At 3FFE4350 len 0001BCB0 (111 KiB): D/IRAM
I (284) heap_init: At 4008944C len 00016BB4 (90 KiB): IRAM
```

Finding available heap

See *Heap Information*.

Special Capabilities

DMA-Capable Memory

Use the `MALLOC_CAP_DMA` flag to allocate memory which is suitable for use with hardware DMA engines (for example SPI and I2S). This capability flag excludes any external PSRAM.

32-Bit Accessible Memory

If a certain memory structure is only addressed in 32-bit units, for example an array of ints or pointers, it can be useful to allocate it with the `MALLOC_CAP_32BIT` flag. This also allows the allocator to give out IRAM memory; something which it can't do for a normal malloc() call. This can help to use all the available memory in the ESP32.

Memory allocated with `MALLOC_CAP_32BIT` can *only* be accessed via 32-bit reads and writes, any other type of access will generate a fatal LoadStoreError exception.

External SPI Memory

When *external RAM* is enabled, external SPI RAM under 4MiB in size can be allocated using standard `malloc` calls, or via `heap_caps_malloc(MALLOC_CAP_SPIRAM)`, depending on configuration. See *Configuring External RAM* for more details.

To use the region above the 4MiB limit, you can use the *himem API*.

API Reference - Heap Allocation

Header File

- heap/include/esp_heap_caps.h

Functions

void *`heap_caps_malloc`(size_t *size*, uint32_t *caps*)

Allocate a chunk of memory which has the given capabilities.

Equivalent semantics to libc malloc(), for capability-aware memory.

In IDF, `malloc(p)` is equivalent to `heap_caps_malloc(p, MALLOC_CAP_8BIT)`.

Return A pointer to the memory allocated on success, NULL on failure

Parameters

- `size`: Size, in bytes, of the amount of memory to allocate
- `caps`: Bitwise OR of MALLOC_CAP_* flags indicating the type of memory to be returned

void **heap_caps_free**(void *_ptr_)

Free memory previously allocated via heap_caps_malloc() or heap_caps_realloc().

Equivalent semantics to libc free(), for capability-aware memory.

In IDF, `free(p)` is equivalent to `heap_caps_free(p)`.

Parameters

- `ptr`: Pointer to memory previously returned from heap_caps_malloc() or heap_caps_realloc(). Can be NULL.

void ***heap_caps_realloc**(void *_ptr_, size_t _size_, int _caps_)

Reallocate memory previously allocated via heap_caps_malloc() or heap_caps_realloc().

Equivalent semantics to libc realloc(), for capability-aware memory.

In IDF, `realloc(p, s)` is equivalent to `heap_caps_realloc(p, s, MALLOC_CAP_8BIT)`.

'caps' parameter can be different to the capabilities that any original 'ptr' was allocated with. In this way, realloc can be used to "move" a buffer if necessary to ensure it meets a new set of capabilities.

Return Pointer to a new buffer of size 'size' with capabilities 'caps', or NULL if allocation failed.

Parameters

- `ptr`: Pointer to previously allocated memory, or NULL for a new allocation.
- `size`: Size of the new buffer requested, or 0 to free the buffer.
- `caps`: Bitwise OR of MALLOC_CAP_* flags indicating the type of memory desired for the new allocation.

void ***heap_caps_calloc**(size_t _n_, size_t _size_, uint32_t _caps_)

Allocate a chunk of memory which has the given capabilities. The initialized value in the memory is set to zero.

Equivalent semantics to libc calloc(), for capability-aware memory.

In IDF, `calloc(p)` is equivalent to `heap_caps_calloc(p, MALLOC_CAP_8BIT)`.

Return A pointer to the memory allocated on success, NULL on failure

Parameters

- `n`: Number of continuing chunks of memory to allocate
- `size`: Size, in bytes, of a chunk of memory to allocate
- `caps`: Bitwise OR of MALLOC_CAP_* flags indicating the type of memory to be returned

size_t **heap_caps_get_free_size**(uint32_t *caps*)

Get the total free size of all the regions that have the given capabilities.

This function takes all regions capable of having the given capabilities allocated in them and adds up the free space they have.

Note that because of heap fragmentation it is probably not possible to allocate a single block of memory of this size. Use heap_caps_get_largest_free_block() for this purpose.

Return Amount of free bytes in the regions

Parameters

- `caps`: Bitwise OR of MALLOC_CAP_* flags indicating the type of memory

size_t **heap_caps_get_minimum_free_size**(uint32_t *caps*)

Get the total minimum free memory of all regions with the given capabilities.

This adds all the low water marks of the regions capable of delivering the memory with the given capabilities.

Note the result may be less than the global all-time minimum available heap of this kind, as "low water marks" are tracked per-region. Individual regions' heaps may have reached their "low water marks" at different points in time. However this result still gives a "worst case" indication for all-time minimum free heap.

Return Amount of free bytes in the regions

Parameters

- `caps`: Bitwise OR of MALLOC_CAP_* flags indicating the type of memory

size_t **heap_caps_get_largest_free_block**(uint32_t *caps*)

Get the largest free block of memory able to be allocated with the given capabilities.

Returns the largest value of `s` for which `heap_caps_malloc(s, caps)` will succeed.

Return Size of largest free block in bytes.

Parameters

- `caps`: Bitwise OR of MALLOC_CAP_* flags indicating the type of memory

void **heap_caps_get_info**(*multi_heap_info_t* **info*, uint32_t *caps*)

Get heap info for all regions with the given capabilities.

Calls multi_heap_info() on all heaps which share the given capabilities. The information returned is an aggregate across all matching heaps. The meanings of fields are the same as defined for *multi_heap_info_t*, except that `minimum_free_bytes` has the same caveats described in heap_caps_get_minimum_free_size().

Parameters

- `info`: Pointer to a structure which will be filled with relevant heap metadata.
- `caps`: Bitwise OR of MALLOC_CAP_* flags indicating the type of memory

void **heap_caps_print_heap_info**(uint32_t *caps*)

Print a summary of all memory with the given capabilities.

Calls multi_heap_info on all heaps which share the given capabilities, and prints a two-line summary for each, then a total summary.

Parameters

- `caps`: Bitwise OR of MALLOC_CAP_* flags indicating the type of memory

bool **heap_caps_check_integrity_all**(bool *print_errors*)

Check integrity of all heap memory in the system.

Calls multi_heap_check on all heaps. Optionally print errors if heaps are corrupt.

Calling this function is equivalent to calling heap_caps_check_integrity with the caps argument set to MALLOC_CAP_INVALID.

Return True if all heaps are valid, False if at least one heap is corrupt.

Parameters

- `print_errors`: Print specific errors if heap corruption is found.

bool **heap_caps_check_integrity**(uint32_t *caps*, bool *print_errors*)

Check integrity of all heaps with the given capabilities.

Calls multi_heap_check on all heaps which share the given capabilities. Optionally print errors if the heaps are corrupt.

See also heap_caps_check_integrity_all to check all heap memory in the system and heap_caps_check_integrity_addr to check memory around a single address.

Return True if all heaps are valid, False if at least one heap is corrupt.

Parameters

- `caps`: Bitwise OR of MALLOC_CAP_* flags indicating the type of memory
- `print_errors`: Print specific errors if heap corruption is found.

bool **heap_caps_check_integrity_addr**(intptr_t *addr*, bool *print_errors*)

Check integrity of heap memory around a given address.

This function can be used to check the integrity of a single region of heap memory, which contains the given address.

This can be useful if debugging heap integrity for corruption at a known address, as it has a lower overhead than checking all heap regions. Note that if the corrupt address moves around between runs (due to timing or other factors) then this approach won't work and you should call heap_caps_check_integrity or heap_caps_check_integrity_all instead.

Note The entire heap region around the address is checked, not only the adjacent heap blocks.

Return True if the heap containing the specified address is valid, False if at least one heap is corrupt or the address doesn't belong to a heap region.

Parameters

- `addr`: Address in memory. Check for corruption in region containing this address.
- `print_errors`: Print specific errors if heap corruption is found.

void **heap_caps_malloc_extmem_enable**(size_t *limit*)

Enable malloc() in external memory and set limit below which malloc() attempts are placed in internal memory.

When external memory is in use, the allocation strategy is to initially try to satisfy smaller allocation requests with internal memory and larger requests with external memory. This sets the limit between the two, as well as generally enabling allocation in external memory.

Parameters

- `limit`: Limit, in bytes.

void ***heap_caps_malloc_prefer**(size_t *size*, size_t *num*, ...)

Allocate a chunk of memory as preference in decreasing order.

Attention The variable parameters are bitwise OR of MALLOC_CAP_* flags indicating the type of memory. This API prefers to allocate memory with the first parameter. If failed, allocate memory with the next parameter. It will try in this order until allocating a chunk of memory successfully or fail to allocate memories with any of the parameters.

Return A pointer to the memory allocated on success, NULL on failure

Parameters

- `size`: Size, in bytes, of the amount of memory to allocate
- `num`: Number of variable paramters

void ***heap_caps_realloc_prefer**(void **ptr*, size_t *size*, size_t *num*, ...)

Allocate a chunk of memory as preference in decreasing order.

Return Pointer to a new buffer of size 'size', or NULL if allocation failed.

Parameters

- `ptr`: Pointer to previously allocated memory, or NULL for a new allocation.
- `size`: Size of the new buffer requested, or 0 to free the buffer.
- `num`: Number of variable paramters

void *`heap_caps_calloc_prefer`(size_t *n*, size_t *size*, size_t *num*, ...)

Allocate a chunk of memory as preference in decreasing order.

Return A pointer to the memory allocated on success, NULL on failure

Parameters

- `n`: Number of continuing chunks of memory to allocate
- `size`: Size, in bytes, of a chunk of memory to allocate
- `num`: Number of variable paramters

void `heap_caps_dump`(uint32_t *caps*)

Dump the full structure of all heaps with matching capabilities.

Prints a large amount of output to serial (because of locking limitations, the output bypasses stdout/stderr). For each (variable sized) block in each matching heap, the following output is printed on a single line:

- Block address (the data buffer returned by malloc is 4 bytes after this if heap debugging is set to Basic, or 8 bytes otherwise).
- Data size (the data size may be larger than the size requested by malloc, either due to heap fragmentation or because of heap debugging level).
- Address of next block in the heap.
- If the block is free, the address of the next free block is also printed.

Parameters

- `caps`: Bitwise OR of MALLOC_CAP_* flags indicating the type of memory

void `heap_caps_dump_all`()

Dump the full structure of all heaps.

Covers all registered heaps. Prints a large amount of output to serial.

Output is the same as for heap_caps_dump.

Macros

`MALLOC_CAP_EXEC`

Flags to indicate the capabilities of the various memory systems.

Memory must be able to run executable code

`MALLOC_CAP_32BIT`
Memory must allow for aligned 32-bit data accesses.

`MALLOC_CAP_8BIT`
Memory must allow for 8/16/…-bit data accesses.

`MALLOC_CAP_DMA`
Memory must be able to accessed by DMA.

`MALLOC_CAP_PID2`
Memory must be mapped to PID2 memory space (PIDs are not currently used)

`MALLOC_CAP_PID3`
Memory must be mapped to PID3 memory space (PIDs are not currently used)

`MALLOC_CAP_PID4`
Memory must be mapped to PID4 memory space (PIDs are not currently used)

`MALLOC_CAP_PID5`
Memory must be mapped to PID5 memory space (PIDs are not currently used)

`MALLOC_CAP_PID6`
Memory must be mapped to PID6 memory space (PIDs are not currently used)

`MALLOC_CAP_PID7`
Memory must be mapped to PID7 memory space (PIDs are not currently used)

`MALLOC_CAP_SPIRAM`
Memory must be in SPI RAM.

`MALLOC_CAP_INTERNAL`
Memory must be internal; specifically it should not disappear when flash/spiram cache is switched off.

`MALLOC_CAP_DEFAULT`
Memory can be returned in a non-capability-specific memory allocation (e.g. malloc(), calloc()) call.

`MALLOC_CAP_INVALID`
Memory can’ t be used / list end marker.

Heap Tracing & Debugging

The following features are documented on the *Heap Memory Debugging* page:

- *Heap Information* (free space, etc.)
- *Heap Corruption Detection*
- *Heap Tracing* (memory leak detection, monitoring, etc.)

API Reference - Initialisation

Header File

- heap/include/esp_heap_caps_init.h

Functions

void **heap_caps_init()**

Initialize the capability-aware heap allocator.

This is called once in the IDF startup code. Do not call it at other times.

void **heap_caps_enable_nonos_stack_heaps()**

Enable heap(s) in memory regions where the startup stacks are located.

On startup, the pro/app CPUs have a certain memory region they use as stack, so we cannot do allocations in the regions these stack frames are. When FreeRTOS is completely started, they do not use that memory anymore and heap(s) there can be enabled.

esp_err_t **heap_caps_add_region**(intptr_t *start*, intptr_t *end*)

Add a region of memory to the collection of heaps at runtime.

Most memory regions are defined in soc_memory_layout.c for the SoC, and are registered via heap_caps_init(). Some regions can' t be used immediately and are later enabled via heap_caps_enable_nonos_stack_heaps().

Call this function to add a region of memory to the heap at some later time.

This function does not consider any of the "reserved" regions or other data in soc_memory_layout, caller needs to consider this themselves.

All memory within the region specified by start & end parameters must be otherwise unused.

The capabilities of the newly registered memory will be determined by the start address, as looked up in the regions specified in soc_memory_layout.c.

Use heap_caps_add_region_with_caps() to register a region with custom capabilities.

Return ESP_OK on success, ESP_ERR_INVALID_ARG if a parameter is invalid, ESP_ERR_NOT_FOUND if the specified start address doesn' t reside in a known region, or any error returned by heap_caps_add_region_with_caps().

Parameters

- `start`: Start address of new region.
- `end`: End address of new region.

esp_err_t **heap_caps_add_region_with_caps**(**const** uint32_t *caps*[], intptr_t *start*, intptr_t *end*)

Add a region of memory to the collection of heaps at runtime, with custom capabilities.

Similar to heap_caps_add_region(), only custom memory capabilities are specified by the caller.

Return

- ESP_OK on success
- ESP_ERR_INVALID_ARG if a parameter is invalid
- ESP_ERR_NO_MEM if no memory to register new heap.
- ESP_ERR_INVALID_SIZE if the memory region is too small to fit a heap
- ESP_FAIL if region overlaps the start and/or end of an existing region

Parameters

- `caps`: Ordered array of capability masks for the new region, in order of priority. Must have length SOC_MEMORY_TYPE_NO_PRIOS. Does not need to remain valid after the call returns.
- `start`: Start address of new region.
- `end`: End address of new region.

Implementation Notes

Knowledge about the regions of memory in the chip comes from the "soc"component, which contains memory layout information for the chip, and the different capabilities of each region. Each region' s capabilities are prioritised, so that (for example) dedicated DRAM and IRAM regions will be used for allocations ahead of the more versatile D/IRAM regions.

Each contiguous region of memory contains its own memory heap. The heaps are created using the multi_heap functionality. multi_heap allows any contiguous region of memory to be used as a heap.

The heap capabilities allocator uses knowledge of the memory regions to initialize each individual heap. Allocation functions in the heap capabilities API will find the most appropriate heap for the allocation (based on desired capabilities, available space, and preferences for each region' s use) and then calling *multi_heap_malloc()* or `multi_heap_calloc()` for the heap situated in that particular region.

Calling `free()` involves finding the particular heap corresponding to the freed address, and then calling *multi_heap_free()* on that particular multi_heap instance.

API Reference - Multi Heap API

(Note: The multi heap API is used internally by the heap capabilities allocator. Most IDF programs will never need to call this API directly.)

Header File

- heap/include/multi_heap.h

Functions

void *`multi_heap_malloc`(*multi_heap_handle_t* *heap*, size_t *size*)

malloc() a buffer in a given heap

Semantics are the same as standard malloc(), only the returned buffer will be allocated in the specified heap.

Return Pointer to new memory, or NULL if allocation fails.

Parameters

- `heap`: Handle to a registered heap.
- `size`: Size of desired buffer.

void `multi_heap_free`(*multi_heap_handle_t* *heap*, void *p)

free() a buffer in a given heap.

Semantics are the same as standard free(), only the argument 'p' must be NULL or have been allocated in the specified heap.

Parameters

- `heap`: Handle to a registered heap.
- `p`: NULL, or a pointer previously returned from multi_heap_malloc() or multi_heap_realloc() for the same heap.

void *`multi_heap_realloc`(*multi_heap_handle_t* *heap*, void *p, size_t *size*)

realloc() a buffer in a given heap.

Semantics are the same as standard realloc(), only the argument 'p' must be NULL or have been allocated in the specified heap.

Return New buffer of 'size' containing contents of 'p', or NULL if reallocation failed.

Parameters

- `heap`: Handle to a registered heap.
- `p`: NULL, or a pointer previously returned from multi_heap_malloc() or multi_heap_realloc() for the same heap.
- `size`: Desired new size for buffer.

size_t **multi_heap_get_allocated_size**(*multi_heap_handle_t* *heap*, void *p)

Return the size that a particular pointer was allocated with.

Return Size of the memory allocated at this block. May be more than the original size argument, due to padding and minimum block sizes.

Parameters

- `heap`: Handle to a registered heap.
- `p`: Pointer, must have been previously returned from multi_heap_malloc() or multi_heap_realloc() for the same heap.

multi_heap_handle_t **multi_heap_register**(void *start, size_t *size*)

Register a new heap for use.

This function initialises a heap at the specified address, and returns a handle for future heap operations.

There is no equivalent function for deregistering a heap - if all blocks in the heap are free, you can immediately start using the memory for other purposes.

Return Handle of a new heap ready for use, or NULL if the heap region was too small to be initialised.

Parameters

- `start`: Start address of the memory to use for a new heap.
- `size`: Size (in bytes) of the new heap.

void **multi_heap_set_lock**(*multi_heap_handle_t* *heap*, void *lock)

Associate a private lock pointer with a heap.

The lock argument is supplied to the MULTI_HEAP_LOCK() and MULTI_HEAP_UNLOCK() macros, defined in multi_heap_platform.h.

The lock in question must be recursive.

When the heap is first registered, the associated lock is NULL.

Parameters

- `heap`: Handle to a registered heap.
- `lock`: Optional pointer to a locking structure to associate with this heap.

void **multi_heap_dump**(*multi_heap_handle_t* *heap*)

Dump heap information to stdout.

For debugging purposes, this function dumps information about every block in the heap to stdout.

Parameters

- `heap`: Handle to a registered heap.

bool **multi_heap_check**(*multi_heap_handle_t* *heap*, bool *print_errors*)

Check heap integrity.

Walks the heap and checks all heap data structures are valid. If any errors are detected, an error-specific message can be optionally printed to stderr. Print behaviour can be overriden at compile time by defining MULTI_CHECK_FAIL_PRINTF in multi_heap_platform.h.

Return true if heap is valid, false otherwise.

Parameters

- `heap`: Handle to a registered heap.
- `print_errors`: If true, errors will be printed to stderr.

size_t **multi_heap_free_size**(*multi_heap_handle_t* *heap*)

Return free heap size.

Returns the number of bytes available in the heap.

Equivalent to the total_free_bytes member returned by multi_heap_get_heap_info().

Note that the heap may be fragmented, so the actual maximum size for a single malloc() may be lower. To know this size, see the largest_free_block member returned by multi_heap_get_heap_info().

Return Number of free bytes.

Parameters

- `heap`: Handle to a registered heap.

size_t **multi_heap_minimum_free_size**(*multi_heap_handle_t* *heap*)

Return the lifetime minimum free heap size.

Equivalent to the minimum_free_bytes member returned by multi_heap_get_info().

Returns the lifetime "low water mark" of possible values returned from multi_free_heap_size(), for the specified heap.

Return Number of free bytes.

Parameters

- `heap`: Handle to a registered heap.

void **multi_heap_get_info**(*multi_heap_handle_t* *heap*, *multi_heap_info_t* **info*)

Return metadata about a given heap.

Fills a *multi_heap_info_t* structure with information about the specified heap.

Parameters

- `heap`: Handle to a registered heap.
- `info`: Pointer to a structure to fill with heap metadata.

Structures

struct multi_heap_info_t

Structure to access heap metadata via multi_heap_get_info.

Public Members

size_t **total_free_bytes**

Total free bytes in the heap. Equivalent to multi_free_heap_size().

size_t **total_allocated_bytes**

Total bytes allocated to data in the heap.

size_t **largest_free_block**

Size of largest free block in the heap. This is the largest malloc-able size.

size_t **minimum_free_bytes**

Lifetime minimum free heap size. Equivalent to multi_minimum_free_heap_size().

size_t **allocated_blocks**

Number of (variable size) blocks allocated in the heap.

size_t **free_blocks**

Number of (variable size) free blocks in the heap.

size_t **total_blocks**

Total number of (variable size) blocks in the heap.

Type Definitions

typedef struct multi_heap_info ***multi_heap_handle_t**

Opaque handle to a registered heap.

3.7.4 Heap Memory Debugging

Overview

ESP-IDF integrates tools for requesting *heap information*, *detecting heap corruption*, and *tracing memory leaks*. These can help track down memory-related bugs.

For general information about the heap memory allocator, see the *Heap Memory Allocation* page.

Heap Information

To obtain information about the state of the heap:

- `xPortGetFreeHeapSize()` is a FreeRTOS function which returns the number of free bytes in the (data memory) heap. This is equivalent to calling `heap_caps_get_free_size(MALLOC_CAP_8BIT)`.
- *heap_caps_get_free_size()* can also be used to return the current free memory for different memory capabilities.
- *heap_caps_get_largest_free_block()* can be used to return the largest free block in the heap. This is the largest single allocation which is currently possible. Tracking this value and comparing to total free heap allows you to detect heap fragmentation.
- `xPortGetMinimumEverFreeHeapSize()` and the related *heap_caps_get_minimum_free_size()* can be used to track the heap "low water mark" since boot.
- *heap_caps_get_info()* returns a *multi_heap_info_t* structure which contains the information from the above functions, plus some additional heap-specific data (number of allocations, etc.).
- *heap_caps_print_heap_info()* prints a summary to stdout of the information returned by *heap_caps_get_info()*.
- *heap_caps_dump()* and *heap_caps_dump_all()* will output detailed information about the structure of each block in the heap. Note that this can be large amount of output.

Heap Corruption Detection

Heap corruption detection allows you to detect various types of heap memory errors:

- Out of bounds writes & buffer overflow.
- Writes to freed memory.
- Reads from freed or uninitialized memory,

Assertions

The heap implementation (`multi_heap.c`, etc.) includes a lot of assertions which will fail if the heap memory is corrupted. To detect heap corruption most effectively, ensure that assertions are enabled in `make menuconfig` under `Compiler options`.

If a heap integrity assertion fails, a line will be printed like `CORRUPT HEAP: multi_heap.c:225 detected at 0x3ffbb71c`. The memory address which is printed is the address of the heap structure which has corrupt content.

It's also possible to manually check heap integrity by calling *heap_caps_check_integrity_all()* or related functions. This function checks all of requested heap memory for integrity, and can be used even if assertions are disabled. If the integrity check prints an error, it will also contain the address(es) of corrupt heap structures.

Finding Heap Corruption

Memory corruption can be one of the hardest classes of bugs to find and fix, as one area of memory can be corrupted from a totally different place. Some tips:

- A crash with a `CORRUPT HEAP:` message will usually include a stack trace, but this stack trace is rarely useful. The crash is the symptom of memory corruption when the system realises the heap is corrupt, but usually the corruption happened elsewhere and earlier in time.
- Increasing the Heap memory debugging *Configuration* level to "Light impact" or "Comprehensive" can give you a more accurate message with the first corrupt memory address.
- Adding regular calls to *heap_caps_check_integrity_all()* or *heap_caps_check_integrity_addr()* in your code will help you pin down the exact time that the corruption happened. You can move these checks around to "close in on" the section of code that corrupted the heap.
- Based on the memory address which is being corrupted, you can use *JTAG debugging* to set a watchpoint on this address and have the CPU halt when it is written to.
- If you don't have JTAG, but you do know roughly when the corruption happens, then you can set a watchpoint in software just beforehand via `esp_set_watchpoint()`. A fatal exception will occur when the watchpoint triggers. For example `esp_set_watchpoint(0, (void *)addr, 4, ESP_WATCHPOINT_STORE`. Note that watchpoints are per-CPU and are set on the current running CPU only, so if you don't know which CPU is corrupting memory then you will need to call this function on both CPUs.
- For buffer overflows, *heap tracing* in `HEAP_TRACE_ALL` mode lets you see which callers are allocating which addresses from the heap. See *Heap Tracing To Find Heap Corruption* for more details. If you can find the function which allocates memory with an address immediately before the address which is corrupted, this will probably be the function which overflows the buffer.
- Calling *heap_caps_dump()* or *heap_caps_dump_all()* can give an indication of what heap blocks are surrounding the corrupted region and may have overflowed/underflowed/etc.

Configuration

Temporarily increasing the heap corruption detection level can give more detailed information about heap corruption errors.

In `make menuconfig`, under `Component config` there is a menu `Heap memory debugging`. The setting *CONFIG_HEAP_CORRUPTION_DETECTION* can be set to one of three levels:

Basic (no poisoning)

This is the default level. No special heap corruption features are enabled, but provided assertions are enabled (the default configuration) then a heap corruption error will be printed if any of the heap' s internal data structures appear overwritten or corrupted. This usually indicates a buffer overrun or out of bounds write.

If assertions are enabled, an assertion will also trigger if a double-free occurs (the same memory is freed twice).

Calling *heap_caps_check_integrity()* in Basic mode will check the integrity of all heap structures, and print errors if any appear to be corrupted.

Light Impact

At this level, heap memory is additionally "poisoned" with head and tail "canary bytes" before and after each block which is allocated. If an application writes outside the bounds of allocated buffers, the canary bytes will be corrupted and the integrity check will fail.

The head canary word is 0xABBA1234 (3412BAAB in byte order), and the tail canary word is 0xBAAD5678 (7856ADBA in byte order).

"Basic" heap corruption checks can also detect most out of bounds writes, but this setting is more precise as even a single byte overrun can be detected. With Basic heap checks, the number of overrun bytes before a failure is detected will depend on the properties of the heap.

Enabling "Light Impact" checking increases memory usage, each individual allocation will use 9 to 12 additional bytes of memory (depending on alignment).

Each time `free()` is called in Light Impact mode, the head and tail canary bytes of the buffer being freed are checked against the expected values.

When *heap_caps_check_integrity()* is called, all allocated blocks of heap memory have their canary bytes checked against the expected values.

In both cases, the check is that the first 4 bytes of an allocated block (before the buffer returned to the user) should be the word 0xABBA1234. Then the last 4 bytes of the allocated block (after the buffer returned to the user) should be the word 0xBAAD5678.

Different values usually indicate buffer underrun or overrun, respectively.

Comprehensive

This level incorporates the "light impact" detection features plus additional checks for uninitialised-access and use-after-free bugs. In this mode, all freshly allocated memory is filled with the pattern 0xCE, and all freed memory is filled with the pattern 0xFE.

Enabling "Comprehensive" detection has a substantial runtime performance impact (as all memory needs to be set to the allocation patterns each time a malloc/free completes, and the memory also needs to be checked each time.) However it allows easier detection of memory corruption bugs which are much more subtle to find otherwise. It is recommended to only enable this mode when debugging, not in production.

Crashes in Comprehensive Mode

If an application crashes reading/writing an address related to 0xCECECECE in Comprehensive mode, this indicates it has read uninitialized memory. The application should be changed to either use calloc() (which zeroes memory), or initialize the memory before using it. The value 0xCECECECE may also be seen in stack-allocated automatic variables, because in IDF most task stacks are originally allocated from the heap and in C stack memory is uninitialized by default.

If an application crashes and the exception register dump indicates that some addresses or values were 0xFEFEFEFE, this indicates it is reading heap memory after it has been freed (a "use after free bug" .) The application should be changed to not access heap memory after it has been freed.

If a call to malloc() or realloc() causes a crash because it expected to find the pattern 0xFEFEFEFE in free memory and a different pattern was found, then this indicates the app has a use-after-free bug where it is writing to memory which has already been freed.

Manual Heap Checks in Comprehensive Mode

Calls to *heap_caps_check_integrity()* may print errors relating to 0xFEFEFEFE, 0xABBA1234 or 0xBAAD5678. In each case the checker is expecting to find a given pattern, and will error out if this is not found:

- For free heap blocks, the checker expects to find all bytes set to 0xFE. Any other values indicate a use-after-free bug where free memory has been incorrectly overwritten.
- For allocated heap blocks, the behaviour is the same as for *Light Impact* mode. The canary bytes 0xABBA1234 and 0xBAAD5678 are checked at the head and tail of each allocated buffer, and any variation indicates a buffer overrun/underrun.

Heap Tracing

Heap Tracing allows tracing of code which allocates/frees memory.

注解: Heap tracing "standalone" mode is currently implemented, meaning that tracing does not require any external hardware but uses internal memory to hold trace data. Heap tracing via JTAG trace port is also planned.

Heap tracing can perform two functions:

- Leak checking: find memory which is allocated and never freed.
- Heap use analysis: show all functions that are allocating/freeing memory while the trace is running.

How To Diagnose Memory Leaks

If you suspect a memory leak, the first step is to figure out which part of the program is leaking memory. Use the `xPortGetFreeHeapSize()`, *heap_caps_get_free_size()*, or *related functions* to track memory use over the life of the application. Try to narrow the leak down to a single function or sequence of functions where free memory always decreases and never recovers.

Once you' ve identified the code which you think is leaking:

- Under `make menuconfig`, navigate to `Component settings` -> `Heap Memory Debugging` and set *CONFIG_HEAP_TRACING*.
- Call the function *heap_trace_init_standalone()* early in the program, to register a buffer which can be used to record the memory trace.
- Call the function *heap_trace_start()* to begin recording all mallocs/frees in the system. Call this immediately before the piece of code which you suspect is leaking memory.
- Call the function *heap_trace_stop()* to stop the trace once the suspect piece of code has finished executing.
- Call the function *heap_trace_dump()* to dump the results of the heap trace.

An example:

```
#include "esp_heap_trace.h"

#define NUM_RECORDS 100
static heap_trace_record_t trace_record[NUM_RECORDS]; // This buffer must be in internal␣
↪RAM

...

void app_main()
{
    ...
    ESP_ERROR_CHECK( heap_trace_init_standalone(trace_record, NUM_RECORDS) );
    ...
}

void some_function()
{
```

(下页继续)

(续上页)

```
    ESP_ERROR_CHECK( heap_trace_start(HEAP_TRACE_LEAKS) );

    do_something_you_suspect_is_leaking();

    ESP_ERROR_CHECK( heap_trace_stop() );
    heap_trace_dump();
    ...
}
```

The output from the heap trace will look something like this:

```
2 allocations trace (100 entry buffer)
32 bytes (@ 0x3ffaf214) allocated CPU 0 ccount 0x2e9b7384 caller 0x400d276d:0x400d27c1
0x400d276d: leak_some_memory at /path/to/idf/examples/get-started/blink/main/./blink.c:27

0x400d27c1: blink_task at /path/to/idf/examples/get-started/blink/main/./blink.c:52

8 bytes (@ 0x3ffaf804) allocated CPU 0 ccount 0x2e9b79c0 caller 0x400d2776:0x400d27c1
0x400d2776: leak_some_memory at /path/to/idf/examples/get-started/blink/main/./blink.c:29

0x400d27c1: blink_task at /path/to/idf/examples/get-started/blink/main/./blink.c:52

40 bytes 'leaked' in trace (2 allocations)
total allocations 2 total frees 0
```

(Above example output is using *IDF Monitor* to automatically decode PC addresses to their source files & line number.)

The first line indicates how many allocation entries are in the buffer, compared to its total size.

In `HEAP_TRACE_LEAKS` mode, for each traced memory allocation which has not already been freed a line is printed with:

- `XX bytes` is number of bytes allocated
- `@ 0x...` is the heap address returned from malloc/calloc.
- `CPU x` is the CPU (0 or 1) running when the allocation was made.
- `ccount 0x...` is the CCOUNT (CPU cycle count) register value when the allocation was mode. Is different for CPU 0 vs CPU 1.
- `caller 0x...` gives the call stack of the call to malloc()/free(), as a list of PC addresses. These can be decoded to source files and line numbers, as shown above.

The depth of the call stack recorded for each trace entry can be configured in `make menuconfig`, under `Heap`

`Memory Debugging` -> `Enable heap tracing` -> `Heap tracing stack depth`. Up to 10 stack frames can be recorded for each allocation (the default is 2). Each additional stack frame increases the memory usage of each `heap_trace_record_t` record by eight bytes.

Finally, the total number of 'leaked' bytes (bytes allocated but not freed while trace was running) is printed, and the total number of allocations this represents.

A warning will be printed if the trace buffer was not large enough to hold all the allocations which happened. If you see this warning, consider either shortening the tracing period or increasing the number of records in the trace buffer.

Heap Tracing To Find Heap Corruption

Heap tracing can also be used to help track down heap corruption. When a region in heap is corrupted, it may be from some other part of the program which allocated memory at a nearby address.

If you have some idea at what time the corruption occurred, enabling heap tracing in `HEAP_TRACE_ALL` mode allows you to record all of the functions which allocated memory, and the addresses of the allocations.

Using heap tracing in this way is very similar to memory leak detection as described above. For memory which is allocated and not freed, the output is the same. However, records will also be shown for memory which has been freed.

Performance Impact

Enabling heap tracing in menuconfig increases the code size of your program, and has a very small negative impact on performance of heap allocation/free operations even when heap tracing is not running.

When heap tracing is running, heap allocation/free operations are substantially slower than when heap tracing is stopped. Increasing the depth of stack frames recorded for each allocation (see above) will also increase this performance impact.

False-Positive Memory Leaks

Not everything printed by *heap_trace_dump()* is necessarily a memory leak. Among things which may show up here, but are not memory leaks:

- Any memory which is allocated after *heap_trace_start()* but then freed after *heap_trace_stop()* will appear in the leak dump.
- Allocations may be made by other tasks in the system. Depending on the timing of these tasks, it's quite possible this memory is freed after *heap_trace_stop()* is called.
- The first time a task uses stdio - for example, when it calls `printf()` - a lock (RTOS mutex semaphore) is allocated by the libc. This allocation lasts until the task is deleted.

- Certain uses of `printf()`, such as printing floating point numbers, will allocate some memory from the heap on demand. These allocations last until the task is deleted.
- The Bluetooth, WiFi, and TCP/IP libraries will allocate heap memory buffers to handle incoming or outgoing data. These memory buffers are usually short lived, but some may be shown in the heap leak trace if the data was received/transmitted by the lower levels of the network while the leak trace was running.
- TCP connections will continue to use some memory after they are closed, because of the `TIME_WAIT` state. After the `TIME_WAIT` period has completed, this memory will be freed.

One way to differentiate between "real" and "false positive" memory leaks is to call the suspect code multiple times while tracing is running, and look for patterns (multiple matching allocations) in the heap trace output.

API Reference - Heap Tracing

Header File

- heap/include/esp_heap_trace.h

Functions

esp_err_t **heap_trace_init_standalone**(*heap_trace_record_t* **record_buffer*, size_t *num_records*)

Initialise heap tracing in standalone mode.

This function must be called before any other heap tracing functions.

Note Standalone mode is the only mode currently supported.

To disable heap tracing and allow the buffer to be freed, stop tracing and then call heap_trace_init_standalone(NULL, 0);

Return

- ESP_ERR_NOT_SUPPORTED Project was compiled without heap tracing enabled in menuconfig.
- ESP_ERR_INVALID_STATE Heap tracing is currently in progress.
- ESP_OK Heap tracing initialised successfully.

Parameters

- `record_buffer`: Provide a buffer to use for heap trace data. Must remain valid any time heap tracing is enabled, meaning it must be allocated from internal memory not in PSRAM.
- `num_records`: Size of the heap trace buffer, as number of record structures.

esp_err_t **heap_trace_start**(*heap_trace_mode_t mode*)

Start heap tracing. All heap allocations & frees will be traced, until heap_trace_stop() is called.

Note heap_trace_init_standalone() must be called to provide a valid buffer, before this function is called.

Note Calling this function while heap tracing is running will reset the heap trace state and continue tracing.

Return

- ESP_ERR_NOT_SUPPORTED Project was compiled without heap tracing enabled in menuconfig.
- ESP_ERR_INVALID_STATE A non-zero-length buffer has not been set via heap_trace_init_standalone().
- ESP_OK Tracing is started.

Parameters

- `mode`: Mode for tracing.
  - HEAP_TRACE_ALL means all heap allocations and frees are traced.
  - HEAP_TRACE_LEAKS means only suspected memory leaks are traced. (When memory is freed, the record is removed from the trace buffer.)

esp_err_t **heap_trace_stop**(void)

Stop heap tracing.

Return

- ESP_ERR_NOT_SUPPORTED Project was compiled without heap tracing enabled in menuconfig.
- ESP_ERR_INVALID_STATE Heap tracing was not in progress.
- ESP_OK Heap tracing stopped..

esp_err_t **heap_trace_resume**(void)

Resume heap tracing which was previously stopped.

Unlike heap_trace_start(), this function does not clear the buffer of any pre-existing trace records.

The heap trace mode is the same as when heap_trace_start() was last called (or HEAP_TRACE_ALL if heap_trace_start() was never called).

Return

- ESP_ERR_NOT_SUPPORTED Project was compiled without heap tracing enabled in menuconfig.

- ESP_ERR_INVALID_STATE Heap tracing was already started.
- ESP_OK Heap tracing resumed.

size_t **heap_trace_get_count**(void)

Return number of records in the heap trace buffer.

It is safe to call this function while heap tracing is running.

esp_err_t **heap_trace_get**(size_t *index*, *heap_trace_record_t* **record*)

Return a raw record from the heap trace buffer.

Note It is safe to call this function while heap tracing is running, however in HEAP_TRACE_LEAK mode record indexing may skip entries unless heap tracing is stopped first.

Return

- ESP_ERR_NOT_SUPPORTED Project was compiled without heap tracing enabled in menuconfig.
- ESP_ERR_INVALID_STATE Heap tracing was not initialised.
- ESP_ERR_INVALID_ARG Index is out of bounds for current heap trace record count.
- ESP_OK Record returned successfully.

Parameters

- `index`: Index (zero-based) of the record to return.
- `record`: Record where the heap trace record will be copied.

void **heap_trace_dump**(void)

Dump heap trace record data to stdout.

Note It is safe to call this function while heap tracing is running, however in HEAP_TRACE_LEAK mode the dump may skip entries unless heap tracing is stopped first.

Structures

struct heap_trace_record_t

Trace record data type. Stores information about an allocated region of memory.

Public Members

uint32_t **ccount**

CCOUNT of the CPU when the allocation was made. LSB (bit value 1) is the CPU number (0 or 1).

void *address
: Address which was allocated.

size_t size
: Size of the allocation.

void *alloced_by[CONFIG_HEAP_TRACING_STACK_DEPTH]
: Call stack of the caller which allocated the memory.

void *freed_by[CONFIG_HEAP_TRACING_STACK_DEPTH]
: Call stack of the caller which freed the memory (all zero if not freed.)

Macros

CONFIG_HEAP_TRACING_STACK_DEPTH

Enumerations

enum heap_trace_mode_t
: *Values:*

  HEAP_TRACE_ALL

  HEAP_TRACE_LEAKS

3.7.5 The himem allocation API

Overview

The ESP32 can access external SPI RAM transparently, so you can use it as normal memory in your program code. However, because the address space for external memory is limited in size, only the first 4MiB can be used as such. Access to the remaining memory is still possible, however this needs to go through a bankswitching scheme controlled by the himem API.

Specifically, what is implemented by the himem API is a bankswitching scheme. Hardware-wise, the 4MiB region for external SPI RAM is mapped into the CPU address space by a MMU, which maps a configurable 32K bank/page of external SPI RAM into each of the 32K pages in the 4MiB region accessed by the CPU. For external memories that are <=4MiB, this MMU is configured to unity mapping, effectively mapping each CPU address 1-to-1 to the external SPI RAM address.

In order to use the himem API, you have to enable it in the menuconfig using `CONFIG_SPIRAM_BANKSWITCH_ENABLE`, as well as set the amount of banks reserved for this in `CONFIG_SPIRAM_BANKSWITCH_RESERVE`. This decreases the amount of external memory allocated by functions like `malloc()`, but it allows you to use the himem api to map any of the remaining memory into the reserved banks.

The himem API is more-or-less an abstraction of the bankswitching scheme: it allows you to claim one or more banks of address space (called 'regions' in the API) as well as one or more of banks of memory to map into the ranges.

Example

An example doing a simple memory test of the high memory range is available in esp-idf: system/himem

API Reference

Header File

- esp32/include/esp_himem.h

Functions

esp_err_t **esp_himem_alloc**(size_t *size*, *esp_himem_handle_t* **handle_out*)

Allocate a block in high memory.

Return - ESP_OK if succesful

- ESP_ERR_NO_MEM if out of memory
- ESP_ERR_INVALID_SIZE if size is not a multiple of 32K

Parameters

- `size`: Size of the to-be-allocated block, in bytes. Note that this needs to be a multiple of the external RAM mmu block size (32K).
- `handle_out`: Handle to be returned

esp_err_t **esp_himem_alloc_map_range**(size_t *size*, *esp_himem_rangehandle_t* **handle_out*)

Allocate a memory region to map blocks into.

This allocates a contiguous CPU memory region that can be used to map blocks of physical memory into.

Return - ESP_OK if succesful

- ESP_ERR_NO_MEM if out of memory or address space
- ESP_ERR_INVALID_SIZE if size is not a multiple of 32K

Parameters

- `size`: Size of the range to be allocated. Note this needs to be a multiple of the external RAM mmu block size (32K).

- `handle_out`: Handle to be returned

esp_err_t **esp_himem_map**(*esp_himem_handle_t handle*, *esp_himem_rangehandle_t range*, size_t *ram_offset*, size_t *range_offset*, size_t *len*, int *flags*, void **out_ptr*)

Map a block of high memory into the CPUs address space.

This effectively makes the block available for read/write operations.

Note The region to be mapped needs to have offsets and sizes that are aligned to the SPI RAM MMU block size (32K)

Return - ESP_OK if the memory could be mapped

- ESP_ERR_INVALID_ARG if offset, range or len aren't MMU-block-aligned (32K)
- ESP_ERR_INVALID_SIZE if the offsets/lengths don't fit in the allocated memory or range
- ESP_ERR_INVALID_STATE if a block in the selected ram offset/length is already mapped, or if a block in the selected range offset/length already has a mapping.

Parameters

- `handle`: Handle to the block of memory, as given by esp_himem_alloc
- `range`: Range handle to map the memory in
- `ram_offset`: Offset into the block of physical memory of the block to map
- `range_offset`: Offset into the address range where the block will be mapped
- `len`: Length of region to map
- `flags`: One of ESP_HIMEM_MAPFLAG_*
- `out_ptr`: Pointer to variable to store resulting memory pointer in

esp_err_t **esp_himem_free**(*esp_himem_handle_t handle*)

Free a block of physical memory.

This clears out the associated handle making the memory available for re-allocation again. This will only succeed if none of the memory blocks currently have a mapping.

Return - ESP_OK if the memory is succesfully freed

- ESP_ERR_INVALID_ARG if the handle still is (partially) mapped

Parameters

- `handle`: Handle to the block of memory, as given by esp_himem_alloc

esp_err_t **esp_himem_free_map_range**(*esp_himem_rangehandle_t handle*)

Free a mapping range.

This clears out the associated handle making the range available for re-allocation again. This will only succeed if none of the range blocks currently are used for a mapping.

Return - ESP_OK if the memory is succesfully freed

- ESP_ERR_INVALID_ARG if the handle still is (partially) mapped to

Parameters

- `handle`: Handle to the range block, as given by esp_himem_alloc_map_range

esp_err_t **esp_himem_unmap**(*esp_himem_rangehandle_t range*, void **ptr*, size_t *len*)

Unmap a region.

Return - ESP_OK if the memory is succesfully unmapped,

- ESP_ERR_INVALID_ARG if ptr or len are invalid.

Parameters

- `range`: Range handle
- `ptr`: Pointer returned by esp_himem_map
- `len`: Length of the block to be unmapped. Must be aligned to the SPI RAM MMU blocksize (32K)

size_t **esp_himem_get_phys_size**()

Get total amount of memory under control of himem API.

Return Amount of memory, in bytes

size_t **esp_himem_get_free_size**()

Get free amount of memory under control of himem API.

Return Amount of free memory, in bytes

size_t **esp_himem_reserved_area_size**()

Get amount of SPI memory address space needed for bankswitching.

Note This is also weakly defined in esp32/spiram.c and returns 0 there, so if no other function in this file is used, no memory is reserved.

Return Amount of reserved area, in bytes

Macros

`ESP_HIMEM_BLKSZ`

`ESP_HIMEM_MAPFLAG_RO`
: Indicates that a mapping will only be read from. Note that this is unused for now.

Type Definitions

typedef struct esp_himem_ramdata_t ***esp_himem_handle_t**

typedef struct esp_himem_rangedata_t ***esp_himem_rangehandle_t**

3.7.6 Interrupt allocation

Overview

The ESP32 has two cores, with 32 interrupts each. Each interrupt has a certain priority level, most (but not all) interrupts are connected to the interrupt mux. Because there are more interrupt sources than interrupts, sometimes it makes sense to share an interrupt in multiple drivers. The esp_intr_alloc abstraction exists to hide all these implementation details.

A driver can allocate an interrupt for a certain peripheral by calling esp_intr_alloc (or esp_intr_alloc_sintrstatus). It can use the flags passed to this function to set the type of interrupt allocated, specifying a specific level or trigger method. The interrupt allocation code will then find an applicable interrupt, use the interrupt mux to hook it up to the peripheral, and install the given interrupt handler and ISR to it.

This code has two different types of interrupts it handles differently: Shared interrupts and non-shared interrupts. The simplest of the two are non-shared interrupts: a separate interrupt is allocated per esp_intr_alloc call and this interrupt is solely used for the peripheral attached to it, with only one ISR that will get called. Shared interrupts can have multiple peripherals triggering it, with multiple ISRs being called when one of the peripherals attached signals an interrupt. Thus, ISRs that are intended for shared interrupts should check the interrupt status of the peripheral they service in order to see if any action is required.

Non-shared interrupts can be either level- or edge-triggered. Shared interrupts can only be level interrupts (because of the chance of missed interrupts when edge interrupts are used.) (The logic behind this: DevA and DevB share an int. DevB signals an int. Int line goes high. ISR handler calls code for DevA -> does nothing. ISR handler calls code for DevB, but while doing that, DevA signals an int. ISR DevB is done, clears int for DevB, exits interrupt code. Now an interrupt for DevA is still pending, but because the int line never went low (DevA kept it high even when the int for DevB was cleared) the interrupt is never serviced.)

Multicore issues

Peripherals that can generate interrupts can be divided in two types:

- External peripherals, within the ESP32 but outside the Xtensa cores themselves. Most ESP32 peripherals are of this type.

- Internal peripherals, part of the Xtensa CPU cores themselves.

Interrupt handling differs slightly between these two types of peripherals.

Internal peripheral interrupts

Each Xtensa CPU core has its own set of six internal peripherals:

- Three timer comparators
- A performance monitor
- Two software interrupts.

Internal interrupt sources are defined in esp_intr_alloc.h as `ETS_INTERNAL_*_INTR_SOURCE`.

These peripherals can only be configured from the core they are associated with. When generating an interrupt, the interrupt they generate is hard-wired to their associated core; it' s not possible to have e.g. an internal timer comparator of one core generate an interrupt on another core. That is why these sources can only be managed using a task running on that specific core. Internal interrupt sources are still allocatable using esp_intr_alloc as normal, but they cannot be shared and will always have a fixed interrupt level (namely, the one associated in hardware with the peripheral).

External Peripheral Interrupts

The remaining interrupt sources are from external peripherals. These are defined in soc/soc.h as `ETS_*_INTR_SOURCE`.

Non-internal interrupt slots in both CPU cores are wired to an interrupt multiplexer, which can be used to route any external interrupt source to any of these interrupt slots.

- Allocating an external interrupt will always allocate it on the core that does the allocation.
- Freeing an external interrupt must always happen on the same core it was allocated on.
- Disabling and enabling external interrupts from another core is allowed.
- Multiple external interrupt sources can share an interrupt slot by passing `ESP_INTR_FLAG_SHARED` as a flag to esp_intr_alloc().

Care should be taken when calling esp_intr_alloc() from a task which is not pinned to a core. During task switching, these tasks can migrate between cores. Therefore it is impossible to tell which CPU the interrupt is allocated on, which makes it difficult to free the interrupt handle and may also cause debugging difficulties. It is advised to use xTaskCreatePinnedToCore() with a specific CoreID argument to create tasks that will allocate interrupts. In the case of internal interrupt sources, this is required.

IRAM-Safe Interrupt Handlers

The `ESP_INTR_FLAG_IRAM` flag registers an interrupt handler that always runs from IRAM (and reads all its data from DRAM), and therefore does not need to be disabled during flash erase and write operations.

This is useful for interrupts which need a guaranteed minimum execution latency, as flash write and erase operations can be slow (erases can take tens or hundreds of milliseconds to complete).

It can also be useful to keep an interrupt handler in IRAM if it is called very frequently, to avoid flash cache misses.

Refer to the *SPI flash API documentation* for more details.

Multiple Handlers Sharing A Source

Several handlers can be assigned to a same source, given that all handlers are allocated using the `ESP_INTR_FLAG_SHARED` flag. They' ll be all allocated to the interrupt, which the source is attached to, and called sequentially when the source is active. The handlers can be disabled and freed individually. The source is attached to the interrupt (enabled), if one or more handlers are enabled, otherwise detached. A handler will never be called when disabled, while **its source may still be triggered** if any one of its handler enabled.

Sources attached to non-shared interrupt do not support this feature.

Though the framework support this feature, you have to use it *very carefully*. There usually exist 2 ways to stop a interrupt from being triggered: *disable the sourse* or *mask peripheral interrupt status*. IDF only handles the enabling and disabling of the source itself, leaving status and mask bits to be handled by users. **Status bits should always be masked before the handler responsible for it is disabled, or the status should be handled in other enabled interrupt properly**. You may leave some status bits unhandled if you just disable one of all the handlers without mask the status bits, which causes the interrupt being triggered infinitely, and finally a system crash.

API Reference

Header File

- esp32/include/esp_intr_alloc.h

Functions

esp_err_t **esp_intr_mark_shared**(int *intno*, int *cpu*, bool *is_in_iram*)

Mark an interrupt as a shared interrupt.

This will mark a certain interrupt on the specified CPU as an interrupt that can be used to hook shared interrupt handlers to.

Return ESP_ERR_INVALID_ARG if cpu or intno is invalid ESP_OK otherwise

Parameters

- `intno`: The number of the interrupt (0-31)
- `cpu`: CPU on which the interrupt should be marked as shared (0 or 1)
- `is_in_iram`: Shared interrupt is for handlers that reside in IRAM and the int can be left enabled while the flash cache is disabled.

esp_err_t **esp_intr_reserve**(int *intno*, int *cpu*)

Reserve an interrupt to be used outside of this framework.

This will mark a certain interrupt on the specified CPU as reserved, not to be allocated for any reason.

Return ESP_ERR_INVALID_ARG if cpu or intno is invalid ESP_OK otherwise

Parameters

- `intno`: The number of the interrupt (0-31)
- `cpu`: CPU on which the interrupt should be marked as shared (0 or 1)

esp_err_t **esp_intr_alloc**(int *source*, int *flags*, *intr_handler_t* *handler*, void **arg*, *intr_handle_t* **ret_handle*)

Allocate an interrupt with the given parameters.

This finds an interrupt that matches the restrictions as given in the flags parameter, maps the given interrupt source to it and hooks up the given interrupt handler (with optional argument) as well. If needed, it can return a handle for the interrupt as well.

The interrupt will always be allocated on the core that runs this function.

If ESP_INTR_FLAG_IRAM flag is used, and handler address is not in IRAM or RTC_FAST_MEM, then ESP_ERR_INVALID_ARG is returned.

Return ESP_ERR_INVALID_ARG if the combination of arguments is invalid. ESP_ERR_NOT_FOUND No free interrupt found with the specified flags ESP_OK otherwise

Parameters

- `source`: The interrupt source. One of the ETS_*_INTR_SOURCE interrupt mux sources, as defined in soc/soc.h, or one of the internal ETS_INTERNAL_*_INTR_SOURCE sources as defined in this header.
- `flags`: An ORred mask of the ESP_INTR_FLAG_* defines. These restrict the choice of interrupts that this routine can choose from. If this value is 0, it will default to allocating a non-shared interrupt of level 1, 2 or 3. If this is ESP_INTR_FLAG_SHARED, it will

allocate a shared interrupt of level 1. Setting ESP_INTR_FLAG_INTRDISABLED will return from this function with the interrupt disabled.

- `handler`: The interrupt handler. Must be NULL when an interrupt of level >3 is requested, because these types of interrupts aren't C-callable.
- `arg`: Optional argument for passed to the interrupt handler
- `ret_handle`: Pointer to an intr_handle_t to store a handle that can later be used to request details or free the interrupt. Can be NULL if no handle is required.

esp_err_t **esp_intr_alloc_intrstatus**(int *source*, int *flags*, uint32_t *intrstatusreg*, uint32_t *intrstatusmask*, *intr_handler_t* *handler*, void *arg, *intr_handle_t* *ret_handle)

Allocate an interrupt with the given parameters.

This essentially does the same as esp_intr_alloc, but allows specifying a register and mask combo. For shared interrupts, the handler is only called if a read from the specified register, ANDed with the mask, returns non-zero. By passing an interrupt status register address and a fitting mask, this can be used to accelerate interrupt handling in the case a shared interrupt is triggered; by checking the interrupt statuses first, the code can decide which ISRs can be skipped

Return ESP_ERR_INVALID_ARG if the combination of arguments is invalid. ESP_ERR_NOT_FOUND No free interrupt found with the specified flags ESP_OK otherwise

Parameters

- `source`: The interrupt source. One of the ETS_*_INTR_SOURCE interrupt mux sources, as defined in soc/soc.h, or one of the internal ETS_INTERNAL_*_INTR_SOURCE sources as defined in this header.
- `flags`: An ORred mask of the ESP_INTR_FLAG_* defines. These restrict the choice of interrupts that this routine can choose from. If this value is 0, it will default to allocating a non-shared interrupt of level 1, 2 or 3. If this is ESP_INTR_FLAG_SHARED, it will allocate a shared interrupt of level 1. Setting ESP_INTR_FLAG_INTRDISABLED will return from this function with the interrupt disabled.
- `intrstatusreg`: The address of an interrupt status register
- `intrstatusmask`: A mask. If a read of address intrstatusreg has any of the bits that are 1 in the mask set, the ISR will be called. If not, it will be skipped.
- `handler`: The interrupt handler. Must be NULL when an interrupt of level >3 is requested, because these types of interrupts aren't C-callable.
- `arg`: Optional argument for passed to the interrupt handler
- `ret_handle`: Pointer to an intr_handle_t to store a handle that can later be used to request details or free the interrupt. Can be NULL if no handle is required.

esp_err_t **esp_intr_free**(*intr_handle_t handle*)

Disable and free an interrupt.

Use an interrupt handle to disable the interrupt and release the resources associated with it. If the current core is not the core that registered this interrupt, this routine will be assigned to the core that allocated this interrupt, blocking and waiting until the resource is successfully released.

Note When the handler shares its source with other handlers, the interrupt status bits it's responsible for should be managed properly before freeing it. see `esp_intr_disable` for more details. Please do not call this function in `esp_ipc_call_blocking`.

Return ESP_ERR_INVALID_ARG the handle is NULL ESP_FAIL failed to release this handle ESP_OK otherwise

Parameters

- `handle`: The handle, as obtained by esp_intr_alloc or esp_intr_alloc_intrstatus

int **esp_intr_get_cpu**(*intr_handle_t handle*)

Get CPU number an interrupt is tied to.

Return The core number where the interrupt is allocated

Parameters

- `handle`: The handle, as obtained by esp_intr_alloc or esp_intr_alloc_intrstatus

int **esp_intr_get_intno**(*intr_handle_t handle*)

Get the allocated interrupt for a certain handle.

Return The interrupt number

Parameters

- `handle`: The handle, as obtained by esp_intr_alloc or esp_intr_alloc_intrstatus

esp_err_t **esp_intr_disable**(*intr_handle_t handle*)

Disable the interrupt associated with the handle.

Note

1. For local interrupts (ESP_INTERNAL_* sources), this function has to be called on the CPU the interrupt is allocated on. Other interrupts have no such restriction.
2. When several handlers sharing a same interrupt source, interrupt status bits, which are handled in the handler to be disabled, should be masked before the disabling, or handled in other enabled interrupts properly. Miss of interrupt status handling will cause infinite interrupt calls and finally system crash.

Return ESP_ERR_INVALID_ARG if the combination of arguments is invalid. ESP_OK otherwise

Parameters

- `handle`: The handle, as obtained by esp_intr_alloc or esp_intr_alloc_intrstatus

esp_err_t **esp_intr_enable**(*intr_handle_t handle*)

Enable the interrupt associated with the handle.

Note For local interrupts (ESP_INTERNAL_* sources), this function has to be called on the CPU the interrupt is allocated on. Other interrupts have no such restriction.

Return ESP_ERR_INVALID_ARG if the combination of arguments is invalid. ESP_OK otherwise

Parameters

- `handle`: The handle, as obtained by esp_intr_alloc or esp_intr_alloc_intrstatus

esp_err_t **esp_intr_set_in_iram**(*intr_handle_t handle*, bool *is_in_iram*)

Set the "in IRAM" status of the handler.

Note Does not work on shared interrupts.

Return ESP_ERR_INVALID_ARG if the combination of arguments is invalid. ESP_OK otherwise

Parameters

- `handle`: The handle, as obtained by esp_intr_alloc or esp_intr_alloc_intrstatus
- `is_in_iram`: Whether the handler associated with this handle resides in IRAM. Handlers residing in IRAM can be called when cache is disabled.

void **esp_intr_noniram_disable**()

Disable interrupts that aren't specifically marked as running from IRAM.

void **esp_intr_noniram_enable**()

Re-enable interrupts disabled by esp_intr_noniram_disable.

Macros

ESP_INTR_FLAG_LEVEL1

Interrupt allocation flags.

These flags can be used to specify which interrupt qualities the code calling esp_intr_alloc* needs.Accept a Level 1 interrupt vector (lowest priority)

ESP_INTR_FLAG_LEVEL2

Accept a Level 2 interrupt vector.

ESP_INTR_FLAG_LEVEL3

Accept a Level 3 interrupt vector.

ESP_INTR_FLAG_LEVEL4
: Accept a Level 4 interrupt vector.

ESP_INTR_FLAG_LEVEL5
: Accept a Level 5 interrupt vector.

ESP_INTR_FLAG_LEVEL6
: Accept a Level 6 interrupt vector.

ESP_INTR_FLAG_NMI
: Accept a Level 7 interrupt vector (highest priority)

ESP_INTR_FLAG_SHARED
: Interrupt can be shared between ISRs.

ESP_INTR_FLAG_EDGE
: Edge-triggered interrupt.

ESP_INTR_FLAG_IRAM
: ISR can be called if cache is disabled.

ESP_INTR_FLAG_INTRDISABLED
: Return with this interrupt disabled.

ESP_INTR_FLAG_LOWMED
: Low and medium prio interrupts. These can be handled in C.

ESP_INTR_FLAG_HIGH
: High level interrupts. Need to be handled in assembly.

ESP_INTR_FLAG_LEVELMASK
: Mask for all level flags.

ETS_INTERNAL_TIMER0_INTR_SOURCE
: Xtensa timer 0 interrupt source.

  The esp_intr_alloc* functions can allocate an int for all ETS_*_INTR_SOURCE interrupt sources that are routed through the interrupt mux. Apart from these sources, each core also has some internal sources that do not pass through the interrupt mux. To allocate an interrupt for these sources, pass these pseudo-sources to the functions.

ETS_INTERNAL_TIMER1_INTR_SOURCE
: Xtensa timer 1 interrupt source.

ETS_INTERNAL_TIMER2_INTR_SOURCE
: Xtensa timer 2 interrupt source.

ETS_INTERNAL_SW0_INTR_SOURCE
: Software int source 1.

`ETS_INTERNAL_SW1_INTR_SOURCE`
Software int source 2.

`ETS_INTERNAL_PROFILING_INTR_SOURCE`
Int source for profiling.

`ETS_INTERNAL_INTR_SOURCE_OFF`

Type Definitions

`typedef` void (*`intr_handler_t`)(void *arg)

`typedef struct` *intr_handle_data_t* `intr_handle_data_t`

`typedef` *intr_handle_data_t* *`intr_handle_t`

3.7.7 Watchdogs

Overview

The ESP-IDF has support for two types of watchdogs: The Interrupt Watchdog Timer and the Task Watchdog Timer (TWDT). The Interrupt Watchdog Timer and the TWDT can both be enabled using `make menuconfig`, however the TWDT can also be enabled during runtime. The Interrupt Watchdog is responsible for detecting instances where FreeRTOS task switching is blocked for a prolonged period of time. The TWDT is responsible for detecting instances of tasks running without yielding for a prolonged period.

Interrupt watchdog

The interrupt watchdog makes sure the FreeRTOS task switching interrupt isn't blocked for a long time. This is bad because no other tasks, including potentially important ones like the WiFi task and the idle task, can't get any CPU runtime. A blocked task switching interrupt can happen because a program runs into an infinite loop with interrupts disabled or hangs in an interrupt.

The default action of the interrupt watchdog is to invoke the panic handler. causing a register dump and an opportunity for the programmer to find out, using either OpenOCD or gdbstub, what bit of code is stuck with interrupts disabled. Depending on the configuration of the panic handler, it can also blindly reset the CPU, which may be preferred in a production environment.

The interrupt watchdog is built around the hardware watchdog in timer group 1. If this watchdog for some reason cannot execute the NMI handler that invokes the panic handler (e.g. because IRAM is overwritten by garbage), it will hard-reset the SOC.

Task Watchdog Timer

The Task Watchdog Timer (TWDT) is responsible for detecting instances of tasks running for a prolonged period of time without yielding. This is a symptom of CPU starvation and is usually caused by a higher priority task looping without yielding to a lower-priority task thus starving the lower priority task from CPU time. This can be an indicator of poorly written code that spinloops on a peripheral, or a task that is stuck in an infinite loop.

By default the TWDT will watch the Idle Tasks of each CPU, however any task can elect to be watched by the TWDT. Each watched task must 'reset' the TWDT periodically to indicate that they have been allocated CPU time. If a task does not reset within the TWDT timeout period, a warning will be printed with information about which tasks failed to reset the TWDT in time and which tasks are currently running on the ESP32 CPUs. And also there is a possibility to redefine the function *esp_task_wdt_isr_user_handler* in the user code to receive this event.

The TWDT is built around the Hardware Watchdog Timer in Timer Group 0. The TWDT can be initialized by calling *esp_task_wdt_init()* which will configure the hardware timer. A task can then subscribe to the TWDT using *esp_task_wdt_add()* in order to be watched. Each subscribed task must periodically call *esp_task_wdt_reset()* to reset the TWDT. Failure by any subscribed tasks to periodically call *esp_task_wdt_reset()* indicates that one or more tasks have been starved of CPU time or are stuck in a loop somewhere.

A watched task can be unsubscribed from the TWDT using *esp_task_wdt_delete()*. A task that has been unsubscribed should no longer call *esp_task_wdt_reset()*. Once all tasks have unsubscribed form the TWDT, the TWDT can be deinitialized by calling *esp_task_wdt_deinit()*.

By default *CONFIG_TASK_WDT* in `make menuconfig` will be enabled causing the TWDT to be initialized automatically during startup. Likewise *CONFIG_TASK_WDT_CHECK_IDLE_TASK_CPU0* and *CONFIG_TASK_WDT_CHECK_IDLE_TASK_CPU1* are also enabled by default causing the two Idle Tasks to be subscribed to the TWDT during startup.

JTAG and watchdogs

While debugging using OpenOCD, the CPUs will be halted every time a breakpoint is reached. However if the watchdog timers continue to run when a breakpoint is encountered, they will eventually trigger a reset making it very difficult to debug code. Therefore OpenOCD will disable the hardware timers of both the interrupt and task watchdogs at every breakpoint. Moreover, OpenOCD will not reenable them upon leaving the breakpoint. This means that interrupt watchdog and task watchdog functionality will essentially be disabled. No warnings or panics from either watchdogs will be generated when the ESP32 is connected to OpenOCD via JTAG.

Interrupt Watchdog API Reference

Header File

- esp32/include/esp_int_wdt.h

Functions

void **esp_int_wdt_init**()

Initialize the non-CPU-specific parts of interrupt watchdog. This is called in the init code if the interrupt watchdog is enabled in menuconfig.

Task Watchdog API Reference

A full example using the Task Watchdog is available in esp-idf: system/task_watchdog

Header File

- esp32/include/esp_task_wdt.h

Functions

esp_err_t **esp_task_wdt_init**(uint32_t *timeout*, bool *panic*)

Initialize the Task Watchdog Timer (TWDT)

This function configures and initializes the TWDT. If the TWDT is already initialized when this function is called, this function will update the TWDT' s timeout period and panic configurations instead. After initializing the TWDT, any task can elect to be watched by the TWDT by subscribing to it using esp_task_wdt_add().

Return

- ESP_OK: Initialization was successful
- ESP_ERR_NO_MEM: Initialization failed due to lack of memory

Note esp_task_wdt_init() must only be called after the scheduler started

Parameters

- `timeout`: Timeout period of TWDT in seconds
- `panic`: Flag that controls whether the panic handler will be executed when the TWDT times out

esp_err_t **esp_task_wdt_deinit**()

Deinitialize the Task Watchdog Timer (TWDT)

This function will deinitialize the TWDT. Calling this function whilst tasks are still subscribed to the TWDT, or when the TWDT is already deinitialized, will result in an error code being returned.

Return

- ESP_OK: TWDT successfully deinitialized
- ESP_ERR_INVALID_STATE: Error, tasks are still subscribed to the TWDT
- ESP_ERR_NOT_FOUND: Error, TWDT has already been deinitialized

esp_err_t **esp_task_wdt_add**(*TaskHandle_t handle*)

Subscribe a task to the Task Watchdog Timer (TWDT)

This function subscribes a task to the TWDT. Each subscribed task must periodically call esp_task_wdt_reset() to prevent the TWDT from elapsing its timeout period. Failure to do so will result in a TWDT timeout. If the task being subscribed is one of the Idle Tasks, this function will automatically enable esp_task_wdt_reset() to called from the Idle Hook of the Idle Task. Calling this function whilst the TWDT is uninitialized or attempting to subscribe an already subscribed task will result in an error code being returned.

Return

- ESP_OK: Successfully subscribed the task to the TWDT
- ESP_ERR_INVALID_ARG: Error, the task is already subscribed
- ESP_ERR_NO_MEM: Error, could not subscribe the task due to lack of memory
- ESP_ERR_INVALID_STATE: Error, the TWDT has not been initialized yet

Parameters

- **handle**: Handle of the task. Input NULL to subscribe the current running task to the TWDT

esp_err_t **esp_task_wdt_reset**()

Reset the Task Watchdog Timer (TWDT) on behalf of the currently running task.

This function will reset the TWDT on behalf of the currently running task. Each subscribed task must periodically call this function to prevent the TWDT from timing out. If one or more subscribed tasks fail to reset the TWDT on their own behalf, a TWDT timeout will occur. If the IDLE tasks have been subscribed to the TWDT, they will automatically call this function from their idle hooks. Calling this function from a task that has not subscribed to the TWDT, or when the TWDT is uninitialized will result in an error code being returned.

Return

- ESP_OK: Successfully reset the TWDT on behalf of the currently running task
- ESP_ERR_NOT_FOUND: Error, the current running task has not subscribed to the TWDT

- ESP_ERR_INVALID_STATE: Error, the TWDT has not been initialized yet

esp_err_t **esp_task_wdt_delete**(*TaskHandle_t handle*)

Unsubscribes a task from the Task Watchdog Timer (TWDT)

This function will unsubscribe a task from the TWDT. After being unsubscribed, the task should no longer call esp_task_wdt_reset(). If the task is an IDLE task, this function will automatically disable the calling of esp_task_wdt_reset() from the Idle Hook. Calling this function whilst the TWDT is uninitialized or attempting to unsubscribe an already unsubscribed task from the TWDT will result in an error code being returned.

Return

- ESP_OK: Successfully unsubscribed the task from the TWDT
- ESP_ERR_INVALID_ARG: Error, the task is already unsubscribed
- ESP_ERR_INVALID_STATE: Error, the TWDT has not been initialized yet

Parameters

- **handle**: Handle of the task. Input NULL to unsubscribe the current running task.

esp_err_t **esp_task_wdt_status**(*TaskHandle_t handle*)

Query whether a task is subscribed to the Task Watchdog Timer (TWDT)

This function will query whether a task is currently subscribed to the TWDT, or whether the TWDT is initialized.

Return :

- ESP_OK: The task is currently subscribed to the TWDT
- ESP_ERR_NOT_FOUND: The task is currently not subscribed to the TWDT
- ESP_ERR_INVALID_STATE: The TWDT is not initialized, therefore no tasks can be subscribed

Parameters

- **handle**: Handle of the task. Input NULL to query the current running task.

void **esp_task_wdt_feed**()

Reset the TWDT on behalf of the current running task, or subscribe the TWDT to if it has not done so already.

This function is similar to esp_task_wdt_reset() and will reset the TWDT on behalf of the current running task. However if this task has not subscribed to the TWDT, this function will automatically subscribe the task. Therefore, an unsubscribed task will subscribe to the TWDT on its first call to this function, then proceed to reset the TWDT on subsequent calls of this function.

Warning This function is deprecated, use esp_task_wdt_add() and esp_task_wdt_reset() instead

3.7.8 eFuse Manager

Introduction

The eFuse Manager library is designed to structure access to eFuse bits and make using these easy. This library operates eFuse bits by a structure name wich assigned in eFuse table. This sections introduces some concepts used by eFuse Manager.

Hardware description

The ESP32 has a number of eFuses which can store system and user parameters. Each eFuse is a one-bit field which can be programmed to 1 after which it cannot be reverted back to 0. Some of system parameters are using these eFuse bits directly by hardware modules and have special place (for example EFUSE_BLK0). For more details see ESP32 Technical Reference Manual in part 20 eFuse controller. Some eFuse bits are available for user applications.

ESP32 has 4 eFuse blocks each of the size of 256 bits (not all bits are available):

- EFUSE_BLK0 is used entirely for system purposes;
- EFUSE_BLK1 is used for flash encrypt key. If not using that Flash Encryption feature, they can be used for another purpose;
- EFUSE_BLK2 is used for security boot key. If not using that Secure Boot feature, they can be used for another purpose;
- EFUSE_BLK3 can be partially reserved for the custom MAC address, or used entirely for user application. Note that some bits are already used in IDF.

Each block is divided into 8 32-bits registers.

eFuse Manager component

The component has API functions for reading and writing fields. Access to the fields is carried out through the structures that describe the location of the eFuse bits in the blocks. The component provides the ability to form fields of any length and from any number of individual bits. The description of the fields is made in a CSV file in a table form. To generate from a tabular form (CSV file) in the C-source uses the tool *efuse_table_gen.py*. The tool checks the CSV file for uniqueness of field names and bit intersection, in case of using a *custom* file from the user' s project directory, the utility will check with the *common* CSV file.

CSV files:

- common (*esp_efuse_table.csv*) - contains eFuse fields which are used inside the IDF. C-source generation should be done manually when changing this file (run command 'make efuse_common_table' or *idf.py efuse_common_table*). Note that changes in this file can lead to incorrect operation.
- custom - (optional and can be enabled by `CONFIG_EFUSE_CUSTOM_TABLE`) contains eFuse fields that are used by the user in their application. C-source generation should be done manually when changing this file (run command 'make efuse_custom_table' or *idf.py efuse_custom_table*).

Description CSV file

The CSV file contains a description of the eFuse fields. In the simple case, one field has one line of description. Table header:

```
# field_name,  efuse_block(EFUSE_BLK0..EFUSE_BLK3), bit_start(0..255),  bit_count(1..
↪256),              comment
```

Individual params in CSV file the following meanings:

field_name Name of field. The prefix *ESP_EFUSE_* will be added to the name, and this field name will be available in the code. This name will be used to access the fields. The name must be unique for all fields. If the line has an empty name, then this line is combined with the previous field. This allows you to set an arbitrary order of bits in the field, and expand the field as well (see `MAC_FACTORY` field in the common table).

efuse_block Block number. It determines where the eFuse bits will be placed for this field. Available EFUSE_BLK0..EFUSE_BLK3.

bit_start Start bit number (0..255). The bit_start field can be omitted. In this case, it will be set to bit_start + bit_count from the previous record, if it has the same efuse_block. Otherwise (if efuse_block is different, or this is the first entry), an error will be generated.

bit_count The number of bits to use in this field (1..-). This parameter can not be omitted. This field also may be `MAX_BLK_LEN` in this case, the field length will have the maximum block length, taking into account the coding scheme (applicable for `ESP_EFUSE_SECURE_BOOT_KEY` and `ESP_EFUSE_ENCRYPT_FLASH_KEY` fields). The value `MAX_BLK_LEN` depends on `CONFIG_EFUSE_MAX_BLK_LEN`, will be replaced with "None" - 256, "3/4" - 192, "REPEAT" - 128.

comment This param is using for comment field, it also move to C-header file. The comment field can be omitted.

If a non-sequential bit order is required to describe a field, then the field description in the following lines should be continued without specifying a name, this will indicate that it belongs to one field. For example two fields MAC_FACTORY and MAC_FACTORY_CRC:

```
# Factory MAC address #
#######################
MAC_FACTORY,            EFUSE_BLK0,    72,    8,    Factory MAC addr [0]
,                       EFUSE_BLK0,    64,    8,    Factory MAC addr [1]
,                       EFUSE_BLK0,    56,    8,    Factory MAC addr [2]
,                       EFUSE_BLK0,    48,    8,    Factory MAC addr [3]
,                       EFUSE_BLK0,    40,    8,    Factory MAC addr [4]
,                       EFUSE_BLK0,    32,    8,    Factory MAC addr [5]
MAC_FACTORY_CRC,        EFUSE_BLK0,    80,    8,    CRC8 for factory MAC address
```

This field will available in code as ESP_EFUSE_MAC_FACTORY and ESP_EFUSE_MAC_FACTORY_CRC.

efuse_table_gen.py tool

The tool is designed to generate C-source files from CSV file and validate fields. First of all, the check is carried out on the uniqueness of the names and overlaps of the field bits. If an additional *custom* file is used, it will be checked with the existing *common* file (esp_efuse_table.csv). In case of errors, a message will be displayed and the string that caused the error. C-source files contain structures of type *esp_efuse_desc_t*.

To generate a *common* files, use the following command 'make efuse_common_table' or *idf.py efuse_common_table* or:

```
cd $IDF_PATH/components/efuse/
./efuse_table_gen.py esp32/esp_efuse_table.csv
```

After generation in the folder *esp32* create:

- *esp_efuse_table.c* file.
- In *include* folder *esp_efuse_table.c* file.

To generate a *custom* files, use the following command 'make efuse_custom_table' or *idf.py efuse_custom_table* or:

```
cd $IDF_PATH/components/efuse/
./efuse_table_gen.py esp32/esp_efuse_table.csv PROJECT_PATH/main/esp_efuse_custom_table.
↪csv
```

After generation in the folder PROJECT_PATH/main create:

- *esp_efuse_custom_table.c* file.
- In *include* folder *esp_efuse_custom_table.c* file.

To use the generated fields, you need to include two files:

```
#include "esp_efuse.h"
#include "esp_efuse_table.h" or "esp_efuse_custom_table.h"
```

Support coding scheme

eFuse have three coding schemes:

- `None` (value 0).
- `3/4` (value 1).
- `Repeat` (value 2).

The coding scheme affects only EFUSE_BLK1, EFUSE_BLK2 and EFUSE_BLK3 blocks. EUSE_BLK0 block always has a coding scheme `None`. Coding changes the number of bits that can be written into a block, the block length is constant 256, some of these bits are used for encoding and are not used.

When using a coding scheme, the length of the payload that can be written is limited (for more details `20.3.1.3 System Parameter coding_scheme`):

- None 256 bits.
- 3/4 192 bits.
- Repeat 128 bits.

You can find out the coding scheme of your chip:

- run a `espefuse.py -p COM4 summary` command.
- from `esptool` utility logs (during flashing).
- calling the function in the code *esp_efuse_get_coding_scheme()* for the EFUSE_BLK3 block.

eFuse tables must always comply with the coding scheme in the chip. There is an `EFUSE_CODE_SCHEME_SELECTOR` option to select the coding type for tables in a Kconfig. When generating source files, if your tables do not follow the coding scheme, an error message will be displayed. Adjust the length or offset fields. If your program was compiled with `None` encoding and `3/4` is used in the chip, then the `ESP_ERR_CODING` error may occur when calling the eFuse API (the field is outside the block boundaries). If the field matches the new block boundaries, then the API will work without errors.

Also, 3/4 coding scheme imposes restrictions on writing bits belonging to one coding unit. The whole block with a length of 256 bits is divided into 4 coding units, and in each coding unit there are 6 bytes of useful data and 2 service bytes. These 2 service bytes contain the checksum of the previous 6 data bytes.

It turns out that only one field can be written into one coding unit. Repeated rewriting in one coding unit is prohibited. But if the record was made in advance or through a *esp_efuse_write_block()* function, then reading the fields belonging to one coding unit is possible.

After changing the coding scheme, run `efuse_common_table` and `efuse_custom_table` commands to check the tables of the new coding scheme.

eFuse API

Access to the fields is via a pointer to the description structure. API functions have some basic operation:

- *esp_efuse_read_field_blob()* - returns an array of read eFuse bits.
- *esp_efuse_read_field_cnt()* - returns the number of bits programmed as "1".
- *esp_efuse_write_field_blob()* - writes an array.
- *esp_efuse_write_field_cnt()* - writes a required count of bits as "1".
- *esp_efuse_get_field_size()* - returns the number of bits by the field name.
- *esp_efuse_read_reg()* - returns value of eFuse register.
- *esp_efuse_write_reg()* - writes value to eFuse register.
- *esp_efuse_get_coding_scheme()* - returns eFuse coding scheme for blocks.
- *esp_efuse_read_block()* - reads key to eFuse block starting at the offset and the required size.
- *esp_efuse_write_block()* - writes key to eFuse block starting at the offset and the required size.

For frequently used fields, special functions are made, like this *esp_efuse_get_chip_ver()*, *esp_efuse_get_pkg_ver()*.

How add a new field

1. Find a free bits for field. Show *esp_efuse_table.csv* file or run `make show_efuse_table` or `idf.py show_efuse_table` or the next command:

```
$ ./efuse_table_gen.py esp32/esp_efuse_table.csv --info
eFuse coding scheme: NONE
#       field_name                      efuse_block     bit_start       bit_count
1       WR_DIS_FLASH_CRYPT_CNT          EFUSE_BLK0          2               1
2       WR_DIS_BLK1                     EFUSE_BLK0          7               1
3       WR_DIS_BLK2                     EFUSE_BLK0          8               1
4       WR_DIS_BLK3                     EFUSE_BLK0          9               1
5       RD_DIS_BLK1                     EFUSE_BLK0          16              1
6       RD_DIS_BLK2                     EFUSE_BLK0          17              1
7       RD_DIS_BLK3                     EFUSE_BLK0          18              1
8       FLASH_CRYPT_CNT                 EFUSE_BLK0          20              7
9       MAC_FACTORY                     EFUSE_BLK0          32              8
10      MAC_FACTORY                     EFUSE_BLK0          40              8
```

(下页继续)

(续上页)

```
11      MAC_FACTORY                 EFUSE_BLK0          48                8
12      MAC_FACTORY                 EFUSE_BLK0          56                8
13      MAC_FACTORY                 EFUSE_BLK0          64                8
14      MAC_FACTORY                 EFUSE_BLK0          72                8
15      MAC_FACTORY_CRC             EFUSE_BLK0          80                8
16      CHIP_VER_DIS_APP_CPU        EFUSE_BLK0          96                1
17      CHIP_VER_DIS_BT             EFUSE_BLK0          97                1
18      CHIP_VER_PKG                EFUSE_BLK0          105               3
19      CHIP_CPU_FREQ_LOW           EFUSE_BLK0          108               1
20      CHIP_CPU_FREQ_RATED         EFUSE_BLK0          109               1
21      CHIP_VER_REV1               EFUSE_BLK0          111               1
22      ADC_VREF_AND_SDIO_DREF      EFUSE_BLK0          136               6
23      XPD_SDIO_REG                EFUSE_BLK0          142               1
24      SDIO_TIEH                   EFUSE_BLK0          143               1
25      SDIO_FORCE                  EFUSE_BLK0          144               1
26      ENCRYPT_CONFIG              EFUSE_BLK0          188               4
27      CONSOLE_DEBUG_DISABLE       EFUSE_BLK0          194               1
28      ABS_DONE_0                  EFUSE_BLK0          196               1
29      DISABLE_JTAG                EFUSE_BLK0          198               1
30      DISABLE_DL_ENCRYPT          EFUSE_BLK0          199               1
31      DISABLE_DL_DECRYPT          EFUSE_BLK0          200               1
32      DISABLE_DL_CACHE            EFUSE_BLK0          201               1
33      ENCRYPT_FLASH_KEY           EFUSE_BLK1          0                 256
34      SECURE_BOOT_KEY             EFUSE_BLK2          0                 256
35      MAC_CUSTOM_CRC              EFUSE_BLK3          0                 8
36      MAC_CUSTOM                  EFUSE_BLK3          8                 48
37      ADC1_TP_LOW                 EFUSE_BLK3          96                7
38      ADC1_TP_HIGH                EFUSE_BLK3          103               9
39      ADC2_TP_LOW                 EFUSE_BLK3          112               7
40      ADC2_TP_HIGH                EFUSE_BLK3          119               9
41      SECURE_VERSION              EFUSE_BLK3          128               32
42      MAC_CUSTOM_VER              EFUSE_BLK3          184               8

Used bits in eFuse table:
EFUSE_BLK0
[2 2] [7 9] [16 18] [20 27] [32 87] [96 97] [105 109] [111 111] [136 144] [188 191] [194␣
↪194] [196 196] [198 201]

EFUSE_BLK1
[0 255]
```

(下页继续)

(续上页)

```
EFUSE_BLK2
[0 255]

EFUSE_BLK3
[0 55] [96 159] [184 191]

Note: Not printed ranges are free for using. (bits in EFUSE_BLK0 are reserved for␣
↪Espressif)

Parsing eFuse CSV input file $IDF_PATH/components/efuse/esp32/esp_efuse_table.csv ...
Verifying eFuse table...
```

The number of bits not included in square brackets is free (bits in EFUSE_BLK0 are reserved for Espressif). All fields are checked for overlapping.

2. Fill a line for field: field_name, efuse_block, bit_start, bit_count, comment.
3. Run a `show_efuse_table` command to check eFuse table. To generate source files run `efuse_common_table` or `efuse_custom_table` command.

Debug eFuse & Unit tests

Virtual eFuses

The Kconfig option `CONFIG_EFUSE_VIRTUAL` will virtualize eFuse values inside the eFuse Manager, so writes are emulated and no eFuse values are permanently changed. This can be useful for debugging app and unit tests.

espefuse.py

esptool includes a useful tool for reading/writing ESP32 eFuse bits - espefuse.py.

```
espefuse.py -p COM4 summary

espefuse.py v2.3.1
Connecting........_
Security fuses:
FLASH_CRYPT_CNT         Flash encryption mode counter                    = 0 R/W (0x0)
FLASH_CRYPT_CONFIG      Flash encryption config (key tweak bits)         = 0 R/W (0x0)
CONSOLE_DEBUG_DISABLE   Disable ROM BASIC interpreter fallback           = 1 R/W (0x1)
```

(下页继续)

(续上页)

```
ABS_DONE_0              secure boot enabled for bootloader                  = 0 R/W (0x0)
ABS_DONE_1              secure boot abstract 1 locked                       = 0 R/W (0x0)
JTAG_DISABLE            Disable JTAG                                        = 0 R/W (0x0)
DISABLE_DL_ENCRYPT      Disable flash encryption in UART bootloader         = 0 R/W (0x0)
DISABLE_DL_DECRYPT      Disable flash decryption in UART bootloader         = 0 R/W (0x0)
DISABLE_DL_CACHE        Disable flash cache in UART bootloader              = 0 R/W (0x0)
BLK1                    Flash encryption key
  = 00 00 00 00 00 00 00 00 00 00 00 00 00 00 00 00 00 00 00 00 00 00 00 00 00 00 00 00␣
↪00 00 00 00 R/W
BLK2                    Secure boot key
  = 00 00 00 00 00 00 00 00 00 00 00 00 00 00 00 00 00 00 00 00 00 00 00 00 00 00 00 00␣
↪00 00 00 00 R/W
BLK3                    Variable Block 3
  = 00 00 00 00 00 00 00 00 00 00 00 00 00 00 00 00 fa 87 02 91 00 00 00 00 00 00 00 00␣
↪00 00 00 00 R/W

Efuse fuses:
WR_DIS                  Efuse write disable mask                            = 0 R/W (0x0)
RD_DIS                  Efuse read disablemask                              = 0 R/W (0x0)
CODING_SCHEME           Efuse variable block length scheme                  = 1 R/W (0x1)␣
↪(3/4)
KEY_STATUS              Usage of efuse block 3 (reserved)                   = 0 R/W (0x0)

Config fuses:
XPD_SDIO_FORCE          Ignore MTDI pin (GPIO12) for VDD_SDIO on reset      = 0 R/W (0x0)
XPD_SDIO_REG            If XPD_SDIO_FORCE, enable VDD_SDIO reg on reset     = 0 R/W (0x0)
XPD_SDIO_TIEH           If XPD_SDIO_FORCE & XPD_SDIO_REG, 1=3.3V 0=1.8V     = 0 R/W (0x0)
SPI_PAD_CONFIG_CLK      Override SD_CLK pad (GPIO6/SPICLK)                  = 0 R/W (0x0)
SPI_PAD_CONFIG_Q        Override SD_DATA_0 pad (GPIO7/SPIQ)                 = 0 R/W (0x0)
SPI_PAD_CONFIG_D        Override SD_DATA_1 pad (GPIO8/SPID)                 = 0 R/W (0x0)
SPI_PAD_CONFIG_HD       Override SD_DATA_2 pad (GPIO9/SPIHD)                = 0 R/W (0x0)
SPI_PAD_CONFIG_CS0      Override SD_CMD pad (GPIO11/SPICS0)                 = 0 R/W (0x0)
DISABLE_SDIO_HOST       Disable SDIO host                                   = 0 R/W (0x0)

Identity fuses:
MAC                     MAC Address
  = 84:0d:8e:18:8e:44 (CRC ad OK) R/W
CHIP_VER_REV1           Silicon Revision 1                                  = 1 R/W (0x1)
CHIP_VERSION            Reserved for future chip versions                   = 2 R/W (0x2)
CHIP_PACKAGE            Chip package identifier                             = 0 R/W (0x0)
```

(下页继续)

(续上页)

```
Calibration fuses:
BLK3_PART_RESERVE      BLOCK3 partially served for ADC calibration data  = 1 R/W (0x1)
ADC_VREF               Voltage reference calibration                     = 1114 R/W (0x2)
ADC1_TP_LOW            ADC1 150mV reading                                = 346 R/W (0x11)
ADC1_TP_HIGH           ADC1 850mV reading                                = 3285 R/W (0x5)
ADC2_TP_LOW            ADC2 150mV reading                                = 449 R/W (0x7)
ADC2_TP_HIGH           ADC2 850mV reading                                = 3362 R/W␣
↪(0x1f5)

Flash voltage (VDD_SDIO) determined by GPIO12 on reset (High for 1.8V, Low/NC for 3.3V).
```

To get a dump for all eFuse registers.

```
espefuse.py -p COM4 dump

$ espefuse.py -p COM4 dump
espefuse.py v2.3.1
Connecting........__
EFUSE block 0:
00000000 c403bb68 0082240a 00000000 00000035 00000000 00000000
EFUSE block 1:
00000000 00000000 00000000 00000000 00000000 00000000 00000000 00000000
EFUSE block 2:
00000000 00000000 00000000 00000000 00000000 00000000 00000000 00000000
EFUSE block 3:
00000000 00000000 00000000 00000000 00000000 00000000 00000000 00000000
```

Header File

- efuse/include/esp_efuse.h

Functions

esp_err_t **esp_efuse_read_field_blob**(const *esp_efuse_desc_t* **field*[], void **dst*, size_t *dst_size_bits*)

Reads bits from EFUSE field and writes it into an array.

The number of read bits will be limited to the minimum value from the description of the bits in "field" structure or "dst_size_bits" required size. Use "esp_efuse_get_field_size()" function to determine the length of the field.

Return

- ESP_OK: The operation was successfully completed.
- ESP_ERR_INVALID_ARG: Error in the passed arguments.

Parameters

- `field`: A pointer to the structure describing the fields of efuse.
- `dst`: A pointer to array that will contain the result of reading.
- `dst_size_bits`: The number of bits required to read. If the requested number of bits is greater than the field, the number will be limited to the field size.

esp_err_t **esp_efuse_read_field_cnt(const** *esp_efuse_desc_t* ***field**[], size_t ***out_cnt**)

Reads bits from EFUSE field and returns number of bits programmed as "1".

If the bits are set not sequentially, they will still be counted.

Return

- ESP_OK: The operation was successfully completed.
- ESP_ERR_INVALID_ARG: Error in the passed arguments.

Parameters

- `field`: A pointer to the structure describing the fields of efuse.
- `out_cnt`: A pointer that will contain the number of programmed as "1" bits.

esp_err_t **esp_efuse_write_field_blob(const** *esp_efuse_desc_t* ***field**[], **const** void ***src**, size_t *src_size_bits*)

Writes array to EFUSE field.

The number of write bits will be limited to the minimum value from the description of the bits in "field" structure or "src_size_bits" required size. Use "esp_efuse_get_field_size()" function to determine the length of the field. After the function is completed, the writing registers are cleared.

Return

- ESP_OK: The operation was successfully completed.
- ESP_ERR_INVALID_ARG: Error in the passed arguments.
- ESP_ERR_EFUSE_REPEATED_PROG: Error repeated programming of programmed bits is strictly forbidden.
- ESP_ERR_CODING: Error range of data does not match the coding scheme.

Parameters

- `field`: A pointer to the structure describing the fields of efuse.
- `src`: A pointer to array that contains the data for writing.

- `src_size_bits`: The number of bits required to write.

esp_err_t **esp_efuse_write_field_cnt**(**const** *esp_efuse_desc_t* ***field*[], size_t *cnt*)

Writes a required count of bits as "1" to EFUSE field.

If there are no free bits in the field to set the required number of bits to "1", ESP_ERR_EFUSE_CNT_IS_FULL error is returned, the field will not be partially recorded. After the function is completed, the writing registers are cleared.

Return

- ESP_OK: The operation was successfully completed.
- ESP_ERR_INVALID_ARG: Error in the passed arguments.
- ESP_ERR_EFUSE_CNT_IS_FULL: Not all requested cnt bits is set.

Parameters

- `field`: A pointer to the structure describing the fields of efuse.
- `cnt`: Required number of programmed as "1" bits.

esp_err_t **esp_efuse_set_write_protect**(*esp_efuse_block_t blk*)

Sets a write protection for the whole block.

After that, it is impossible to write to this block. The write protection does not apply to block 0.

Return

- ESP_OK: The operation was successfully completed.
- ESP_ERR_INVALID_ARG: Error in the passed arguments.
- ESP_ERR_EFUSE_CNT_IS_FULL: Not all requested cnt bits is set.
- ESP_ERR_NOT_SUPPORTED: The block does not support this command.

Parameters

- `blk`: Block number of eFuse. (EFUSE_BLK1, EFUSE_BLK2 and EFUSE_BLK3)

esp_err_t **esp_efuse_set_read_protect**(*esp_efuse_block_t blk*)

Sets a read protection for the whole block.

After that, it is impossible to read from this block. The read protection does not apply to block 0.

Return

- ESP_OK: The operation was successfully completed.
- ESP_ERR_INVALID_ARG: Error in the passed arguments.
- ESP_ERR_EFUSE_CNT_IS_FULL: Not all requested cnt bits is set.
- ESP_ERR_NOT_SUPPORTED: The block does not support this command.

Parameters

- `blk`: Block number of eFuse. (EFUSE_BLK1, EFUSE_BLK2 and EFUSE_BLK3)

int **esp_efuse_get_field_size**(**const** *esp_efuse_desc_t* **field*[])

Returns the number of bits used by field.

Return Returns the number of bits used by field.

Parameters

- `field`: A pointer to the structure describing the fields of efuse.

uint32_t **esp_efuse_read_reg**(*esp_efuse_block_t blk*, unsigned int *num_reg*)

Returns value of efuse register.

This is a thread-safe implementation. Example: EFUSE_BLK2_RDATA3_REG where (blk=2, num_reg=3)

Return Value of register

Parameters

- `blk`: Block number of eFuse.
- `num_reg`: The register number in the block.

esp_err_t **esp_efuse_write_reg**(*esp_efuse_block_t blk*, unsigned int *num_reg*, uint32_t *val*)

Write value to efuse register.

Apply a coding scheme if necessary. This is a thread-safe implementation. Example: EFUSE_BLK3_WDATA0_REG where (blk=3, num_reg=0)

Return

- ESP_OK: The operation was successfully completed.
- ESP_ERR_EFUSE_REPEATED_PROG: Error repeated programming of programmed bits is strictly forbidden.

Parameters

- `blk`: Block number of eFuse.
- `num_reg`: The register number in the block.
- `val`: Value to write.

esp_efuse_coding_scheme_t **esp_efuse_get_coding_scheme**(*esp_efuse_block_t blk*)

Return efuse coding scheme for blocks.

Note: The coding scheme is applicable only to 1, 2 and 3 blocks. For 0 block, the coding scheme is always `NONE`.

Return Return efuse coding scheme for blocks

Parameters

- `blk`: Block number of eFuse.

esp_err_t **esp_efuse_read_block**(*esp_efuse_block_t blk*, void **dst_key*, size_t *offset_in_bits*, size_t *size_bits*)

Read key to efuse block starting at the offset and the required size.

Return

- ESP_OK: The operation was successfully completed.
- ESP_ERR_INVALID_ARG: Error in the passed arguments.
- ESP_ERR_CODING: Error range of data does not match the coding scheme.

Parameters

- `blk`: Block number of eFuse.
- `dst_key`: A pointer to array that will contain the result of reading.
- `offset_in_bits`: Start bit in block.
- `size_bits`: The number of bits required to read.

esp_err_t **esp_efuse_write_block**(*esp_efuse_block_t blk*, **const** void **src_key*, size_t *offset_in_bits*, size_t *size_bits*)

Write key to efuse block starting at the offset and the required size.

Return

- ESP_OK: The operation was successfully completed.
- ESP_ERR_INVALID_ARG: Error in the passed arguments.
- ESP_ERR_CODING: Error range of data does not match the coding scheme.
- ESP_ERR_EFUSE_REPEATED_PROG: Error repeated programming of programmed bits

Parameters

- `blk`: Block number of eFuse.
- `src_key`: A pointer to array that contains the key for writing.
- `offset_in_bits`: Start bit in block.
- `size_bits`: The number of bits required to write.

uint8_t **esp_efuse_get_chip_ver**(void)

Returns chip version from efuse.

Return chip version

uint32_t **esp_efuse_get_pkg_ver**(void)

Returns chip package from efuse.

Return chip package

void **esp_efuse_burn_new_values**(void)

void **esp_efuse_reset**(void)

void **esp_efuse_disable_basic_rom_console**(void)

esp_err_t **esp_efuse_apply_34_encoding**(**const** uint8_t **in_bytes*, uint32_t **out_words*, size_t *in_bytes_len*)

esp_err_t **esp_efuse_disable_rom_download_mode**(void)

void **esp_efuse_write_random_key**(uint32_t *blk_wdata0_reg*)

uint32_t **esp_efuse_read_secure_version**()

bool **esp_efuse_check_secure_version**(uint32_t *secure_version*)

esp_err_t **esp_efuse_update_secure_version**(uint32_t *secure_version*)

void **esp_efuse_init**(uint32_t *offset*, uint32_t *size*)

Structures

struct esp_efuse_desc_t

Structure eFuse field.

Public Members

esp_efuse_block_t **efuse_block**

Block of eFuse

uint8_t **bit_start**

Start bit [0..255]

uint16_t **bit_count**

Length of bit field [1..-]

Macros

ESP_ERR_EFUSE

Base error code for efuse api.

ESP_OK_EFUSE_CNT

OK the required number of bits is set.

ESP_ERR_EFUSE_CNT_IS_FULL
: Error field is full.

ESP_ERR_EFUSE_REPEATED_PROG
: Error repeated programming of programmed bits is strictly forbidden.

ESP_ERR_CODING
: Error while a encoding operation.

Enumerations

enum esp_efuse_block_t
: Type of eFuse blocks.

  Values:

  EFUSE_BLK0 = 0
  : Number of eFuse block. Reserved.

  EFUSE_BLK1 = 1
  : Number of eFuse block. Used for Flash Encryption. If not using that Flash Encryption feature, they can be used for another purpose.

  EFUSE_BLK2 = 2
  : Number of eFuse block. Used for Secure Boot. If not using that Secure Boot feature, they can be used for another purpose.

  EFUSE_BLK3 = 3
  : Number of eFuse block. Uses for the purpose of the user.

enum esp_efuse_coding_scheme_t
: Type of coding scheme.

  Values:

  EFUSE_CODING_SCHEME_NONE = 0
  : None

  EFUSE_CODING_SCHEME_3_4 = 1
  : 3/4 coding

  EFUSE_CODING_SCHEME_REPEAT = 2
  : Repeat coding

3.7.9 Inter-Processor Call

Overview

Due to the dual core nature of the ESP32, there are instances where a certain function must be run in the context of a particular core (e.g. allocating ISR to an interrupt source of a particular core). The IPC (Inter-Processor Call) feature allows for the execution of functions on a particular CPU.

A given function can be executed on a particular core by calling *esp_ipc_call()* or *esp_ipc_call_blocking()*. IPC is implemented via two high priority FreeRTOS tasks pinned to each CPU known as the IPC Tasks. The two IPC Tasks remain inactive (blocked) until *esp_ipc_call()* or *esp_ipc_call_blocking()* is called. When an IPC Task of a particular core is unblocked, it will preempt the current running task on that core and execute a given function.

Usage

esp_ipc_call() unblocks the IPC task on a particular core to execute a given function. The task that calls *esp_ipc_call()* will be blocked until the IPC Task begins execution of the given function. *esp_ipc_call_blocking()* is similar but will block the calling task until the IPC Task has completed execution of the given function.

Functions executed by IPCs must be functions of type *void func(void *arg)*. To run more complex functions which require a larger stack, the IPC tasks' stack size can be configured by modifying *CONFIG_IPC_TASK_STACK_SIZE* in *menuconfig*. The IPC API is protected by a mutex hence simultaneous IPC calls are not possible.

Care should taken to avoid deadlock when writing functions to be executed by IPC, especially when attempting to take a mutex within the function.

API Reference

Header File

- esp32/include/esp_ipc.h

Functions

esp_err_t **esp_ipc_call**(uint32_t *cpu_id*, esp_ipc_func_t *func*, void **arg*)

Execute a function on the given CPU.

Run a given function on a particular CPU. The given function must accept a void* argument and return void. The given function is run in the context of the IPC task of the CPU specified by the cpu_id parameter. The calling task will be blocked until the IPC task begins executing the given function. If another IPC call is ongoing, the calling task will block until the other IPC call completes. The stack size allocated for the IPC task can be configured in the "Inter-Processor Call (IPC) task

stack size" setting in menuconfig. Increase this setting if the given function requires more stack than default.

Note In single-core mode, returns ESP_ERR_INVALID_ARG for cpu_id 1.

Return

- ESP_ERR_INVALID_ARG if cpu_id is invalid
- ESP_ERR_INVALID_STATE if the FreeRTOS scheduler is not running
- ESP_OK otherwise

Parameters

- `cpu_id`: CPU where the given function should be executed (0 or 1)
- `func`: Pointer to a function of type void func(void* arg) to be executed
- `arg`: Arbitrary argument of type void* to be passed into the function

esp_err_t **esp_ipc_call_blocking**(uint32_t *cpu_id*, esp_ipc_func_t *func*, void **arg*)

Execute a function on the given CPU and blocks until it completes.

Run a given function on a particular CPU. The given function must accept a void* argument and return void. The given function is run in the context of the IPC task of the CPU specified by the cpu_id parameter. The calling task will be blocked until the IPC task completes execution of the given function. If another IPC call is ongoing, the calling task will block until the other IPC call completes. The stack size allocated for the IPC task can be configured in the "Inter-Processor Call (IPC) task stack size" setting in menuconfig. Increase this setting if the given function requires more stack than default.

Note In single-core mode, returns ESP_ERR_INVALID_ARG for cpu_id 1.

Return

- ESP_ERR_INVALID_ARG if cpu_id is invalid
- ESP_ERR_INVALID_STATE if the FreeRTOS scheduler is not running
- ESP_OK otherwise

Parameters

- `cpu_id`: CPU where the given function should be executed (0 or 1)
- `func`: Pointer to a function of type void func(void* arg) to be executed
- `arg`: Arbitrary argument of type void* to be passed into the function

3.7.10 High Resolution Timer

Overview

Although FreeRTOS provides software timers, these timers have a few limitations:

- Maximum resolution is equal to RTOS tick period
- Timer callbacks are dispatched from a low-priority task

Hardware timers are free from both of the limitations, but often they are less convenient to use. For example, application components may need timer events to fire at certain times in the future, but the hardware timer only contains one "compare" value used for interrupt generation. This means that some facility needs to be built on top of the hardware timer to manage the list of pending events can dispatch the callbacks for these events as corresponding hardware interrupts happen.

`esp_timer` set of APIs provide such facility. Internally, `esp_timer` uses a 32-bit hardware timer (FRC1, "legacy" timer). `esp_timer` provides one-shot and periodic timers, microsecond time resolution, and 64-bit range.

Timer callbacks are dispatched from a high-priority `esp_timer` task. Because all the callbacks are dispatched from the same task, it is recommended to only do the minimal possible amount of work from the callback itself, posting an event to a lower priority task using a queue instead.

If other tasks with priority higher than `esp_timer` are running, callback dispatching will be delayed until `esp_timer` task has a chance to run. For example, this will happen if a SPI Flash operation is in progress.

Creating and starting a timer, and dispatching the callback takes some time. Therefore there is a lower limit to the timeout value of one-shot `esp_timer`. If *esp_timer_start_once()* is called with a timeout value less than 20us, the callback will be dispatched only after approximately 20us.

Periodic `esp_timer` also imposes a 50us restriction on the minimal timer period. Periodic software timers with period of less than 50us are not practical since they would consume most of the CPU time. Consider using dedicated hardware peripherals or DMA features if you find that a timer with small period is required.

Using `esp_timer` APIs

Single timer is represented by *esp_timer_handle_t* type. Timer has a callback function associated with it. This callback function is called from the `esp_timer` task each time the timer elapses.

- To create a timer, call *esp_timer_create()*.
- To delete the timer when it is no longer needed, call *esp_timer_delete()*.

The timer can be started in one-shot mode or in periodic mode.

- To start the timer in one-shot mode, call *esp_timer_start_once()*, passing the time interval after which the callback should be called. When the callback gets called, the timer is considered to be stopped.

- To start the timer in periodic mode, call *esp_timer_start_periodic()*, passing the period with which the callback should be called. The timer keeps running until *esp_timer_stop()* is called.

Note that the timer must not be running when *esp_timer_start_once()* or *esp_timer_start_periodic()* is called. To restart a running timer, call *esp_timer_stop()* first, then call one of the start functions.

Obtaining Current Time

`esp_timer` also provides a convenience function to obtain the time passed since start-up, with microsecond precision: *esp_timer_get_time()*. This function returns the number of microseconds since `esp_timer` was initialized, which usually happens shortly before `app_main` function is called.

Unlike *gettimeofday* function, values returned by *esp_timer_get_time()*:

- Start from zero after the chip wakes up from deep sleep
- Do not have timezone or DST adjustments applied

Application Example

The following example illustrates usage of `esp_timer` APIs: system/esp_timer.

API Reference

Header File

- esp32/include/esp_timer.h

Functions

esp_err_t **esp_timer_init**()

Initialize esp_timer library.

Note This function is called from startup code. Applications do not need to call this function before using other esp_timer APIs.

Return

- ESP_OK on success
- ESP_ERR_NO_MEM if allocation has failed
- ESP_ERR_INVALID_STATE if already initialized
- other errors from interrupt allocator

esp_err_t **esp_timer_deinit()**

De-initialize esp_timer library.

Note Normally this function should not be called from applications

Return

- ESP_OK on success
- ESP_ERR_INVALID_STATE if not yet initialized

esp_err_t **esp_timer_create(const** *esp_timer_create_args_t* **create_args*, *esp_timer_handle_t* **out_handle*)

Create an esp_timer instance.

Note When done using the timer, delete it with esp_timer_delete function.

Return

- ESP_OK on success
- ESP_ERR_INVALID_ARG if some of the create_args are not valid
- ESP_ERR_INVALID_STATE if esp_timer library is not initialized yet
- ESP_ERR_NO_MEM if memory allocation fails

Parameters

- `create_args`: Pointer to a structure with timer creation arguments. Not saved by the library, can be allocated on the stack.
- `out_handle`: Output, pointer to esp_timer_handle_t variable which will hold the created timer handle.

esp_err_t **esp_timer_start_once(***esp_timer_handle_t timer*, uint64_t *timeout_us*)

Start one-shot timer.

Timer should not be running when this function is called.

Return

- ESP_OK on success
- ESP_ERR_INVALID_ARG if the handle is invalid
- ESP_ERR_INVALID_STATE if the timer is already running

Parameters

- `timer`: timer handle created using esp_timer_create
- `timeout_us`: timer timeout, in microseconds relative to the current moment

esp_err_t **esp_timer_start_periodic**(*esp_timer_handle_t timer*, uint64_t *period*)

Start a periodic timer.

Timer should not be running when this function is called. This function will start the timer which will trigger every 'period' microseconds.

Return

- ESP_OK on success
- ESP_ERR_INVALID_ARG if the handle is invalid
- ESP_ERR_INVALID_STATE if the timer is already running

Parameters

- `timer`: timer handle created using esp_timer_create
- `period`: timer period, in microseconds

esp_err_t **esp_timer_stop**(*esp_timer_handle_t timer*)

Stop the timer.

This function stops the timer previously started using esp_timer_start_once or esp_timer_start_periodic.

Return

- ESP_OK on success
- ESP_ERR_INVALID_STATE if the timer is not running

Parameters

- `timer`: timer handle created using esp_timer_create

esp_err_t **esp_timer_delete**(*esp_timer_handle_t timer*)

Delete an esp_timer instance.

The timer must be stopped before deleting. A one-shot timer which has expired does not need to be stopped.

Return

- ESP_OK on success
- ESP_ERR_INVALID_STATE if the timer is not running

Parameters

- `timer`: timer handle allocated using esp_timer_create

int64_t **esp_timer_get_time()**

Get time in microseconds since boot.

Return number of microseconds since esp_timer_init was called (this normally happens early during application startup).

int64_t **esp_timer_get_next_alarm()**

Get the timestamp when the next timeout is expected to occur.

Return Timestamp of the nearest timer event, in microseconds. The timebase is the same as for the values returned by esp_timer_get_time.

esp_err_t **esp_timer_dump**(FILE **stream*)

Dump the list of timers to a stream.

If CONFIG_ESP_TIMER_PROFILING option is enabled, this prints the list of all the existing timers. Otherwise, only the list active timers is printed.

The format is:

name period alarm times_armed times_triggered total_callback_run_time

where:

name —timer name (if CONFIG_ESP_TIMER_PROFILING is defined), or timer pointer period — period of timer, in microseconds, or 0 for one-shot timer alarm - time of the next alarm, in microseconds since boot, or 0 if the timer is not started

The following fields are printed if CONFIG_ESP_TIMER_PROFILING is defined:

times_armed —number of times the timer was armed via esp_timer_start_X times_triggered - number of times the callback was called total_callback_run_time - total time taken by callback to execute, across all calls

Return

- ESP_OK on success
- ESP_ERR_NO_MEM if can not allocate temporary buffer for the output

Parameters

- **stream**: stream (such as stdout) to dump the information to

Structures

struct esp_timer_create_args_t

Timer configuration passed to esp_timer_create.

Public Members

esp_timer_cb_t **callback**

Function to call when timer expires.

void ***arg**

Argument to pass to the callback.

esp_timer_dispatch_t **dispatch_method**

Call the callback from task or from ISR.

const char ***name**

Timer name, used in esp_timer_dump function.

Type Definitions

typedef struct esp_timer ***esp_timer_handle_t**

Opaque type representing a single esp_timer.

typedef void (***esp_timer_cb_t**)(void *arg)

Timer callback function type.

Parameters

- **arg**: pointer to opaque user-specific data

Enumerations

enum esp_timer_dispatch_t

Method for dispatching timer callback.

Values:

ESP_TIMER_TASK

Callback is called from timer task.

3.7.11 Logging library

Overview

Log library has two ways of managing log verbosity: compile time, set via menuconfig; and runtime, using *esp_log_level_set()* function.

The log levels are Error, Warning, Info, Debug, and Verbose (from lowest to highest level of verbosity).

At compile time, filtering is done using CONFIG_LOG_DEFAULT_LEVEL option, set via menuconfig. All logging statements for levels higher than CONFIG_LOG_DEFAULT_LEVEL will be removed by the preprocessor.

At run time, all logs below `CONFIG_LOG_DEFAULT_LEVEL` are enabled by default. *esp_log_level_set()* function may be used to reduce logging level per module. Modules are identified by their tags, which are human-readable ASCII zero-terminated strings.

Note that *esp_log_level_set()* can not increase logging level beyound that set by `CONFIG_LOG_DEFAULT_LEVEL`. To increase log level for a specific file at compile time, *LOG_LOCAL_LEVEL* macro can be used (see below for details).

How to use this library

In each C file which uses logging functionality, define TAG variable like this:

```
static const char* TAG = "MyModule";
```

then use one of logging macros to produce output, e.g:

```
ESP_LOGW(TAG, "Baud rate error %.1f%%. Requested: %d baud, actual: %d baud", error * 100,
↪ baud_req, baud_real);
```

Several macros are available for different verbosity levels:

- `ESP_LOGE` - error (lowest)
- `ESP_LOGW` - warning
- `ESP_LOGI` - info
- `ESP_LOGD` - debug
- `ESP_LOGV` - verbose (highest)

Additionally there is an `_EARLY` variant for each of these macros (e.g. *ESP_EARLY_LOGE*). These variants can run in startup code, before heap allocator and syscalls have been initialized. When compiling bootloader, normal `ESP_LOGx` macros fall back to the same implementation as `ESP_EARLY_LOGx` macros. So the only place where `ESP_EARLY_LOGx` have to be used explicitly is the early startup code, such as heap allocator initialization code.

To override default verbosity level at file or component scope, define `LOG_LOCAL_LEVEL` macro. At file scope, define it before including `esp_log.h`, e.g.:

```
#define LOG_LOCAL_LEVEL ESP_LOG_VERBOSE
#include "esp_log.h"
```

At component scope, define it in component makefile:

```
CFLAGS += -D LOG_LOCAL_LEVEL=ESP_LOG_DEBUG
```

To configure logging output per module at runtime, add calls to *esp_log_level_set()* function:

```
esp_log_level_set("*", ESP_LOG_ERROR);        // set all components to ERROR level
esp_log_level_set("wifi", ESP_LOG_WARN);      // enable WARN logs from WiFi stack
esp_log_level_set("dhcpc", ESP_LOG_INFO);     // enable INFO logs from DHCP client
```

Logging to Host via JTAG

By default logging library uses vprintf-like function to write formatted output to dedicated UART. By calling a simple API, all log output may be routed to JTAG instead, making logging several times faster. For details please refer to section *Logging to Host*.

Application Example

Log library is commonly used by most of esp-idf components and examples. For demonstration of log functionality check examples folder of espressif/esp-idf repository, that among others, contains the following examples:

- system/ota
- storage/sd_card
- protocols/https_request

API Reference

Header File

- log/include/esp_log.h

Functions

void **esp_log_level_set**(**const** char *_tag_, *esp_log_level_t* _level_)

Set log level for given tag.

If logging for given component has already been enabled, changes previous setting.

Note that this function can not raise log level above the level set using CONFIG_LOG_DEFAULT_LEVEL setting in menuconfig.

To raise log level above the default one for a given file, define LOG_LOCAL_LEVEL to one of the ESP_LOG_* values, before including esp_log.h in this file.

Parameters

- `tag`: Tag of the log entries to enable. Must be a non-NULL zero terminated string. Value "*" resets log level for all tags to the given value.
- `level`: Selects log level to enable. Only logs at this and lower verbosity levels will be shown.

vprintf_like_t **esp_log_set_vprintf**(*vprintf_like_t func*)

Set function used to output log entries.

By default, log output goes to UART0. This function can be used to redirect log output to some other destination, such as file or network. Returns the original log handler, which may be necessary to return output to the previous destination.

Return func old Function used for output.

Parameters

- `func`: new Function used for output. Must have same signature as vprintf.

uint32_t **esp_log_timestamp**(void)

Function which returns timestamp to be used in log output.

This function is used in expansion of ESP_LOGx macros. In the 2nd stage bootloader, and at early application startup stage this function uses CPU cycle counter as time source. Later when FreeRTOS scheduler start running, it switches to FreeRTOS tick count.

For now, we ignore millisecond counter overflow.

Return timestamp, in milliseconds

uint32_t **esp_log_early_timestamp**(void)

Function which returns timestamp to be used in log output.

This function uses HW cycle counter and does not depend on OS, so it can be safely used after application crash.

Return timestamp, in milliseconds

void **esp_log_write**(*esp_log_level_t level*, **const** char **tag*, **const** char **format*, ...)

Write message into the log.

This function is not intended to be used directly. Instead, use one of ESP_LOGE, ESP_LOGW, ESP_LOGI, ESP_LOGD, ESP_LOGV macros.

This function or these macros should not be used from an interrupt.

Macros

`ESP_LOG_BUFFER_HEX_LEVEL`(tag, buffer, buff_len, level)

Log a buffer of hex bytes at specified level, separated into 16 bytes each line.

Parameters

- `tag`: description tag
- `buffer`: Pointer to the buffer array
- `buff_len`: length of buffer in bytes
- `level`: level of the log

`ESP_LOG_BUFFER_CHAR_LEVEL`(tag, buffer, buff_len, level)

Log a buffer of characters at specified level, separated into 16 bytes each line. Buffer should contain only printable characters.

Parameters

- `tag`: description tag
- `buffer`: Pointer to the buffer array
- `buff_len`: length of buffer in bytes
- `level`: level of the log

`ESP_LOG_BUFFER_HEXDUMP`(tag, buffer, buff_len, level)

Dump a buffer to the log at specified level.

The dump log shows just like the one below:

```
W (195) log_example: 0x3ffb4280   45 53 50 33 32 20 69 73  20 67 72 65 61 74 2c 20␣
↪ |ESP32 is great, |
W (195) log_example: 0x3ffb4290   77 6f 72 6b 69 6e 67 20  61 6c 6f 6e 67 20 77 69␣
↪ |working along wi|
W (205) log_example: 0x3ffb42a0   74 68 20 74 68 65 20 49  44 46 2e 00              ␣
↪ |th the IDF..|
```

It is highly recommend to use terminals with over 102 text width.

Parameters

- `tag`: description tag
- `buffer`: Pointer to the buffer array
- `buff_len`: length of buffer in bytes

- `level`: level of the log

`ESP_LOG_BUFFER_HEX`(tag, buffer, buff_len)

Log a buffer of hex bytes at Info level.

See `esp_log_buffer_hex_level`

Parameters

- `tag`: description tag
- `buffer`: Pointer to the buffer array
- `buff_len`: length of buffer in bytes

`ESP_LOG_BUFFER_CHAR`(tag, buffer, buff_len)

Log a buffer of characters at Info level. Buffer should contain only printable characters.

See `esp_log_buffer_char_level`

Parameters

- `tag`: description tag
- `buffer`: Pointer to the buffer array
- `buff_len`: length of buffer in bytes

`ESP_EARLY_LOGE`(tag, format, ...)

macro to output logs in startup code, before heap allocator and syscalls have been initialized. log at `ESP_LOG_ERROR` level.

See `printf`,`ESP_LOGE`

`ESP_EARLY_LOGW`(tag, format, ...)

macro to output logs in startup code at `ESP_LOG_WARN` level.

See `ESP_EARLY_LOGE`,`ESP_LOGE`, `printf`

`ESP_EARLY_LOGI`(tag, format, ...)

macro to output logs in startup code at `ESP_LOG_INFO` level.

See `ESP_EARLY_LOGE`,`ESP_LOGE`, `printf`

`ESP_EARLY_LOGD`(tag, format, ...)

macro to output logs in startup code at `ESP_LOG_DEBUG` level.

See `ESP_EARLY_LOGE`,`ESP_LOGE`, `printf`

ESP_EARLY_LOGV(tag, format, ...)

macro to output logs in startup code at ESP_LOG_VERBOSE level.

See ESP_EARLY_LOGE,ESP_LOGE, printf

ESP_LOG_EARLY_IMPL(tag, format, log_level, log_tag_letter, ...)

ESP_LOGE(tag, format, ...)

ESP_LOGW(tag, format, ...)

ESP_LOGI(tag, format, ...)

ESP_LOGD(tag, format, ...)

ESP_LOGV(tag, format, ...)

ESP_LOG_LEVEL(level, tag, format, ...)

runtime macro to output logs at a specified level.

See printf

Parameters

- tag: tag of the log, which can be used to change the log level by esp_log_level_set at runtime.
- level: level of the output log.
- format: format of the output log. see printf
- ...: variables to be replaced into the log. see printf

ESP_LOG_LEVEL_LOCAL(level, tag, format, ...)

runtime macro to output logs at a specified level. Also check the level with LOG_LOCAL_LEVEL.

See printf, ESP_LOG_LEVEL

Type Definitions

typedef int (*vprintf_like_t)(const char *, va_list)

Enumerations

enum esp_log_level_t

Log level.

Values:

`ESP_LOG_NONE`
: No log output

`ESP_LOG_ERROR`
: Critical errors, software module can not recover on its own

`ESP_LOG_WARN`
: Error conditions from which recovery measures have been taken

`ESP_LOG_INFO`
: Information messages which describe normal flow of events

`ESP_LOG_DEBUG`
: Extra information which is not necessary for normal use (values, pointers, sizes, etc).

`ESP_LOG_VERBOSE`
: Bigger chunks of debugging information, or frequent messages which can potentially flood the output.

3.7.12 Event Loop Library

Overview

The event loop library allows components to declare events to which other components can register handlers – code which will execute when those events occur. This allows loosely coupled components to attach desired behavior to changes in state of other components without application involvement. For instance, a high level connection handling library may subscribe to events produced by the wifi subsystem directly and act on those events. This also simplifies event processing by serializing and deferring code execution to another context.

Using `esp_event` APIs

There are two objects of concern for users of this library: events and event loops.

Events are occurences of note. For example, for WiFi, a successful connection to the access point may be an event. Events are referenced using a two part identifier which are discussed more *here*. Event loops are the vehicle by which events get posted by event sources and handled by event handler functions. These two appear prominently in the event loop library APIs.

Using this library roughly entails the following flow:

1. A user defines a function that should run when an event is posted to a loop. This function is referred to as the event handler. It should have the same signature as *esp_event_handler_t*.
2. An event loop is created using *esp_event_loop_create()*, which outputs a handle to the loop of type *esp_event_loop_handle_t*. Event loops created using this API are referred to as user event loops. There is, however, a special type of event loop called the default event loop which are discussed *here*.

3. Components register event handlers to the loop using *esp_event_handler_register_with()*. Handlers can be registered with multiple loops, more on that *here*.
4. Event sources post an event to the loop using *esp_event_post_to()*.
5. Components wanting to remove their handlers from being called can do so by unregistering from the loop using *esp_event_handler_unregister_with()*.
6. Event loops which are no longer needed can be deleted using *esp_event_loop_delete()*.

In code, the flow above may look like as follows:

```
// 1. Define the event handler
void run_on_event(void* handler_arg, esp_event_base_t base, int32_t id, void* event_data)
{
    // Event handler logic
}

void app_main()
{
    // 2. A configuration structure of type esp_event_loop_args_t is needed to specify␣
↪the properties of the loop to be
    // created. A handle of type esp_event_loop_handle_t is obtained, which is needed by␣
↪the other APIs to reference the loop
    // to perform their operations on.
    esp_event_loop_args_t loop_args = {
        .queue_size = ...,
        .task_name = ...
        .task_priority = ...,
        .task_stack_size = ...,
        .task_core_id = ...
    };

    esp_event_loop_handle_t loop_handle;

    esp_event_loop_create(&loop_args, &loop_handle);

    // 3. Register event handler defined in (1). MY_EVENT_BASE and MY_EVENT_ID specifies␣
↪a hypothetical
    // event that handler run_on_event should execute on when it gets posted to the loop.
    esp_event_handler_register_with(loop_handle, MY_EVENT_BASE, MY_EVENT_ID, run_on_
↪event, ...);

    ...
```

(下页继续)

(续上页)

```
    // 4. Post events to the loop. This queues the event on the event loop. At some␣
↪point in time
    // the event loop executes the event handler registered to the posted event, in this␣
↪case run_on_event.
    // For simplicity sake this example calls esp_event_post_to from app_main, but␣
↪posting can be done from
    // any other tasks (which is the more interesting use case).
    esp_event_post_to(loop_handle, MY_EVENT_BASE, MY_EVENT_ID, ...);

    ...

    // 5. Unregistering an unneeded handler
    esp_event_handler_unregister_with(loop_handle, MY_EVENT_BASE, MY_EVENT_ID, run_on_
↪event);

    ...

    // 6. Deleting an unneeded event loop
    esp_event_loop_delete(loop_handle);
}
```

Declaring and defining events

As mentioned previously, events consists of two-part identifers: the event base and the event ID. The event base identifies an independent group of events; the event ID identifies the event within that group. Think of the event base and event ID as a person' s last name and first name, respectively. A last name identifies a family, and the first name identifies a person within that family.

The event loop library provides macros to declare and define the event base easily.

Event base declaration:

```
ESP_EVENT_DECLARE_BASE(EVENT_BASE)
```

Event base definition:

```
ESP_EVENT_DEFINE_BASE(EVENT_BASE)
```

注解: In IDF, the base identifiers for system events are uppercase and are postfixed with `_EVENT`. For example, the base for wifi events is declared and defined as `WIFI_EVENT`, the ethernet event base `ETHERNET_EVENT`,

and so on. The purpose is to have event bases look like constants (although they are global variables considering the defintions of macros `ESP_EVENT_DECLARE_BASE` and `ESP_EVENT_DEFINE_BASE`).

For event ID' s, declaring them as enumerations is recommended. Once again, for visibility, these are typically placed in public header files.

Event ID:

```
enum {
    EVENT_ID_1,
    EVENT_ID_2,
    EVENT_ID_3,
    ...
}
```

Default Event Loop

The default event loop is a special type of loop used for system events (WiFi events, for example). The handle for this loop is hidden from the user. The creation, deletion, handler registration/unregistration and posting of events is done through a variant of the APIs for user event loops. The table below enumerates those variants, and the user event loops equivalent.

User Event Loops	Default Event Loops
esp_event_loop_create()	*esp_event_loop_create_default()*
esp_event_loop_delete()	*esp_event_loop_delete_default()*
esp_event_handler_register_with()	*esp_event_handler_register()*
esp_event_handler_unregister_with()	*esp_event_handler_unregister()*
esp_event_post_to()	*esp_event_post()*

If you compare the signatures for both, they are mostly similar except the for the lack of loop handle specification for the default event loop APIs.

Other than the API difference and the special designation to which system events are posted to, there is no difference to how default event loops and user event loops behave. It is even possible for users to post their own events to the default event loop, should the user opt to not create their own loops to save memory.

Notes on Handler Registration

It is possible to register a single handler to multiple events individually, i.e. using multiple calls to *esp_event_handler_register_with()*. For those multiple calls, the specific event base and event ID can be specified with which the handler should execute.

However, in some cases it is desirable for a handler to execute on (1) all events that get posted to a loop or (2) all events of a particular base identifier. This is possible using the special event base identifier `ESP_EVENT_ANY_BASE` and special event ID `ESP_EVENT_ANY_ID`. These special identifiers may be passed as the event base and event ID arguments for *esp_event_handler_register_with()*.

Therefore, the valid arguments to *esp_event_handler_register_with()* are:

1. <event base>, <event ID> - handler executes when the event with base <event base> and event ID <event ID> gets posted to the loop
2. <event base>, ESP_EVENT_ANY_ID - handler executes when any event with base <event base> gets posted to the loop
3. ESP_EVENT_ANY_BASE, ESP_EVENT_ANY_ID - handler executes when any event gets posted to the loop

As an example, suppose the following handler registrations were performed:

```
esp_event_handler_register_with(loop_handle, MY_EVENT_BASE, MY_EVENT_ID, run_on_event_1,␣
↪...);
esp_event_handler_register_with(loop_handle, MY_EVENT_BASE, ESP_EVENT_ANY_ID, run_on_
↪event_2, ...);
esp_event_handler_register_with(loop_handle, ESP_EVENT_ANY_BASE, ESP_EVENT_ANY_ID, run_
↪on_event_3, ...);
```

If the hypothetical event `MY_EVENT_BASE`, `MY_EVENT_ID` is posted, all three handlers `run_on_event_1`, `run_on_event_2`, and `run_on_event_3` would execute.

If the hypothetical event `MY_EVENT_BASE`, `MY_OTHER_EVENT_ID` is posted, only `run_on_event_2` and `run_on_event_3` would execute.

If the hypothetical event `MY_OTHER_EVENT_BASE`, `MY_OTHER_EVENT_ID` is posted, only `run_on_event_3` would execute.

Handler Registration and Handler Dispatch Order

The general rule is that for handlers that match a certain posted event during dispatch, those which are registered first also gets executed first. The user can then control which handlers get executed first by registering them before other handlers, provided that all registrations are performed using a single task. If the user plans to take advantage of this behavior, caution must be exercised if there are multiple tasks registering handlers. While the 'first registered, first executed' behavior still holds true, the task which gets executed first will also get their handlers registered first. Handlers registered one after the other by a single task will still be dispatched in the order relative to each other, but if that task gets pre-empted in between registration by another task which also registers handlers; then during dispatch those handlers will also get executed in between.

Event loop profiling

A configuration option `CONFIG_EVENT_LOOP_PROFILING` can be enabled in order to activate statistics collection for all event loops created. The function *esp_event_dump()* can be used to output the collected statistics to a file stream. More details on the information included in the dump can be found in the *esp_event_dump()* API Reference.

Application Example

Examples on using the `esp_event` library can be found in system/esp_event. The examples cover event declaration, loop creation, handler registration and unregistration and event posting.

Other examples which also adopt esp_event library:

- NMEA Parser , which will decode the statements received from GPS.

API Reference

Header File

- esp_event/include/esp_event.h

Functions

esp_err_t **esp_event_loop_create**(const *esp_event_loop_args_t* **event_loop_args*, *esp_event_loop_handle_t* **event_loop*)

Create a new event loop.

Return

- ESP_OK: Success
- ESP_ERR_NO_MEM: Cannot allocate memory for event loops list
- ESP_FAIL: Failed to create task loop
- Others: Fail

Parameters

- `event_loop_args`: configuration structure for the event loop to create
- `event_loop`: handle to the created event loop

esp_err_t **esp_event_loop_delete**(*esp_event_loop_handle_t* *event_loop*)

Delete an existing event loop.

Return

- ESP_OK: Success
- Others: Fail

Parameters

- `event_loop`: event loop to delete

esp_err_t **esp_event_loop_create_default()**

Create default event loop.

Return

- ESP_OK: Success
- ESP_ERR_NO_MEM: Cannot allocate memory for event loops list
- ESP_FAIL: Failed to create task loop
- Others: Fail

esp_err_t **esp_event_loop_delete_default()**

Delete the default event loop.

Return

- ESP_OK: Success
- Others: Fail

esp_err_t **esp_event_loop_run**(*esp_event_loop_handle_t event_loop*, TickType_t *ticks_to_run*)

Dispatch events posted to an event loop.

This function is used to dispatch events posted to a loop with no dedicated task, i.e task name was set to NULL in event_loop_args argument during loop creation. This function includes an argument to limit the amount of time it runs, returning control to the caller when that time expires (or some time afterwards). There is no guarantee that a call to this function will exit at exactly the time of expiry. There is also no guarantee that events have been dispatched during the call, as the function might have spent all of the alloted time waiting on the event queue. Once an event has been unqueued, however, it is guaranteed to be dispatched. This guarantee contributes to not being able to exit exactly at time of expiry as (1) blocking on internal mutexes is necessary for dispatching the unqueued event, and (2) during dispatch of the unqueued event there is no way to control the time occupied by handler code execution. The guaranteed time of exit is therefore the alloted time + amount of time required to dispatch the last unqueued event.

In cases where waiting on the queue times out, ESP_OK is returned and not ESP_ERR_TIMEOUT, since it is normal behavior.

Note encountering an unknown event that has been posted to the loop will only generate a warning, not an error.

Return

- ESP_OK: Success
- Others: Fail

Parameters

- `event_loop`: event loop to dispatch posted events from
- `ticks_to_run`: number of ticks to run the loop

esp_err_t **esp_event_handler_register**(*esp_event_base_t event_base*, int32_t *event_id*, *esp_event_handler_t event_handler*, void **event_handler_arg*)

Register an event handler to the system event loop.

This function can be used to register a handler for either: (1) specific events, (2) all events of a certain event base, or (3) all events known by the system event loop.

- specific events: specify exact event_base and event_id
- all events of a certain base: specify exact event_base and use ESP_EVENT_ANY_ID as the event_id
- all events known by the loop: use ESP_EVENT_ANY_BASE for event_base and ESP_EVENT_ANY_ID as the event_id

Registering multiple handlers to events is possible. Registering a single handler to multiple events is also possible. However, registering the same handler to the same event multiple times would cause the previous registrations to be overwritten.

Note the event loop library does not maintain a copy of event_handler_arg, therefore the user should ensure that event_handler_arg still points to a valid location by the time the handler gets called

Return

- ESP_OK: Success
- ESP_ERR_NO_MEM: Cannot allocate memory for the handler
- ESP_ERR_INVALID_ARG: Invalid combination of event base and event id
- Others: Fail

Parameters

- `event_base`: the base id of the event to register the handler for
- `event_id`: the id of the event to register the handler for
- `event_handler`: the handler function which gets called when the event is dispatched

- `event_handler_arg`: data, aside from event data, that is passed to the handler when it is called

esp_err_t **esp_event_handler_register_with**(*esp_event_loop_handle_t event_loop*, *esp_event_base_t event_base*, int32_t *event_id*, *esp_event_handler_t event_handler*, void **event_handler_arg*)

Register an event handler to a specific loop.

This function behaves in the same manner as esp_event_handler_register, except the additional specification of the event loop to register the handler to.

Note the event loop library does not maintain a copy of event_handler_arg, therefore the user should ensure that event_handler_arg still points to a valid location by the time the handler gets called

Return

- ESP_OK: Success
- ESP_ERR_NO_MEM: Cannot allocate memory for the handler
- ESP_ERR_INVALID_ARG: Invalid combination of event base and event id
- Others: Fail

Parameters

- `event_loop`: the event loop to register this handler function to
- `event_base`: the base id of the event to register the handler for
- `event_id`: the id of the event to register the handler for
- `event_handler`: the handler function which gets called when the event is dispatched
- `event_handler_arg`: data, aside from event data, that is passed to the handler when it is called

esp_err_t **esp_event_handler_unregister**(*esp_event_base_t event_base*, int32_t *event_id*, *esp_event_handler_t event_handler*)

Unregister a handler with the system event loop.

This function can be used to unregister a handler so that it no longer gets called during dispatch. Handlers can be unregistered for either: (1) specific events, (2) all events of a certain event base, or (3) all events known by the system event loop

- specific events: specify exact event_base and event_id
- all events of a certain base: specify exact event_base and use ESP_EVENT_ANY_ID as the event_id

- all events known by the loop: use ESP_EVENT_ANY_BASE for event_base and ESP_EVENT_ANY_ID as the event_id

This function ignores unregistration of handlers that has not been previously registered.

Return ESP_OK success

Return ESP_ERR_INVALID_ARG invalid combination of event base and event id

Return others fail

Parameters

- `event_base`: the base of the event with which to unregister the handler
- `event_id`: the id of the event with which to unregister the handler
- `event_handler`: the handler to unregister

esp_err_t **esp_event_handler_unregister_with**(*esp_event_loop_handle_t event_loop*, *esp_event_base_t event_base*, int32_t *event_id*, *esp_event_handler_t event_handler*)

Unregister a handler with the system event loop.

This function behaves in the same manner as esp_event_handler_unregister, except the additional specification of the event loop to unregister the handler with.

Return

- ESP_OK: Success
- ESP_ERR_INVALID_ARG: Invalid combination of event base and event id
- Others: Fail

Parameters

- `event_loop`: the event loop with which to unregister this handler function
- `event_base`: the base of the event with which to unregister the handler
- `event_id`: the id of the event with which to unregister the handler
- `event_handler`: the handler to unregister

esp_err_t **esp_event_post**(*esp_event_base_t event_base*, int32_t *event_id*, void **event_data*, size_t *event_data_size*, TickType_t *ticks_to_wait*)

Posts an event to the system default event loop. The event loop library keeps a copy of event_data and manages the copy' s lifetime automatically (allocation + deletion); this ensures that the data the handler recieves is always valid.

Note posting events from an ISR is not supported

Return

- ESP_OK: Success
- ESP_ERR_TIMEOUT: Time to wait for event queue to unblock expired
- ESP_ERR_INVALID_ARG: Invalid combination of event base and event id
- Others: Fail

Parameters

- `event_base`: the event base that identifies the event
- `event_id`: the the event id that identifies the event
- `event_data`: the data, specific to the event occurence, that gets passed to the handler
- `event_data_size`: the size of the event data
- `ticks_to_wait`: number of ticks to block on a full event queue

esp_err_t **esp_event_post_to**(*esp_event_loop_handle_t event_loop*, *esp_event_base_t event_base*, int32_t *event_id*, void **event_data*, size_t *event_data_size*, TickType_t *ticks_to_wait*)

Posts an event to the specified event loop. The event loop library keeps a copy of event_data and manages the copy' s lifetime automatically (allocation + deletion); this ensures that the data the handler recieves is always valid.

This function behaves in the same manner as esp_event_post_to, except the additional specification of the event loop to post the event to.

Note posting events from an ISR is not supported

Return

- ESP_OK: Success
- ESP_ERR_TIMEOUT: Time to wait for event queue to unblock expired
- ESP_ERR_INVALID_ARG: Invalid combination of event base and event id
- Others: Fail

Parameters

- `event_loop`: the event loop to post to
- `event_base`: the event base that identifies the event
- `event_id`: the the event id that identifies the event
- `event_data`: the data, specific to the event occurence, that gets passed to the handler
- `event_data_size`: the size of the event data
- `ticks_to_wait`: number of ticks to block on a full event queue

esp_err_t **esp_event_dump**(FILE *file)

Dumps statistics of all event loops.

Dumps event loop info in the format:

```
     event loop
         handler
         handler
         ...
     event loop
         handler
         handler
         ...

 where:

  event loop
     format: address,name rx:total_recieved dr:total_dropped
     where:
         address - memory address of the event loop
         name - name of the event loop, 'none' if no dedicated task
         total_recieved - number of successfully posted events
         total_dropped - number of events unsuccessfully posted due to queue being␣
↪full

  handler
     format: address ev:base,id inv:total_invoked run:total_runtime
     where:
         address - address of the handler function
         base,id - the event specified by event base and id this handler executes
         total_invoked - number of times this handler has been invoked
         total_runtime - total amount of time used for invoking this handler
```

Note this function is a noop when CONFIG_EVENT_LOOP_PROFILING is disabled

Return

- ESP_OK: Success
- ESP_ERR_NO_MEM: Cannot allocate memory for event loops list
- Others: Fail

Parameters

- `file`: the file stream to output to

Structures

struct esp_event_loop_args_t

Configuration for creating event loops.

Public Members

int32_t **queue_size**

size of the event loop queue

const char ***task_name**

name of the event loop task; if NULL, a dedicated task is not created for event loop

UBaseType_t **task_priority**

priority of the event loop task, ignored if task name is NULL

uint32_t **task_stack_size**

stack size of the event loop task, ignored if task name is NULL

BaseType_t **task_core_id**

core to which the event loop task is pinned to, ignored if task name is NULL

Header File

- esp_event/include/esp_event_base.h

Macros

ESP_EVENT_DECLARE_BASE(id)

ESP_EVENT_DEFINE_BASE(id)

ESP_EVENT_ANY_BASE

register handler for any event base

ESP_EVENT_ANY_ID

register handler for any event id

Type Definitions

typedef const char ***esp_event_base_t**

unique pointer to a subsystem that exposes events

typedef void ***esp_event_loop_handle_t**

a number that identifies an event with respect to a base

typedef void (***esp_event_handler_t**)(void *event_handler_arg, *esp_event_base_t* event_base, int32_t event_id, void *event_data)

function called when an event is posted to the queue

3.7.13 Application Level Tracing

Overview

IDF provides useful feature for program behaviour analysis: application level tracing. It is implemented in the corresponding library and can be enabled via menuconfig. This feature allows to transfer arbitrary data between host and ESP32 via JTAG interface with small overhead on program execution. Developers can use this library to send application specific state of execution to the host and receive commands or other type of info in the opposite direction at runtime. The main use cases of this library are:

1. Collecting application specific data, see *Application Specific Tracing*
2. Lightweight logging to the host, see *Logging to Host*
3. System behaviour analysis, see *System Behaviour Analysis with SEGGER SystemView*

API Reference

Header File

- app_trace/include/esp_app_trace.h

Functions

esp_err_t **esp_apptrace_init**()

Initializes application tracing module.

Note Should be called before any esp_apptrace_xxx call.

Return ESP_OK on success, otherwise see esp_err_t

void **esp_apptrace_down_buffer_config**(uint8_t **buf*, uint32_t *size*)

Configures down buffer.

Note Needs to be called before initiating any data transfer using esp_apptrace_buffer_get and esp_apptrace_write. This function does not protect internal data by lock.

Parameters

- `buf`: Address of buffer to use for down channel (host to target) data.
- `size`: Size of the buffer.

uint8_t *esp_apptrace_buffer_get(*esp_apptrace_dest_t* *dest*, uint32_t *size*, uint32_t *tmo*)

Allocates buffer for trace data. After data in buffer are ready to be sent off esp_apptrace_buffer_put must be called to indicate it.

Return non-NULL on success, otherwise NULL.

Parameters

- `dest`: Indicates HW interface to send data.
- `size`: Size of data to write to trace buffer.
- `tmo`: Timeout for operation (in us). Use ESP_APPTRACE_TMO_INFINITE to wait indefinitely.

esp_err_t esp_apptrace_buffer_put(*esp_apptrace_dest_t* *dest*, uint8_t **ptr*, uint32_t *tmo*)

Indicates that the data in buffer are ready to be sent off. This function is a counterpart of and must be preceeded by esp_apptrace_buffer_get.

Return ESP_OK on success, otherwise see esp_err_t

Parameters

- `dest`: Indicates HW interface to send data. Should be identical to the same parameter in call to esp_apptrace_buffer_get.
- `ptr`: Address of trace buffer to release. Should be the value returned by call to esp_apptrace_buffer_get.
- `tmo`: Timeout for operation (in us). Use ESP_APPTRACE_TMO_INFINITE to wait indefinitely.

esp_err_t esp_apptrace_write(*esp_apptrace_dest_t* *dest*, const void **data*, uint32_t *size*, uint32_t *tmo*)

Writes data to trace buffer.

Return ESP_OK on success, otherwise see esp_err_t

Parameters

- `dest`: Indicates HW interface to send data.
- `data`: Address of data to write to trace buffer.
- `size`: Size of data to write to trace buffer.
- `tmo`: Timeout for operation (in us). Use ESP_APPTRACE_TMO_INFINITE to wait indefinitely.

int esp_apptrace_vprintf_to(*esp_apptrace_dest_t* *dest*, uint32_t *tmo*, const char **fmt*, va_list *ap*)

vprintf-like function to sent log messages to host via specified HW interface.

Return Number of bytes written.

Parameters

- `dest`: Indicates HW interface to send data.
- `tmo`: Timeout for operation (in us). Use ESP_APPTRACE_TMO_INFINITE to wait indefinitely.
- `fmt`: Address of format string.
- `ap`: List of arguments.

int **esp_apptrace_vprintf**(**const** char *_fmt_, va_list _ap_)

vprintf-like function to sent log messages to host.

Return Number of bytes written.

Parameters

- `fmt`: Address of format string.
- `ap`: List of arguments.

esp_err_t **esp_apptrace_flush**(*esp_apptrace_dest_t* _dest_, uint32_t _tmo_)

Flushes remaining data in trace buffer to host.

Return ESP_OK on success, otherwise see esp_err_t

Parameters

- `dest`: Indicates HW interface to flush data on.
- `tmo`: Timeout for operation (in us). Use ESP_APPTRACE_TMO_INFINITE to wait indefinitely.

esp_err_t **esp_apptrace_flush_nolock**(*esp_apptrace_dest_t* _dest_, uint32_t _min_sz_, uint32_t _tmo_)

Flushes remaining data in trace buffer to host without locking internal data. This is special version of esp_apptrace_flush which should be called from panic handler.

Return ESP_OK on success, otherwise see esp_err_t

Parameters

- `dest`: Indicates HW interface to flush data on.
- `min_sz`: Threshold for flushing data. If current filling level is above this value, data will be flushed. TRAX destinations only.
- `tmo`: Timeout for operation (in us). Use ESP_APPTRACE_TMO_INFINITE to wait indefinitely.

esp_err_t **esp_apptrace_read**(*esp_apptrace_dest_t dest*, void **data*, uint32_t **size*, uint32_t *tmo*)
Reads host data from trace buffer.

Return ESP_OK on success, otherwise see esp_err_t

Parameters

- `dest`: Indicates HW interface to read the data on.
- `data`: Address of buffer to put data from trace buffer.
- `size`: Pointer to store size of read data. Before call to this function pointed memory must hold requested size of data
- `tmo`: Timeout for operation (in us). Use ESP_APPTRACE_TMO_INFINITE to wait indefinitely.

uint8_t *__esp_apptrace_down_buffer_get__(*esp_apptrace_dest_t dest*, uint32_t **size*, uint32_t *tmo*)
Retrieves incoming data buffer if any. After data in buffer are processed esp_apptrace_down_buffer_put must be called to indicate it.

Return non-NULL on success, otherwise NULL.

Parameters

- `dest`: Indicates HW interface to receive data.
- `size`: Address to store size of available data in down buffer. Must be initialized with requested value.
- `tmo`: Timeout for operation (in us). Use ESP_APPTRACE_TMO_INFINITE to wait indefinitely.

esp_err_t **esp_apptrace_down_buffer_put**(*esp_apptrace_dest_t dest*, uint8_t **ptr*, uint32_t *tmo*)
Indicates that the data in down buffer are processed. This function is a counterpart of and must be preceeded by esp_apptrace_down_buffer_get.

Return ESP_OK on success, otherwise see esp_err_t

Parameters

- `dest`: Indicates HW interface to receive data. Should be identical to the same parameter in call to esp_apptrace_down_buffer_get.
- `ptr`: Address of trace buffer to release. Should be the value returned by call to esp_apptrace_down_buffer_get.
- `tmo`: Timeout for operation (in us). Use ESP_APPTRACE_TMO_INFINITE to wait indefinitely.

bool **esp_apptrace_host_is_connected**(*esp_apptrace_dest_t dest*)

Checks whether host is connected.

Return true if host is connected, otherwise false

Parameters

- `dest`: Indicates HW interface to use.

void ***esp_apptrace_fopen**(*esp_apptrace_dest_t dest*, **const** char ***path*, **const** char ***mode*)

Opens file on host. This function has the same semantic as 'fopen' except for the first argument.

Return non zero file handle on success, otherwise 0

Parameters

- `dest`: Indicates HW interface to use.
- `path`: Path to file.
- `mode`: Mode string. See fopen for details.

int **esp_apptrace_fclose**(*esp_apptrace_dest_t dest*, void ***stream*)

Closes file on host. This function has the same semantic as 'fclose' except for the first argument.

Return Zero on success, otherwise non-zero. See fclose for details.

Parameters

- `dest`: Indicates HW interface to use.
- `stream`: File handle returned by esp_apptrace_fopen.

size_t **esp_apptrace_fwrite**(*esp_apptrace_dest_t dest*, **const** void ***ptr*, size_t *size*, size_t *nmemb*, void ***stream*)

Writes to file on host. This function has the same semantic as 'fwrite' except for the first argument.

Return Number of written items. See fwrite for details.

Parameters

- `dest`: Indicates HW interface to use.
- `ptr`: Address of data to write.
- `size`: Size of an item.
- `nmemb`: Number of items to write.
- `stream`: File handle returned by esp_apptrace_fopen.

size_t **esp_apptrace_fread**(*esp_apptrace_dest_t* *dest*, void **ptr*, size_t *size*, size_t *nmemb*, void **stream*)

Read file on host. This function has the same semantic as 'fread' except for the first argument.

Return Number of read items. See fread for details.

Parameters

- `dest`: Indicates HW interface to use.
- `ptr`: Address to store read data.
- `size`: Size of an item.
- `nmemb`: Number of items to read.
- `stream`: File handle returned by esp_apptrace_fopen.

int **esp_apptrace_fseek**(*esp_apptrace_dest_t* *dest*, void **stream*, long *offset*, int *whence*)

Set position indicator in file on host. This function has the same semantic as 'fseek' except for the first argument.

Return Zero on success, otherwise non-zero. See fseek for details.

Parameters

- `dest`: Indicates HW interface to use.
- `stream`: File handle returned by esp_apptrace_fopen.
- `offset`: Offset. See fseek for details.
- `whence`: Position in file. See fseek for details.

int **esp_apptrace_ftell**(*esp_apptrace_dest_t* *dest*, void **stream*)

Get current position indicator for file on host. This function has the same semantic as 'ftell' except for the first argument.

Return Current position in file. See ftell for details.

Parameters

- `dest`: Indicates HW interface to use.
- `stream`: File handle returned by esp_apptrace_fopen.

int **esp_apptrace_fstop**(*esp_apptrace_dest_t* *dest*)

Indicates to the host that all file operations are completed. This function should be called after all file operations are finished and indicate to the host that it can perform cleanup operations (close open files etc.).

Return ESP_OK on success, otherwise see esp_err_t

Parameters

- `dest`: Indicates HW interface to use.

void `esp_gcov_dump`(void)

Triggers gcov info dump. This function waits for the host to connect to target before dumping data.

Enumerations

`enum esp_apptrace_dest_t`

Application trace data destinations bits.

Values:

`ESP_APPTRACE_DEST_TRAX` = 0x1

JTAG destination.

`ESP_APPTRACE_DEST_UART0` = 0x2

UART destination.

3.7.14 Power Management

Overview

Power management algorithm included in ESP-IDF can adjust APB frequency, CPU frequency, and put the chip into light sleep mode to run the application at smallest possible power consumption, given the requirements of application components.

Application components can express their requirements by creating and acquiring power management locks.

For instance, a driver for a peripheral clocked from APB can request the APB frequency to be set to 80 MHz, for the duration while the peripheral is used. Another example is that the RTOS will request the CPU to run at the highest configured frequency while there are tasks ready to run. Yet another example is a peripheral driver which needs interrupts to be enabled. Such driver can request light sleep to be disabled.

Naturally, requesting higher APB or CPU frequency or disabling light sleep causes higher current consumption. Components should try to limit usage of power management locks to the shortest amount of time possible.

Configuration

Power management can be enabled at compile time, using *CONFIG_PM_ENABLE* option.

Enabling power management features comes at the cost of increased interrupt latency. Extra latency depends on a number of factors, among which are CPU frequency, single/dual core mode, whether frequency switch needs to be performed or not. Minimal extra latency is 0.2us (when CPU frequency is 240MHz, and frequency

scaling is not enabled), maximum extra latency is 40us (when frequency scaling is enabled, and a switch from 40MHz to 80MHz is performed on interrupt entry).

Dynamic frequency scaling (DFS) and automatic light sleep can be enabled in the application by calling *esp_pm_configure()* function. Its argument is a structure defining frequency scaling settings, cpp:class:*esp_pm_config_esp32_t*. In this structure, 3 fields need to be initialized:

- `max_freq_mhz` - Maximal CPU frequency, in MHZ (i.e. frequency used when `ESP_PM_CPU_FREQ_MAX` lock is taken). This will usually be set to *CONFIG_ESP32_DEFAULT_CPU_FREQ_MHZ*.
- `min_freq_mhz` —Minimal CPU frequency, in MHz (i.e. frequency used when only `ESP_PM_APB_FREQ_MAX` locks are taken). This can be set to XTAL frequency, or XTAL frequency divided by integer. Note that 10MHz is the lowest frequency at which the default REF_TICK clock of 1MHz can be generated.
- `light_sleep_enable` —Whether system should automatically enter light sleep when no locks are taken (`true`/`false`).

注解: Automatic light sleep is based on FreeRTOS Tickless Idle functionality. *esp_pm_configure()* will return an *ESP_ERR_NOT_SUPPORTED* error if *CONFIG_FREERTOS_USE_TICKLESS_IDLE* option is not enabled in menuconfig, but automatic light sleep is requested.

注解: In light sleep, peripherals are clock gated, and interrupts (from GPIOs and internal peripherals) will not be generated. Wakeup source described in *Sleep Modes* documentation can be used to wake from light sleep state. For example, EXT0 and EXT1 wakeup source can be used to wake up from a GPIO.

Alternatively, *CONFIG_PM_DFS_INIT_AUTO* option can be enabled in menuconfig. If enabled, maximal CPU frequency is determined by *CONFIG_ESP32_DEFAULT_CPU_FREQ_MHZ* setting, and minimal CPU frequency is set to the XTAL frequency.

Power Management Locks

As mentioned in the overview, applications can acquire/release locks to control the power management algorithm. When application takes a lock, power management algorithm operation is restricted in a way described below, for each lock. When the lock is released, such restriction is removed.

Different parts of the application can take the same lock. In this case, the lock must be released the same number of times as it was acquired, in order for power managment algorithm to resume.

In ESP32, three types of locks are supported:

`ESP_PM_CPU_FREQ_MAX` Requests CPU frequency to be at the maximal value set via *esp_pm_configure()*. For ESP32, this value can be set to 80, 160, or 240MHz.

`ESP_PM_APB_FREQ_MAX` Requests APB frequency to be at the maximal supported value. For ESP32, this is 80 MHz.

`ESP_PM_NO_LIGHT_SLEEP` Prevents automatic light sleep from being used.

Power Management Algorithm for the ESP32

When dynamic frequency scaling is enabled, CPU frequency will be switched as follows:

- If maximal CPU frequency (set using *esp_pm_configure()* or *CONFIG_ESP32_DEFAULT_CPU_FREQ_MHZ*) is 240 MHz:
  1. When `ESP_PM_CPU_FREQ_MAX` or `ESP_PM_APB_FREQ_MAX` locks are acquired, CPU frequency will be 240 MHz, and APB frequency will be 80 MHz.
  2. Otherwise, frequency will be switched to the minimal value set using *esp_pm_configure()*.
- If maximal CPU frequency is 160 MHz:
  1. When `ESP_PM_CPU_FREQ_MAX` is acquired, CPU frequency is set to 160 MHz, and APB frequency to 80 MHz.
  2. When `ESP_PM_CPU_FREQ_MAX` is not acquired, but `ESP_PM_APB_FREQ_MAX` is, CPU and APB frequencies are set to 80 MHz.
  3. Otherwise, frequency will be switched to the minimal value set using *esp_pm_configure()*.
- If maximal CPU frequency is 80 MHz:
  1. When `ESP_PM_CPU_FREQ_MAX` or `ESP_PM_APB_FREQ_MAX` locks are acquired, CPU and APB frequencies will be 80 MHz.
  2. Otherwise, frequency will be switched to the minimal value set using *esp_pm_configure()*.
- When none of the locks are aquired, and light sleep is enabled in a call to *esp_pm_configure()*, the system will go into light sleep mode. The duration of light sleep will be determined by:
  - FreeRTOS tasks blocked with finite timeouts
  - Timers registered with *High resolution timer* APIs

  Light sleep will duration will be chosen to wake up before the nearest event (task being unblocked, or timer elapses).

Dynamic Frequency Scaling and Peripheral Drivers

When DFS is enabled, APB frequency can be changed several times within a single RTOS tick. Some peripherals can work normally even when APB frequency changes; some can not.

The following peripherals can work even when APB frequency is changing:

- UART: if REF_TICK is used as clock source (see *use_ref_tick* member of *uart_config_t*).

- LEDC: if REF_TICK is used as clock source (see *ledc_timer_config()* function).
- RMT: if REF_TICK is used as clock source. Currently the driver does not support REF_TICK, but it can be enabled by clearing `RMT_REF_ALWAYS_ON_CHx` bit for the respective channel.

Currently, the following peripheral drivers are aware of DFS and will use `ESP_PM_APB_FREQ_MAX` lock for the duration of the transaction:

- SPI master
- I2C
- I2S (If APLL clock is used then it will use `ESP_PM_NO_LIGHT_SLEEP` lock)
- SDMMC

The following drivers will hold `ESP_PM_APB_FREQ_MAX` lock while the driver is enabled:

- SPI slave —between calls to *spi_slave_initialize()* and *spi_slave_free()*.
- Ethernet —between calls to *esp_eth_enable()* and *esp_eth_disable()*.
- WiFi —between calls to *esp_wifi_start()* and *esp_wifi_stop()*. If modem sleep is enabled, lock will be released for thte periods of time when radio is disabled.
- Bluetooth —between calls to *esp_bt_controller_enable()* and *esp_bt_controller_disable()*.
- CAN - between calls to *can_driver_install()* and *can_driver_uninstall()*

The following peripheral drivers are not aware of DFS yet. Applications need to acquire/release locks when necessary:

- MCPWM
- PCNT
- Sigma-delta
- Timer group

API Reference

Header File

- esp32/include/esp_pm.h

Functions

esp_err_t **esp_pm_configure**(**const** void ***config*)

Set implementation-specific power management configuration.

Return

- ESP_OK on success
- ESP_ERR_INVALID_ARG if the configuration values are not correct
- ESP_ERR_NOT_SUPPORTED if certain combination of values is not supported, or if CONFIG_PM_ENABLE is not enabled in sdkconfig

Parameters

- `config`: pointer to implementation-specific configuration structure (e.g. esp_pm_config_esp32)

esp_err_t **esp_pm_lock_create**(*esp_pm_lock_type_t lock_type*, int *arg*, **const** char **name*, *esp_pm_lock_handle_t* **out_handle*)

Initialize a lock handle for certain power management parameter.

When lock is created, initially it is not taken. Call esp_pm_lock_acquire to take the lock.

This function must not be called from an ISR.

Return

- ESP_OK on success
- ESP_ERR_NO_MEM if the lock structure can not be allocated
- ESP_ERR_INVALID_ARG if out_handle is NULL or type argument is not valid
- ESP_ERR_NOT_SUPPORTED if CONFIG_PM_ENABLE is not enabled in sdkconfig

Parameters

- `lock_type`: Power management constraint which the lock should control
- `arg`: argument, value depends on lock_type, see esp_pm_lock_type_t
- `name`: arbitrary string identifying the lock (e.g. "wifi" or "spi"). Used by the esp_pm_dump_locks function to list existing locks. May be set to NULL. If not set to NULL, must point to a string which is valid for the lifetime of the lock.
- `out_handle`: handle returned from this function. Use this handle when calling esp_pm_lock_delete, esp_pm_lock_acquire, esp_pm_lock_release. Must not be NULL.

esp_err_t **esp_pm_lock_acquire**(*esp_pm_lock_handle_t handle*)

Take a power management lock.

Once the lock is taken, power management algorithm will not switch to the mode specified in a call to esp_pm_lock_create, or any of the lower power modes (higher numeric values of 'mode').

The lock is recursive, in the sense that if esp_pm_lock_acquire is called a number of times, esp_pm_lock_release has to be called the same number of times in order to release the lock.

This function may be called from an ISR.

This function is not thread-safe w.r.t. calls to other esp_pm_lock_* functions for the same handle.

Return

- ESP_OK on success
- ESP_ERR_INVALID_ARG if the handle is invalid
- ESP_ERR_NOT_SUPPORTED if CONFIG_PM_ENABLE is not enabled in sdkconfig

Parameters

- `handle`: handle obtained from esp_pm_lock_create function

esp_err_t **esp_pm_lock_release**(*esp_pm_lock_handle_t handle*)

Release the lock taken using esp_pm_lock_acquire.

Call to this functions removes power management restrictions placed when taking the lock.

Locks are recursive, so if esp_pm_lock_acquire is called a number of times, esp_pm_lock_release has to be called the same number of times in order to actually release the lock.

This function may be called from an ISR.

This function is not thread-safe w.r.t. calls to other esp_pm_lock_* functions for the same handle.

Return

- ESP_OK on success
- ESP_ERR_INVALID_ARG if the handle is invalid
- ESP_ERR_INVALID_STATE if lock is not acquired
- ESP_ERR_NOT_SUPPORTED if CONFIG_PM_ENABLE is not enabled in sdkconfig

Parameters

- `handle`: handle obtained from esp_pm_lock_create function

esp_err_t **esp_pm_lock_delete**(*esp_pm_lock_handle_t handle*)

Delete a lock created using esp_pm_lock.

The lock must be released before calling this function.

This function must not be called from an ISR.

Return

- ESP_OK on success
- ESP_ERR_INVALID_ARG if the handle argument is NULL
- ESP_ERR_INVALID_STATE if the lock is still acquired
- ESP_ERR_NOT_SUPPORTED if CONFIG_PM_ENABLE is not enabled in sdkconfig

Parameters

- `handle`: handle obtained from esp_pm_lock_create function

esp_err_t **esp_pm_dump_locks**(FILE *stream)

Dump the list of all locks to stderr

This function dumps debugging information about locks created using esp_pm_lock_create to an output stream.

This function must not be called from an ISR. If esp_pm_lock_acquire/release are called while this function is running, inconsistent results may be reported.

Return

- ESP_OK on success
- ESP_ERR_NOT_SUPPORTED if CONFIG_PM_ENABLE is not enabled in sdkconfig

Parameters

- `stream`: stream to print information to; use stdout or stderr to print to the console; use fmemopen/open_memstream to print to a string buffer.

Type Definitions

typedef struct esp_pm_lock ***esp_pm_lock_handle_t**

Opaque handle to the power management lock.

Enumerations

enum esp_pm_lock_type_t

Power management constraints.

Values:

ESP_PM_CPU_FREQ_MAX

Require CPU frequency to be at the maximum value set via esp_pm_configure. Argument is unused and should be set to 0.

ESP_PM_APB_FREQ_MAX

Require APB frequency to be at the maximum value supported by the chip. Argument is unused and should be set to 0.

ESP_PM_NO_LIGHT_SLEEP

Prevent the system from going into light sleep. Argument is unused and should be set to 0.

Header File

- esp32/include/esp32/pm.h

Structures

struct esp_pm_config_esp32_t

Power management config for ESP32.

Pass a pointer to this structure as an argument to esp_pm_configure function.

Public Members

rtc_cpu_freq_t **max_cpu_freq**

Maximum CPU frequency to use. Deprecated, use max_freq_mhz instead.

int **max_freq_mhz**

Maximum CPU frequency, in MHz

rtc_cpu_freq_t **min_cpu_freq**

Minimum CPU frequency to use when no frequency locks are taken. Deprecated, use min_freq_mhz instead.

int **min_freq_mhz**

Minimum CPU frequency to use when no locks are taken, in MHz

bool **light_sleep_enable**

Enter light sleep when no locks are taken

3.7.15 Sleep Modes

Overview

ESP32 is capable of light sleep and deep sleep power saving modes.

In light sleep mode, digital peripherals, most of the RAM, and CPUs are clock-gated, and supply voltage is reduced. Upon exit from light sleep, peripherals and CPUs resume operation, their internal state is preserved.

In deep sleep mode, CPUs, most of the RAM, and all the digital peripherals which are clocked from APB_CLK are powered off. The only parts of the chip which can still be powered on are: RTC controller, RTC peripherals (including ULP coprocessor), and RTC memories (slow and fast).

Wakeup from deep and light sleep modes can be done using several sources. These sources can be combined, in this case the chip will wake up when any one of the sources is triggered. Wakeup sources can be enabled using `esp_sleep_enable_X_wakeup` APIs and can be disabled using *esp_sleep_disable_wakeup_source()*

API. Next section describes these APIs in detail. Wakeup sources can be configured at any moment before entering light or deep sleep mode.

Additionally, the application can force specific powerdown modes for the RTC peripherals and RTC memories using *esp_sleep_pd_config()* API.

Once wakeup sources are configured, application can enter sleep mode using *esp_light_sleep_start()* or *esp_deep_sleep_start()* APIs. At this point the hardware will be configured according to the requested wakeup sources, and RTC controller will either power down or power off the CPUs and digital peripherals.

WiFi/BT and sleep modes

In deep sleep and light sleep modes, wireless peripherals are powered down. Before entering deep sleep or light sleep modes, applications must disable WiFi and BT using appropriate calls (*esp_bluedroid_disable()*, *esp_bt_controller_disable()*, *esp_wifi_stop()*). WiFi and BT connections will not be maintained in deep sleep or light sleep, even if these functions are not called.

If WiFi connection needs to be maintained, enable WiFi modem sleep, and enable automatic light sleep feature (see *Power Management APIs*). This will allow the system to wake up from sleep automatically when required by WiFi driver, thereby maintaining connection to the AP.

Wakeup sources

Timer

RTC controller has a built in timer which can be used to wake up the chip after a predefined amount of time. Time is specified at microsecond precision, but the actual resolution depends on the clock source selected for RTC SLOW_CLK. See chapter "Reset and Clock" of the ESP32 Technical Reference Manual for details about RTC clock options.

This wakeup mode doesn't require RTC peripherals or RTC memories to be powered on during sleep.

esp_sleep_enable_timer_wakeup() function can be used to enable deep sleep wakeup using a timer.

Touch pad

RTC IO module contains logic to trigger wakeup when a touch sensor interrupt occurs. You need to configure the touch pad interrupt before the chip starts deep sleep.

Revisions 0 and 1 of the ESP32 only support this wakeup mode when RTC peripherals are not forced to be powered on (i.e. ESP_PD_DOMAIN_RTC_PERIPH should be set to ESP_PD_OPTION_AUTO).

esp_sleep_enable_touchpad_wakeup() function can be used to enable this wakeup source.

External wakeup (ext0)

RTC IO module contains logic to trigger wakeup when one of RTC GPIOs is set to a predefined logic level. RTC IO is part of RTC peripherals power domain, so RTC peripherals will be kept powered on during deep sleep if this wakeup source is requested.

Because RTC IO module is enabled in this mode, internal pullup or pulldown resistors can also be used. They need to be configured by the application using *rtc_gpio_pullup_en()* and *rtc_gpio_pulldown_en()* functions, before calling `esp_sleep_start()`.

In revisions 0 and 1 of the ESP32, this wakeup source is incompatible with ULP and touch wakeup sources.

esp_sleep_enable_ext0_wakeup() function can be used to enable this wakeup source.

警告: After wake up from sleep, IO pad used for wakeup will be configured as RTC IO. Before using this pad as digital GPIO, reconfigure it using `rtc_gpio_deinit(gpio_num)` function.

External wakeup (ext1)

RTC controller contains logic to trigger wakeup using multiple RTC GPIOs. One of the two logic functions can be used to trigger wakeup:

- wake up if any of the selected pins is high (`ESP_EXT1_WAKEUP_ANY_HIGH`)
- wake up if all the selected pins are low (`ESP_EXT1_WAKEUP_ALL_LOW`)

This wakeup source is implemented by the RTC controller. As such, RTC peripherals and RTC memories can be powered down in this mode. However, if RTC peripherals are powered down, internal pullup and pulldown resistors will be disabled. To use internal pullup or pulldown resistors, request RTC peripherals power domain to be kept on during sleep, and configure pullup/pulldown resistors using `rtc_gpio_` functions, before entering sleep:

```
esp_sleep_pd_config(ESP_PD_DOMAIN_RTC_PERIPH, ESP_PD_OPTION_ON);
gpio_pullup_dis(gpio_num);
gpio_pulldown_en(gpio_num);
```

警告: After wake up from sleep, IO pad(s) used for wakeup will be configured as RTC IO. Before using these pads as digital GPIOs, reconfigure them using `rtc_gpio_deinit(gpio_num)` function.

esp_sleep_enable_ext1_wakeup() function can be used to enable this wakeup source.

ULP coprocessor wakeup

ULP coprocessor can run while the chip is in sleep mode, and may be used to poll sensors, monitor ADC or touch sensor values, and wake up the chip when a specific event is detected. ULP coprocessor is part of RTC peripherals power domain, and it runs the program stored in RTC slow memory. RTC slow memory will be powered on during sleep if this wakeup mode is requested. RTC peripherals will be automatically powered on before ULP coprocessor starts running the program; once the program stops running, RTC peripherals are automatically powered down again.

Revisions 0 and 1 of the ESP32 only support this wakeup mode when RTC peripherals are not forced to be powered on (i.e. ESP_PD_DOMAIN_RTC_PERIPH should be set to ESP_PD_OPTION_AUTO).

esp_sleep_enable_ulp_wakeup() function can be used to enable this wakeup source.

GPIO wakeup (light sleep only)

In addition to EXT0 and EXT1 wakeup sources described above, one more method of wakeup from external inputs is available in light sleep mode. With this wakeup source, each pin can be individually configured to trigger wakeup on high or low level using *gpio_wakeup_enable()* function. Unlike EXT0 and EXT1 wakeup sources, which can only be used with RTC IOs, this wakeup source can be used with any IO (RTC or digital).

esp_sleep_enable_gpio_wakeup() function can be used to enable this wakeup source.

UART wakeup (light sleep only)

When ESP32 receives UART input from external devices, it is often required to wake up the chip when input data is available. UART peripheral contains a feature which allows waking up the chip from light sleep when a certain number of positive edges on RX pin are seen. This number of positive edges can be set using *uart_set_wakeup_threshold()* function. Note that the character which triggers wakeup (and any characters before it) will not be received by the UART after wakeup. This means that the external device typically needs to send an extra character to the ESP32 to trigger wakeup, before sending the data.

esp_sleep_enable_uart_wakeup() function can be used to enable this wakeup source.

Power-down of RTC peripherals and memories

By default, *esp_deep_sleep_start()* and *esp_light_sleep_start()* functions will power down all RTC power domains which are not needed by the enabled wakeup sources. To override this behaviour, *esp_sleep_pd_config()* function is provided.

Note: in revision 0 of the ESP32, RTC fast memory will always be kept enabled in deep sleep, so that the deep sleep stub can run after reset. This can be overridden, if the application doesn' t need clean reset behaviour after deep sleep.

If some variables in the program are placed into RTC slow memory (for example, using `RTC_DATA_ATTR` attribute), RTC slow memory will be kept powered on by default. This can be overridden using *esp_sleep_pd_config()* function, if desired.

Entering light sleep

esp_light_sleep_start() function can be used to enter light sleep once wakeup sources are configured. It is also possible to go into light sleep with no wakeup sources configured, in this case the chip will be in light sleep mode indefinitely, until external reset is applied.

Entering deep sleep

esp_deep_sleep_start() function can be used to enter deep sleep once wakeup sources are configured. It is also possible to go into deep sleep with no wakeup sources configured, in this case the chip will be in deep sleep mode indefinitely, until external reset is applied.

Configuring IOs

Some ESP32 IOs have internal pullups or pulldowns, which are enabled by default. If an external circuit drives this pin in deep sleep mode, current consumption may increase due to current flowing through these pullups and pulldowns.

To isolate a pin, preventing extra current draw, call *rtc_gpio_isolate()* function.

For example, on ESP32-WROVER module, GPIO12 is pulled up externally. GPIO12 also has an internal pulldown in the ESP32 chip. This means that in deep sleep, some current will flow through these external and internal resistors, increasing deep sleep current above the minimal possible value. Add the following code before *esp_deep_sleep_start()* to remove this extra current:

```
rtc_gpio_isolate(GPIO_NUM_12);
```

UART output handling

Before entering sleep mode, *esp_deep_sleep_start()* will flush the contents of UART FIFOs.

When entering light sleep mode using *esp_light_sleep_start()*, UART FIFOs will not be flushed. Instead, UART output will be suspended, and remaining characters in the FIFO will be sent out after wakeup from light sleep.

Checking sleep wakeup cause

esp_sleep_get_wakeup_cause() function can be used to check which wakeup source has triggered wakeup from sleep mode.

For touch pad and ext1 wakeup sources, it is possible to identify pin or touch pad which has caused wakeup using *esp_sleep_get_touchpad_wakeup_status()* and *esp_sleep_get_ext1_wakeup_status()* functions.

Disable sleep wakeup source

Previously configured wakeup source can be disabled later using *esp_sleep_disable_wakeup_source()* API. This function deactivates trigger for the given wakeup source. Additionally it can disable all triggers if the argument is `ESP_SLEEP_WAKEUP_ALL`.

Application Example

Implementation of basic functionality of deep sleep is shown in protocols/sntp example, where ESP module is periodically waken up to retrieve time from NTP server.

More extensive example in system/deep_sleep illustrates usage of various deep sleep wakeup triggers and ULP coprocessor programming.

API Reference

Header File

- esp32/include/esp_sleep.h

Functions

esp_err_t **esp_sleep_disable_wakeup_source**(*esp_sleep_source_t source*)

Disable wakeup source.

This function is used to deactivate wake up trigger for source defined as parameter of the function.

See docs/sleep-modes.rst for details.

Note This function does not modify wake up configuration in RTC. It will be performed in esp_sleep_start function.

Return

- ESP_OK on success
- ESP_ERR_INVALID_STATE if trigger was not active

Parameters

- `source`: - number of source to disable of type esp_sleep_source_t

esp_err_t **esp_sleep_enable_ulp_wakeup**()

Enable wakeup by ULP coprocessor.

Note ULP wakeup source cannot be used when RTC_PERIPH power domain is forced to be powered on (ESP_PD_OPTION_ON) or when ext0 wakeup source is used.

Return

- ESP_OK on success
- ESP_ERR_NOT_SUPPORTED if additional current by touch (CONFIG_ESP32_RTC_EXTERNAL_CRYSTAL_ADDITIONAL_CURRENT) is enabled.
- ESP_ERR_INVALID_STATE if ULP co-processor is not enabled or if wakeup triggers conflict

esp_err_t **esp_sleep_enable_timer_wakeup**(uint64_t *time_in_us*)

Enable wakeup by timer.

Return

- ESP_OK on success
- ESP_ERR_INVALID_ARG if value is out of range (TBD)

Parameters

- `time_in_us`: time before wakeup, in microseconds

esp_err_t **esp_sleep_enable_touchpad_wakeup**()

Enable wakeup by touch sensor.

Note Touch wakeup source cannot be used when RTC_PERIPH power domain is forced to be powered on (ESP_PD_OPTION_ON) or when ext0 wakeup source is used.

Note The FSM mode of the touch button should be configured as the timer trigger mode.

Return

- ESP_OK on success
- ESP_ERR_NOT_SUPPORTED if additional current by touch (CONFIG_ESP32_RTC_EXTERNAL_CRYSTAL_ADDITIONAL_CURRENT) is enabled.
- ESP_ERR_INVALID_STATE if wakeup triggers conflict

touch_pad_t **esp_sleep_get_touchpad_wakeup_status**()

Get the touch pad which caused wakeup.

If wakeup was caused by another source, this function will return TOUCH_PAD_MAX;

Return touch pad which caused wakeup

esp_err_t **esp_sleep_enable_ext0_wakeup**(*gpio_num_t gpio_num*, int *level*)

Enable wakeup using a pin.

This function uses external wakeup feature of RTC_IO peripheral. It will work only if RTC peripherals are kept on during sleep.

This feature can monitor any pin which is an RTC IO. Once the pin transitions into the state given by level argument, the chip will be woken up.

Note This function does not modify pin configuration. The pin is configured in esp_sleep_start, immediately before entering sleep mode.

Note ext0 wakeup source cannot be used together with touch or ULP wakeup sources.

Return

- ESP_OK on success
- ESP_ERR_INVALID_ARG if the selected GPIO is not an RTC GPIO, or the mode is invalid
- ESP_ERR_INVALID_STATE if wakeup triggers conflict

Parameters

- `gpio_num`: GPIO number used as wakeup source. Only GPIOs which are have RTC functionality can be used: 0,2,4,12-15,25-27,32-39.
- `level`: input level which will trigger wakeup (0=low, 1=high)

esp_err_t **esp_sleep_enable_ext1_wakeup**(uint64_t *mask*, *esp_sleep_ext1_wakeup_mode_t mode*)

Enable wakeup using multiple pins.

This function uses external wakeup feature of RTC controller. It will work even if RTC peripherals are shut down during sleep.

This feature can monitor any number of pins which are in RTC IOs. Once any of the selected pins goes into the state given by mode argument, the chip will be woken up.

Note This function does not modify pin configuration. The pins are configured in esp_sleep_start, immediately before entering sleep mode.

Note internal pullups and pulldowns don’ t work when RTC peripherals are shut down. In this case, external resistors need to be added. Alternatively, RTC peripherals (and pullups/pulldowns) may be kept enabled using esp_sleep_pd_config function.

Return

- ESP_OK on success
- ESP_ERR_INVALID_ARG if any of the selected GPIOs is not an RTC GPIO, or mode is invalid

Parameters

- `mask`: bit mask of GPIO numbers which will cause wakeup. Only GPIOs which are have RTC functionality can be used in this bit map: 0,2,4,12-15,25-27,32-39.
- `mode`: select logic function used to determine wakeup condition:
  - ESP_EXT1_WAKEUP_ALL_LOW: wake up when all selected GPIOs are low
  - ESP_EXT1_WAKEUP_ANY_HIGH: wake up when any of the selected GPIOs is high

esp_err_t **esp_sleep_enable_gpio_wakeup()**

Enable wakeup from light sleep using GPIOs.

Each GPIO supports wakeup function, which can be triggered on either low level or high level. Unlike EXT0 and EXT1 wakeup sources, this method can be used both for all IOs: RTC IOs and digital IOs. It can only be used to wakeup from light sleep though.

To enable wakeup, first call gpio_wakeup_enable, specifying gpio number and wakeup level, for each GPIO which is used for wakeup. Then call this function to enable wakeup feature.

Note GPIO wakeup source cannot be used together with touch or ULP wakeup sources.

Return

- ESP_OK on success
- ESP_ERR_INVALID_STATE if wakeup triggers conflict

esp_err_t **esp_sleep_enable_uart_wakeup**(int *uart_num*)

Enable wakeup from light sleep using UART.

Use uart_set_wakeup_threshold function to configure UART wakeup threshold.

Wakeup from light sleep takes some time, so not every character sent to the UART can be received by the application.

Note ESP32 does not support wakeup from UART2.

Return

- ESP_OK on success
- ESP_ERR_INVALID_ARG if wakeup from given UART is not supported

Parameters

- `uart_num`: UART port to wake up from

uint64_t **esp_sleep_get_ext1_wakeup_status()**

Get the bit mask of GPIOs which caused wakeup (ext1)

If wakeup was caused by another source, this function will return 0.

Return bit mask, if GPIOn caused wakeup, BIT(n) will be set

esp_err_t **esp_sleep_pd_config**(*esp_sleep_pd_domain_t domain*, *esp_sleep_pd_option_t option*)

Set power down mode for an RTC power domain in sleep mode.

If not set set using this API, all power domains default to ESP_PD_OPTION_AUTO.

Return

- ESP_OK on success
- ESP_ERR_INVALID_ARG if either of the arguments is out of range

Parameters

- `domain`: power domain to configure
- `option`: power down option (ESP_PD_OPTION_OFF, ESP_PD_OPTION_ON, or ESP_PD_OPTION_AUTO)

void **esp_deep_sleep_start**()

Enter deep sleep with the configured wakeup options.

This function does not return.

esp_err_t **esp_light_sleep_start**()

Enter light sleep with the configured wakeup options.

Return

- ESP_OK on success (returned after wakeup)
- ESP_ERR_INVALID_STATE if WiFi or BT is not stopped

void **esp_deep_sleep**(uint64_t *time_in_us*)

Enter deep-sleep mode.

The device will automatically wake up after the deep-sleep time Upon waking up, the device calls deep sleep wake stub, and then proceeds to load application.

Call to this function is equivalent to a call to esp_deep_sleep_enable_timer_wakeup followed by a call to esp_deep_sleep_start.

esp_deep_sleep does not shut down WiFi, BT, and higher level protocol connections gracefully. Make sure relevant WiFi and BT stack functions are called to close any connections and deinitialize the peripherals. These include:

- esp_bluedroid_disable
- esp_bt_controller_disable
- esp_wifi_stop

This function does not return.

Parameters

- `time_in_us`: deep-sleep time, unit: microsecond

void **system_deep_sleep**(uint64_t *time_in_us*)

Enter deep-sleep mode.

Function has been renamed to esp_deep_sleep. This name is deprecated and will be removed in a future version.

Parameters

- `time_in_us`: deep-sleep time, unit: microsecond

esp_sleep_wakeup_cause_t **esp_sleep_get_wakeup_cause**()

Get the wakeup source which caused wakeup from sleep.

Return cause of wake up from last sleep (deep sleep or light sleep)

void **esp_wake_deep_sleep**(void)

Default stub to run on wake from deep sleep.

Allows for executing code immediately on wake from sleep, before the software bootloader or ESP-IDF app has started up.

This function is weak-linked, so you can implement your own version to run code immediately when the chip wakes from sleep.

See docs/deep-sleep-stub.rst for details.

void **esp_set_deep_sleep_wake_stub**(*esp_deep_sleep_wake_stub_fn_t new_stub*)

Install a new stub at runtime to run on wake from deep sleep.

If implementing esp_wake_deep_sleep() then it is not necessary to call this function.

However, it is possible to call this function to substitute a different deep sleep stub. Any function used as a deep sleep stub must be marked RTC_IRAM_ATTR, and must obey the same rules given for esp_wake_deep_sleep().

esp_deep_sleep_wake_stub_fn_t **esp_get_deep_sleep_wake_stub**(void)

Get current wake from deep sleep stub.

Return Return current wake from deep sleep stub, or NULL if no stub is installed.

void **esp_default_wake_deep_sleep**(void)

The default esp-idf-provided esp_wake_deep_sleep() stub.

See docs/deep-sleep-stub.rst for details.

void **esp_deep_sleep_disable_rom_logging**(void)

Disable logging from the ROM code after deep sleep.

Using LSB of RTC_STORE4.

Type Definitions

typedef *esp_sleep_source_t* **esp_sleep_wakeup_cause_t**

typedef void (***esp_deep_sleep_wake_stub_fn_t**)(void)

Function type for stub to run on wake from sleep.

Enumerations

enum esp_sleep_ext1_wakeup_mode_t

Logic function used for EXT1 wakeup mode.

Values:

ESP_EXT1_WAKEUP_ALL_LOW = 0

Wake the chip when all selected GPIOs go low.

ESP_EXT1_WAKEUP_ANY_HIGH = 1

Wake the chip when any of the selected GPIOs go high.

enum esp_sleep_pd_domain_t

Power domains which can be powered down in sleep mode.

Values:

ESP_PD_DOMAIN_RTC_PERIPH

RTC IO, sensors and ULP co-processor.

ESP_PD_DOMAIN_RTC_SLOW_MEM

RTC slow memory.

ESP_PD_DOMAIN_RTC_FAST_MEM

RTC fast memory.

ESP_PD_DOMAIN_XTAL

XTAL oscillator.

ESP_PD_DOMAIN_MAX

Number of domains.

enum esp_sleep_pd_option_t

Power down options.

Values:

`ESP_PD_OPTION_OFF`
Power down the power domain in sleep mode.

`ESP_PD_OPTION_ON`
Keep power domain enabled during sleep mode.

`ESP_PD_OPTION_AUTO`
Keep power domain enabled in sleep mode, if it is needed by one of the wakeup options. Otherwise power it down.

`enum esp_sleep_source_t`
Sleep wakeup cause.

Values:

`ESP_SLEEP_WAKEUP_UNDEFINED`
In case of deep sleep, reset was not caused by exit from deep sleep.

`ESP_SLEEP_WAKEUP_ALL`
Not a wakeup cause, used to disable all wakeup sources with esp_sleep_disable_wakeup_source.

`ESP_SLEEP_WAKEUP_EXT0`
Wakeup caused by external signal using RTC_IO.

`ESP_SLEEP_WAKEUP_EXT1`
Wakeup caused by external signal using RTC_CNTL.

`ESP_SLEEP_WAKEUP_TIMER`
Wakeup caused by timer.

`ESP_SLEEP_WAKEUP_TOUCHPAD`
Wakeup caused by touchpad.

`ESP_SLEEP_WAKEUP_ULP`
Wakeup caused by ULP program.

`ESP_SLEEP_WAKEUP_GPIO`
Wakeup caused by GPIO (light sleep only)

`ESP_SLEEP_WAKEUP_UART`
Wakeup caused by UART (light sleep only)

3.7.16 Over The Air Updates (OTA)

OTA Process Overview

The OTA update mechanism allows a device to update itself based on data received while the normal firmware is running (for example, over WiFi or Bluetooth.)

OTA requires configuring the *Partition Table* of the device with at least two "OTA app slot" partitions (ie *ota_0* and *ota_1*) and an "OTA Data Partition".

The OTA operation functions write a new app firmware image to whichever OTA app slot is not currently being used for booting. Once the image is verified, the OTA Data partition is updated to specify that this image should be used for the next boot.

OTA Data Partition

An OTA data partition (type `data`, subtype `ota`) must be included in the *Partition Table* of any project which uses the OTA functions.

For factory boot settings, the OTA data partition should contain no data (all bytes erased to 0xFF). In this case the esp-idf software bootloader will boot the factory app if it is present in the the partition table. If no factory app is included in the partition table, the first available OTA slot (usually `ota_0`) is booted.

After the first OTA update, the OTA data partition is updated to specify which OTA app slot partition should be booted next.

The OTA data partition is two flash sectors (0x2000 bytes) in size, to prevent problems if there is a power failure while it is being written. Sectors are independently erased and written with matching data, and if they disagree a counter field is used to determine which sector was written more recently.

App rollback

The main purpose of the application rollback is to keep the device working after the update. This feature allows you to roll back to the previous working application in case a new application has critical errors. When the rollback process is enabled and an OTA update provides a new version of the app, one of three things can happen:

- The application works fine, *esp_ota_mark_app_valid_cancel_rollback()* marks the running application with the state `ESP_OTA_IMG_VALID`. There are no restrictions on booting this application.
- The application has critical errors and further work is not possible, a rollback to the previous application is required, *esp_ota_mark_app_invalid_rollback_and_reboot()* marks the running application with the state `ESP_OTA_IMG_INVALID` and reset. This application will not be selected by the bootloader for boot and will boot the previously working application.
- If the *CONFIG_APP_ROLLBACK_ENABLE* option is set, and occur a reset without calling either function then happend and is rolled back.

Note: The state is not written to the binary image of the application it is written to the `otadata` partition. The partition contains a `ota_seq` counter which is a pointer to the slot (ota_0, ota_1, ···) from which the application will be selected for boot.

App OTA State

States control the process of selecting a boot app:

States	Restriction of selecting a boot app in bootloader
ESP_OTA_IMG_VALID	None restriction. Will be selected.
ESP_OTA_IMG_UNDEFINED	None restriction. Will be selected.
ESP_OTA_IMG_INVALID	Will not be selected.
ESP_OTA_IMG_ABORTED	Will not be selected.
ESP_OTA_IMG_NEW	If *CONFIG_APP_ROLLBACK_ENABLE* option is set it will be selected only once. In bootloader the state immediately changes to ESP_OTA_IMG_PENDING_VERIFY.
ESP_OTA_IMG_PENDING_VERIFY	If *CONFIG_APP_ROLLBACK_ENABLE* option is set it will not be selected and the state will change to ESP_OTA_IMG_ABORTED.

If *CONFIG_APP_ROLLBACK_ENABLE* option is not enabled (by default), then the use of the following functions *esp_ota_mark_app_valid_cancel_rollback()* and *esp_ota_mark_app_invalid_rollback_and_reboot()* are optional, and ESP_OTA_IMG_NEW and ESP_OTA_IMG_PENDING_VERIFY states are not used.

An option in Kconfig *CONFIG_APP_ROLLBACK_ENABLE* allows you to track the first boot of a new application. In this case, the application must confirm its operability by calling *esp_ota_mark_app_valid_cancel_rollback()* function, otherwise the application will be rolled back upon reboot. It allows you to control the operability of the application during the boot phase. Thus, a new application has only one attempt to boot successfully.

Rollback Process

The description of the rollback process when *CONFIG_APP_ROLLBACK_ENABLE* option is enabled:

- The new application successfully downloaded and *esp_ota_set_boot_partition()* function makes this partition bootable and sets the state ESP_OTA_IMG_NEW. This state means that the application is new and should be monitored for its first boot.
- Reboot *esp_restart()*.
- The bootloader checks for the ESP_OTA_IMG_PENDING_VERIFY state if it is set, then it will be written to ESP_OTA_IMG_ABORTED.
- The bootloader selects a new application to boot so that the state is not set as ESP_OTA_IMG_INVALID or ESP_OTA_IMG_ABORTED.
- The bootloader checks the selected application for ESP_OTA_IMG_NEW state if it is set, then it will be written to ESP_OTA_IMG_PENDING_VERIFY. This state means that the application requires confirmation of its operability, if this does not happen and a reboot occurs, this state will be overwritten to

ESP_OTA_IMG_ABORTED (see above) and this application will no longer be able to start, i.e. there will be a rollback to the previous work application.

- A new application has started and should make a self-test.
- If the self-test has completed successfully, then you must call the function *esp_ota_mark_app_valid_cancel_rollback()* because the application is awaiting confirmation of operability (ESP_OTA_IMG_PENDING_VERIFY state).
- If the self-test fails then call *esp_ota_mark_app_invalid_rollback_and_reboot()* function to roll back to the previous working application, while the invalid application is set ESP_OTA_IMG_INVALID state.
- If the application has not been confirmed, the state remains ESP_OTA_IMG_PENDING_VERIFY, and the next boot it will be changed to ESP_OTA_IMG_ABORTED. That will prevent re-boot of this application. There will be a rollback to the previous working application.

Unexpected Reset

If a power loss or an unexpected crash occurs at the time of the first boot of a new application, it will roll back the application.

Recommendation: Perform the self-test procedure as quickly as possible, to prevent rollback due to power loss.

Only OTA partitions can be rolled back. Factory partition is not rolled back.

Booting invalid/aborted apps

Booting an application which was previously set to ESP_OTA_IMG_INVALID or ESP_OTA_IMG_ABORTED is possible:

- Get the last invalid application partition *esp_ota_get_last_invalid_partition()*.
- Pass the received partition to *esp_ota_set_boot_partition()*, this will update the otadata.
- Restart *esp_restart()*. The bootloader will boot the specified application.

To determine if self-tests should be run during startup of an application, call the *esp_ota_get_state_partition()* function. If result is ESP_OTA_IMG_PENDING_VERIFY then self-testing and subsequent confirmation of operability is required.

Where the states are set

A brief description of where the states are set:

- ESP_OTA_IMG_VALID state is set by *esp_ota_mark_app_valid_cancel_rollback()* function.

- `ESP_OTA_IMG_UNDEFINED` state is set by *esp_ota_set_boot_partition()* function if *CONFIG_APP_ROLLBACK_ENABLE* option is not enabled.
- `ESP_OTA_IMG_NEW` state is set by *esp_ota_set_boot_partition()* function if *CONFIG_APP_ROLLBACK_ENABLE* option is enabled.
- `ESP_OTA_IMG_INVALID` state is set by *esp_ota_mark_app_invalid_rollback_and_reboot()* function.
- `ESP_OTA_IMG_ABORTED` state is set if there was no confirmation of the application operability and occurs reboots (if *CONFIG_APP_ROLLBACK_ENABLE* option is enabled).
- `ESP_OTA_IMG_PENDING_VERIFY` state is set in a bootloader if *CONFIG_APP_ROLLBACK_ENABLE* option is enabled and selected app has `ESP_OTA_IMG_NEW` state.

Anti-rollback

Anti-rollback prevents rollback to application with security version lower than one programmed in eFuse of chip.

This function works if set *CONFIG_APP_ANTI_ROLLBACK* option. In the bootloader, when selecting a bootable application, an additional security version check is added which is on the chip and in the application image. The version in the bootable firmware must be greater than or equal to the version in the chip.

CONFIG_APP_ANTI_ROLLBACK and *CONFIG_APP_ROLLBACK_ENABLE* options are used together. In this case, rollback is possible only on the security version which is equal or higher than the version in the chip.

A typical anti-rollback scheme is

- New firmware released with the elimination of vulnerabilities with the previous version of security.
- After the developer makes sure that this firmware is working. He can increase the security version and release a new firmware.
- Download new application.
- To make it bootable, run the function *esp_ota_set_boot_partition()*. If the security version of the new application is smaller than the version in the chip, the new application will be erased. Update to new firmware is not possible.
- Reboot.
- In the bootloader, an application with a security version greater than or equal to the version in the chip will be selected. If otadata is in the initial state, and one firmware was loaded via a serial channel, whose secure version is higher than the chip, then the secure version of efuse will be immediately updated in the bootloader.
- New application booted. Then the application should perform diagnostics of the operation and if it is completed successfully, you should call *esp_ota_mark_app_valid_cancel_rollback()* function

to mark the running application with the ESP_OTA_IMG_VALID state and update the secure version on chip. Note that if was called *esp_ota_mark_app_invalid_rollback_and_reboot()* function a rollback may not happend due to the device may not have any bootable apps then it will return ESP_ERR_OTA_ROLLBACK_FAILED error and stay in the ESP_OTA_IMG_PENDING_VERIFY state.

- The next update of app is possible if a running app is in the ESP_OTA_IMG_VALID state.

Recommendation:

If you want to avoid the download/erase overhead in case of the app from the server has security version lower then running app you have to get `new_app_info.secure_version` from the first package of an image and compare it with the secure version of efuse. Use `esp_efuse_check_secure_version(new_app_info.secure_version)` function if it is true then continue downloading otherwise abort.

```
....
bool image_header_was_checked = false;
while (1) {
    int data_read = esp_http_client_read(client, ota_write_data, BUFFSIZE);
    ...
    if (data_read > 0) {
        if (image_header_was_checked == false) {
            esp_app_desc_t new_app_info;
            if (data_read > sizeof(esp_image_header_t) + sizeof(esp_image_segment_header_
↪t) + sizeof(esp_app_desc_t)) {
                // check current version with downloading
                if (esp_efuse_check_secure_version(new_app_info.secure_version) ==␣
↪false) {
                    ESP_LOGE(TAG, "This a new app can not be downloaded due to a secure␣
↪version is lower than stored in efuse.");
                    http_cleanup(client);
                    task_fatal_error();
                }

                image_header_was_checked = true;

                esp_ota_begin(update_partition, OTA_SIZE_UNKNOWN, &update_handle);
            }
        }
        esp_ota_write( update_handle, (const void *)ota_write_data, data_read);
    }
}
...
```

Restrictions:

- The number of bits in the `secure_version` field is limited to 32 bits. This means that only 32 times you can do an anti-rollback. You can reduce the length of this efuse field use *CONFIG_APP_SECURE_VERSION_SIZE_EFUSE_FIELD* option.
- Anti-rollback only works if the encoding scheme for efuse is set to `NONE`.
- The partition table should not have a factory partition, only two of the app.

`security_version`:

- In application image it is stored in `esp_app_desc` structure. The number is set *CONFIG_APP_SECURE_VERSION*.
- In ESP32 it is stored in efuse `EFUSE_BLK3_RDATA4_REG`. (when a eFuse bit is programmed to 1, it can never be reverted to 0). The number of bits set in this register is the `security_version` from app.

Secure OTA Updates Without Secure boot

The verification of signed OTA updates can be performed even without enabling hardware secure boot. For doing so, refer *Signed App Verification Without Hardware Secure Boot*

See also

- *Partition Table documentation*
- *Lower-Level SPI Flash/Partition API*
- *ESP HTTPS OTA*

Application Example

End-to-end example of OTA firmware update workflow: system/ota.

API Reference

Header File

- app_update/include/esp_ota_ops.h

Functions

`const` esp_app_desc_t *`esp_ota_get_app_description`(void)

Return esp_app_desc structure. This structure includes app version.

Return description for running app.

Return Pointer to esp_app_desc structure.

int **esp_ota_get_app_elf_sha256**(char **dst*, size_t *size*)

Fill the provided buffer with SHA256 of the ELF file, formatted as hexadecimal, null-terminated. If the buffer size is not sufficient to fit the entire SHA256 in hex plus a null terminator, the largest possible number of bytes will be written followed by a null.

Return Number of bytes written to dst (including null terminator)

Parameters

- `dst`: Destination buffer
- `size`: Size of the buffer

esp_err_t **esp_ota_begin**(**const** *esp_partition_t* **partition*, size_t *image_size*, *esp_ota_handle_t* **out_handle*)

Commence an OTA update writing to the specified partition.

The specified partition is erased to the specified image size.

If image size is not yet known, pass OTA_SIZE_UNKNOWN which will cause the entire partition to be erased.

On success, this function allocates memory that remains in use until esp_ota_end() is called with the returned handle.

Note: If the rollback option is enabled and the running application has the ESP_OTA_IMG_PENDING_VERIFY state then it will lead to the ESP_ERR_OTA_ROLLBACK_INVALID_STATE error. Confirm the running app before to run download a new app, use esp_ota_mark_app_valid_cancel_rollback() function for it (this should be done as early as possible when you first download a new application).

Return

- ESP_OK: OTA operation commenced successfully.
- ESP_ERR_INVALID_ARG: partition or out_handle arguments were NULL, or partition doesn't point to an OTA app partition.
- ESP_ERR_NO_MEM: Cannot allocate memory for OTA operation.
- ESP_ERR_OTA_PARTITION_CONFLICT: Partition holds the currently running firmware, cannot update in place.
- ESP_ERR_NOT_FOUND: Partition argument not found in partition table.
- ESP_ERR_OTA_SELECT_INFO_INVALID: The OTA data partition contains invalid data.
- ESP_ERR_INVALID_SIZE: Partition doesn't fit in configured flash size.
- ESP_ERR_FLASH_OP_TIMEOUT or ESP_ERR_FLASH_OP_FAIL: Flash write failed.

- ESP_ERR_OTA_ROLLBACK_INVALID_STATE: If the running app has not confirmed state. Before performing an update, the application must be valid.

Parameters

- `partition`: Pointer to info for partition which will receive the OTA update. Required.
- `image_size`: Size of new OTA app image. Partition will be erased in order to receive this size of image. If 0 or OTA_SIZE_UNKNOWN, the entire partition is erased.
- `out_handle`: On success, returns a handle which should be used for subsequent esp_ota_write() and esp_ota_end() calls.

esp_err_t **esp_ota_write**(*esp_ota_handle_t handle*, **const** void **data*, size_t *size*)

Write OTA update data to partition.

This function can be called multiple times as data is received during the OTA operation. Data is written sequentially to the partition.

Return

- ESP_OK: Data was written to flash successfully.
- ESP_ERR_INVALID_ARG: handle is invalid.
- ESP_ERR_OTA_VALIDATE_FAILED: First byte of image contains invalid app image magic byte.
- ESP_ERR_FLASH_OP_TIMEOUT or ESP_ERR_FLASH_OP_FAIL: Flash write failed.
- ESP_ERR_OTA_SELECT_INFO_INVALID: OTA data partition has invalid contents

Parameters

- `handle`: Handle obtained from esp_ota_begin
- `data`: Data buffer to write
- `size`: Size of data buffer in bytes.

esp_err_t **esp_ota_end**(*esp_ota_handle_t handle*)

Finish OTA update and validate newly written app image.

Note After calling esp_ota_end(), the handle is no longer valid and any memory associated with it is freed (regardless of result).

Return

- ESP_OK: Newly written OTA app image is valid.
- ESP_ERR_NOT_FOUND: OTA handle was not found.
- ESP_ERR_INVALID_ARG: Handle was never written to.

- ESP_ERR_OTA_VALIDATE_FAILED: OTA image is invalid (either not a valid app image, or - if secure boot is enabled - signature failed to verify.)
- ESP_ERR_INVALID_STATE: If flash encryption is enabled, this result indicates an internal error writing the final encrypted bytes to flash.

Parameters

- `handle`: Handle obtained from esp_ota_begin().

esp_err_t **esp_ota_set_boot_partition(const** *esp_partition_t* ***partition)**

Configure OTA data for a new boot partition.

Note If this function returns ESP_OK, calling esp_restart() will boot the newly configured app partition.

Return

- ESP_OK: OTA data updated, next reboot will use specified partition.
- ESP_ERR_INVALID_ARG: partition argument was NULL or didn' t point to a valid OTA partition of type "app" .
- ESP_ERR_OTA_VALIDATE_FAILED: Partition contained invalid app image. Also returned if secure boot is enabled and signature validation failed.
- ESP_ERR_NOT_FOUND: OTA data partition not found.
- ESP_ERR_FLASH_OP_TIMEOUT or ESP_ERR_FLASH_OP_FAIL: Flash erase or write failed.

Parameters

- `partition`: Pointer to info for partition containing app image to boot.

const *esp_partition_t* ***esp_ota_get_boot_partition(**void)

Get partition info of currently configured boot app.

If esp_ota_set_boot_partition() has been called, the partition which was set by that function will be returned.

If esp_ota_set_boot_partition() has not been called, the result is usually the same as esp_ota_get_running_partition(). The two results are not equal if the configured boot partition does not contain a valid app (meaning that the running partition will be an app that the bootloader chose via fallback).

If the OTA data partition is not present or not valid then the result is the first app partition found in the partition table. In priority order, this means: the factory app, the first OTA app slot, or the test app partition.

Note that there is no guarantee the returned partition is a valid app. Use esp_image_verify(ESP_IMAGE_VERIFY, ···) to verify if the returned partition contains a bootable image.

Return Pointer to info for partition structure, or NULL if partition table is invalid or a flash read operation failed. Any returned pointer is valid for the lifetime of the application.

`const` *esp_partition_t* ***esp_ota_get_running_partition**(void)

Get partition info of currently running app.

This function is different to esp_ota_get_boot_partition() in that it ignores any change of selected boot partition caused by esp_ota_set_boot_partition(). Only the app whose code is currently running will have its partition information returned.

The partition returned by this function may also differ from esp_ota_get_boot_partition() if the configured boot partition is somehow invalid, and the bootloader fell back to a different app partition at boot.

Return Pointer to info for partition structure, or NULL if no partition is found or flash read operation failed. Returned pointer is valid for the lifetime of the application.

`const` *esp_partition_t* ***esp_ota_get_next_update_partition**(`const` *esp_partition_t* **start_from*)

Return the next OTA app partition which should be written with a new firmware.

Call this function to find an OTA app partition which can be passed to esp_ota_begin().

Finds next partition round-robin, starting from the current running partition.

Return Pointer to info for partition which should be updated next. NULL result indicates invalid OTA data partition, or that no eligible OTA app slot partition was found.

Parameters

- `start_from`: If set, treat this partition info as describing the current running partition. Can be NULL, in which case esp_ota_get_running_partition() is used to find the currently running partition. The result of this function is never the same as this argument.

esp_err_t **esp_ota_get_partition_description**(`const` *esp_partition_t* **partition*, esp_app_desc_t **app_desc*)

Returns esp_app_desc structure for app partition. This structure includes app version.

Returns a description for the requested app partition.

Return

- ESP_OK Successful.
- ESP_ERR_NOT_FOUND app_desc structure is not found. Magic word is incorrect.

- ESP_ERR_NOT_SUPPORTED Partition is not application.
- ESP_ERR_INVALID_ARG Arguments is NULL or if partition's offset exceeds partition size.
- ESP_ERR_INVALID_SIZE Read would go out of bounds of the partition.
- or one of error codes from lower-level flash driver.

Parameters

- `partition`: Pointer to app partition. (only app partition)
- `app_desc`: Structure of info about app.

esp_err_t **esp_ota_mark_app_valid_cancel_rollback()**

This function is called to indicate that the running app is working well.

Return

- ESP_OK: if successful.

esp_err_t **esp_ota_mark_app_invalid_rollback_and_reboot()**

This function is called to roll back to the previously workable app with reboot.

If rollback is successful then device will reset else API will return with error code. Checks applications on a flash drive that can be booted in case of rollback. If the flash does not have at least one app (except the running app) then rollback is not possible.

Return

- ESP_FAIL: if not successful.
- ESP_ERR_OTA_ROLLBACK_FAILED: The rollback is not possible due to flash does not have any apps.

const *esp_partition_t* ***esp_ota_get_last_invalid_partition()**

Returns last partition with invalid state (ESP_OTA_IMG_INVALID or ESP_OTA_IMG_ABORTED).

Return partition.

esp_err_t **esp_ota_get_state_partition(const** *esp_partition_t* ***partition**, esp_ota_img_states_t ***ota_state**)

Returns state for given partition.

Return

- ESP_OK: Successful.
- ESP_ERR_INVALID_ARG: partition or ota_state arguments were NULL.
- ESP_ERR_NOT_SUPPORTED: partition is not ota.

- ESP_ERR_NOT_FOUND: Partition table does not have otadata or state was not found for given partition.

Parameters

- `partition`: Pointer to partition.
- `ota_state`: state of partition (if this partition has a record in otadata).

esp_err_t **esp_ota_erase_last_boot_app_partition**(void)

Erase previous boot app partition and corresponding otadata select for this partition.

When current app is marked to as valid then you can erase previous app partition.

Return

- ESP_OK: Successful, otherwise ESP_ERR.

bool **esp_ota_check_rollback_is_possible**(void)

Checks applications on the slots which can be booted in case of rollback.

These applications should be valid (marked in otadata as not UNDEFINED, INVALID or ABORTED and crc is good) and be able booted, and secure_version of app >= secure_version of efuse (if anti-rollback is enabled).

Return

- True: Returns true if the slots have at least one app (except the running app).
- False: The rollback is not possible.

Macros

`OTA_SIZE_UNKNOWN`

Used for esp_ota_begin() if new image size is unknown

`ESP_ERR_OTA_BASE`

Base error code for ota_ops api

`ESP_ERR_OTA_PARTITION_CONFLICT`

Error if request was to write or erase the current running partition

`ESP_ERR_OTA_SELECT_INFO_INVALID`

Error if OTA data partition contains invalid content

`ESP_ERR_OTA_VALIDATE_FAILED`

Error if OTA app image is invalid

`ESP_ERR_OTA_SMALL_SEC_VER`

Error if the firmware has a secure version less than the running firmware.

ESP_ERR_OTA_ROLLBACK_FAILED
: Error if flash does not have valid firmware in passive partition and hence rollback is not possible

ESP_ERR_OTA_ROLLBACK_INVALID_STATE
: Error if current active firmware is still marked in pending validation state (ESP_OTA_IMG_PENDING_VERIFY), essentially first boot of firmware image post upgrade and hence firmware upgrade is not possible

Type Definitions

typedef uint32_t **esp_ota_handle_t**
: Opaque handle for an application OTA update.

  esp_ota_begin() returns a handle which is then used for subsequent calls to esp_ota_write() and esp_ota_end().

3.7.17 ESP HTTPS OTA

Overview

esp_https_ota provides simplified APIs to perform firmware upgrades over HTTPS. It' s an abstraction layer over existing OTA APIs.

Application Example

```
esp_err_t do_firmware_upgrade()
{
    esp_http_client_config_t config = {
        .url = CONFIG_FIRMWARE_UPGRADE_URL,
        .cert_pem = (char *)server_cert_pem_start,
    };
    esp_err_t ret = esp_https_ota(&config);
    if (ret == ESP_OK) {
        esp_restart();
    } else {
        return ESP_FAIL;
    }
    return ESP_OK;
}
```

Signature Verification

For additional security, signature of OTA firmware images can be verified. For that, refer *Secure OTA Updates Without Secure boot*

API Reference

Header File

- esp_https_ota/include/esp_https_ota.h

Functions

esp_err_t **esp_https_ota**(**const** *esp_http_client_config_t* **config*)

HTTPS OTA Firmware upgrade.

This function allocates HTTPS OTA Firmware upgrade context, establishes HTTPS connection, reads image data from HTTP stream and writes it to OTA partition and finishes HTTPS OTA Firmware upgrade operation. This API supports URL redirection, but if CA cert of URLs differ then it should be appended to `cert_pem` member of `config`.

Note This API handles the entire OTA operation, so if this API is being used then no other APIs from `esp_https_ota` component should be called. If more information and control is needed during the HTTPS OTA process, then one can use `esp_https_ota_begin` and subsequent APIs. If this API returns successfully, esp_restart() must be called to boot from the new firmware image.

Return

- ESP_OK: OTA data updated, next reboot will use specified partition.
- ESP_FAIL: For generic failure.
- ESP_ERR_INVALID_ARG: Invalid argument
- ESP_ERR_OTA_VALIDATE_FAILED: Invalid app image
- ESP_ERR_NO_MEM: Cannot allocate memory for OTA operation.
- ESP_ERR_FLASH_OP_TIMEOUT or ESP_ERR_FLASH_OP_FAIL: Flash write failed.
- For other return codes, refer OTA documentation in esp-idf' s app_update component.

Parameters

- `config`: pointer to *esp_http_client_config_t* structure.

esp_err_t **esp_https_ota_begin**(*esp_https_ota_config_t* **ota_config*, *esp_https_ota_handle_t* **handle*)

Start HTTPS OTA Firmware upgrade.

This function initializes ESP HTTPS OTA context and establishes HTTPS connection. This function must be invoked first. If this function returns successfully, then `esp_https_ota_perform` should be called to continue with the OTA process and there should be a call to `esp_https_ota_finish` on completion of OTA operation or on failure in subsequent operations. This API supports URL redirection, but if CA cert of URLs differ then it should be appended to `cert_pem` member of `http_config`, which is a part of `ota_config`. In case of error, this API explicitly sets `handle` to NULL.

Note This API is blocking, so setting `is_async` member of `http_config` structure will result in an error.

Return

- ESP_OK: HTTPS OTA Firmware upgrade context initialised and HTTPS connection established
- ESP_FAIL: For generic failure.
- ESP_ERR_INVALID_ARG: Invalid argument (missing/incorrect config, certificate, etc.)
- For other return codes, refer documentation in app_update component and esp_http_client component in esp-idf.

Parameters

- `ota_config`: pointer to *esp_https_ota_config_t* structure
- `handle`: pointer to an allocated data of type `esp_https_ota_handle_t` which will be initialised in this function

esp_err_t **esp_https_ota_perform**(*esp_https_ota_handle_t* *https_ota_handle*)

Read image data from HTTP stream and write it to OTA partition.

This function reads image data from HTTP stream and writes it to OTA partition. This function must be called only if esp_https_ota_begin() returns successfully. This function must be called in a loop since it returns after every HTTP read operation thus giving you the flexibility to stop OTA operation midway.

Return

- ESP_ERR_HTTPS_OTA_IN_PROGRESS: OTA update is in progress, call this API again to continue.
- ESP_OK: OTA update was successful
- ESP_FAIL: OTA update failed
- ESP_ERR_INVALID_ARG: Invalid argument

- ESP_ERR_OTA_VALIDATE_FAILED: Invalid app image
- ESP_ERR_NO_MEM: Cannot allocate memory for OTA operation.
- ESP_ERR_FLASH_OP_TIMEOUT or ESP_ERR_FLASH_OP_FAIL: Flash write failed.
- For other return codes, refer OTA documentation in esp-idf's app_update component.

Parameters

- `https_ota_handle`: pointer to esp_https_ota_handle_t structure

bool **esp_https_ota_is_complete_data_received**(*esp_https_ota_handle_t https_ota_handle*)

Checks if complete data was received or not.

Note This API can be called just before esp_https_ota_finish() to validate if the complete image was indeed received.

Return

- false
- true

Parameters

- `https_ota_handle`: pointer to esp_https_ota_handle_t structure

esp_err_t **esp_https_ota_finish**(*esp_https_ota_handle_t https_ota_handle*)

Clean-up HTTPS OTA Firmware upgrade and close HTTPS connection.

This function closes the HTTP connection and frees the ESP HTTPS OTA context. This function switches the boot partition to the OTA partition containing the new firmware image.

Note If this API returns successfully, esp_restart() must be called to boot from the new firmware image

Return

- ESP_OK: Clean-up successful
- ESP_ERR_INVALID_STATE
- ESP_ERR_INVALID_ARG: Invalid argument
- ESP_ERR_OTA_VALIDATE_FAILED: Invalid app image

Parameters

- `https_ota_handle`: pointer to esp_https_ota_handle_t structure

esp_err_t **esp_https_ota_get_img_desc**(*esp_https_ota_handle_t* *https_ota_handle*, esp_app_desc_t *new_app_info)

Reads app description from image header. The app description provides information like the "Firmware version" of the image.

Note This API can be called only after esp_https_ota_begin() and before esp_https_ota_perform(). Calling this API is not mandatory.

Return

- ESP_ERR_INVALID_ARG: Invalid arguments
- ESP_FAIL: Failed to read image descriptor
- ESP_OK: Successfully read image descriptor

Parameters

- **https_ota_handle**: pointer to esp_https_ota_handle_t structure
- **new_app_info**: pointer to an allocated esp_app_desc_t structure

int **esp_https_ota_get_image_len_read**(*esp_https_ota_handle_t* *https_ota_handle*)

Structures

struct esp_https_ota_config_t

ESP HTTPS OTA configuration.

Public Members

const *esp_http_client_config_t* ***http_config**

ESP HTTP client configuration

Macros

ESP_ERR_HTTPS_OTA_BASE

ESP_ERR_HTTPS_OTA_IN_PROGRESS

Type Definitions

typedef void ***esp_https_ota_handle_t**

3.7.18 ESP-pthread

Overview

This module offers Espressif specific extensions to the pthread library that can be used to influence the beh

- Stack size of the pthreads
- Priority of the created pthreads
- Inheriting this configuration across threads
- Thread name
- Core affinity / core pinning.

Example to tune the stack size of the pthread:

```
main()
{
    pthread_t t1;

    esp_pthread_cfg_t cfg = esp_create_default_pthread_config();
    cfg.stack_size = (4 * 1024);
    esp_pthread_set_cfg(&cfg);

    pthread_create(&t1, NULL, thread_func);
}
```

The API can also be used for inheriting the settings across threads. For example:

```
void * my_thread2(void * p)
{
      /* This thread will inherit the stack size of 4K */
      printf("In my_thread2\n");
}

void * my_thread1(void * p)
{
      printf("In my_thread1\n");
      pthread_t t2;
      pthread_create(&t2, NULL, my_thread2);
}
```

(下页继续)

(续上页)

```
main()
{

    pthread_t t1;

    esp_pthread_cfg_t cfg = esp_create_default_pthread_config();
    cfg.stack_size = (4 * 1024);
    cfg.inherit_cfg = true;
    esp_pthread_set_cfg(&cfg);

    pthread_create(&t1, NULL, my_thread1);
}
```

API Reference

Header File

- pthread/include/esp_pthread.h

Functions

esp_pthread_cfg_t **esp_pthread_get_default_config**()

Creates a default pthread configuration based on the values set via menuconfig.

Return A default configuration structure.

esp_err_t **esp_pthread_set_cfg**(const *esp_pthread_cfg_t* **cfg*)

Configure parameters for creating pthread.

This API allows you to configure how the subsequent pthread_create() call will behave. This call can be used to setup configuration parameters like stack size, priority, configuration inheritance etc.

If the 'inherit' flag in the configuration structure is enabled, then the same configuration is also inherited in the thread subtree.

Note Passing non-NULL attributes to pthread_create() will override the stack_size parameter set using this API

Return

- ESP_OK if configuration was successfully set
- ESP_ERR_NO_MEM if out of memory

- ESP_ERR_INVALID_ARG if stack_size is less than PTHREAD_STACK_MIN

Parameters

- `cfg`: The pthread config parameters

esp_err_t **esp_pthread_get_cfg**(*esp_pthread_cfg_t* *p)

Get current pthread creation configuration.

This will retrieve the current configuration that will be used for creating threads.

Return

- ESP_OK if the configuration was available
- ESP_ERR_NOT_FOUND if a configuration wasn't previously set

Parameters

- `p`: Pointer to the pthread config structure that will be updated with the currently configured parameters

Structures

struct esp_pthread_cfg_t

pthread configuration structure that influences pthread creation

Public Members

size_t **stack_size**

The stack size of the pthread.

size_t **prio**

The thread's priority.

bool **inherit_cfg**

Inherit this configuration further.

const char ***thread_name**

The thread name.

int **pin_to_core**

The core id to pin the thread to. Has the same value range as xCoreId argument of xTaskCreatePinnedToCore.

Macros

PTHREAD_STACK_MIN

3.7.19 Error Codes and Helper Functions

This section lists definitions of common ESP-IDF error codes and several helper functions related to error handling.

For general information about error codes in ESP-IDF, see *Error Handling*.

For the full list of error codes defined in ESP-IDF, see *Error Code Reference*.

API Reference

Header File

- esp32/include/esp_err.h

Functions

`const` char *`esp_err_to_name`(*esp_err_t code*)

Returns string for esp_err_t error codes.

This function finds the error code in a pre-generated lookup-table and returns its string representation.

The function is generated by the Python script tools/gen_esp_err_to_name.py which should be run each time an esp_err_t error is modified, created or removed from the IDF project.

Return string error message

Parameters

- `code`: esp_err_t error code

`const` char *`esp_err_to_name_r`(*esp_err_t code*, char **buf*, size_t *buflen*)

Returns string for esp_err_t and system error codes.

This function finds the error code in a pre-generated lookup-table of esp_err_t errors and returns its string representation. If the error code is not found then it is attempted to be found among system errors.

The function is generated by the Python script tools/gen_esp_err_to_name.py which should be run each time an esp_err_t error is modified, created or removed from the IDF project.

Return buf containing the string error message

Parameters

- `code`: esp_err_t error code
- `buf`: buffer where the error message should be written

- `buflen`: Size of buffer buf. At most buflen bytes are written into the buf buffer (including the terminating null byte).

Macros

ESP_OK

esp_err_t value indicating success (no error)

ESP_FAIL

Generic esp_err_t code indicating failure

ESP_ERR_NO_MEM

Out of memory

ESP_ERR_INVALID_ARG

Invalid argument

ESP_ERR_INVALID_STATE

Invalid state

ESP_ERR_INVALID_SIZE

Invalid size

ESP_ERR_NOT_FOUND

Requested resource not found

ESP_ERR_NOT_SUPPORTED

Operation or feature not supported

ESP_ERR_TIMEOUT

Operation timed out

ESP_ERR_INVALID_RESPONSE

Received response was invalid

ESP_ERR_INVALID_CRC

CRC or checksum was invalid

ESP_ERR_INVALID_VERSION

Version was invalid

ESP_ERR_INVALID_MAC

MAC address was invalid

ESP_ERR_WIFI_BASE

Starting number of WiFi error codes

ESP_ERR_MESH_BASE

Starting number of MESH error codes

ESP_ERROR_CHECK(x)

Macro which can be used to check the error code, and terminate the program in case the code is not ESP_OK. Prints the error code, error location, and the failed statement to serial output.

Disabled if assertions are disabled.

ESP_ERROR_CHECK_WITHOUT_ABORT(x)

Macro which can be used to check the error code. Prints the error code, error location, and the failed statement to serial output. In comparison with ESP_ERROR_CHECK(), this prints the same error message but isn't terminating the program.

Type Definitions

typedef int32_t **esp_err_t**

3.7.20 Miscellaneous System APIs

Software reset

To perform software reset of the chip, *esp_restart()* function is provided. When the function is called, execution of the program will stop, both CPUs will be reset, application will be loaded by the bootloader and started again.

Additionally, *esp_register_shutdown_handler()* function is provided to register a routine which needs to be called prior to restart (when done by *esp_restart()*). This is similar to the functionality of `atexit` POSIX function.

Reset reason

ESP-IDF application can be started or restarted due to a variety of reasons. To get the last reset reason, call *esp_reset_reason()* function. See description of *esp_reset_reason_t* for the list of possible reset reasons.

Heap memory

Two heap memory related functions are provided:

- *esp_get_free_heap_size()* returns the current size of free heap memory
- *esp_get_minimum_free_heap_size()* returns the minimum size of free heap memory that was available during program execution.

Note that ESP-IDF supports multiple heaps with different capabilities. Functions mentioned in this section return the size of heap memory which can be allocated using `malloc` family of functions. For further information about heap memory see *Heap Memory Allocation*.

Random number generation

ESP32 contains a hardware random number generator, values from it can be obtained using *esp_random()*.

When Wi-Fi or Bluetooth are enabled, numbers returned by hardware random number generator (RNG) can be considered true random numbers. Without Wi-Fi or Bluetooth enabled, hardware RNG is a pseudo-random number generator. At startup, ESP-IDF bootloader seeds the hardware RNG with entropy, but care must be taken when reading random values between the start of `app_main` and initialization of Wi-Fi or Bluetooth drivers.

MAC Address

These APIs allow querying and customizing MAC addresses used by Wi-Fi, Bluetooth, and Ethernet drivers.

ESP32 has up to 4 network interfaces: Wi-Fi station, Wi-Fi AP, Ethernet, and Bluetooth. Each of these interfaces needs to have a MAC address assigned to it. In ESP-IDF these addresses are calculated from *Base MAC address*. Base MAC address can be initialized with factory-programmed value from EFUSE, or with a user-defined value. In addition to setting the base MAC address, applications can specify the way in which MAC addresses are allocated to devices. See *Number of universally administered MAC address* section for more details.

Interface	MAC address (4 universally administered)	MAC address (2 universally administered)
Wi-Fi Station	base_mac	base_mac
Wi-Fi SoftAP	base_mac, +1 to the last octet	base_mac, first octet randomized
Bluetooth	base_mac, +2 to the last octet	base_mac, +1 to the last octet
Ethernet	base_mac, +3 to the last octet	base_mac, +1 to the last octet, first octet randomized

Base MAC address

Wi-Fi, Bluetooth, and Ethernet drivers use *esp_read_mac()* function to get MAC address for a specific interface.

By default, this function will use MAC address factory programmed in BLK0 of EFUSE as the base MAC address. MAC addresses of each interface will be calculated according to the table above.

Applications which don't use MAC address factory programmed into BLK0 of EFUSE can modify base MAC address used by *esp_read_mac()* using a call to *esp_base_mac_addr_set()*. Custom value of MAC address can come from application defined storage, such as Flash, NVS, etc. Note that the call

to *esp_base_mac_addr_set()* needs to happen before network protocol stacks are initialized, for example, early in `app_main`.

Custom MAC address in BLK3 of EFUSE

To facilitate usage of custom MAC addresses, ESP-IDF provides *esp_efuse_mac_get_custom()* function, which loads MAC address from BLK3 of EFUSE. This function assumes that custom MAC address is stored in BLK3 of EFUSE (EFUSE_BLK3_RDATA0, EFUSE_BLK3_RDATA1, EFUSE_BLK3_RDATA2, EFUSE_BLK3_RDATA3, EFUSE_BLK3_RDATA4, EFUSE_BLK3_RDATA5 registers) in the following format:

Field	# of bits	Range of bits	Notes
Version	8	191:184	0: invalid, others —valid
Reserved	128	183:56	
MAC address	48	55:8	
MAC address CRC	8	7:0	CRC-8-CCITT, polynomial 0x07

Once MAC address has been obtained using *esp_efuse_mac_get_custom()*, call *esp_base_mac_addr_set()* to set this MAC address as base MAC address.

Number of universally administered MAC address

Serveral MAC addresses (universally administered by IEEE) are uniquely assigned to the networking interfaces (Wi-Fi/BT/Ethernet). The final octet of each universally administered MAC address increases by one. Only the first one of them (which is called base MAC address) is stored in EFUSE or external storage, the others are generated from it. Here, 'generate' means adding 0, 1, 2 and 3 (respectively) to the final octet of the base MAC address.

If the universally administered MAC addresses are not enough for all of the networking interfaces, locally administered MAC addresses which are derived from universally administered MAC addresses are assigned to the rest of networking interfaces.

See this article for the definition of local and universally administered MAC addresses.

The number of universally administered MAC address can be configured using *CONFIG_NUMBER_OF_UNIVERSAL_MAC_ADDRESS*.

If the number of universal MAC addresses is two, only two interfaces (Wi-Fi Station and Bluetooth) receive a universally administered MAC address. These are generated sequentially by adding 0 and 1 (respectively) to the base MAC address. The remaining two interfaces (Wi-Fi SoftAP and Ethernet) receive local MAC addresses. These are derived from the universal Wi-Fi station and Bluetooth MAC addresses, respectively.

If the number of universal MAC addresses is four, all four interfaces (Wi-Fi Station, Wi-Fi SoftAP, Bluetooth and Ethernet) receive a universally administered MAC address. These are generated sequentially by adding

0, 1, 2 and 3 (respectively) to the final octet of the base MAC address.

When using the default (Espressif-assigned) base MAC address, either setting can be used. When using a custom universal MAC address range, the correct setting will depend on the allocation of MAC addresses in this range (either 2 or 4 per device.)

Chip version

esp_chip_info() function fills *esp_chip_info_t* structure with information about the chip. This includes the chip revision, number of CPU cores, and a bit mask of features enabled in the chip.

SDK version

esp_get_idf_version() returns a string describing the IDF version which was used to compile the application. This is the same value as the one available through `IDF_VER` variable of the build system. The version string generally has the format of `git describe` output.

To get the version at build time, additional version macros are provided. They can be used to enable or disable parts of the program depending on IDF version.

- *ESP_IDF_VERSION_MAJOR*, *ESP_IDF_VERSION_MINOR*, *ESP_IDF_VERSION_PATCH* are defined to integers representing major, minor, and patch version.
- *ESP_IDF_VERSION_VAL* and *ESP_IDF_VERSION* can be used when implementing version checks:

```
#include "esp_idf_version.h"

#if ESP_IDF_VERSION >= ESP_IDF_VERSION_VAL(4, 0, 0)
    // enable functionality present in IDF v4.0
#endif
```

App version

Application version is stored in `esp_app_desc_t` structure. It is located in DROM sector and has a fixed offset from the beginning of the binary file. The structure is located after `esp_image_header_t` and `esp_image_segment_header_t` structures. The field version has string type and max length 32 chars.

To set version in your project manually you need to set `PROJECT_VER` variable in your project Makefile/CMakeLists.txt:

- For Make build system: in application Makefile put `PROJECT_VER = "0.1.0.1"` before including project.mk
- For Cmake build system: in application CMakeLists.txt put `set(PROJECT_VER "0.1.0.1")` before including project.cmake.

If `PROJECT_VER` variable is not set in project Makefile/CMakeLists.txt then it will be retrieved from either `$(PROJECT_PATH)/version.txt` file (if present) else using git command `git describe`. If neither is available then `PROJECT_VER` will be set to "1". Application can make use of this by calling *esp_ota_get_app_description()* or *esp_ota_get_partition_description()* functions.

API Reference

Header File

- esp32/include/esp_system.h

Functions

esp_err_t **esp_register_shutdown_handler**(*shutdown_handler_t handle*)

Register shutdown handler.

This function allows you to register a handler that gets invoked before the application is restarted using esp_restart function.

void **esp_restart**(void)

Restart PRO and APP CPUs.

This function can be called both from PRO and APP CPUs. After successful restart, CPU reset reason will be SW_CPU_RESET. Peripherals (except for WiFi, BT, UART0, SPI1, and legacy timers) are not reset. This function does not return.

esp_reset_reason_t **esp_reset_reason**(void)

Get reason of last reset.

Return See description of esp_reset_reason_t for explanation of each value.

uint32_t **esp_get_free_heap_size**(void)

Get the size of available heap.

Note that the returned value may be larger than the maximum contiguous block which can be allocated.

Return Available heap size, in bytes.

uint32_t **esp_get_free_internal_heap_size**(void)

Get the size of available internal heap.

Note that the returned value may be larger than the maximum contiguous block which can be allocated.

Return Available internal heap size, in bytes.

uint32_t **esp_get_minimum_free_heap_size**(void)

Get the minimum heap that has ever been available.

Return Minimum free heap ever available

uint32_t **esp_random**(void)

Get one random 32-bit word from hardware RNG.

The hardware RNG is fully functional whenever an RF subsystem is running (ie Bluetooth or WiFi is enabled). For random values, call this function after WiFi or Bluetooth are started.

If the RF subsystem is not used by the program, the function bootloader_random_enable() can be called to enable an entropy source. bootloader_random_disable() must be called before RF subsystem or I2S peripheral are used. See these functions' documentation for more details.

Any time the app is running without an RF subsystem (or bootloader_random) enabled, RNG hardware should be considered a PRNG. A very small amount of entropy is available due to pre-seeding while the IDF bootloader is running, but this should not be relied upon for any use.

Return Random value between 0 and UINT32_MAX

void **esp_fill_random**(void *_buf_, size_t _len_)

Fill a buffer with random bytes from hardware RNG.

Note This function has the same restrictions regarding available entropy as esp_random()

Parameters

- `buf`: Pointer to buffer to fill with random numbers.
- `len`: Length of buffer in bytes

esp_err_t **esp_base_mac_addr_set**(uint8_t *_mac_)

Set base MAC address with the MAC address which is stored in BLK3 of EFUSE or external storage e.g. flash and EEPROM.

Base MAC address is used to generate the MAC addresses used by the networking interfaces. If using base MAC address stored in BLK3 of EFUSE or external storage, call this API to set base MAC address with the MAC address which is stored in BLK3 of EFUSE or external storage before initializing WiFi/BT/Ethernet.

Return ESP_OK on success

Parameters

- `mac`: base MAC address, length: 6 bytes.

esp_err_t **esp_base_mac_addr_get**(uint8_t *_mac_)

Return base MAC address which is set using esp_base_mac_addr_set.

Return ESP_OK on success ESP_ERR_INVALID_MAC base MAC address has not been set

Parameters

- `mac`: base MAC address, length: 6 bytes.

esp_err_t **esp_efuse_mac_get_custom**(uint8_t *mac)

Return base MAC address which was previously written to BLK3 of EFUSE.

Base MAC address is used to generate the MAC addresses used by the networking interfaces. This API returns the custom base MAC address which was previously written to BLK3 of EFUSE. Writing this EFUSE allows setting of a different (non-Espressif) base MAC address. It is also possible to store a custom base MAC address elsewhere, see esp_base_mac_addr_set() for details.

Return ESP_OK on success ESP_ERR_INVALID_VERSION An invalid MAC version field was read from BLK3 of EFUSE ESP_ERR_INVALID_CRC An invalid MAC CRC was read from BLK3 of EFUSE

Parameters

- `mac`: base MAC address, length: 6 bytes.

esp_err_t **esp_efuse_mac_get_default**(uint8_t *mac)

Return base MAC address which is factory-programmed by Espressif in BLK0 of EFUSE.

Return ESP_OK on success

Parameters

- `mac`: base MAC address, length: 6 bytes.

esp_err_t **esp_read_mac**(uint8_t *mac, *esp_mac_type_t type*)

Read base MAC address and set MAC address of the interface.

This function first get base MAC address using esp_base_mac_addr_get or reads base MAC address from BLK0 of EFUSE. Then set the MAC address of the interface including wifi station, wifi softap, bluetooth and ethernet.

Return ESP_OK on success

Parameters

- `mac`: MAC address of the interface, length: 6 bytes.
- `type`: type of MAC address, 0:wifi station, 1:wifi softap, 2:bluetooth, 3:ethernet.

esp_err_t **esp_derive_local_mac**(uint8_t *local_mac, **const** uint8_t *universal_mac)

Derive local MAC address from universal MAC address.

This function derives a local MAC address from an universal MAC address. A `definition of local vs universal MAC address can be found on Wikipedia <>`. In ESP32, universal MAC address is

generated from base MAC address in EFUSE or other external storage. Local MAC address is derived from the universal MAC address.

Return ESP_OK on success

Parameters

- `local_mac`: Derived local MAC address, length: 6 bytes.
- `universal_mac`: Source universal MAC address, length: 6 bytes.

void **esp_chip_info**(*esp_chip_info_t* **out_info*)

Fill an *esp_chip_info_t* structure with information about the chip.

Parameters

- `out_info`: structure to be filled

bool **soc_has_cache_lock_bug**(void)

Cache lock bug exists or not.

Return

- true : bug exists
- false : bug not exists

Structures

struct esp_chip_info_t

The structure represents information about the chip.

Public Members

esp_chip_model_t **model**

chip model, one of esp_chip_model_t

uint32_t **features**

bit mask of CHIP_FEATURE_x feature flags

uint8_t **cores**

number of CPU cores

uint8_t **revision**

chip revision number

Macros

`CHIP_FEATURE_EMB_FLASH`
Chip has embedded flash memory.

`CHIP_FEATURE_WIFI_BGN`
Chip has 2.4GHz WiFi.

`CHIP_FEATURE_BLE`
Chip has Bluetooth LE.

`CHIP_FEATURE_BT`
Chip has Bluetooth Classic.

Type Definitions

`typedef` void (*`shutdown_handler_t`)(void)
Shutdown handler type

Enumerations

`enum esp_mac_type_t`
Values:

`ESP_MAC_WIFI_STA`

`ESP_MAC_WIFI_SOFTAP`

`ESP_MAC_BT`

`ESP_MAC_ETH`

`enum esp_reset_reason_t`
Reset reasons.

Values:

`ESP_RST_UNKNOWN`
Reset reason can not be determined.

`ESP_RST_POWERON`
Reset due to power-on event.

`ESP_RST_EXT`
Reset by external pin (not applicable for ESP32)

`ESP_RST_SW`
Software reset via esp_restart.

`ESP_RST_PANIC`
Software reset due to exception/panic.

`ESP_RST_INT_WDT`
Reset (software or hardware) due to interrupt watchdog.

`ESP_RST_TASK_WDT`
Reset due to task watchdog.

`ESP_RST_WDT`
Reset due to other watchdogs.

`ESP_RST_DEEPSLEEP`
Reset after exiting deep sleep mode.

`ESP_RST_BROWNOUT`
Brownout reset (software or hardware)

`ESP_RST_SDIO`
Reset over SDIO.

`enum esp_chip_model_t`
Chip models.

Values:

`CHIP_ESP32` = 1
ESP32.

Header File

- esp32/include/esp_idf_version.h

Functions

`const` char *`esp_get_idf_version`(void)
Return full IDF version string, same as 'git describe' output.

Note If you are printing the ESP-IDF version in a log file or other information, this function provides more information than using the numerical version macros. For example, numerical version macros don't differentiate between development, pre-release and release versions, but the output of this function does.

Return constant string from IDF_VER

Macros

`ESP_IDF_VERSION_MAJOR`
Major version number (X.x.x)

`ESP_IDF_VERSION_MINOR`
Minor version number (x.X.x)

`ESP_IDF_VERSION_PATCH`
Patch version number (x.x.X)

`ESP_IDF_VERSION_VAL`(major, minor, patch)
Macro to convert IDF version number into an integer

To be used in comparisons, such as ESP_IDF_VERSION >= ESP_IDF_VERSION_VAL(4, 0, 0)

`ESP_IDF_VERSION`
Current IDF version, as an integer

To be used in comparisons, such as ESP_IDF_VERSION >= ESP_IDF_VERSION_VAL(4, 0, 0)

Example code for this API section is provided in system directory of ESP-IDF examples.

3.8 Configuration Options

3.8.1 Introduction

ESP-IDF uses Kconfig system to provide a compile-time configuration mechanism. Kconfig is based around options of several types: integer, string, boolean. Kconfig files specify dependencies between options, default values of the options, the way the options are grouped together, etc.

Applications developers can use `make menuconfig` build target to edit components' configuration. This configuration is saved inside `sdkconfig` file in the project root directory. Based on `sdkconfig`, application build targets will generate `sdkconfig.h` file in the build directory, and will make sdkconfig options available to component makefiles.

3.8.2 Using sdkconfig.defaults

When updating ESP-IDF version, it is not uncommon to find that new Kconfig options are introduced. When this happens, application build targets will offer an interactive prompt to select values for the new options. New values are then written into `sdkconfig` file. To supress interactive prompts, applications can either define `BATCH_BUILD` environment variable, which will cause all prompts to be suppressed. This is the same effect as that of `V` or `VERBOSE` variables. Alternatively, `defconfig` build target can be used to update configuration for all new variables to the default values.

In some cases, such as when `sdkconfig` file is under revision control, the fact that `sdkconfig` file gets changed by the build system may be inconvenient. The build system offers a way to avoid this, in the form of `sdkconfig.defaults` file. This file is never touched by the build system, and must be created manually. It can contain all the options which matter for the given application. The format is the same as that of the `sdkconfig` file. Once `sdkconfig.defaults` is created, `sdkconfig` can be deleted and added to the ignore list of the revision control system (e.g. `.gitignore` file for git). Project build targets will automatically create `sdkconfig` file, populated with the settings from `sdkconfig.defaults` file, and the rest of the settings will be set to their default values. Note that when `make defconfig` is used, settings in sdkconfig will be overriden by the ones in `sdkconfig.defaults`. For more information, see 自定义 *sdkconfig* 的默认值.

3.8.3 Configuration Options Reference

Subsequent sections contain the list of available ESP-IDF options, automatically generated from Kconfig files. Note that depending on the options selected, some options listed here may not be visible by default in the interface of menuconfig.

By convention, all option names are upper case with underscores. When Kconfig generates sdkconfig and sdkconfig.h files, option names are prefixed with `CONFIG_`. So if an option `ENABLE_FOO` is defined in a Kconfig file and selected in menuconfig, then sdkconfig and sdkconfig.h files will have `CONFIG_ENABLE_FOO` defined. In this reference, option names are also prefixed with `CONFIG_`, same as in the source code.

SDK tool configuration

Contains:

- *CONFIG_TOOLPREFIX*
- *CONFIG_PYTHON*
- *CONFIG_MAKE_WARN_UNDEFINED_VARIABLES*

CONFIG_TOOLPREFIX

Compiler toolchain path/prefix

Found in: SDK tool configuration

The prefix/path that is used to call the toolchain. The default setting assumes a crosstool-ng gcc setup that is in your PATH.

CONFIG_PYTHON

Python 2 interpreter

Found in: SDK tool configuration

The executable name/path that is used to run python. On some systems Python 2.x may need to be invoked as python2.

(Note: This option is used with the GNU Make build system only, not idf.py or CMake-based builds.)

CONFIG_MAKE_WARN_UNDEFINED_VARIABLES

'make' warns on undefined variables

Found in: SDK tool configuration

Adds –warn-undefined-variables to MAKEFLAGS. This causes make to print a warning any time an undefined variable is referenced.

This option helps find places where a variable reference is misspelled or otherwise missing, but it can be unwanted if you have Makefiles which depend on undefined variables expanding to an empty string.

Application manager

Contains:

- *CONFIG_APP_COMPILE_TIME_DATE*
- *CONFIG_APP_EXCLUDE_PROJECT_VER_VAR*
- *CONFIG_APP_EXCLUDE_PROJECT_NAME_VAR*
- *CONFIG_APP_RETRIEVE_LEN_ELF_SHA*

CONFIG_APP_COMPILE_TIME_DATE

Use time/date stamp for app

Found in: Application manager

If set, then the app will be built with the current time/date stamp. It is stored in the app description structure. If not set, time/date stamp will be excluded from app image. This can be useful for getting the same binary image files made from the same source, but at different times.

CONFIG_APP_EXCLUDE_PROJECT_VER_VAR

Exclude PROJECT_VER from firmware image

Found in: Application manager

The PROJECT_VER variable from the build system will not affect the firmware image. This value will not be contained in the esp_app_desc structure.

CONFIG_APP_EXCLUDE_PROJECT_NAME_VAR

Exclude PROJECT_NAME from firmware image

Found in: Application manager

The PROJECT_NAME variable from the build system will not affect the firmware image. This value will not be contained in the esp_app_desc structure.

CONFIG_APP_RETRIEVE_LEN_ELF_SHA

The length of APP ELF SHA is stored in RAM(chars)

Found in: Application manager

At startup, the app will read this many hex characters from the embedded APP ELF SHA-256 hash value and store it in static RAM. This ensures the app ELF SHA-256 value is always available if it needs to be printed by the panic handler code. Changing this value will change the size of a static buffer, in bytes.

Bootloader config

Contains:

- *CONFIG_LOG_BOOTLOADER_LEVEL*
- *CONFIG_BOOTLOADER_SPI_WP_PIN*
- *CONFIG_BOOTLOADER_VDDSDIO_BOOST*
- *CONFIG_BOOTLOADER_FACTORY_RESET*
- *CONFIG_BOOTLOADER_APP_TEST*
- *CONFIG_BOOTLOADER_HOLD_TIME_GPIO*
- *CONFIG_BOOTLOADER_WDT_ENABLE*
- *CONFIG_APP_ROLLBACK_ENABLE*

CONFIG_LOG_BOOTLOADER_LEVEL

Bootloader log verbosity

Found in: Bootloader config

Specify how much output to see in bootloader logs.

Available options:

- No output (LOG_BOOTLOADER_LEVEL_NONE)
- Error (LOG_BOOTLOADER_LEVEL_ERROR)
- Warning (LOG_BOOTLOADER_LEVEL_WARN)
- Info (LOG_BOOTLOADER_LEVEL_INFO)
- Debug (LOG_BOOTLOADER_LEVEL_DEBUG)
- Verbose (LOG_BOOTLOADER_LEVEL_VERBOSE)

CONFIG_BOOTLOADER_SPI_WP_PIN

SPI Flash WP Pin when customising pins via eFuse (read help)

Found in: Bootloader config

This value is ignored unless flash mode is set to QIO or QOUT *and* the SPI flash pins have been overriden by setting the eFuses SPI_PAD_CONFIG_xxx.

When this is the case, the eFuse config only defines 3 of the 4 Quad I/O data pins. The WP pin (aka ESP32 pin "SD_DATA_3" or SPI flash pin "IO2") is not specified in eFuse. That pin number is compiled into the bootloader instead.

The default value (GPIO 7) is correct for WP pin on ESP32-D2WD integrated flash.

CONFIG_BOOTLOADER_VDDSDIO_BOOST

VDDSDIO LDO voltage

Found in: Bootloader config

If this option is enabled, and VDDSDIO LDO is set to 1.8V (using eFuse or MTDI bootstrapping pin), bootloader will change LDO settings to output 1.9V instead. This helps prevent flash chip from browning out during flash programming operations.

This option has no effect if VDDSDIO is set to 3.3V, or if the internal VDDSDIO regulator is disabled via eFuse.

Available options:

- 1.8V (BOOTLOADER_VDDSDIO_BOOST_1_8V)
- 1.9V (BOOTLOADER_VDDSDIO_BOOST_1_9V)

CONFIG_BOOTLOADER_FACTORY_RESET

GPIO triggers factory reset

Found in: Bootloader config

Allows to reset the device to factory settings: - clear one or more data partitions; - boot from "factory" partition. The factory reset will occur if there is a GPIO input pulled low while device starts up. See settings below.

CONFIG_BOOTLOADER_NUM_PIN_FACTORY_RESET

Number of the GPIO input for factory reset

Found in: Bootloader config > CONFIG_BOOTLOADER_FACTORY_RESET

The selected GPIO will be configured as an input with internal pull-up enabled. To trigger a factory reset, this GPIO must be pulled low on reset. Note that GPIO34-39 do not have an internal pullup and an external one must be provided.

CONFIG_BOOTLOADER_OTA_DATA_ERASE

Clear OTA data on factory reset (select factory partition)

Found in: Bootloader config > CONFIG_BOOTLOADER_FACTORY_RESET

The device will boot from "factory" partition (or OTA slot 0 if no factory partition is present) after a factory reset.

CONFIG_BOOTLOADER_DATA_FACTORY_RESET

Comma-separated names of partitions to clear on factory reset

Found in: Bootloader config > CONFIG_BOOTLOADER_FACTORY_RESET

Allows customers to select which data partitions will be erased while factory reset.

Specify the names of partitions as a comma-delimited with optional spaces for readability. (Like this: "nvs, phy_init, ···") Make sure that the name specified in the partition table and here are the same. Partitions of type "app" cannot be specified here.

CONFIG_BOOTLOADER_APP_TEST

GPIO triggers boot from test app partition

Found in: Bootloader config

Allows to run the test app from "TEST" partition. A boot from "test" partition will occur if there is a GPIO input pulled low while device starts up. See settings below.

CONFIG_BOOTLOADER_NUM_PIN_APP_TEST

Number of the GPIO input to boot TEST partition

Found in: Bootloader config > CONFIG_BOOTLOADER_APP_TEST

The selected GPIO will be configured as an input with internal pull-up enabled. To trigger a test app, this GPIO must be pulled low on reset. After the GPIO input is deactivated and the device reboots, the old application will boot. (factory or OTA[x]). Note that GPIO34-39 do not have an internal pullup and an external one must be provided.

CONFIG_BOOTLOADER_HOLD_TIME_GPIO

Hold time of GPIO for reset/test mode (seconds)

Found in: Bootloader config

The GPIO must be held low continuously for this period of time after reset before a factory reset or test partition boot (as applicable) is performed.

CONFIG_BOOTLOADER_WDT_ENABLE

Use RTC watchdog in start code

Found in: Bootloader config

Tracks the execution time of startup code. If the execution time is exceeded, the RTC_WDT will restart system. It is also useful to prevent a lock up in start code caused by an unstable power source. NOTE: Tracks the execution time starts from the bootloader code - re-set timeout, while selecting the source for slow_clk - and ends calling app_main. Re-set timeout is needed due to WDT uses a SLOW_CLK clock source. After changing a frequency slow_clk a time of WDT needs to re-set for new frequency. slow_clk depends on ESP32_RTC_CLOCK_SOURCE (INTERNAL_RC or EXTERNAL_CRYSTAL).

CONFIG_BOOTLOADER_WDT_DISABLE_IN_USER_CODE

Allows RTC watchdog disable in user code

Found in: Bootloader config > CONFIG_BOOTLOADER_WDT_ENABLE

If it is set, the client must itself reset or disable rtc_wdt in their code (app_main()). Otherwise rtc_wdt will be disabled before calling app_main function. Use function rtc_wdt_feed() for resetting counter of rtc_wdt. Use function rtc_wdt_disable() for disabling rtc_wdt.

CONFIG_BOOTLOADER_WDT_TIME_MS

Timeout for RTC watchdog (ms)

Found in: Bootloader config > CONFIG_BOOTLOADER_WDT_ENABLE

Verify that this parameter is correct and more then the execution time. Pay attention to options such as reset to factory, trigger test partition and encryption on boot - these options can increase the execution time. Note: RTC_WDT will reset while encryption operations will be performed.

CONFIG_APP_ROLLBACK_ENABLE

Enable app rollback support

Found in: Bootloader config

After updating the app, the bootloader runs a new app with the "ESP_OTA_IMG_PENDING_VERIFY" state set. This state prevents the re-run of this app. After the first boot of the new app in the user code, the function should be called to confirm the operability of the app or vice versa about its non-operability. If the app is working, then it is marked as valid. Otherwise, it is marked as not valid and rolls back to the previous working app. A reboot is performed, and the app is booted before the software update. Note: If during the first boot a new app the power goes out or the WDT works, then roll back will happen. Rollback is possible only between the apps with the same security versions.

CONFIG_APP_ANTI_ROLLBACK

Enable app anti-rollback support

Found in: Bootloader config > CONFIG_APP_ROLLBACK_ENABLE

This option prevents rollback to previous firmware/application image with lower security version.

CONFIG_APP_SECURE_VERSION

eFuse secure version of app

Found in: Bootloader config > CONFIG_APP_ROLLBACK_ENABLE > CONFIG_APP_ANTI_ROLLBACK

The secure version is the sequence number stored in the header of each firmware. The security version is set in the bootloader, version is recorded in the eFuse field as the number of set ones. The allocated number of bits in the efuse field for storing the security version is limited (see APP_SECURE_VERSION_SIZE_EFUSE_FIELD option).

Bootloader: When bootloader selects an app to boot, an app is selected that has a security version greater or equal that recorded in eFuse field. The app is booted with a higher (or equal) secure version.

The security version is worth increasing if in previous versions there is a significant vulnerability and their use is not acceptable.

Your partition table should has a scheme with ota_0 + ota_1 (without factory).

CONFIG_APP_SECURE_VERSION_SIZE_EFUSE_FIELD

Size of the efuse secure version field

Found in: Bootloader config > CONFIG_APP_ROLLBACK_ENABLE > CONFIG_APP_ANTI_ROLLBACK

The size of the efuse secure version field. Its length is limited to 32 bits. This determines how many times the security version can be increased.

CONFIG_EFUSE_SECURE_VERSION_EMULATE

Emulate operations with efuse secure version(only test)

Found in: Bootloader config > CONFIG_APP_ROLLBACK_ENABLE > CONFIG_APP_ANTI_ROLLBACK

This option allow emulate read/write operations with efuse secure version. It allow to test anti-rollback implemention without permanent write eFuse bits. In partition table should be exist this partition *emul_efuse, data, 5, , 0x2000*.

Security features

Contains:

- *CONFIG_SECURE_SIGNED_APPS_NO_SECURE_BOOT*
- *CONFIG_SECURE_BOOT_ENABLED*
- *CONFIG_SECURE_BOOT_BUILD_SIGNED_BINARIES*
- *CONFIG_SECURE_BOOT_VERIFICATION_KEY*
- *CONFIG_SECURE_BOOTLOADER_KEY_ENCODING*

- *CONFIG_SECURE_BOOT_INSECURE*
- *CONFIG_FLASH_ENCRYPTION_ENABLED*
- *Potentially insecure options*
- *CONFIG_FLASH_ENCRYPTION_DISABLE_PLAINTEXT*
- *CONFIG_SECURE_DISABLE_ROM_DL_MODE*

CONFIG_SECURE_SIGNED_APPS_NO_SECURE_BOOT

Require signed app images

Found in: Security features

Require apps to be signed to verify their integrity.

This option uses the same app signature scheme as hardware secure boot, but unlike hardware secure boot it does not prevent the bootloader from being physically updated. This means that the device can be secured against remote network access, but not physical access. Compared to using hardware Secure Boot this option is much simpler to implement.

CONFIG_SECURE_SIGNED_ON_BOOT_NO_SECURE_BOOT

Bootloader verifies app signatures

Found in: Security features > CONFIG_SECURE_SIGNED_APPS_NO_SECURE_BOOT

If this option is set, the bootloader will be compiled with code to verify that an app is signed before booting it.

If hardware secure boot is enabled, this option is always enabled and cannot be disabled. If hardware secure boot is not enabled, this option doesn' t add significant security by itself so most users will want to leave it disabled.

CONFIG_SECURE_SIGNED_ON_UPDATE_NO_SECURE_BOOT

Verify app signature on update

Found in: Security features > CONFIG_SECURE_SIGNED_APPS_NO_SECURE_BOOT

If this option is set, any OTA updated apps will have the signature verified before being considered valid.

When enabled, the signature is automatically checked whenever the esp_ota_ops.h APIs are used for OTA updates, or esp_image_format.h APIs are used to verify apps.

If hardware secure boot is enabled, this option is always enabled and cannot be disabled. If hardware secure boot is not enabled, this option still adds significant security against network-based attackers by preventing spoofing of OTA updates.

CONFIG_SECURE_BOOT_ENABLED

Enable hardware secure boot in bootloader (READ DOCS FIRST)

Found in: Security features

Build a bootloader which enables secure boot on first boot.

Once enabled, secure boot will not boot a modified bootloader. The bootloader will only load a partition table or boot an app if the data has a verified digital signature. There are implications for reflashing updated apps once secure boot is enabled.

When enabling secure boot, JTAG and ROM BASIC Interpreter are permanently disabled by default.

Refer to *Secure Boot* before enabling.

CONFIG_SECURE_BOOTLOADER_MODE

Secure bootloader mode

Found in: Security features > CONFIG_SECURE_BOOT_ENABLED

Available options:

- One-time flash (SECURE_BOOTLOADER_ONE_TIME_FLASH)

  On first boot, the bootloader will generate a key which is not readable externally or by software. A digest is generated from the bootloader image itself. This digest will be verified on each subsequent boot.

  Enabling this option means that the bootloader cannot be changed after the first time it is booted.

- Reflashable (SECURE_BOOTLOADER_REFLASHABLE)

  Generate a reusable secure bootloader key, derived (via SHA-256) from the secure boot signing key.

  This allows the secure bootloader to be re-flashed by anyone with access to the secure boot signing key.

  This option is less secure than one-time flash, because a leak of the digest key from one device allows reflashing of any device that uses it.

CONFIG_SECURE_BOOT_BUILD_SIGNED_BINARIES

Sign binaries during build

Found in: Security features

Once secure boot or signed app requirement is enabled, app images are required to be signed.

If enabled (default), these binary files are signed as part of the build process. The file named in "Secure boot private signing key" will be used to sign the image.

If disabled, unsigned app/partition data will be built. They must be signed manually using espsecure.py (for example, on a remote signing server.)

CONFIG_SECURE_BOOT_SIGNING_KEY

Secure boot private signing key

Found in: Security features > CONFIG_SECURE_BOOT_BUILD_SIGNED_BINARIES

Path to the key file used to sign app images.

Key file is an ECDSA private key (NIST256p curve) in PEM format.

Path is evaluated relative to the project directory.

You can generate a new signing key by running the following command: espsecure.py generate_signing_key secure_boot_signing_key.pem

See *Secure Boot* for details.

CONFIG_SECURE_BOOT_VERIFICATION_KEY

Secure boot public signature verification key

Found in: Security features

Path to a public key file used to verify signed images. This key is compiled into the bootloader and/or app, to verify app images.

Key file is in raw binary format, and can be extracted from a PEM formatted private key using the espsecure.py extract_public_key command.

Refer to *Secure Boot* before enabling.

CONFIG_SECURE_BOOTLOADER_KEY_ENCODING

Hardware Key Encoding

Found in: Security features

In reflashable secure bootloader mode, a hardware key is derived from the signing key (with SHA-256) and can be written to eFuse with espefuse.py.

Normally this is a 256-bit key, but if 3/4 Coding Scheme is used on the device then the eFuse key is truncated to 192 bits.

This configuration item doesn' t change any firmware code, it only changes the size of key binary which is generated at build time.

Available options:

- No encoding (256 bit key) (SECURE_BOOTLOADER_KEY_ENCODING_256BIT)
- 3/4 encoding (192 bit key) (SECURE_BOOTLOADER_KEY_ENCODING_192BIT)

CONFIG_SECURE_BOOT_INSECURE

Allow potentially insecure options

Found in: Security features

You can disable some of the default protections offered by secure boot, in order to enable testing or a custom combination of security features.

Only enable these options if you are very sure.

Refer to *Secure Boot* before enabling.

CONFIG_FLASH_ENCRYPTION_ENABLED

Enable flash encryption on boot (READ DOCS FIRST)

Found in: Security features

If this option is set, flash contents will be encrypted by the bootloader on first boot.

Note: After first boot, the system will be permanently encrypted. Re-flashing an encrypted system is complicated and not always possible.

Read *Flash Encryption* before enabling.

CONFIG_FLASH_ENCRYPTION_INSECURE

Allow potentially insecure options

Found in: Security features > CONFIG_FLASH_ENCRYPTION_ENABLED

You can disable some of the default protections offered by flash encryption, in order to enable testing or a custom combination of security features.

Only enable these options if you are very sure.

Refer to *Secure Boot* and *Flash Encryption* for details.

Potentially insecure options

Contains:

- *CONFIG_SECURE_BOOT_ALLOW_ROM_BASIC*
- *CONFIG_SECURE_BOOT_ALLOW_JTAG*
- *CONFIG_SECURE_BOOT_ALLOW_SHORT_APP_PARTITION*
- *CONFIG_FLASH_ENCRYPTION_UART_BOOTLOADER_ALLOW_ENCRYPT*
- *CONFIG_FLASH_ENCRYPTION_UART_BOOTLOADER_ALLOW_DECRYPT*
- *CONFIG_FLASH_ENCRYPTION_UART_BOOTLOADER_ALLOW_CACHE*

CONFIG_SECURE_BOOT_ALLOW_ROM_BASIC

Leave ROM BASIC Interpreter available on reset

Found in: Security features > Potentially insecure options

By default, the BASIC ROM Console starts on reset if no valid bootloader is read from the flash.

When either flash encryption or secure boot are enabled, the default is to disable this BASIC fallback mode permanently via eFuse.

If this option is set, this eFuse is not burned and the BASIC ROM Console may remain accessible. Only set this option in testing environments.

CONFIG_SECURE_BOOT_ALLOW_JTAG

Allow JTAG Debugging

Found in: Security features > Potentially insecure options

If not set (default), the bootloader will permanently disable JTAG (across entire chip) on first boot when either secure boot or flash encryption is enabled.

Setting this option leaves JTAG on for debugging, which negates all protections of flash encryption and some of the protections of secure boot.

Only set this option in testing environments.

CONFIG_SECURE_BOOT_ALLOW_SHORT_APP_PARTITION

Allow app partition length not 64KB aligned

Found in: Security features > Potentially insecure options

If not set (default), app partition size must be a multiple of 64KB. App images are padded to 64KB length, and the bootloader checks any trailing bytes after the signature (before the next 64KB boundary) have not been written. This is because flash cache maps entire 64KB pages into the address space. This prevents an attacker from appending unverified data after the app image in the flash, causing it to be mapped into the address space.

Setting this option allows the app partition length to be unaligned, and disables padding of the app image to this length. It is generally not recommended to set this option, unless you have a legacy partitioning scheme which doesn't support 64KB aligned partition lengths.

CONFIG_FLASH_ENCRYPTION_UART_BOOTLOADER_ALLOW_ENCRYPT

Leave UART bootloader encryption enabled

Found in: Security features > Potentially insecure options

If not set (default), the bootloader will permanently disable UART bootloader encryption access on first boot. If set, the UART bootloader will still be able to access hardware encryption.

It is recommended to only set this option in testing environments.

CONFIG_FLASH_ENCRYPTION_UART_BOOTLOADER_ALLOW_DECRYPT

Leave UART bootloader decryption enabled

Found in: Security features > Potentially insecure options

If not set (default), the bootloader will permanently disable UART bootloader decryption access on first boot. If set, the UART bootloader will still be able to access hardware decryption.

Only set this option in testing environments. Setting this option allows complete bypass of flash encryption.

CONFIG_FLASH_ENCRYPTION_UART_BOOTLOADER_ALLOW_CACHE

Leave UART bootloader flash cache enabled

Found in: Security features > Potentially insecure options

If not set (default), the bootloader will permanently disable UART bootloader flash cache access on first boot. If set, the UART bootloader will still be able to access the flash cache.

Only set this option in testing environments.

CONFIG_FLASH_ENCRYPTION_DISABLE_PLAINTEXT

Disable serial reflashing of plaintext firmware

Found in: Security features

If this option is enabled, flash encryption is permanently enabled after first boot by write-protecting the FLASH_CRYPT_CNT efuse. This is the recommended configuration for a secure production system.

If this option is disabled, FLASH_CRYPT_CNT is left writeable and up to 4 plaintext re-flashes are allowed. An attacker with physical access will be able to read out encrypted flash contents until all plaintext re-flashes have been used up.

If this option is disabled and hardware Secure Boot is enabled, Secure Boot must be configured in Reflashable mode so that a new Secure Boot digest can be flashed at the same time as plaintext firmware. This combination is not secure and should not be used for a production system.

CONFIG_SECURE_DISABLE_ROM_DL_MODE

Permanently disable ROM Download Mode

Found in: Security features

If set, during startup the app will burn an eFuse bit to permanently disable the UART ROM Download Mode. This prevents any future use of esptool.py, espefuse.py and similar tools.

Once disabled, if the SoC is booted with strapping pins set for ROM Download Mode then an error is printed instead.

It is recommended to enable this option in any production application where Flash Encryption and/or Secure Boot is enabled and access to Download Mode is not required.

It is also possible to permanently disable Download Mode by calling esp_efuse_disable_rom_download_mode() at runtime.

Serial flasher config

Contains:

- *CONFIG_ESPTOOLPY_PORT*
- *CONFIG_ESPTOOLPY_BAUD*
- *CONFIG_ESPTOOLPY_BAUD_OTHER_VAL*
- *CONFIG_ESPTOOLPY_COMPRESSED*

- *CONFIG_FLASHMODE*
- *CONFIG_ESPTOOLPY_FLASHFREQ*
- *CONFIG_ESPTOOLPY_FLASHSIZE*
- *CONFIG_ESPTOOLPY_FLASHSIZE_DETECT*
- *CONFIG_ESPTOOLPY_BEFORE*
- *CONFIG_ESPTOOLPY_AFTER*
- *CONFIG_MONITOR_BAUD*
- *CONFIG_MONITOR_BAUD_OTHER_VAL*

CONFIG_ESPTOOLPY_PORT

Default serial port

Found in: Serial flasher config

The serial port that' s connected to the ESP chip. This can be overridden by setting the ESPPORT environment variable.

This value is ignored when using the CMake-based build system or idf.py.

CONFIG_ESPTOOLPY_BAUD

Default baud rate

Found in: Serial flasher config

Default baud rate to use while communicating with the ESP chip. Can be overridden by setting the ESPBAUD variable.

This value is ignored when using the CMake-based build system or idf.py.

Available options:

- 115200 baud (ESPTOOLPY_BAUD_115200B)
- 230400 baud (ESPTOOLPY_BAUD_230400B)
- 921600 baud (ESPTOOLPY_BAUD_921600B)
- 2Mbaud (ESPTOOLPY_BAUD_2MB)
- Other baud rate (ESPTOOLPY_BAUD_OTHER)

CONFIG_ESPTOOLPY_BAUD_OTHER_VAL

Other baud rate value

Found in: Serial flasher config

CONFIG_ESPTOOLPY_COMPRESSED

Use compressed upload

Found in: Serial flasher config

The flasher tool can send data compressed using zlib, letting the ROM on the ESP chip decompress it on the fly before flashing it. For most payloads, this should result in a speed increase.

CONFIG_FLASHMODE

Flash SPI mode

Found in: Serial flasher config

Mode the flash chip is flashed in, as well as the default mode for the binary to run in.

Available options:

- QIO (FLASHMODE_QIO)
- QOUT (FLASHMODE_QOUT)
- DIO (FLASHMODE_DIO)
- DOUT (FLASHMODE_DOUT)

CONFIG_ESPTOOLPY_FLASHFREQ

Flash SPI speed

Found in: Serial flasher config

The SPI flash frequency to be used.

Available options:

- 80 MHz (ESPTOOLPY_FLASHFREQ_80M)
- 40 MHz (ESPTOOLPY_FLASHFREQ_40M)
- 26 MHz (ESPTOOLPY_FLASHFREQ_26M)
- 20 MHz (ESPTOOLPY_FLASHFREQ_20M)

CONFIG_ESPTOOLPY_FLASHSIZE

Flash size

Found in: Serial flasher config

SPI flash size, in megabytes

Available options:

- 1 MB (ESPTOOLPY_FLASHSIZE_1MB)
- 2 MB (ESPTOOLPY_FLASHSIZE_2MB)
- 4 MB (ESPTOOLPY_FLASHSIZE_4MB)
- 8 MB (ESPTOOLPY_FLASHSIZE_8MB)
- 16 MB (ESPTOOLPY_FLASHSIZE_16MB)

CONFIG_ESPTOOLPY_FLASHSIZE_DETECT

Detect flash size when flashing bootloader

Found in: Serial flasher config

If this option is set, 'make flash' targets will automatically detect the flash size and update the bootloader image when flashing.

CONFIG_ESPTOOLPY_BEFORE

Before flashing

Found in: Serial flasher config

Configure whether esptool.py should reset the ESP32 before flashing.

Automatic resetting depends on the RTS & DTR signals being wired from the serial port to the ESP32. Most USB development boards do this internally.

Available options:

- Reset to bootloader (ESPTOOLPY_BEFORE_RESET)
- No reset (ESPTOOLPY_BEFORE_NORESET)

CONFIG_ESPTOOLPY_AFTER

After flashing

Found in: Serial flasher config

Configure whether esptool.py should reset the ESP32 after flashing.

Automatic resetting depends on the RTS & DTR signals being wired from the serial port to the ESP32. Most USB development boards do this internally.

Available options:

- Reset after flashing (ESPTOOLPY_AFTER_RESET)
- Stay in bootloader (ESPTOOLPY_AFTER_NORESET)

CONFIG_MONITOR_BAUD

'make monitor' baud rate

Found in: Serial flasher config

Baud rate to use when running 'make monitor' to view serial output from a running chip.

Can override by setting the MONITORBAUD environment variable.

Available options:

- 9600 bps (MONITOR_BAUD_9600B)
- 57600 bps (MONITOR_BAUD_57600B)
- 115200 bps (MONITOR_BAUD_115200B)
- 230400 bps (MONITOR_BAUD_230400B)
- 921600 bps (MONITOR_BAUD_921600B)
- 2 Mbps (MONITOR_BAUD_2MB)
- Custom baud rate (MONITOR_BAUD_OTHER)

CONFIG_MONITOR_BAUD_OTHER_VAL

Custom baud rate value

Found in: Serial flasher config

Partition Table

Contains:

- *CONFIG_PARTITION_TABLE_TYPE*
- *CONFIG_PARTITION_TABLE_CUSTOM_FILENAME*
- *CONFIG_PARTITION_TABLE_OFFSET*

- *CONFIG_PARTITION_TABLE_MD5*

CONFIG_PARTITION_TABLE_TYPE

Partition Table

Found in: Partition Table

The partition table to flash to the ESP32. The partition table determines where apps, data and other resources are expected to be found.

The predefined partition table CSV descriptions can be found in the components/partition_table directory. Otherwise it' s possible to create a new custom partition CSV for your application.

Available options:

- Single factory app, no OTA (PARTITION_TABLE_SINGLE_APP)
- Factory app, two OTA definitions (PARTITION_TABLE_TWO_OTA)
- Custom partition table CSV (PARTITION_TABLE_CUSTOM)

CONFIG_PARTITION_TABLE_CUSTOM_FILENAME

Custom partition CSV file

Found in: Partition Table

Name of the custom partition CSV filename. This path is evaluated relative to the project root directory.

CONFIG_PARTITION_TABLE_OFFSET

Offset of partition table

Found in: Partition Table

The address of partition table (by default 0x8000). Allows you to move the partition table, it gives more space for the bootloader. Note that the bootloader and app will both need to be compiled with the same PARTITION_TABLE_OFFSET value.

This number should be a multiple of 0x1000.

Note that partition offsets in the partition table CSV file may need to be changed if this value is set to a higher value. To have each partition offset adapt to the configured partition table offset, leave all partition offsets blank in the CSV file.

CONFIG_PARTITION_TABLE_MD5

Generate an MD5 checksum for the partition table

Found in: Partition Table

Generate an MD5 checksum for the partition table for protecting the integrity of the table. The generation should be turned off for legacy bootloaders which cannot recognize the MD5 checksum in the partition table.

Compiler options

Contains:

- *CONFIG_OPTIMIZATION_COMPILER*
- *CONFIG_OPTIMIZATION_ASSERTION_LEVEL*
- *CONFIG_CXX_EXCEPTIONS*
- *CONFIG_STACK_CHECK_MODE*
- *CONFIG_WARN_WRITE_STRINGS*
- *CONFIG_DISABLE_GCC8_WARNINGS*

CONFIG_OPTIMIZATION_COMPILER

Optimization Level

Found in: Compiler options

This option sets compiler optimization level (gcc -O argument).

- for "Release" setting, -Os flag is added to CFLAGS.
- for "Debug" setting, -Og flag is added to CFLAGS.

"Release" with -Os produces smaller & faster compiled code but it may be harder to correlated code addresses to source files when debugging.

To add custom optimization settings, set CFLAGS and/or CPPFLAGS in project makefile, before including $(IDF_PATH)/make/project.mk. Note that custom optimization levels may be unsupported.

Available options:

- Debug (-Og) (OPTIMIZATION_LEVEL_DEBUG)
- Release (-Os) (OPTIMIZATION_LEVEL_RELEASE)

CONFIG_OPTIMIZATION_ASSERTION_LEVEL

Assertion level

Found in: Compiler options

Assertions can be:

- Enabled. Failure will print verbose assertion details. This is the default.
- Set to "silent" to save code size (failed assertions will abort() but user needs to use the aborting address to find the line number with the failed assertion.)
- Disabled entirely (not recommended for most configurations.) -DNDEBUG is added to CPPFLAGS in this case.

Available options:

- Enabled (OPTIMIZATION_ASSERTIONS_ENABLED)

  Enable assertions. Assertion content and line number will be printed on failure.

- Silent (saves code size) (OPTIMIZATION_ASSERTIONS_SILENT)

  Enable silent assertions. Failed assertions will abort(), user needs to use the aborting address to find the line number with the failed assertion.

- Disabled (sets -DNDEBUG) (OPTIMIZATION_ASSERTIONS_DISABLED)

  If assertions are disabled, -DNDEBUG is added to CPPFLAGS.

CONFIG_CXX_EXCEPTIONS

Enable C++ exceptions

Found in: Compiler options

Enabling this option compiles all IDF C++ files with exception support enabled.

Disabling this option disables C++ exception support in all compiled files, and any libstdc++ code which throws an exception will abort instead.

Enabling this option currently adds an additional ~500 bytes of heap overhead when an exception is thrown in user code for the first time.

Contains:

- *CONFIG_CXX_EXCEPTIONS_EMG_POOL_SIZE*

CONFIG_CXX_EXCEPTIONS_EMG_POOL_SIZE

Emergency Pool Size

Found in: Compiler options > CONFIG_CXX_EXCEPTIONS

Size (in bytes) of the emergency memory pool for C++ exceptions. This pool will be used to allocate memory for thrown exceptions when there is not enough memory on the heap.

CONFIG_STACK_CHECK_MODE

Stack smashing protection mode

Found in: Compiler options

Stack smashing protection mode. Emit extra code to check for buffer overflows, such as stack smashing attacks. This is done by adding a guard variable to functions with vulnerable objects. The guards are initialized when a function is entered and then checked when the function exits. If a guard check fails, program is halted. Protection has the following modes:

- In NORMAL mode (GCC flag: -fstack-protector) only functions that call alloca, and functions with buffers larger than 8 bytes are protected.
- STRONG mode (GCC flag: -fstack-protector-strong) is like NORMAL, but includes additional functions to be protected – those that have local array definitions, or have references to local frame addresses.
- In OVERALL mode (GCC flag: -fstack-protector-all) all functions are protected.

Modes have the following impact on code performance and coverage:

- performance: NORMAL > STRONG > OVERALL
- coverage: NORMAL < STRONG < OVERALL

Available options:

- None (STACK_CHECK_NONE)
- Normal (STACK_CHECK_NORM)
- Strong (STACK_CHECK_STRONG)
- Overall (STACK_CHECK_ALL)

CONFIG_WARN_WRITE_STRINGS

Enable -Wwrite-strings warning flag

Found in: Compiler options

Adds -Wwrite-strings flag for the C/C++ compilers.

For C, this gives string constants the type `const char[]` so that copying the address of one into a non-const `char \*` pointer produces a warning. This warning helps to find at compile time code that tries to write into a string constant.

For C++, this warns about the deprecated conversion from string literals to `char \*`.

CONFIG_DISABLE_GCC8_WARNINGS

Disable new warnings introduced in GCC 6 - 8

Found in: Compiler options

Enable this option if using GCC 6 or newer, and wanting to disable warnings which don' t appear with GCC 5.

Component config

Contains:

- *Application Level Tracing*
- *CONFIG_AWS_IOT_SDK*
- *Bluetooth*
- *CONFIG_BLE_MESH*
- *Driver configurations*
- *eFuse Bit Manager*
- *ESP32-specific*
- *Wi-Fi*
- *PHY*
- *Power Management*
- *ADC-Calibration*
- *Event Loop Library*
- *ESP HTTP client*
- *HTTP Server*
- *ESP HTTPS OTA*
- *Core dump*
- *Ethernet*
- *FAT Filesystem support*
- *Modbus configuration*
- *FreeRTOS*

- *Heap memory debugging*
- *libsodium*
- *Log output*
- *LWIP*
- *mbedTLS*
- *mDNS*
- *ESP-MQTT Configurations*
- *NVS*
- *OpenSSL*
- *PThreads*
- *SPI Flash driver*
- *SPIFFS Configuration*
- *TCP/IP Adapter*
- *Unity unit testing library*
- *Virtual file system*
- *Wear Levelling*
- *Wi-Fi Provisioning Manager*
- *Supplicant*

Application Level Tracing

Contains:

- *CONFIG_ESP32_APPTRACE_DESTINATION*
- *CONFIG_ESP32_APPTRACE_ONPANIC_HOST_FLUSH_TMO*
- *CONFIG_ESP32_APPTRACE_POSTMORTEM_FLUSH_TRAX_THRESH*
- *CONFIG_ESP32_APPTRACE_PENDING_DATA_SIZE_MAX*
- *FreeRTOS SystemView Tracing*
- *CONFIG_ESP32_GCOV_ENABLE*

CONFIG_ESP32_APPTRACE_DESTINATION

Data Destination

Found in: Component config > Application Level Tracing

Select destination for application trace: trace memory or none (to disable).

Available options:

- Trace memory (ESP32_APPTRACE_DEST_TRAX)
- None (ESP32_APPTRACE_DEST_NONE)

CONFIG_ESP32_APPTRACE_ONPANIC_HOST_FLUSH_TMO

Timeout for flushing last trace data to host on panic

Found in: Component config > Application Level Tracing

Timeout for flushing last trace data to host in case of panic. In ms. Use -1 to disable timeout and wait forever.

CONFIG_ESP32_APPTRACE_POSTMORTEM_FLUSH_TRAX_THRESH

Threshold for flushing last trace data to host on panic

Found in: Component config > Application Level Tracing

Threshold for flushing last trace data to host on panic in post-mortem mode. This is minimal amount of data needed to perform flush. In bytes.

CONFIG_ESP32_APPTRACE_PENDING_DATA_SIZE_MAX

Size of the pending data buffer

Found in: Component config > Application Level Tracing

Size of the buffer for events in bytes. It is useful for buffering events from the time critical code (scheduler, ISRs etc). If this parameter is 0 then events will be discarded when main HW buffer is full.

FreeRTOS SystemView Tracing

Contains:

- *CONFIG_SYSVIEW_ENABLE*

CONFIG_SYSVIEW_ENABLE

SystemView Tracing Enable

Found in: Component config > Application Level Tracing > FreeRTOS SystemView Tracing

Enables supporrt for SEGGER SystemView tracing functionality.

CONFIG_SYSVIEW_TS_SOURCE

Timer to use as timestamp source

Found in: Component config > Application Level Tracing > FreeRTOS SystemView Tracing > CONFIG_SYSVIEW_ENABLE

SystemView needs to use a hardware timer as the source of timestamps when tracing. This option selects the timer for it.

Available options:

- CPU cycle counter (CCOUNT) (SYSVIEW_TS_SOURCE_CCOUNT)
- Timer 0, Group 0 (SYSVIEW_TS_SOURCE_TIMER_00)
- Timer 1, Group 0 (SYSVIEW_TS_SOURCE_TIMER_01)
- Timer 0, Group 1 (SYSVIEW_TS_SOURCE_TIMER_10)
- Timer 1, Group 1 (SYSVIEW_TS_SOURCE_TIMER_11)
- esp_timer high resolution timer (SYSVIEW_TS_SOURCE_ESP_TIMER)

CONFIG_SYSVIEW_MAX_TASKS

Maximum supported tasks

Found in: Component config > Application Level Tracing > FreeRTOS SystemView Tracing > CONFIG_SYSVIEW_ENABLE

Configures maximum supported tasks in sysview debug

CONFIG_SYSVIEW_EVT_OVERFLOW_ENABLE

Trace Buffer Overflow Event

Found in: Component config > Application Level Tracing > FreeRTOS SystemView Tracing > CONFIG_SYSVIEW_ENABLE

Enables "Trace Buffer Overflow" event.

CONFIG_SYSVIEW_EVT_ISR_ENTER_ENABLE

ISR Enter Event

Found in: *Component config* > *Application Level Tracing* > *FreeRTOS SystemView Tracing* > *CONFIG_SYSVIEW_ENABLE*

Enables "ISR Enter" event.

CONFIG_SYSVIEW_EVT_ISR_EXIT_ENABLE

ISR Exit Event

Found in: *Component config* > *Application Level Tracing* > *FreeRTOS SystemView Tracing* > *CONFIG_SYSVIEW_ENABLE*

Enables "ISR Exit" event.

CONFIG_SYSVIEW_EVT_ISR_TO_SCHEDULER_ENABLE

ISR Exit to Scheduler Event

Found in: *Component config* > *Application Level Tracing* > *FreeRTOS SystemView Tracing* > *CONFIG_SYSVIEW_ENABLE*

Enables "ISR to Scheduler" event.

CONFIG_SYSVIEW_EVT_TASK_START_EXEC_ENABLE

Task Start Execution Event

Found in: *Component config* > *Application Level Tracing* > *FreeRTOS SystemView Tracing* > *CONFIG_SYSVIEW_ENABLE*

Enables "Task Start Execution" event.

CONFIG_SYSVIEW_EVT_TASK_STOP_EXEC_ENABLE

Task Stop Execution Event

Found in: *Component config* > *Application Level Tracing* > *FreeRTOS SystemView Tracing* > *CONFIG_SYSVIEW_ENABLE*

Enables "Task Stop Execution" event.

CONFIG_SYSVIEW_EVT_TASK_START_READY_ENABLE

Task Start Ready State Event

Found in: Component config > Application Level Tracing > FreeRTOS SystemView Tracing > CONFIG_SYSVIEW_ENABLE

Enables "Task Start Ready State" event.

CONFIG_SYSVIEW_EVT_TASK_STOP_READY_ENABLE

Task Stop Ready State Event

Found in: Component config > Application Level Tracing > FreeRTOS SystemView Tracing > CONFIG_SYSVIEW_ENABLE

Enables "Task Stop Ready State" event.

CONFIG_SYSVIEW_EVT_TASK_CREATE_ENABLE

Task Create Event

Found in: Component config > Application Level Tracing > FreeRTOS SystemView Tracing > CONFIG_SYSVIEW_ENABLE

Enables "Task Create" event.

CONFIG_SYSVIEW_EVT_TASK_TERMINATE_ENABLE

Task Terminate Event

Found in: Component config > Application Level Tracing > FreeRTOS SystemView Tracing > CONFIG_SYSVIEW_ENABLE

Enables "Task Terminate" event.

CONFIG_SYSVIEW_EVT_IDLE_ENABLE

System Idle Event

Found in: Component config > Application Level Tracing > FreeRTOS SystemView Tracing > CONFIG_SYSVIEW_ENABLE

Enables "System Idle" event.

CONFIG_SYSVIEW_EVT_TIMER_ENTER_ENABLE

Timer Enter Event

Found in: *Component config* > *Application Level Tracing* > *FreeRTOS SystemView Tracing* > *CONFIG_SYSVIEW_ENABLE*

Enables "Timer Enter" event.

CONFIG_SYSVIEW_EVT_TIMER_EXIT_ENABLE

Timer Exit Event

Found in: *Component config* > *Application Level Tracing* > *FreeRTOS SystemView Tracing* > *CONFIG_SYSVIEW_ENABLE*

Enables "Timer Exit" event.

CONFIG_ESP32_GCOV_ENABLE

GCOV to Host Enable

Found in: *Component config* > *Application Level Tracing*

Enables support for GCOV data transfer to host.

CONFIG_AWS_IOT_SDK

Amazon Web Services IoT Platform

Found in: *Component config*

Select this option to enable support for the AWS IoT platform, via the esp-idf component for the AWS IoT Device C SDK.

Contains:

- *CONFIG_AWS_IOT_MQTT_HOST*
- *CONFIG_AWS_IOT_MQTT_PORT*
- *CONFIG_AWS_IOT_MQTT_TX_BUF_LEN*
- *CONFIG_AWS_IOT_MQTT_RX_BUF_LEN*
- *CONFIG_AWS_IOT_MQTT_NUM_SUBSCRIBE_HANDLERS*
- *CONFIG_AWS_IOT_MQTT_MIN_RECONNECT_WAIT_INTERVAL*
- *CONFIG_AWS_IOT_MQTT_MAX_RECONNECT_WAIT_INTERVAL*

- *Thing Shadow*

CONFIG_AWS_IOT_MQTT_HOST

AWS IoT Endpoint Hostname

Found in: Component config > CONFIG_AWS_IOT_SDK

Default endpoint host name to connect to AWS IoT MQTT/S gateway

This is the custom endpoint hostname and is specific to an AWS IoT account. You can find it by logging into your AWS IoT Console and clicking the Settings button. The endpoint hostname is shown under the "Custom Endpoint" heading on this page.

If you need per-device hostnames for different regions or accounts, you can override the default hostname in your app.

CONFIG_AWS_IOT_MQTT_PORT

AWS IoT MQTT Port

Found in: Component config > CONFIG_AWS_IOT_SDK

Default port number to connect to AWS IoT MQTT/S gateway

If you need per-device port numbers for different regions, you can override the default port number in your app.

CONFIG_AWS_IOT_MQTT_TX_BUF_LEN

MQTT TX Buffer Length

Found in: Component config > CONFIG_AWS_IOT_SDK

Maximum MQTT transmit buffer size. This is the maximum MQTT message length (including protocol overhead) which can be sent.

Sending longer messages will fail.

CONFIG_AWS_IOT_MQTT_RX_BUF_LEN

MQTT RX Buffer Length

Found in: Component config > CONFIG_AWS_IOT_SDK

Maximum MQTT receive buffer size. This is the maximum MQTT message length (including protocol overhead) which can be received.

Longer messages are dropped.

CONFIG_AWS_IOT_MQTT_NUM_SUBSCRIBE_HANDLERS

Maximum MQTT Topic Filters

Found in: Component config > CONFIG_AWS_IOT_SDK

Maximum number of concurrent MQTT topic filters.

CONFIG_AWS_IOT_MQTT_MIN_RECONNECT_WAIT_INTERVAL

Auto reconnect initial interval (ms)

Found in: Component config > CONFIG_AWS_IOT_SDK

Initial delay before making first reconnect attempt, if the AWS IoT connection fails. Client will perform exponential backoff, starting from this value.

CONFIG_AWS_IOT_MQTT_MAX_RECONNECT_WAIT_INTERVAL

Auto reconnect maximum interval (ms)

Found in: Component config > CONFIG_AWS_IOT_SDK

Maximum delay between reconnection attempts. If the exponentially increased delay interval reaches this value, the client will stop automatically attempting to reconnect.

Thing Shadow

Contains:

- *CONFIG_AWS_IOT_OVERRIDE_THING_SHADOW_RX_BUFFER*
- *CONFIG_AWS_IOT_SHADOW_MAX_SIZE_OF_UNIQUE_CLIENT_ID_BYTES*
- *CONFIG_AWS_IOT_SHADOW_MAX_SIMULTANEOUS_ACKS*
- *CONFIG_AWS_IOT_SHADOW_MAX_SIMULTANEOUS_THINGNAMES*
- *CONFIG_AWS_IOT_SHADOW_MAX_JSON_TOKEN_EXPECTED*
- *CONFIG_AWS_IOT_SHADOW_MAX_SHADOW_TOPIC_LENGTH_WITHOUT_THINGNAME*
- *CONFIG_AWS_IOT_SHADOW_MAX_SIZE_OF_THING_NAME*

CONFIG_AWS_IOT_OVERRIDE_THING_SHADOW_RX_BUFFER

Override Shadow RX buffer size

Found in: Component config > CONFIG_AWS_IOT_SDK > Thing Shadow

Allows setting a different Thing Shadow RX buffer size. This is the maximum size of a Thing Shadow message in bytes, plus one.

If not overridden, the default value is the MQTT RX Buffer length plus one. If overriden, do not set higher than the default value.

CONFIG_AWS_IOT_SHADOW_MAX_SIZE_OF_RX_BUFFER

Maximum RX Buffer (bytes)

Found in: Component config > CONFIG_AWS_IOT_SDK > Thing Shadow > CONFIG_AWS_IOT_OVERRIDE_THING_SHADOW_RX_BUFFER

Allows setting a different Thing Shadow RX buffer size. This is the maximum size of a Thing Shadow message in bytes, plus one.

CONFIG_AWS_IOT_SHADOW_MAX_SIZE_OF_UNIQUE_CLIENT_ID_BYTES

Maximum unique client ID size (bytes)

Found in: Component config > CONFIG_AWS_IOT_SDK > Thing Shadow

Maximum size of the Unique Client Id.

CONFIG_AWS_IOT_SHADOW_MAX_SIMULTANEOUS_ACKS

Maximum simultaneous responses

Found in: Component config > CONFIG_AWS_IOT_SDK > Thing Shadow

At any given time we will wait for this many responses. This will correlate to the rate at which the shadow actions are requested

CONFIG_AWS_IOT_SHADOW_MAX_SIMULTANEOUS_THINGNAMES

Maximum simultaneous Thing Name operations

Found in: Component config > CONFIG_AWS_IOT_SDK > Thing Shadow

We could perform shadow action on any thing Name and this is maximum Thing Names we can act on at any given time

CONFIG_AWS_IOT_SHADOW_MAX_JSON_TOKEN_EXPECTED

Maximum expected JSON tokens

Found in: Component config > CONFIG_AWS_IOT_SDK > Thing Shadow

These are the max tokens that is expected to be in the Shadow JSON document. Includes the metadata which is published

CONFIG_AWS_IOT_SHADOW_MAX_SHADOW_TOPIC_LENGTH_WITHOUT_THINGNAME

Maximum topic length (not including Thing Name)

Found in: Component config > CONFIG_AWS_IOT_SDK > Thing Shadow

All shadow actions have to be published or subscribed to a topic which is of the format $aws/things/{thingName}/shadow/update/accepted. This refers to the size of the topic without the Thing Name

CONFIG_AWS_IOT_SHADOW_MAX_SIZE_OF_THING_NAME

Maximum Thing Name length

Found in: Component config > CONFIG_AWS_IOT_SDK > Thing Shadow

Maximum length of a Thing Name.

Bluetooth

Contains:

- *CONFIG_BT_ENABLED*
- *Bluetooth controller*
- *CONFIG_BLUEDROID_ENABLED*
- *CONFIG_NIMBLE_ENABLED*

CONFIG_BT_ENABLED

Bluetooth

Found in: Component config > Bluetooth

Select this option to enable Bluetooth and show the submenu with Bluetooth configuration choices.

Bluetooth controller

Contains:

- *CONFIG_BTDM_CONTROLLER_MODE*
- *CONFIG_BTDM_CONTROLLER_BLE_MAX_CONN*
- *CONFIG_BTDM_CONTROLLER_BR_EDR_MAX_ACL_CONN*
- *CONFIG_BTDM_CONTROLLER_BR_EDR_MAX_SYNC_CONN*
- *CONFIG_BTDM_CTRL_BR_EDR_SCO_DATA_PATH*
- *CONFIG_BTDM_CTRL_AUTO_LATENCY*
- *CONFIG_BTDM_CTRL_LEGACY_AUTH_VENDOR_EVT*
- *CONFIG_BTDM_CONTROLLER_PINNED_TO_CORE_CHOICE*
- *CONFIG_BTDM_CONTROLLER_HCI_MODE_CHOICE*
- *HCI UART(H4) Options*
- *MODEM SLEEP Options*
- *CONFIG_BLE_SCAN_DUPLICATE*
- *CONFIG_BTDM_CONTROLLER_FULL_SCAN_SUPPORTED*
- *CONFIG_BLE_ADV_REPORT_FLOW_CONTROL_SUPPORTED*

CONFIG_BTDM_CONTROLLER_MODE

Bluetooth controller mode (BR/EDR/BLE/DUALMODE)

Found in: Component config > Bluetooth > Bluetooth controller

Specify the bluetooth controller mode (BR/EDR, BLE or dual mode).

Available options:

- BLE Only (BTDM_CONTROLLER_MODE_BLE_ONLY)
- BR/EDR Only (BTDM_CONTROLLER_MODE_BR_EDR_ONLY)
- Bluetooth Dual Mode (BTDM_CONTROLLER_MODE_BTDM)

CONFIG_BTDM_CONTROLLER_BLE_MAX_CONN

BLE Max Connections

Found in: Component config > Bluetooth > Bluetooth controller

BLE maximum connections of bluetooth controller. Each connection uses 1KB static DRAM whenever the BT controller is enabled.

CONFIG_BTDM_CONTROLLER_BR_EDR_MAX_ACL_CONN

BR/EDR ACL Max Connections

Found in: Component config > Bluetooth > Bluetooth controller

BR/EDR ACL maximum connections of bluetooth controller. Each connection uses 1.2KB static DRAM whenever the BT controller is enabled.

CONFIG_BTDM_CONTROLLER_BR_EDR_MAX_SYNC_CONN

BR/EDR Sync(SCO/eSCO) Max Connections

Found in: Component config > Bluetooth > Bluetooth controller

BR/EDR Synchronize maximum connections of bluetooth controller. Each connection uses 2KB static DRAM whenever the BT controller is enabled.

CONFIG_BTDM_CTRL_BR_EDR_SCO_DATA_PATH

BR/EDR Sync(SCO/eSCO) default data path

Found in: Component config > Bluetooth > Bluetooth controller

SCO data path, i.e. HCI or PCM. SCO data can be sent/received through HCI synchronous packets, or the data can be routed to on-chip PCM module on ESP32. PCM input/output signals can be "matrixed" to GPIOs. The default data path can also be set using API "esp_bredr_sco_datapath_set"

Available options:

- HCI (BTDM_CTRL_BR_EDR_SCO_DATA_PATH_HCI)
- PCM (BTDM_CTRL_BR_EDR_SCO_DATA_PATH_PCM)

CONFIG_BTDM_CTRL_AUTO_LATENCY

Auto latency

Found in: Component config > Bluetooth > Bluetooth controller

BLE auto latency, used to enhance classic BT performance while classic BT and BLE are enabled at the same time.

CONFIG_BTDM_CTRL_LEGACY_AUTH_VENDOR_EVT

Legacy Authentication Vendor Specific Event Enable

Found in: Component config > Bluetooth > Bluetooth controller

To protect from BIAS attack during Legacy authentication, Legacy authentication Vendor specific event should be enabled

CONFIG_BTDM_CONTROLLER_PINNED_TO_CORE_CHOICE

The cpu core which bluetooth controller run

Found in: Component config > Bluetooth > Bluetooth controller

Specify the cpu core to run bluetooth controller. Can not specify no-affinity.

Available options:

- Core 0 (PRO CPU) (BTDM_CONTROLLER_PINNED_TO_CORE_0)
- Core 1 (APP CPU) (BTDM_CONTROLLER_PINNED_TO_CORE_1)

CONFIG_BTDM_CONTROLLER_HCI_MODE_CHOICE

HCI mode

Found in: Component config > Bluetooth > Bluetooth controller

Speicify HCI mode as VHCI or UART(H4)

Available options:

- VHCI (BTDM_CONTROLLER_HCI_MODE_VHCI)

  Normal option. Mostly, choose this VHCI when bluetooth host run on ESP32, too.

- UART(H4) (BTDM_CONTROLLER_HCI_MODE_UART_H4)

  If use external bluetooth host which run on other hardware and use UART as the HCI interface, choose this option.

HCI UART(H4) Options

Contains:

- *CONFIG_BT_HCI_UART_NO*
- *CONFIG_BT_HCI_UART_BAUDRATE*

CONFIG_BT_HCI_UART_NO

UART Number for HCI

Found in: Component config > Bluetooth > Bluetooth controller > HCI UART(H4) Options

Uart number for HCI. The available uart is UART1 and UART2.

CONFIG_BT_HCI_UART_BAUDRATE

UART Baudrate for HCI

Found in: Component config > Bluetooth > Bluetooth controller > HCI UART(H4) Options

UART Baudrate for HCI. Please use standard baudrate.

MODEM SLEEP Options

Contains:

- *CONFIG_BTDM_CONTROLLER_MODEM_SLEEP*
- *CONFIG_BTDM_LOW_POWER_CLOCK*

CONFIG_BTDM_CONTROLLER_MODEM_SLEEP

Bluetooth modem sleep

Found in: Component config > Bluetooth > Bluetooth controller > MODEM SLEEP Options

Enable/disable bluetooth controller low power mode.

CONFIG_BTDM_MODEM_SLEEP_MODE

Bluetooth Modem sleep mode

Found in: Component config > Bluetooth > Bluetooth controller > MODEM SLEEP Options > CONFIG_BTDM_CONTROLLER_MODEM_SLEEP

To select which strategy to use for modem sleep

Available options:

- ORIG Mode(sleep with low power clock) (BTDM_MODEM_SLEEP_MODE_ORIG)

  ORIG mode is a bluetooth sleep mode that can be used for dual mode controller. In this mode, bluetooth controller sleeps between BR/EDR frames and BLE events. A low power clock is used to maintain bluetooth reference clock.

- EVED Mode(For internal test only) (BTDM_MODEM_SLEEP_MODE_EVED)

  EVED mode is for BLE only and is only for internal test. Do not use it for production. this mode is not compatible with DFS nor light sleep

CONFIG_BTDM_LOW_POWER_CLOCK

Bluetooth low power clock

Found in: Component config > Bluetooth > Bluetooth controller > MODEM SLEEP Options

Select the low power clock source for bluetooth controller

Available options:

- Main crystal (BTDM_LPCLK_SEL_MAIN_XTAL)

  Main crystal can be used as low power clock for bluetooth modem sleep. If this option is selected, bluetooth modem sleep can work under Dynamic Frequency Scaling(DFS) enabled, but cannot work when light sleep is enabled. Main crystal has a relatively better performance than other bluetooth low power clock sources.

- External 32kHz crystal (BTDM_LPCLK_SEL_EXT_32K_XTAL)

CONFIG_BLE_SCAN_DUPLICATE

BLE Scan Duplicate Options

Found in: Component config > Bluetooth > Bluetooth controller

This select enables parameters setting of BLE scan duplicate.

CONFIG_SCAN_DUPLICATE_TYPE

Scan Duplicate Type

Found in: Component config > Bluetooth > Bluetooth controller > CONFIG_BLE_SCAN_DUPLICATE

Scan duplicate have three ways. one is "Scan Duplicate By Device Address" , This way is to use advertiser address filtering. The adv packet of the same address is only allowed to be reported once. Another way is "Scan Duplicate By Device Address And Advertising Data" . This way is to use advertising data and device address filtering. All different adv packets with the same address are allowed to be reported. The last way is "Scan Duplicate By Advertising Data" . This way is to use advertising data filtering. All same advertising data only allow to be reported once even though they are from different devices.

Available options:

- Scan Duplicate By Device Address (SCAN_DUPLICATE_BY_DEVICE_ADDR)

  This way is to use advertiser address filtering. The adv packet of the same address is only allowed to be reported once

- Scan Duplicate By Advertising Data (SCAN_DUPLICATE_BY_ADV_DATA)

  This way is to use advertising data filtering. All same advertising data only allow to be reported once even though they are from different devices.

- Scan Duplicate By Device Address And Advertising Data (SCAN_DUPLICATE_BY_ADV_DATA_AND_DEVICE_ADDR)

  This way is to use advertising data and device address filtering. All different adv packets with the same address are allowed to be reported.

CONFIG_DUPLICATE_SCAN_CACHE_SIZE

Maximum number of devices in scan duplicate filter

Found in: Component config > Bluetooth > Bluetooth controller > CONFIG_BLE_SCAN_DUPLICATE

Maximum number of devices which can be recorded in scan duplicate filter. When the maximum amount of device in the filter is reached, the cache will be refreshed.

CONFIG_BLE_MESH_SCAN_DUPLICATE_EN

Special duplicate scan mechanism for BLE Mesh scan

Found in: Component config > Bluetooth > Bluetooth controller > CONFIG_BLE_SCAN_DUPLICATE

This enables the BLE scan duplicate for special BLE Mesh scan.

CONFIG_MESH_DUPLICATE_SCAN_CACHE_SIZE

Maximum number of Mesh adv packets in scan duplicate filter

Found in: Component config > Bluetooth > Bluetooth controller > CONFIG_BLE_SCAN_DUPLICATE > CONFIG_BLE_MESH_SCAN_DUPLICATE_EN

Maximum number of adv packets which can be recorded in duplicate scan cache for BLE Mesh. When the maximum amount of device in the filter is reached, the cache will be refreshed.

CONFIG_BTDM_CONTROLLER_FULL_SCAN_SUPPORTED

BLE full scan feature supported

Found in: Component config > Bluetooth > Bluetooth controller

The full scan function is mainly used to provide BLE scan performance. This is required for scenes with high scan performance requirements, such as BLE Mesh scenes.

CONFIG_BLE_ADV_REPORT_FLOW_CONTROL_SUPPORTED

BLE adv report flow control supported

Found in: Component config > Bluetooth > Bluetooth controller

The function is mainly used to enable flow control for advertising reports. When it is enabled, advertising reports will be discarded by the controller if the number of unprocessed advertising reports exceeds the size of BLE adv report flow control.

CONFIG_BLE_ADV_REPORT_FLOW_CONTROL_NUM

BLE adv report flow control number

Found in: Component config > Bluetooth > Bluetooth controller > CONFIG_BLE_ADV_REPORT_FLOW_CONTROL_SUPPORTED

The number of unprocessed advertising report that Bluedroid can save.If you set *BLE_ADV_REPORT_FLOW_CONTROL_NUM* to a small value, this may cause adv packets lost. If you set *BLE_ADV_REPORT_FLOW_CONTROL_NUM* to a large value, Bluedroid may cache a lot of adv packets and this may cause system memory run out. For example, if you set it to 50, the maximum memory consumed by host is 35 * 50 bytes. Please set *BLE_ADV_REPORT_FLOW_CONTROL_NUM* according to your system free memory and handle adv packets as fast as possible, otherwise it will cause adv packets lost.

CONFIG_BLE_ADV_REPORT_DISCARD_THRSHOLD

BLE adv lost event threshold value

Found in: Component config > Bluetooth > Bluetooth controller > CONFIG_BLE_ADV_REPORT_FLOW_CONTROL_SUPPORTED

When adv report flow control is enabled, The ADV lost event will be generated when the number of ADV packets lost in the controller reaches this threshold. It is better to set a larger value. If you set *BLE_ADV_REPORT_DISCARD_THRSHOLD* to a small value or printf every adv lost event, it may cause adv packets lost more.

CONFIG_BLUEDROID_ENABLED

Bluedroid Enable

Found in: Component config > Bluetooth

This enables the default Bluedroid Bluetooth stack

Contains:

- *CONFIG_BLUEDROID_PINNED_TO_CORE_CHOICE*
- *CONFIG_BTC_TASK_STACK_SIZE*
- *CONFIG_BTU_TASK_STACK_SIZE*
- *CONFIG_BLUEDROID_MEM_DEBUG*
- *CONFIG_CLASSIC_BT_ENABLED*
- *CONFIG_GATTS_ENABLE*
- *CONFIG_GATTC_ENABLE*
- *CONFIG_BLE_SMP_ENABLE*
- *CONFIG_BT_STACK_NO_LOG*
- *BT DEBUG LOG LEVEL*
- *CONFIG_BT_ACL_CONNECTIONS*
- *CONFIG_BT_ALLOCATION_FROM_SPIRAM_FIRST*
- *CONFIG_BT_BLE_DYNAMIC_ENV_MEMORY*
- *CONFIG_BLE_HOST_QUEUE_CONGESTION_CHECK*
- *CONFIG_BLE_ACTIVE_SCAN_REPORT_ADV_SCAN_RSP_INDIVIDUALLY*
- *CONFIG_BLE_ESTABLISH_LINK_CONNECTION_TIMEOUT*

CONFIG_BLUEDROID_PINNED_TO_CORE_CHOICE

The cpu core which Bluedroid run

Found in: Component config > Bluetooth > CONFIG_BLUEDROID_ENABLED

Which the cpu core to run Bluedroid. Can choose core0 and core1. Can not specify no-affinity.

Available options:

- Core 0 (PRO CPU) (BLUEDROID_PINNED_TO_CORE_0)
- Core 1 (APP CPU) (BLUEDROID_PINNED_TO_CORE_1)

CONFIG_BTC_TASK_STACK_SIZE

Bluetooth event (callback to application) task stack size

Found in: Component config > Bluetooth > CONFIG_BLUEDROID_ENABLED

This select btc task stack size

CONFIG_BTU_TASK_STACK_SIZE

Bluetooth Bluedroid Host Stack task stack size

Found in: Component config > Bluetooth > CONFIG_BLUEDROID_ENABLED

This select btu task stack size

CONFIG_BLUEDROID_MEM_DEBUG

Bluedroid memory debug

Found in: Component config > Bluetooth > CONFIG_BLUEDROID_ENABLED

Bluedroid memory debug

CONFIG_CLASSIC_BT_ENABLED

Classic Bluetooth

Found in: Component config > Bluetooth > CONFIG_BLUEDROID_ENABLED

For now this option needs "SMP_ENABLE" to be set to yes

CONFIG_A2DP_ENABLE

A2DP

Found in: Component config > Bluetooth > CONFIG_BLUEDROID_ENABLED > CONFIG_CLASSIC_BT_ENABLED

Advanced Audio Distrubution Profile

CONFIG_A2DP_SINK_TASK_STACK_SIZE

A2DP sink (audio stream decoding) task stack size

Found in: Component config > Bluetooth > CONFIG_BLUEDROID_ENABLED > CONFIG_CLASSIC_BT_ENABLED > CONFIG_A2DP_ENABLE

CONFIG_A2DP_SOURCE_TASK_STACK_SIZE

A2DP source (audio stream encoding) task stack size

Found in: Component config > Bluetooth > CONFIG_BLUEDROID_ENABLED > CONFIG_CLASSIC_BT_ENABLED > CONFIG_A2DP_ENABLE

CONFIG_BT_SPP_ENABLED

SPP

Found in: Component config > Bluetooth > CONFIG_BLUEDROID_ENABLED > CONFIG_CLASSIC_BT_ENABLED

This enables the Serial Port Profile

CONFIG_HFP_ENABLE

Hands Free/Handset Profile

Found in: Component config > Bluetooth > CONFIG_BLUEDROID_ENABLED > CONFIG_CLASSIC_BT_ENABLED

CONFIG_HFP_ROLE

Hands-free Profile Role configuration

Found in: Component config > Bluetooth > CONFIG_BLUEDROID_ENABLED > CONFIG_CLASSIC_BT_ENABLED > CONFIG_HFP_ENABLE

Available options:

- Hands Free Unit (HFP_CLIENT_ENABLE)

CONFIG_HFP_AUDIO_DATA_PATH

audio(SCO) data path

Found in: Component config > Bluetooth > CONFIG_BLUEDROID_ENABLED > CONFIG_CLASSIC_BT_ENABLED > CONFIG_HFP_ENABLE

SCO data path, i.e. HCI or PCM. This option is set using API "esp_bredr_sco_datapath_set" in Bluetooth host. Default SCO data path can also be set in Bluetooth Controller.

Available options:

- PCM (HFP_AUDIO_DATA_PATH_PCM)

- HCI (HFP_AUDIO_DATA_PATH_HCI)

CONFIG_BT_SSP_ENABLED

Secure Simple Pairing

Found in: Component config > Bluetooth > CONFIG_BLUEDROID_ENABLED > CONFIG_CLASSIC_BT_ENABLED

This enables the Secure Simple Pairing. If disable this option, Bluedroid will only support Legacy Pairing

CONFIG_GATTS_ENABLE

Include GATT server module(GATTS)

Found in: Component config > Bluetooth > CONFIG_BLUEDROID_ENABLED

This option can be disabled when the app work only on gatt client mode

CONFIG_GATTS_BLUFI_ENABLE

Include blufi function

Found in: Component config > Bluetooth > CONFIG_BLUEDROID_ENABLED > CONFIG_GATTS_ENABLE

This option can be close when the app does not require blufi function.

CONFIG_GATTS_SEND_SERVICE_CHANGE_MODE

GATTS Service Change Mode

Found in: Component config > Bluetooth > CONFIG_BLUEDROID_ENABLED > CONFIG_GATTS_ENABLE

Service change indication mode for GATT Server.

Available options:

- GATTS manually send service change indication (GATTS_SEND_SERVICE_CHANGE_MANUAL)

  Manually send service change indication through API esp_ble_gatts_send_service_change_indication()

- GATTS automatically send service change indication (GATTS_SEND_SERVICE_CHANGE_AUTO)

  Let Bluedroid handle the service change indication internally

CONFIG_GATTC_ENABLE

Include GATT client module(GATTC)

Found in: Component config > Bluetooth > CONFIG_BLUEDROID_ENABLED

This option can be close when the app work only on gatt server mode

CONFIG_GATTC_CACHE_NVS_FLASH

Save gattc cache data to nvs flash

Found in: Component config > Bluetooth > CONFIG_BLUEDROID_ENABLED > CONFIG_GATTC_ENABLE

This select can save gattc cache data to nvs flash

CONFIG_BLE_SMP_ENABLE

Include BLE security module(SMP)

Found in: Component config > Bluetooth > CONFIG_BLUEDROID_ENABLED

This option can be close when the app not used the ble security connect.

CONFIG_SMP_SLAVE_CON_PARAMS_UPD_ENABLE

Slave enable connection parameters update during pairing

Found in: Component config > Bluetooth > CONFIG_BLUEDROID_ENABLED > CONFIG_BLE_SMP_ENABLE

In order to reduce the pairing time, slave actively initiates connection parameters update during pairing.

CONFIG_BT_STACK_NO_LOG

Disable BT debug logs (minimize bin size)

Found in: Component config > Bluetooth > CONFIG_BLUEDROID_ENABLED

This select can save the rodata code size

BT DEBUG LOG LEVEL

Contains:

- *CONFIG_HCI_INITIAL_TRACE_LEVEL*
- *CONFIG_BTM_INITIAL_TRACE_LEVEL*
- *CONFIG_L2CAP_INITIAL_TRACE_LEVEL*
- *CONFIG_RFCOMM_INITIAL_TRACE_LEVEL*
- *CONFIG_SDP_INITIAL_TRACE_LEVEL*
- *CONFIG_GAP_INITIAL_TRACE_LEVEL*
- *CONFIG_BNEP_INITIAL_TRACE_LEVEL*
- *CONFIG_PAN_INITIAL_TRACE_LEVEL*
- *CONFIG_A2D_INITIAL_TRACE_LEVEL*
- *CONFIG_AVDT_INITIAL_TRACE_LEVEL*
- *CONFIG_AVCT_INITIAL_TRACE_LEVEL*
- *CONFIG_AVRC_INITIAL_TRACE_LEVEL*
- *CONFIG_MCA_INITIAL_TRACE_LEVEL*
- *CONFIG_HID_INITIAL_TRACE_LEVEL*
- *CONFIG_APPL_INITIAL_TRACE_LEVEL*
- *CONFIG_GATT_INITIAL_TRACE_LEVEL*
- *CONFIG_SMP_INITIAL_TRACE_LEVEL*
- *CONFIG_BTIF_INITIAL_TRACE_LEVEL*
- *CONFIG_BTC_INITIAL_TRACE_LEVEL*
- *CONFIG_OSI_INITIAL_TRACE_LEVEL*
- *CONFIG_BLUFI_INITIAL_TRACE_LEVEL*

CONFIG_HCI_INITIAL_TRACE_LEVEL

HCI layer

Found in: Component config > Bluetooth > CONFIG_BLUEDROID_ENABLED > BT DEBUG LOG LEVEL

Define BT trace level for HCI layer

Available options:

- NONE (HCI_TRACE_LEVEL_NONE)
- ERROR (HCI_TRACE_LEVEL_ERROR)
- WARNING (HCI_TRACE_LEVEL_WARNING)
- API (HCI_TRACE_LEVEL_API)
- EVENT (HCI_TRACE_LEVEL_EVENT)
- DEBUG (HCI_TRACE_LEVEL_DEBUG)
- VERBOSE (HCI_TRACE_LEVEL_VERBOSE)

CONFIG_BTM_INITIAL_TRACE_LEVEL

BTM layer

Found in: Component config > Bluetooth > CONFIG_BLUEDROID_ENABLED > BT DEBUG LOG LEVEL

Define BT trace level for BTM layer

Available options:

- NONE (BTM_TRACE_LEVEL_NONE)
- ERROR (BTM_TRACE_LEVEL_ERROR)
- WARNING (BTM_TRACE_LEVEL_WARNING)
- API (BTM_TRACE_LEVEL_API)
- EVENT (BTM_TRACE_LEVEL_EVENT)
- DEBUG (BTM_TRACE_LEVEL_DEBUG)
- VERBOSE (BTM_TRACE_LEVEL_VERBOSE)

CONFIG_L2CAP_INITIAL_TRACE_LEVEL

L2CAP layer

Found in: Component config > Bluetooth > CONFIG_BLUEDROID_ENABLED > BT DEBUG LOG LEVEL

Define BT trace level for L2CAP layer

Available options:

- NONE (L2CAP_TRACE_LEVEL_NONE)
- ERROR (L2CAP_TRACE_LEVEL_ERROR)
- WARNING (L2CAP_TRACE_LEVEL_WARNING)

- API (L2CAP_TRACE_LEVEL_API)
- EVENT (L2CAP_TRACE_LEVEL_EVENT)
- DEBUG (L2CAP_TRACE_LEVEL_DEBUG)
- VERBOSE (L2CAP_TRACE_LEVEL_VERBOSE)

CONFIG_RFCOMM_INITIAL_TRACE_LEVEL

RFCOMM layer

Found in: Component config > Bluetooth > CONFIG_BLUEDROID_ENABLED > BT DEBUG LOG LEVEL

Define BT trace level for RFCOMM layer

Available options:

- NONE (RFCOMM_TRACE_LEVEL_NONE)
- ERROR (RFCOMM_TRACE_LEVEL_ERROR)
- WARNING (RFCOMM_TRACE_LEVEL_WARNING)
- API (RFCOMM_TRACE_LEVEL_API)
- EVENT (RFCOMM_TRACE_LEVEL_EVENT)
- DEBUG (RFCOMM_TRACE_LEVEL_DEBUG)
- VERBOSE (RFCOMM_TRACE_LEVEL_VERBOSE)

CONFIG_SDP_INITIAL_TRACE_LEVEL

SDP layer

Found in: Component config > Bluetooth > CONFIG_BLUEDROID_ENABLED > BT DEBUG LOG LEVEL

Define BT trace level for SDP layer

Available options:

- NONE (SDP_TRACE_LEVEL_NONE)
- ERROR (SDP_TRACE_LEVEL_ERROR)
- WARNING (SDP_TRACE_LEVEL_WARNING)
- API (SDP_TRACE_LEVEL_API)
- EVENT (SDP_TRACE_LEVEL_EVENT)
- DEBUG (SDP_TRACE_LEVEL_DEBUG)

- VERBOSE (SDP_TRACE_LEVEL_VERBOSE)

CONFIG_GAP_INITIAL_TRACE_LEVEL

GAP layer

Found in: Component config > Bluetooth > CONFIG_BLUEDROID_ENABLED > BT DEBUG LOG LEVEL

Define BT trace level for GAP layer

Available options:

- NONE (GAP_TRACE_LEVEL_NONE)
- ERROR (GAP_TRACE_LEVEL_ERROR)
- WARNING (GAP_TRACE_LEVEL_WARNING)
- API (GAP_TRACE_LEVEL_API)
- EVENT (GAP_TRACE_LEVEL_EVENT)
- DEBUG (GAP_TRACE_LEVEL_DEBUG)
- VERBOSE (GAP_TRACE_LEVEL_VERBOSE)

CONFIG_BNEP_INITIAL_TRACE_LEVEL

BNEP layer

Found in: Component config > Bluetooth > CONFIG_BLUEDROID_ENABLED > BT DEBUG LOG LEVEL

Define BT trace level for BNEP layer

Available options:

- NONE (BNEP_TRACE_LEVEL_NONE)
- ERROR (BNEP_TRACE_LEVEL_ERROR)
- WARNING (BNEP_TRACE_LEVEL_WARNING)
- API (BNEP_TRACE_LEVEL_API)
- EVENT (BNEP_TRACE_LEVEL_EVENT)
- DEBUG (BNEP_TRACE_LEVEL_DEBUG)
- VERBOSE (BNEP_TRACE_LEVEL_VERBOSE)

CONFIG_PAN_INITIAL_TRACE_LEVEL

PAN layer

Found in: Component config > Bluetooth > CONFIG_BLUEDROID_ENABLED > BT DEBUG LOG LEVEL

Define BT trace level for PAN layer

Available options:

- NONE (PAN_TRACE_LEVEL_NONE)
- ERROR (PAN_TRACE_LEVEL_ERROR)
- WARNING (PAN_TRACE_LEVEL_WARNING)
- API (PAN_TRACE_LEVEL_API)
- EVENT (PAN_TRACE_LEVEL_EVENT)
- DEBUG (PAN_TRACE_LEVEL_DEBUG)
- VERBOSE (PAN_TRACE_LEVEL_VERBOSE)

CONFIG_A2D_INITIAL_TRACE_LEVEL

A2D layer

Found in: Component config > Bluetooth > CONFIG_BLUEDROID_ENABLED > BT DEBUG LOG LEVEL

Define BT trace level for A2D layer

Available options:

- NONE (A2D_TRACE_LEVEL_NONE)
- ERROR (A2D_TRACE_LEVEL_ERROR)
- WARNING (A2D_TRACE_LEVEL_WARNING)
- API (A2D_TRACE_LEVEL_API)
- EVENT (A2D_TRACE_LEVEL_EVENT)
- DEBUG (A2D_TRACE_LEVEL_DEBUG)
- VERBOSE (A2D_TRACE_LEVEL_VERBOSE)

CONFIG_AVDT_INITIAL_TRACE_LEVEL

AVDT layer

Found in: Component config > Bluetooth > CONFIG_BLUEDROID_ENABLED > BT DEBUG LOG LEVEL

Define BT trace level for AVDT layer

Available options:

- NONE (AVDT_TRACE_LEVEL_NONE)
- ERROR (AVDT_TRACE_LEVEL_ERROR)
- WARNING (AVDT_TRACE_LEVEL_WARNING)
- API (AVDT_TRACE_LEVEL_API)
- EVENT (AVDT_TRACE_LEVEL_EVENT)
- DEBUG (AVDT_TRACE_LEVEL_DEBUG)
- VERBOSE (AVDT_TRACE_LEVEL_VERBOSE)

CONFIG_AVCT_INITIAL_TRACE_LEVEL

AVCT layer

Found in: Component config > Bluetooth > CONFIG_BLUEDROID_ENABLED > BT DEBUG LOG LEVEL

Define BT trace level for AVCT layer

Available options:

- NONE (AVCT_TRACE_LEVEL_NONE)
- ERROR (AVCT_TRACE_LEVEL_ERROR)
- WARNING (AVCT_TRACE_LEVEL_WARNING)
- API (AVCT_TRACE_LEVEL_API)
- EVENT (AVCT_TRACE_LEVEL_EVENT)
- DEBUG (AVCT_TRACE_LEVEL_DEBUG)
- VERBOSE (AVCT_TRACE_LEVEL_VERBOSE)

CONFIG_AVRC_INITIAL_TRACE_LEVEL

AVRC layer

Found in: Component config > Bluetooth > CONFIG_BLUEDROID_ENABLED > BT DEBUG LOG LEVEL

Define BT trace level for AVRC layer

Available options:

- NONE (AVRC_TRACE_LEVEL_NONE)
- ERROR (AVRC_TRACE_LEVEL_ERROR)
- WARNING (AVRC_TRACE_LEVEL_WARNING)
- API (AVRC_TRACE_LEVEL_API)
- EVENT (AVRC_TRACE_LEVEL_EVENT)
- DEBUG (AVRC_TRACE_LEVEL_DEBUG)
- VERBOSE (AVRC_TRACE_LEVEL_VERBOSE)

CONFIG_MCA_INITIAL_TRACE_LEVEL

MCA layer

Found in: Component config > Bluetooth > CONFIG_BLUEDROID_ENABLED > BT DEBUG LOG LEVEL

Define BT trace level for MCA layer

Available options:

- NONE (MCA_TRACE_LEVEL_NONE)
- ERROR (MCA_TRACE_LEVEL_ERROR)
- WARNING (MCA_TRACE_LEVEL_WARNING)
- API (MCA_TRACE_LEVEL_API)
- EVENT (MCA_TRACE_LEVEL_EVENT)
- DEBUG (MCA_TRACE_LEVEL_DEBUG)
- VERBOSE (MCA_TRACE_LEVEL_VERBOSE)

CONFIG_HID_INITIAL_TRACE_LEVEL

HID layer

Found in: Component config > Bluetooth > CONFIG_BLUEDROID_ENABLED > BT DEBUG LOG LEVEL

Define BT trace level for HID layer

Available options:

- NONE (HID_TRACE_LEVEL_NONE)
- ERROR (HID_TRACE_LEVEL_ERROR)

- WARNING (HID_TRACE_LEVEL_WARNING)
- API (HID_TRACE_LEVEL_API)
- EVENT (HID_TRACE_LEVEL_EVENT)
- DEBUG (HID_TRACE_LEVEL_DEBUG)
- VERBOSE (HID_TRACE_LEVEL_VERBOSE)

CONFIG_APPL_INITIAL_TRACE_LEVEL

APPL layer

Found in: Component config > Bluetooth > CONFIG_BLUEDROID_ENABLED > BT DEBUG LOG LEVEL

Define BT trace level for APPL layer

Available options:

- NONE (APPL_TRACE_LEVEL_NONE)
- ERROR (APPL_TRACE_LEVEL_ERROR)
- WARNING (APPL_TRACE_LEVEL_WARNING)
- API (APPL_TRACE_LEVEL_API)
- EVENT (APPL_TRACE_LEVEL_EVENT)
- DEBUG (APPL_TRACE_LEVEL_DEBUG)
- VERBOSE (APPL_TRACE_LEVEL_VERBOSE)

CONFIG_GATT_INITIAL_TRACE_LEVEL

GATT layer

Found in: Component config > Bluetooth > CONFIG_BLUEDROID_ENABLED > BT DEBUG LOG LEVEL

Define BT trace level for GATT layer

Available options:

- NONE (GATT_TRACE_LEVEL_NONE)
- ERROR (GATT_TRACE_LEVEL_ERROR)
- WARNING (GATT_TRACE_LEVEL_WARNING)
- API (GATT_TRACE_LEVEL_API)
- EVENT (GATT_TRACE_LEVEL_EVENT)

- DEBUG (GATT_TRACE_LEVEL_DEBUG)
- VERBOSE (GATT_TRACE_LEVEL_VERBOSE)

CONFIG_SMP_INITIAL_TRACE_LEVEL

SMP layer

Found in: Component config > Bluetooth > CONFIG_BLUEDROID_ENABLED > BT DEBUG LOG LEVEL

Define BT trace level for SMP layer

Available options:

- NONE (SMP_TRACE_LEVEL_NONE)
- ERROR (SMP_TRACE_LEVEL_ERROR)
- WARNING (SMP_TRACE_LEVEL_WARNING)
- API (SMP_TRACE_LEVEL_API)
- EVENT (SMP_TRACE_LEVEL_EVENT)
- DEBUG (SMP_TRACE_LEVEL_DEBUG)
- VERBOSE (SMP_TRACE_LEVEL_VERBOSE)

CONFIG_BTIF_INITIAL_TRACE_LEVEL

BTIF layer

Found in: Component config > Bluetooth > CONFIG_BLUEDROID_ENABLED > BT DEBUG LOG LEVEL

Define BT trace level for BTIF layer

Available options:

- NONE (BTIF_TRACE_LEVEL_NONE)
- ERROR (BTIF_TRACE_LEVEL_ERROR)
- WARNING (BTIF_TRACE_LEVEL_WARNING)
- API (BTIF_TRACE_LEVEL_API)
- EVENT (BTIF_TRACE_LEVEL_EVENT)
- DEBUG (BTIF_TRACE_LEVEL_DEBUG)
- VERBOSE (BTIF_TRACE_LEVEL_VERBOSE)

CONFIG_BTC_INITIAL_TRACE_LEVEL

BTC layer

Found in: Component config > Bluetooth > CONFIG_BLUEDROID_ENABLED > BT DEBUG LOG LEVEL

Define BT trace level for BTC layer

Available options:

- NONE (BTC_TRACE_LEVEL_NONE)
- ERROR (BTC_TRACE_LEVEL_ERROR)
- WARNING (BTC_TRACE_LEVEL_WARNING)
- API (BTC_TRACE_LEVEL_API)
- EVENT (BTC_TRACE_LEVEL_EVENT)
- DEBUG (BTC_TRACE_LEVEL_DEBUG)
- VERBOSE (BTC_TRACE_LEVEL_VERBOSE)

CONFIG_OSI_INITIAL_TRACE_LEVEL

OSI layer

Found in: Component config > Bluetooth > CONFIG_BLUEDROID_ENABLED > BT DEBUG LOG LEVEL

Define BT trace level for OSI layer

Available options:

- NONE (OSI_TRACE_LEVEL_NONE)
- ERROR (OSI_TRACE_LEVEL_ERROR)
- WARNING (OSI_TRACE_LEVEL_WARNING)
- API (OSI_TRACE_LEVEL_API)
- EVENT (OSI_TRACE_LEVEL_EVENT)
- DEBUG (OSI_TRACE_LEVEL_DEBUG)
- VERBOSE (OSI_TRACE_LEVEL_VERBOSE)

CONFIG_BLUFI_INITIAL_TRACE_LEVEL

BLUFI layer

Found in: Component config > Bluetooth > CONFIG_BLUEDROID_ENABLED > BT DEBUG LOG LEVEL

Define BT trace level for BLUFI layer

Available options:

- NONE (BLUFI_TRACE_LEVEL_NONE)
- ERROR (BLUFI_TRACE_LEVEL_ERROR)
- WARNING (BLUFI_TRACE_LEVEL_WARNING)
- API (BLUFI_TRACE_LEVEL_API)
- EVENT (BLUFI_TRACE_LEVEL_EVENT)
- DEBUG (BLUFI_TRACE_LEVEL_DEBUG)
- VERBOSE (BLUFI_TRACE_LEVEL_VERBOSE)

CONFIG_BT_ACL_CONNECTIONS

BT/BLE MAX ACL CONNECTIONS(1~7)

Found in: Component config > Bluetooth > CONFIG_BLUEDROID_ENABLED

Maximum BT/BLE connection count

CONFIG_BT_ALLOCATION_FROM_SPIRAM_FIRST

BT/BLE will first malloc the memory from the PSRAM

Found in: Component config > Bluetooth > CONFIG_BLUEDROID_ENABLED

This select can save the internal RAM if there have the PSRAM

CONFIG_BT_BLE_DYNAMIC_ENV_MEMORY

Use dynamic memory allocation in BT/BLE stack

Found in: Component config > Bluetooth > CONFIG_BLUEDROID_ENABLED

This select can make the allocation of memory will become more flexible

CONFIG_BLE_HOST_QUEUE_CONGESTION_CHECK

BLE queue congestion check

Found in: Component config > Bluetooth > CONFIG_BLUEDROID_ENABLED

When scanning and scan duplicate is not enabled, if there are a lot of adv packets around or application layer handling adv packets is slow, it will cause the controller memory to run out. if enabled, adv packets will be lost when host queue is congested.

CONFIG_BLE_ACTIVE_SCAN_REPORT_ADV_SCAN_RSP_INDIVIDUALLY

Report adv data and scan response individually when BLE active scan

Found in: Component config > Bluetooth > CONFIG_BLUEDROID_ENABLED

Originally, when doing BLE active scan, Bluedroid will not report adv to application layer until receive scan response. This option is used to disable the behavior. When enable this option, Bluedroid will report adv data or scan response to application layer immediately.

Memory reserved at start of DRAM for Bluetooth stack

CONFIG_BLE_ESTABLISH_LINK_CONNECTION_TIMEOUT

Timeout of BLE connection establishment

Found in: Component config > Bluetooth > CONFIG_BLUEDROID_ENABLED

Bluetooth Connection establishment maximum time, if connection time exceeds this value, the connection establishment fails, ESP_GATTC_OPEN_EVT or ESP_GATTS_OPEN_EVT is triggered.

CONFIG_NIMBLE_ENABLED

Enable NimBLE host stack

Found in: Component config > Bluetooth

This enables NimBLE host stack

Contains:

- *CONFIG_NIMBLE_MEM_ALLOC_MODE*
- *CONFIG_NIMBLE_MAX_CONNECTIONS*
- *CONFIG_NIMBLE_MAX_BONDS*
- *CONFIG_NIMBLE_MAX_CCCDS*
- *CONFIG_NIMBLE_L2CAP_COC_MAX_NUM*
- *CONFIG_NIMBLE_PINNED_TO_CORE_CHOICE*
- *CONFIG_NIMBLE_TASK_STACK_SIZE*
- *CONFIG_NIMBLE_ROLE_CENTRAL*

- *CONFIG_NIMBLE_ROLE_PERIPHERAL*
- *CONFIG_NIMBLE_ROLE_BROADCASTER*
- *CONFIG_NIMBLE_ROLE_OBSERVER*
- *CONFIG_NIMBLE_NVS_PERSIST*
- *CONFIG_NIMBLE_SM_LEGACY*
- *CONFIG_NIMBLE_SM_SC*
- *CONFIG_NIMBLE_DEBUG*
- *CONFIG_NIMBLE_SM_SC_DEBUG_KEYS*
- *CONFIG_NIMBLE_SVC_GAP_DEVICE_NAME*
- *CONFIG_NIMBLE_GAP_DEVICE_NAME_MAX_LEN*
- *CONFIG_NIMBLE_ATT_PREFERRED_MTU*
- *CONFIG_NIMBLE_SVC_GAP_APPEARANCE*
- *CONFIG_NIMBLE_ACL_BUF_COUNT*
- *CONFIG_NIMBLE_ACL_BUF_SIZE*
- *CONFIG_NIMBLE_HCI_EVT_BUF_SIZE*
- *CONFIG_NIMBLE_HCI_EVT_HI_BUF_COUNT*
- *CONFIG_NIMBLE_HCI_EVT_LO_BUF_COUNT*
- *CONFIG_NIMBLE_MSYS1_BLOCK_COUNT*
- *CONFIG_NIMBLE_HS_FLOW_CTRL*
- *CONFIG_NIMBLE_RPA_TIMEOUT*
- *CONFIG_NIMBLE_MESH*
- *CONFIG_NIMBLE_CRYPTO_STACK_MBEDTLS*

CONFIG_NIMBLE_MEM_ALLOC_MODE

Memory allocation strategy

Found in: Component config > Bluetooth > CONFIG_NIMBLE_ENABLED

Allocation strategy for NimBLE host stack, essentially provides ability to allocate all required dynamic allocations from,

- Internal DRAM memory only
- External SPIRAM memory only

- Either internal or external memory based on default malloc() behavior in ESP-IDF

Recommended mode here is always internal, since that is most preferred from security perspective. But if application requirement does not allow sufficient free internal memory then alternate mode can be selected.

Available options:

- Internal memory (NIMBLE_MEM_ALLOC_MODE_INTERNAL)
- External SPIRAM (NIMBLE_MEM_ALLOC_MODE_EXTERNAL)
- Default alloc mode (NIMBLE_MEM_ALLOC_MODE_DEFAULT)

CONFIG_NIMBLE_MAX_CONNECTIONS

Maximum number of concurrent connections

Found in: Component config > Bluetooth > CONFIG_NIMBLE_ENABLED

Defines maximum number of concurrent BLE connections

CONFIG_NIMBLE_MAX_BONDS

Maximum number of bonds to save across reboots

Found in: Component config > Bluetooth > CONFIG_NIMBLE_ENABLED

Defines maximum number of bonds to save for peer security and our security

CONFIG_NIMBLE_MAX_CCCDS

Maximum number of CCC descriptors to save across reboots

Found in: Component config > Bluetooth > CONFIG_NIMBLE_ENABLED

Defines maximum number of CCC descriptors to save

CONFIG_NIMBLE_L2CAP_COC_MAX_NUM

Maximum number of connection oriented channels

Found in: Component config > Bluetooth > CONFIG_NIMBLE_ENABLED

Defines maximum number of BLE Connection Oriented Channels. When set to (0), BLE COC is not compiled in

CONFIG_NIMBLE_PINNED_TO_CORE_CHOICE

The CPU core on which NimBLE host will run

Found in: Component config > Bluetooth > CONFIG_NIMBLE_ENABLED

The CPU core on which NimBLE host will run. You can choose Core 0 or Core 1. Cannot specify no-affinity

Available options:

- Core 0 (PRO CPU) (NIMBLE_PINNED_TO_CORE_0)
- Core 1 (APP CPU) (NIMBLE_PINNED_TO_CORE_1)

CONFIG_NIMBLE_TASK_STACK_SIZE

NimBLE Host task stack size

Found in: Component config > Bluetooth > CONFIG_NIMBLE_ENABLED

This configures stack size of NimBLE host task

CONFIG_NIMBLE_ROLE_CENTRAL

Enable BLE Central role

Found in: Component config > Bluetooth > CONFIG_NIMBLE_ENABLED

CONFIG_NIMBLE_ROLE_PERIPHERAL

Enable BLE Peripheral role

Found in: Component config > Bluetooth > CONFIG_NIMBLE_ENABLED

CONFIG_NIMBLE_ROLE_BROADCASTER

Enable BLE Broadcaster role

Found in: Component config > Bluetooth > CONFIG_NIMBLE_ENABLED

CONFIG_NIMBLE_ROLE_OBSERVER

Enable BLE Observer role

Found in: Component config > Bluetooth > CONFIG_NIMBLE_ENABLED

CONFIG_NIMBLE_NVS_PERSIST

Persist the BLE Bonding keys in NVS

Found in: Component config > Bluetooth > CONFIG_NIMBLE_ENABLED

Enable this flag to make bonding persistent across device reboots

CONFIG_NIMBLE_SM_LEGACY

Security manager legacy pairing

Found in: Component config > Bluetooth > CONFIG_NIMBLE_ENABLED

Enable security manager legacy pairing

CONFIG_NIMBLE_SM_SC

Security manager secure connections (4.2)

Found in: Component config > Bluetooth > CONFIG_NIMBLE_ENABLED

Enable security manager secure connections

CONFIG_NIMBLE_DEBUG

Enable extra runtime asserts and host debugging

Found in: Component config > Bluetooth > CONFIG_NIMBLE_ENABLED

This enables extra runtime asserts and host debugging

CONFIG_NIMBLE_SM_SC_DEBUG_KEYS

Use predefined public-private key pair

Found in: Component config > Bluetooth > CONFIG_NIMBLE_ENABLED

If this option is enabled, SM uses predefined DH key pair as described in Core Specification, Vol. 3, Part H, 2.3.5.6.1. This allows to decrypt air traffic easily and thus should only be used for debugging.

CONFIG_NIMBLE_SVC_GAP_DEVICE_NAME

BLE GAP default device name

Found in: Component config > Bluetooth > CONFIG_NIMBLE_ENABLED

The Device Name characteristic shall contain the name of the device as an UTF-8 string. This name can be changed by using API ble_svc_gap_device_name_set()

CONFIG_NIMBLE_GAP_DEVICE_NAME_MAX_LEN

Maximum length of BLE device name in octets

Found in: *Component config* > *Bluetooth* > *CONFIG_NIMBLE_ENABLED*

Device Name characteristic value shall be 0 to 248 octets in length

CONFIG_NIMBLE_ATT_PREFERRED_MTU

Preferred MTU size in octets

Found in: *Component config* > *Bluetooth* > *CONFIG_NIMBLE_ENABLED*

This is the default value of ATT MTU indicated by the device during an ATT MTU exchange. This value can be changed using API ble_att_set_preferred_mtu()

CONFIG_NIMBLE_SVC_GAP_APPEARANCE

External appearance of the device

Found in: *Component config* > *Bluetooth* > *CONFIG_NIMBLE_ENABLED*

Standard BLE GAP Appearance value in HEX format e.g. 0x02C0

CONFIG_NIMBLE_ACL_BUF_COUNT

ACL Buffer count

Found in: *Component config* > *Bluetooth* > *CONFIG_NIMBLE_ENABLED*

The number of ACL data buffers.

CONFIG_NIMBLE_ACL_BUF_SIZE

ACL Buffer size

Found in: *Component config* > *Bluetooth* > *CONFIG_NIMBLE_ENABLED*

This is the maximum size of the data portion of HCI ACL data packets. It does not include the HCI data header (of 4 bytes)

CONFIG_NIMBLE_HCI_EVT_BUF_SIZE

HCI Event Buffer size

Found in: Component config > Bluetooth > CONFIG_NIMBLE_ENABLED

This is the size of each HCI event buffer in bytes

CONFIG_NIMBLE_HCI_EVT_HI_BUF_COUNT

High Priority HCI Event Buffer count

Found in: Component config > Bluetooth > CONFIG_NIMBLE_ENABLED

This is the high priority HCI events' buffer size. High-priority event buffers are for everything except advertising reports. If there are no free high-priority event buffers then host will try to allocate a low-priority buffer instead

CONFIG_NIMBLE_HCI_EVT_LO_BUF_COUNT

Low Priority HCI Event Buffer count

Found in: Component config > Bluetooth > CONFIG_NIMBLE_ENABLED

This is the low priority HCI events' buffer size. Low-priority event buffers are only used for advertising reports. If there are no free low-priority event buffers, then an incoming advertising report will get dropped

CONFIG_NIMBLE_MSYS1_BLOCK_COUNT

MSYS_1 Block Count

Found in: Component config > Bluetooth > CONFIG_NIMBLE_ENABLED

MSYS is a system level mbuf registry. For prepare write & prepare responses MBUFs are allocated out of msys_1 pool. For NIMBLE_MESH enabled cases, this block count is increased by 8 than user defined count.

CONFIG_NIMBLE_HS_FLOW_CTRL

Enable Host Flow control

Found in: Component config > Bluetooth > CONFIG_NIMBLE_ENABLED

Enable Host Flow control

CONFIG_NIMBLE_HS_FLOW_CTRL_ITVL

Host Flow control interval

Found in: Component config > Bluetooth > CONFIG_NIMBLE_ENABLED > CONFIG_NIMBLE_HS_FLOW_CTRL

Host flow control interval in msecs

CONFIG_NIMBLE_HS_FLOW_CTRL_THRESH

Host Flow control threshold

Found in: Component config > Bluetooth > CONFIG_NIMBLE_ENABLED > CONFIG_NIMBLE_HS_FLOW_CTRL

Host flow control threshold, if the number of free buffers are at or below this threshold, send an immediate number-of-completed-packets event

CONFIG_NIMBLE_HS_FLOW_CTRL_TX_ON_DISCONNECT

Host Flow control on disconnect

Found in: Component config > Bluetooth > CONFIG_NIMBLE_ENABLED > CONFIG_NIMBLE_HS_FLOW_CTRL

Enable this option to send number-of-completed-packets event to controller after disconnection

CONFIG_NIMBLE_RPA_TIMEOUT

RPA timeout in seconds

Found in: Component config > Bluetooth > CONFIG_NIMBLE_ENABLED

Time interval between RPA address change. This is applicable in case of Host based RPA

CONFIG_NIMBLE_MESH

Enable BLE mesh functionality

Found in: Component config > Bluetooth > CONFIG_NIMBLE_ENABLED

Enable BLE Mesh functionality

Contains:

- *CONFIG_NIMBLE_MESH_PROXY*

- *CONFIG_NIMBLE_MESH_PROV*
- *CONFIG_NIMBLE_MESH_GATT_PROXY*
- *CONFIG_NIMBLE_MESH_RELAY*
- *CONFIG_NIMBLE_MESH_LOW_POWER*
- *CONFIG_NIMBLE_MESH_FRIEND*
- *CONFIG_NIMBLE_MESH_DEVICE_NAME*

CONFIG_NIMBLE_MESH_PROXY

Enable mesh proxy functionality

Found in: Component config > Bluetooth > CONFIG_NIMBLE_ENABLED > CONFIG_NIMBLE_MESH

Enable proxy. This is automatically set whenever NIMBLE_MESH_PB_GATT or NIMBLE_MESH_GATT_PROXY is set

CONFIG_NIMBLE_MESH_PROV

Enable BLE mesh provisioning

Found in: Component config > Bluetooth > CONFIG_NIMBLE_ENABLED > CONFIG_NIMBLE_MESH

Enable mesh provisioning

CONFIG_NIMBLE_MESH_PB_ADV

Enable mesh provisioning over advertising bearer

Found in: Component config > Bluetooth > CONFIG_NIMBLE_ENABLED > CONFIG_NIMBLE_MESH > CONFIG_NIMBLE_MESH_PROV

Enable this option to allow the device to be provisioned over the advertising bearer

CONFIG_NIMBLE_MESH_PB_GATT

Enable mesh provisioning over GATT bearer

Found in: Component config > Bluetooth > CONFIG_NIMBLE_ENABLED > CONFIG_NIMBLE_MESH > CONFIG_NIMBLE_MESH_PROV

Enable this option to allow the device to be provisioned over the GATT bearer

CONFIG_NIMBLE_MESH_GATT_PROXY

Enable GATT Proxy functionality

Found in: *Component config* > *Bluetooth* > *CONFIG_NIMBLE_ENABLED* > *CONFIG_NIMBLE_MESH*

This option enables support for the Mesh GATT Proxy Service, i.e. the ability to act as a proxy between a Mesh GATT Client and a Mesh network

CONFIG_NIMBLE_MESH_RELAY

Enable mesh relay functionality

Found in: *Component config* > *Bluetooth* > *CONFIG_NIMBLE_ENABLED* > *CONFIG_NIMBLE_MESH*

Support for acting as a Mesh Relay Node

CONFIG_NIMBLE_MESH_LOW_POWER

Enable mesh low power mode

Found in: *Component config* > *Bluetooth* > *CONFIG_NIMBLE_ENABLED* > *CONFIG_NIMBLE_MESH*

Enable this option to be able to act as a Low Power Node

CONFIG_NIMBLE_MESH_FRIEND

Enable mesh friend functionality

Found in: *Component config* > *Bluetooth* > *CONFIG_NIMBLE_ENABLED* > *CONFIG_NIMBLE_MESH*

Enable this option to be able to act as a Friend Node

CONFIG_NIMBLE_MESH_DEVICE_NAME

Set mesh device name

Found in: *Component config* > *Bluetooth* > *CONFIG_NIMBLE_ENABLED* > *CONFIG_NIMBLE_MESH*

This value defines Bluetooth Mesh device/node name

CONFIG_NIMBLE_CRYPTO_STACK_MBEDTLS

Override TinyCrypt with mbedTLS for crypto computations

Found in: Component config > Bluetooth > CONFIG_NIMBLE_ENABLED

Enable this option to choose mbedTLS instead of TinyCrypt for crypto computations.

CONFIG_BLE_MESH

ESP BLE Mesh Support

Found in: Component config

This option enables ESP BLE Mesh support. The specific features that are available may depend on other features that have been enabled in the stack, such as Bluetooth Support, Bluedroid Support & GATT support.

Contains:

- *CONFIG_BLE_MESH_HCI_5_0*
- *CONFIG_BLE_MESH_USE_DUPLICATE_SCAN*
- *CONFIG_BLE_MESH_MEM_ALLOC_MODE*
- *CONFIG_BLE_MESH_FREERTOS_STATIC_ALLOC*
- *CONFIG_BLE_MESH_DEINIT*
- *CONFIG_BLE_MESH_FAST_PROV*
- *CONFIG_BLE_MESH_NODE*
- *CONFIG_BLE_MESH_PROVISIONER*
- *CONFIG_BLE_MESH_PROV*
- *CONFIG_BLE_MESH_PB_ADV*
- *CONFIG_BLE_MESH_PB_GATT*
- *CONFIG_BLE_MESH_PROXY*
- *CONFIG_BLE_MESH_GATT_PROXY_SERVER*
- *CONFIG_BLE_MESH_GATT_PROXY_CLIENT*
- *CONFIG_BLE_MESH_SETTINGS*
- *CONFIG_BLE_MESH_SUBNET_COUNT*
- *CONFIG_BLE_MESH_APP_KEY_COUNT*
- *CONFIG_BLE_MESH_MODEL_KEY_COUNT*

- *CONFIG_BLE_MESH_MODEL_GROUP_COUNT*
- *CONFIG_BLE_MESH_LABEL_COUNT*
- *CONFIG_BLE_MESH_CRPL*
- *CONFIG_BLE_MESH_MSG_CACHE_SIZE*
- *CONFIG_BLE_MESH_ADV_BUF_COUNT*
- *CONFIG_BLE_MESH_SUPPORT_BLE_ADV*
- *CONFIG_BLE_MESH_IVU_DIVIDER*
- *CONFIG_BLE_MESH_TX_SEG_MSG_COUNT*
- *CONFIG_BLE_MESH_RX_SEG_MSG_COUNT*
- *CONFIG_BLE_MESH_RX_SDU_MAX*
- *CONFIG_BLE_MESH_TX_SEG_MAX*
- *CONFIG_BLE_MESH_RELAY*
- *CONFIG_BLE_MESH_LOW_POWER*
- *CONFIG_BLE_MESH_FRIEND*
- *CONFIG_BLE_MESH_NO_LOG*
- *BLE Mesh STACK DEBUG LOG LEVEL*
- *BLE Mesh NET BUF DEBUG LOG LEVEL*
- *CONFIG_BLE_MESH_CLIENT_MSG_TIMEOUT*
- *Support for BLE Mesh Foundation models*
- *Support for BLE Mesh Client/Server models*
- *CONFIG_BLE_MESH_IV_UPDATE_TEST*
- *BLE Mesh specific test option*

CONFIG_BLE_MESH_HCI_5_0

Support sending 20ms non-connectable adv packets

Found in: Component config > CONFIG_BLE_MESH

It is a temporary solution and needs further modifications.

CONFIG_BLE_MESH_USE_DUPLICATE_SCAN

Support Duplicate Scan in BLE Mesh

Found in: Component config > CONFIG_BLE_MESH

Enable this option to allow using specific duplicate scan filter in BLE Mesh, and Scan Duplicate Type must be set by choosing the option in the Bluetooth Controller section in menuconfig, which is "Scan Duplicate By Device Address and Advertising Data".

CONFIG_BLE_MESH_MEM_ALLOC_MODE

Memory allocation strategy

Found in: Component config > CONFIG_BLE_MESH

Allocation strategy for BLE Mesh stack, essentially provides ability to allocate all required dynamic allocations from,

- Internal DRAM memory only
- External SPIRAM memory only
- Either internal or external memory based on default malloc() behavior in ESP-IDF

Recommended mode here is always internal, since that is most preferred from security perspective. But if application requirement does not allow sufficient free internal memory then alternate mode can be selected.

Available options:

- Internal DRAM (BLE_MESH_MEM_ALLOC_MODE_INTERNAL)
- External SPIRAM (BLE_MESH_ALLOC_FROM_PSRAM_FIRST)
- Default alloc mode (BLE_MESH_MEM_ALLOC_MODE_DEFAULT)

  Enable this option to use the default memory allocation strategy when external SPIRAM is enabled. See the SPIRAM options for more details.

CONFIG_BLE_MESH_FREERTOS_STATIC_ALLOC

Enable FreeRTOS static allocation

Found in: Component config > CONFIG_BLE_MESH

Enable this option to use FreeRTOS static allocation APIs for BLE Mesh, which provides the ability to use different dynamic memory (i.e. SPIRAM) for FreeRTOS objects. If this option is disabled, the FreeRTOS static allocation APIs will not be used, and internal DRAM will be allocated for FreeRTOS objects.

CONFIG_BLE_MESH_FREERTOS_STATIC_ALLOC_MODE

Memory allocation for FreeRTOS objects

Found in: Component config > CONFIG_BLE_MESH > CONFIG_BLE_MESH_FREERTOS_STATIC_ALLOC

Choose the memory to be used for FreeRTOS objects.

Available options:

- External SPIRAM (BLE_MESH_FREERTOS_STATIC_ALLOC_EXTERNAL)

  If enabled, BLE Mesh allocates dynamic memory from external SPIRAM for FreeRTOS objects, i.e. mutex, queue, and task stack. External SPIRAM can only be used for task stack when SPIRAM_ALLOW_STACK_EXTERNAL_MEMORY is enabled. See the SPIRAM options for more details.

CONFIG_BLE_MESH_DEINIT

Support de-initialize BLE Mesh stack

Found in: Component config > CONFIG_BLE_MESH

If enabled, users can use the function esp_ble_mesh_deinit() to de-initialize the whole BLE Mesh stack.

CONFIG_BLE_MESH_FAST_PROV

Enable BLE Mesh Fast Provisioning

Found in: Component config > CONFIG_BLE_MESH

Enable this option to allow BLE Mesh fast provisioning solution to be used. When there are multiple unprovisioned devices around, fast provisioning can greatly reduce the time consumption of the whole provisioning process. When this option is enabled, and after an unprovisioned device is provisioned into a node successfully, it can be changed to a temporary Provisioner.

CONFIG_BLE_MESH_NODE

Support for BLE Mesh Node

Found in: Component config > CONFIG_BLE_MESH

Enable the device to be provisioned into a node. This option should be enabled when an unprovisioned device is going to be provisioned into a node and communicate with other nodes in the BLE Mesh network.

CONFIG_BLE_MESH_PROVISIONER

Support for BLE Mesh Provisioner

Found in: Component config > CONFIG_BLE_MESH

Enable the device to be a Provisioner. The option should be enabled when a device is going to act as a Provisioner and provision unprovisioned devices into the BLE Mesh network.

CONFIG_BLE_MESH_WAIT_FOR_PROV_MAX_DEV_NUM

Maximum number of unprovisioned devices that can be added to device queue

Found in: Component config > CONFIG_BLE_MESH > CONFIG_BLE_MESH_PROVISIONER

This option specifies how many unprovisioned devices can be added to device queue for provisioning. Users can use this option to define the size of the queue in the bottom layer which is used to store unprovisioned device information (e.g. Device UUID, address).

CONFIG_BLE_MESH_MAX_PROV_NODES

Maximum number of devices that can be provisioned by Provisioner

Found in: Component config > CONFIG_BLE_MESH > CONFIG_BLE_MESH_PROVISIONER

This option specifies how many devices can be provisioned by a Provisioner. This value indicates the maximum number of unprovisioned devices which can be provisioned by a Provisioner. For instance, if the value is 6 then it means the Provisioner can provision up to 6 unprovisioned devices. Theoretically a Provisioner without the limitation of its memory can provision up to 32766 unprovisioned devices, here we limit the maximum number to 100 just to limit the memory used by a Provisioner. The bigger the value is, the more memory it will cost by a Provisioner to store the information of nodes.

CONFIG_BLE_MESH_PBA_SAME_TIME

Maximum number of PB-ADV running at the same time by Provisioner

Found in: Component config > CONFIG_BLE_MESH > CONFIG_BLE_MESH_PROVISIONER

This option specifies how many devices can be provisioned at the same time using PB-ADV. For examples, if the value is 2, it means a Provisioner can provision two unprovisioned devices with PB-ADV at the same time.

CONFIG_BLE_MESH_PBG_SAME_TIME

Maximum number of PB-GATT running at the same time by Provisioner

Found in: Component config > CONFIG_BLE_MESH > CONFIG_BLE_MESH_PROVISIONER

This option specifies how many devices can be provisioned at the same time using PB-GATT. For example, if the value is 2, it means a Provisioner can provision two unprovisioned devices with PB-GATT at the same time.

CONFIG_BLE_MESH_PROVISIONER_SUBNET_COUNT

Maximum number of mesh subnets that can be created by Provisioner

Found in: Component config > CONFIG_BLE_MESH > CONFIG_BLE_MESH_PROVISIONER

This option specifies how many subnets per network a Provisioner can create. Indeed, this value decides the number of network keys which can be added by a Provisioner.

CONFIG_BLE_MESH_PROVISIONER_APP_KEY_COUNT

Maximum number of application keys that can be owned by Provisioner

Found in: Component config > CONFIG_BLE_MESH > CONFIG_BLE_MESH_PROVISIONER

This option specifies how many application keys the Provisioner can have. Indeed, this value decides the number of the application keys which can be added by a Provisioner.

CONFIG_BLE_MESH_PROVISIONER_RECV_HB

Support receiving Heartbeat messages

Found in: Component config > CONFIG_BLE_MESH > CONFIG_BLE_MESH_PROVISIONER

When this option is enabled, Provisioner can call specific functions to enable or disable receiving Heartbeat messages and notify them to the application layer.

CONFIG_BLE_MESH_PROVISIONER_RECV_HB_FILTER_SIZE

Maximum number of filter entries for receiving Heartbeat messages

Found in: Component config > CONFIG_BLE_MESH > CONFIG_BLE_MESH_PROVISIONER > CONFIG_BLE_MESH_PROVISIONER_RECV_HB

This option specifies how many heartbeat filter entries Provisioner supports. The heartbeat filter (acceptlist or rejectlist) entries are used to store a list of SRC and DST which can be used to decide if a heartbeat message will be processed and notified to the application layer by Provisioner. Note: The filter is an empty rejectlist by default.

CONFIG_BLE_MESH_PROV

BLE Mesh Provisioning support

Found in: Component config > CONFIG_BLE_MESH

Enable this option to support BLE Mesh Provisioning functionality. For BLE Mesh, this option should be always enabled.

CONFIG_BLE_MESH_PB_ADV

Provisioning support using the advertising bearer (PB-ADV)

Found in: Component config > CONFIG_BLE_MESH

Enable this option to allow the device to be provisioned over the advertising bearer. This option should be enabled if PB-ADV is going to be used during provisioning procedure.

CONFIG_BLE_MESH_PB_GATT

Provisioning support using GATT (PB-GATT)

Found in: Component config > CONFIG_BLE_MESH

Enable this option to allow the device to be provisioned over GATT. This option should be enabled if PB-GATT is going to be used during provisioning procedure.

Virtual option enabled whenever any Proxy protocol is needed

CONFIG_BLE_MESH_PROXY

BLE Mesh Proxy protocol support

Found in: Component config > CONFIG_BLE_MESH

Enable this option to support BLE Mesh Proxy protocol used by PB-GATT and other proxy pdu transmission.

CONFIG_BLE_MESH_GATT_PROXY_SERVER

BLE Mesh GATT Proxy Server

Found in: Component config > CONFIG_BLE_MESH

This option enables support for Mesh GATT Proxy Service, i.e. the ability to act as a proxy between a Mesh GATT Client and a Mesh network. This option should be enabled if a node is going to be a Proxy Server.

CONFIG_BLE_MESH_NODE_ID_TIMEOUT

Node Identity advertising timeout

Found in: Component config > CONFIG_BLE_MESH > CONFIG_BLE_MESH_GATT_PROXY_SERVER

This option determines for how long the local node advertises using Node Identity. The given value is in seconds. The specification limits this to 60 seconds and lists it as the recommended value as well. So leaving the default value is the safest option. When an unprovisioned device is provisioned successfully and becomes a node, it will start to advertise using Node Identity during the time set by this option. And after that, Network ID will be advertised.

CONFIG_BLE_MESH_PROXY_FILTER_SIZE

Maximum number of filter entries per Proxy Client

Found in: Component config > CONFIG_BLE_MESH > CONFIG_BLE_MESH_GATT_PROXY_SERVER

This option specifies how many Proxy Filter entries the local node supports. The entries of Proxy filter (whitelist or blacklist) are used to store a list of addresses which can be used to decide which messages will be forwarded to the Proxy Client by the Proxy Server.

CONFIG_BLE_MESH_GATT_PROXY_CLIENT

BLE Mesh GATT Proxy Client

Found in: Component config > CONFIG_BLE_MESH

This option enables support for Mesh GATT Proxy Client. The Proxy Client can use the GATT bearer to send mesh messages to a node that supports the advertising bearer.

CONFIG_BLE_MESH_SETTINGS

Store BLE Mesh configuration persistently

Found in: Component config > CONFIG_BLE_MESH

When selected, the BLE Mesh stack will take care of storing/restoring the BLE Mesh configuration persistently in flash. If the device is a BLE Mesh node, when this option is enabled, the configuration of the device will be stored persistently, including unicast address, NetKey, AppKey, etc. And if the device is a BLE Mesh Provisioner, the information of the device will be stored persistently, including the information of provisioned nodes, NetKey, AppKey, etc.

CONFIG_BLE_MESH_STORE_TIMEOUT

Delay (in seconds) before storing anything persistently

Found in: Component config > CONFIG_BLE_MESH > CONFIG_BLE_MESH_SETTINGS

This value defines in seconds how soon any pending changes are actually written into persistent storage (flash) after a change occurs. The option allows nodes to delay a certain period of time to save proper information to flash. The default value is 0, which means information will be stored immediately once there are updates.

CONFIG_BLE_MESH_SEQ_STORE_RATE

How often the sequence number gets updated in storage

Found in: Component config > CONFIG_BLE_MESH > CONFIG_BLE_MESH_SETTINGS

This value defines how often the local sequence number gets updated in persistent storage (i.e. flash). e.g. a value of 100 means that the sequence number will be stored to flash on every 100th increment. If the node sends messages very frequently a higher value makes more sense, whereas if the node sends infrequently a value as low as 0 (update storage for every increment) can make sense. When the stack gets initialized it will add sequence number to the last stored one, so that it starts off with a value that' s guaranteed to be larger than the last one used before power off.

CONFIG_BLE_MESH_RPL_STORE_TIMEOUT

Minimum frequency that the RPL gets updated in storage

Found in: Component config > CONFIG_BLE_MESH > CONFIG_BLE_MESH_SETTINGS

This value defines in seconds how soon the RPL (Replay Protection List) gets written to persistent storage after a change occurs. If the node receives messages frequently, then a large value is recommended. If the node receives messages rarely, then the value can be as low as 0 (which means the RPL is written into the storage immediately). Note that if the node operates in

a security-sensitive case, and there is a risk of sudden power-off, then a value of 0 is strongly recommended. Otherwise, a power loss before RPL being written into the storage may introduce message replay attacks and system security will be in a vulnerable state.

CONFIG_BLE_MESH_SETTINGS_BACKWARD_COMPATIBILITY

A specific option for settings backward compatibility

Found in: Component config > CONFIG_BLE_MESH > CONFIG_BLE_MESH_SETTINGS

This option is created to solve the issue of failure in recovering node information after mesh stack updates. In the old version mesh stack, there is no key of "mesh/role" in nvs. In the new version mesh stack, key of "mesh/role" is added in nvs, recovering node information needs to check "mesh/role" key in nvs and implements selective recovery of mesh node information. Therefore, there may be failure in recovering node information during node restarting after OTA.

The new version mesh stack adds the option of "mesh/role" because we have added the support of storing Provisioner information, while the old version only supports storing node information.

If users are updating their nodes from old version to new version, we recommend enabling this option, so that system could set the flag in advance before recovering node information and make sure the node information recovering could work as expected.

CONFIG_BLE_MESH_SPECIFIC_PARTITION

Use a specific NVS partition for BLE Mesh

Found in: Component config > CONFIG_BLE_MESH > CONFIG_BLE_MESH_SETTINGS

When selected, the mesh stack will use a specified NVS partition instead of default NVS partition. Note that the specified partition must be registered with NVS using nvs_flash_init_partition() API, and the partition must exists in the csv file. When Provisioner needs to store a large amount of nodes' information in the flash (e.g. more than 20), this option is recommended to be enabled.

CONFIG_BLE_MESH_PARTITION_NAME

Name of the NVS partition for BLE Mesh

Found in: Component config > CONFIG_BLE_MESH > CONFIG_BLE_MESH_SETTINGS > CONFIG_BLE_MESH_SPECIFIC_PARTITION

This value defines the name of the specified NVS partition used by the mesh stack.

CONFIG_BLE_MESH_USE_MULTIPLE_NAMESPACE

Support using multiple NVS namespaces by Provisioner

Found in: Component config > CONFIG_BLE_MESH > CONFIG_BLE_MESH_SETTINGS

When selected, Provisioner can use different NVS namespaces to store different instances of mesh information. For example, if in the first room, Provisioner uses NetKey A, AppKey A and provisions three devices, these information will be treated as mesh information instance A. When the Provisioner moves to the second room, it uses NetKey B, AppKey B and provisions two devices, then the information will be treated as mesh information instance B. Here instance A and instance B will be stored in different namespaces. With this option enabled, Provisioner needs to use specific functions to open the corresponding NVS namespace, restore the mesh information, release the mesh information or erase the mesh information.

CONFIG_BLE_MESH_MAX_NVS_NAMESPACE

Maximum number of NVS namespaces

Found in: Component config > CONFIG_BLE_MESH > CONFIG_BLE_MESH_SETTINGS > CONFIG_BLE_MESH_USE_MULTIPLE_NAMESPACE

This option specifies the maximum NVS namespaces supported by Provisioner.

CONFIG_BLE_MESH_SUBNET_COUNT

Maximum number of mesh subnets per network

Found in: Component config > CONFIG_BLE_MESH

This option specifies how many subnets a Mesh network can have at the same time. Indeed, this value decides the number of the network keys which can be owned by a node.

CONFIG_BLE_MESH_APP_KEY_COUNT

Maximum number of application keys per network

Found in: Component config > CONFIG_BLE_MESH

This option specifies how many application keys the device can store per network. Indeed, this value decides the number of the application keys which can be owned by a node.

CONFIG_BLE_MESH_MODEL_KEY_COUNT

Maximum number of application keys per model

Found in: Component config > CONFIG_BLE_MESH

This option specifies the maximum number of application keys to which each model can be bound.

CONFIG_BLE_MESH_MODEL_GROUP_COUNT

Maximum number of group address subscriptions per model

Found in: Component config > CONFIG_BLE_MESH

This option specifies the maximum number of addresses to which each model can be subscribed.

CONFIG_BLE_MESH_LABEL_COUNT

Maximum number of Label UUIDs used for Virtual Addresses

Found in: Component config > CONFIG_BLE_MESH

This option specifies how many Label UUIDs can be stored. Indeed, this value decides the number of the Virtual Addresses can be supported by a node.

CONFIG_BLE_MESH_CRPL

Maximum capacity of the replay protection list

Found in: Component config > CONFIG_BLE_MESH

This option specifies the maximum capacity of the replay protection list. It is similar to Network message cache size, but has a different purpose. The replay protection list is used to prevent a node from replay attack, which will store the source address and sequence number of the received mesh messages. For Provisioner, the replay protection list size should not be smaller than the maximum number of nodes whose information can be stored. And the element number of each node should also be taken into consideration. For example, if Provisioner can provision up to 20 nodes and each node contains two elements, then the replay protection list size of Provisioner should be at least 40.

CONFIG_BLE_MESH_MSG_CACHE_SIZE

Network message cache size

Found in: Component config > CONFIG_BLE_MESH

Number of messages that are cached for the network. This helps prevent unnecessary decryption operations and unnecessary relays. This option is similar to Replay protection list, but has a different purpose. A node is not required to cache the entire Network PDU and may cache only part of it for tracking, such as values for SRC/SEQ or others.

CONFIG_BLE_MESH_ADV_BUF_COUNT

Number of advertising buffers

Found in: Component config > CONFIG_BLE_MESH

Number of advertising buffers available. The transport layer reserves ADV_BUF_COUNT - 3 buffers for outgoing segments. The maximum outgoing SDU size is 12 times this value (out of which 4 or 8 bytes are used for the Transport Layer MIC). For example, 5 segments means the maximum SDU size is 60 bytes, which leaves 56 bytes for application layer data using a 4-byte MIC, or 52 bytes using an 8-byte MIC.

CONFIG_BLE_MESH_SUPPORT_BLE_ADV

Support sending normal BLE advertising packets

Found in: Component config > CONFIG_BLE_MESH

When selected, users can send normal BLE advertising packets with specific API.

CONFIG_BLE_MESH_BLE_ADV_BUF_COUNT

Number of advertising buffers for BLE advertising packets

Found in: Component config > CONFIG_BLE_MESH > CONFIG_BLE_MESH_SUPPORT_BLE_ADV

Number of advertising buffers for BLE packets available.

CONFIG_BLE_MESH_IVU_DIVIDER

Divider for IV Update state refresh timer

Found in: Component config > CONFIG_BLE_MESH

When the IV Update state enters Normal operation or IV Update in Progress, we need to keep track of how many hours has passed in the state, since the specification requires us to remain in the state at least for 96 hours (Update in Progress has an additional upper limit of 144 hours).

In order to fulfill the above requirement, even if the node might be powered off once in a while, we need to store persistently how many hours the node has been in the state. This doesn' t necessarily need to happen every hour (thanks to the flexible duration range). The exact cadence will depend a lot on the ways that the node will be used and what kind of power source it has.

Since there is no single optimal answer, this configuration option allows specifying a divider, i.e. how many intervals the 96 hour minimum gets split into. After each interval the duration that

the node has been in the current state gets stored to flash. E.g. the default value of 4 means that the state is saved every 24 hours (96 / 4).

CONFIG_BLE_MESH_TX_SEG_MSG_COUNT

Maximum number of simultaneous outgoing segmented messages

Found in: *Component config* > *CONFIG_BLE_MESH*

Maximum number of simultaneous outgoing multi-segment and/or reliable messages. The default value is 1, which means the device can only send one segmented message at a time. And if another segmented message is going to be sent, it should wait for the completion of the previous one. If users are going to send multiple segmented messages at the same time, this value should be configured properly.

CONFIG_BLE_MESH_RX_SEG_MSG_COUNT

Maximum number of simultaneous incoming segmented messages

Found in: *Component config* > *CONFIG_BLE_MESH*

Maximum number of simultaneous incoming multi-segment and/or reliable messages. The default value is 1, which means the device can only receive one segmented message at a time. And if another segmented message is going to be received, it should wait for the completion of the previous one. If users are going to receive multiple segmented messages at the same time, this value should be configured properly.

CONFIG_BLE_MESH_RX_SDU_MAX

Maximum incoming Upper Transport Access PDU length

Found in: *Component config* > *CONFIG_BLE_MESH*

Maximum incoming Upper Transport Access PDU length. Leave this to the default value, unless you really need to optimize memory usage.

CONFIG_BLE_MESH_TX_SEG_MAX

Maximum number of segments in outgoing messages

Found in: *Component config* > *CONFIG_BLE_MESH*

Maximum number of segments supported for outgoing messages. This value should typically be fine-tuned based on what models the local node supports, i.e. what' s the largest message payload that the node needs to be able to send. This value affects memory and call stack consumption,

which is why the default is lower than the maximum that the specification would allow (32 segments).

The maximum outgoing SDU size is 12 times this number (out of which 4 or 8 bytes is used for the Transport Layer MIC). For example, 5 segments means the maximum SDU size is 60 bytes, which leaves 56 bytes for application layer data using a 4-byte MIC and 52 bytes using an 8-byte MIC.

Be sure to specify a sufficient number of advertising buffers when setting this option to a higher value. There must be at least three more advertising buffers (BLE_MESH_ADV_BUF_COUNT) as there are outgoing segments.

CONFIG_BLE_MESH_RELAY

Relay support

Found in: Component config > CONFIG_BLE_MESH

Support for acting as a Mesh Relay Node. Enabling this option will allow a node to support the Relay feature, and the Relay feature can still be enabled or disabled by proper configuration messages. Disabling this option will let a node not support the Relay feature.

CONFIG_BLE_MESH_RELAY_ADV_BUF

Use separate advertising buffers for relay packets

Found in: Component config > CONFIG_BLE_MESH > CONFIG_BLE_MESH_RELAY

When selected, self-send packets will be put in a high-priority queue and relay packets will be put in a low-priority queue.

CONFIG_BLE_MESH_RELAY_ADV_BUF_COUNT

Number of advertising buffers for relay packets

Found in: Component config > CONFIG_BLE_MESH > CONFIG_BLE_MESH_RELAY > CONFIG_BLE_MESH_RELAY_ADV_BUF

Number of advertising buffers for relay packets available.

CONFIG_BLE_MESH_LOW_POWER

Support for Low Power features

Found in: Component config > CONFIG_BLE_MESH

Enable this option to operate as a Low Power Node. If low power consumption is required by a node, this option should be enabled. And once the node enters the mesh network, it will try to find a Friend node and establish a friendship.

CONFIG_BLE_MESH_LPN_ESTABLISHMENT

Perform Friendship establishment using low power

Found in: Component config > CONFIG_BLE_MESH > CONFIG_BLE_MESH_LOW_POWER

Perform the Friendship establishment using low power with the help of a reduced scan duty cycle. The downside of this is that the node may miss out on messages intended for it until it has successfully set up Friendship with a Friend node. When this option is enabled, the node will stop scanning for a period of time after a Friend Request or Friend Poll is sent, so as to reduce more power consumption.

CONFIG_BLE_MESH_LPN_AUTO

Automatically start looking for Friend nodes once provisioned

Found in: Component config > CONFIG_BLE_MESH > CONFIG_BLE_MESH_LOW_POWER

Once provisioned, automatically enable LPN functionality and start looking for Friend nodes. If this option is disabled LPN mode needs to be manually enabled by calling bt_mesh_lpn_set(true). When an unprovisioned device is provisioned successfully and becomes a node, enabling this option will trigger the node starts to send Friend Request at a certain period until it finds a proper Friend node.

CONFIG_BLE_MESH_LPN_AUTO_TIMEOUT

Time from last received message before going to LPN mode

Found in: Component config > CONFIG_BLE_MESH > CONFIG_BLE_MESH_LOW_POWER > CONFIG_BLE_MESH_LPN_AUTO

Time in seconds from the last received message, that the node waits out before starting to look for Friend nodes.

CONFIG_BLE_MESH_LPN_RETRY_TIMEOUT

Retry timeout for Friend requests

Found in: Component config > CONFIG_BLE_MESH > CONFIG_BLE_MESH_LOW_POWER

Time in seconds between Friend Requests, if a previous Friend Request did not yield any acceptable Friend Offers.

CONFIG_BLE_MESH_LPN_RSSI_FACTOR

RSSIFactor, used in Friend Offer Delay calculation

Found in: Component config > CONFIG_BLE_MESH > CONFIG_BLE_MESH_LOW_POWER

The contribution of the RSSI, measured by the Friend node, used in Friend Offer Delay calculations. 0 = 1, 1 = 1.5, 2 = 2, 3 = 2.5. RSSIFactor, one of the parameters carried by Friend Request sent by Low Power node, which is used to calculate the Friend Offer Delay.

CONFIG_BLE_MESH_LPN_RECV_WIN_FACTOR

ReceiveWindowFactor, used in Friend Offer Delay calculation

Found in: Component config > CONFIG_BLE_MESH > CONFIG_BLE_MESH_LOW_POWER

The contribution of the supported Receive Window used in Friend Offer Delay calculations. 0 = 1, 1 = 1.5, 2 = 2, 3 = 2.5. ReceiveWindowFactor, one of the parameters carried by Friend Request sent by Low Power node, which is used to calculate the Friend Offer Delay.

CONFIG_BLE_MESH_LPN_MIN_QUEUE_SIZE

Minimum size of the acceptable friend queue (MinQueueSizeLog)

Found in: Component config > CONFIG_BLE_MESH > CONFIG_BLE_MESH_LOW_POWER

The MinQueueSizeLog field is defined as log_2(N), where N is the minimum number of maximum size Lower Transport PDUs that the Friend node can store in its Friend Queue. As an example, MinQueueSizeLog value 1 gives N = 2, and value 7 gives N = 128.

CONFIG_BLE_MESH_LPN_RECV_DELAY

Receive delay requested by the local node

Found in: Component config > CONFIG_BLE_MESH > CONFIG_BLE_MESH_LOW_POWER

The ReceiveDelay is the time between the Low Power node sending a request and listening for a response. This delay allows the Friend node time to prepare the response. The value is in units of milliseconds.

CONFIG_BLE_MESH_LPN_POLL_TIMEOUT

The value of the PollTimeout timer

Found in: Component config > CONFIG_BLE_MESH > CONFIG_BLE_MESH_LOW_POWER

PollTimeout timer is used to measure time between two consecutive requests sent by a Low Power node. If no requests are received the Friend node before the PollTimeout timer expires, then the friendship is considered terminated. The value is in units of 100 milliseconds, so e.g. a value of 300 means 30 seconds. The smaller the value, the faster the Low Power node tries to get messages from corresponding Friend node and vice versa.

CONFIG_BLE_MESH_LPN_INIT_POLL_TIMEOUT

The starting value of the PollTimeout timer

Found in: Component config > CONFIG_BLE_MESH > CONFIG_BLE_MESH_LOW_POWER

The initial value of the PollTimeout timer when Friendship is to be established for the first time. After this, the timeout gradually grows toward the actual PollTimeout, doubling in value for each iteration. The value is in units of 100 milliseconds, so e.g. a value of 300 means 30 seconds.

CONFIG_BLE_MESH_LPN_SCAN_LATENCY

Latency for enabling scanning

Found in: Component config > CONFIG_BLE_MESH > CONFIG_BLE_MESH_LOW_POWER

Latency (in milliseconds) is the time it takes to enable scanning. In practice, it means how much time in advance of the Receive Window, the request to enable scanning is made.

CONFIG_BLE_MESH_LPN_GROUPS

Number of groups the LPN can subscribe to

Found in: Component config > CONFIG_BLE_MESH > CONFIG_BLE_MESH_LOW_POWER

Maximum number of groups to which the LPN can subscribe.

CONFIG_BLE_MESH_FRIEND

Support for Friend feature

Found in: *Component config* > *CONFIG_BLE_MESH*

Enable this option to be able to act as a Friend Node.

CONFIG_BLE_MESH_FRIEND_RECV_WIN

Friend Receive Window

Found in: *Component config* > *CONFIG_BLE_MESH* > *CONFIG_BLE_MESH_FRIEND*

Receive Window in milliseconds supported by the Friend node.

CONFIG_BLE_MESH_FRIEND_QUEUE_SIZE

Minimum number of buffers supported per Friend Queue

Found in: *Component config* > *CONFIG_BLE_MESH* > *CONFIG_BLE_MESH_FRIEND*

Minimum number of buffers available to be stored for each local Friend Queue. This option decides the size of each buffer which can be used by a Friend node to store messages for each Low Power node.

CONFIG_BLE_MESH_FRIEND_SUB_LIST_SIZE

Friend Subscription List Size

Found in: *Component config* > *CONFIG_BLE_MESH* > *CONFIG_BLE_MESH_FRIEND*

Size of the Subscription List that can be supported by a Friend node for a Low Power node. And Low Power node can send Friend Subscription List Add or Friend Subscription List Remove messages to the Friend node to add or remove subscription addresses.

CONFIG_BLE_MESH_FRIEND_LPN_COUNT

Number of supported LPN nodes

Found in: *Component config* > *CONFIG_BLE_MESH* > *CONFIG_BLE_MESH_FRIEND*

Number of Low Power Nodes with which a Friend can have Friendship simultaneously. A Friend node can have friendship with multiple Low Power nodes at the same time, while a Low Power node can only establish friendship with only one Friend node at the same time.

CONFIG_BLE_MESH_FRIEND_SEG_RX

Number of incomplete segment lists per LPN

Found in: Component config > CONFIG_BLE_MESH > CONFIG_BLE_MESH_FRIEND

Number of incomplete segment lists tracked for each Friends' LPN. In other words, this determines from how many elements can segmented messages destined for the Friend queue be received simultaneously.

CONFIG_BLE_MESH_NO_LOG

Disable BLE Mesh debug logs (minimize bin size)

Found in: Component config > CONFIG_BLE_MESH

Select this to save the BLE Mesh related rodata code size. Enabling this option will disable the output of BLE Mesh debug log.

BLE Mesh STACK DEBUG LOG LEVEL

Contains:

- *CONFIG_BLE_MESH_STACK_TRACE_LEVEL*

CONFIG_BLE_MESH_STACK_TRACE_LEVEL

BLE_MESH_STACK

Found in: Component config > CONFIG_BLE_MESH > BLE Mesh STACK DEBUG LOG LEVEL

Define BLE Mesh trace level for BLE Mesh stack.

Available options:

- NONE (BLE_MESH_TRACE_LEVEL_NONE)
- ERROR (BLE_MESH_TRACE_LEVEL_ERROR)
- WARNING (BLE_MESH_TRACE_LEVEL_WARNING)
- INFO (BLE_MESH_TRACE_LEVEL_INFO)

- DEBUG (BLE_MESH_TRACE_LEVEL_DEBUG)
- VERBOSE (BLE_MESH_TRACE_LEVEL_VERBOSE)

BLE Mesh NET BUF DEBUG LOG LEVEL

Contains:

- *CONFIG_BLE_MESH_NET_BUF_TRACE_LEVEL*

CONFIG_BLE_MESH_NET_BUF_TRACE_LEVEL

BLE_MESH_NET_BUF

Found in: Component config > CONFIG_BLE_MESH > BLE Mesh NET BUF DEBUG LOG LEVEL

Define BLE Mesh trace level for BLE Mesh net buffer.

Available options:

- NONE (BLE_MESH_NET_BUF_TRACE_LEVEL_NONE)
- ERROR (BLE_MESH_NET_BUF_TRACE_LEVEL_ERROR)
- WARNING (BLE_MESH_NET_BUF_TRACE_LEVEL_WARNING)
- INFO (BLE_MESH_NET_BUF_TRACE_LEVEL_INFO)
- DEBUG (BLE_MESH_NET_BUF_TRACE_LEVEL_DEBUG)
- VERBOSE (BLE_MESH_NET_BUF_TRACE_LEVEL_VERBOSE)

CONFIG_BLE_MESH_CLIENT_MSG_TIMEOUT

Timeout(ms) for client message response

Found in: Component config > CONFIG_BLE_MESH

Timeout value used by the node to get response of the acknowledged message which is sent by the client model. This value indicates the maximum time that a client model waits for the response of the sent acknowledged messages. If a client model uses 0 as the timeout value when sending acknowledged messages, then the default value will be used which is four seconds.

Support for BLE Mesh Foundation models

Contains:

- *CONFIG_BLE_MESH_CFG_CLI*

- *CONFIG_BLE_MESH_HEALTH_CLI*
- *CONFIG_BLE_MESH_HEALTH_SRV*

CONFIG_BLE_MESH_CFG_CLI

Configuration Client model

Found in: Component config > CONFIG_BLE_MESH > Support for BLE Mesh Foundation models

Enable support for Configuration Client model.

CONFIG_BLE_MESH_HEALTH_CLI

Health Client model

Found in: Component config > CONFIG_BLE_MESH > Support for BLE Mesh Foundation models

Enable support for Health Client model.

CONFIG_BLE_MESH_HEALTH_SRV

Health Server model

Found in: Component config > CONFIG_BLE_MESH > Support for BLE Mesh Foundation models

Enable support for Health Server model.

Support for BLE Mesh Client/Server models

Contains:

- *CONFIG_BLE_MESH_GENERIC_ONOFF_CLI*
- *CONFIG_BLE_MESH_GENERIC_LEVEL_CLI*
- *CONFIG_BLE_MESH_GENERIC_DEF_TRANS_TIME_CLI*
- *CONFIG_BLE_MESH_GENERIC_POWER_ONOFF_CLI*
- *CONFIG_BLE_MESH_GENERIC_POWER_LEVEL_CLI*
- *CONFIG_BLE_MESH_GENERIC_BATTERY_CLI*
- *CONFIG_BLE_MESH_GENERIC_LOCATION_CLI*
- *CONFIG_BLE_MESH_GENERIC_PROPERTY_CLI*

- *CONFIG_BLE_MESH_SENSOR_CLI*
- *CONFIG_BLE_MESH_TIME_CLI*
- *CONFIG_BLE_MESH_SCENE_CLI*
- *CONFIG_BLE_MESH_SCHEDULER_CLI*
- *CONFIG_BLE_MESH_LIGHT_LIGHTNESS_CLI*
- *CONFIG_BLE_MESH_LIGHT_CTL_CLI*
- *CONFIG_BLE_MESH_LIGHT_HSL_CLI*
- *CONFIG_BLE_MESH_LIGHT_XYL_CLI*
- *CONFIG_BLE_MESH_LIGHT_LC_CLI*
- *CONFIG_BLE_MESH_GENERIC_SERVER*
- *CONFIG_BLE_MESH_SENSOR_SERVER*
- *CONFIG_BLE_MESH_TIME_SCENE_SERVER*
- *CONFIG_BLE_MESH_LIGHTING_SERVER*

CONFIG_BLE_MESH_GENERIC_ONOFF_CLI

Generic OnOff Client model

Found in: Component config > CONFIG_BLE_MESH > Support for BLE Mesh Client/Server models

Enable support for Generic OnOff Client model.

CONFIG_BLE_MESH_GENERIC_LEVEL_CLI

Generic Level Client model

Found in: Component config > CONFIG_BLE_MESH > Support for BLE Mesh Client/Server models

Enable support for Generic Level Client model.

CONFIG_BLE_MESH_GENERIC_DEF_TRANS_TIME_CLI

Generic Default Transition Time Client model

Found in: Component config > CONFIG_BLE_MESH > Support for BLE Mesh Client/Server models

Enable support for Generic Default Transition Time Client model.

CONFIG_BLE_MESH_GENERIC_POWER_ONOFF_CLI

Generic Power OnOff Client model

Found in: Component config > CONFIG_BLE_MESH > Support for BLE Mesh Client/Server models

Enable support for Generic Power OnOff Client model.

CONFIG_BLE_MESH_GENERIC_POWER_LEVEL_CLI

Generic Power Level Client model

Found in: Component config > CONFIG_BLE_MESH > Support for BLE Mesh Client/Server models

Enable support for Generic Power Level Client model.

CONFIG_BLE_MESH_GENERIC_BATTERY_CLI

Generic Battery Client model

Found in: Component config > CONFIG_BLE_MESH > Support for BLE Mesh Client/Server models

Enable support for Generic Battery Client model.

CONFIG_BLE_MESH_GENERIC_LOCATION_CLI

Generic Location Client model

Found in: Component config > CONFIG_BLE_MESH > Support for BLE Mesh Client/Server models

Enable support for Generic Location Client model.

CONFIG_BLE_MESH_GENERIC_PROPERTY_CLI

Generic Property Client model

Found in: Component config > CONFIG_BLE_MESH > Support for BLE Mesh Client/Server models

Enable support for Generic Property Client model.

CONFIG_BLE_MESH_SENSOR_CLI

Sensor Client model

Found in: Component config > CONFIG_BLE_MESH > Support for BLE Mesh Client/Server models

Enable support for Sensor Client model.

CONFIG_BLE_MESH_TIME_CLI

Time Client model

Found in: Component config > CONFIG_BLE_MESH > Support for BLE Mesh Client/Server models

Enable support for Time Client model.

CONFIG_BLE_MESH_SCENE_CLI

Scene Client model

Found in: Component config > CONFIG_BLE_MESH > Support for BLE Mesh Client/Server models

Enable support for Scene Client model.

CONFIG_BLE_MESH_SCHEDULER_CLI

Scheduler Client model

Found in: Component config > CONFIG_BLE_MESH > Support for BLE Mesh Client/Server models

Enable support for Scheduler Client model.

CONFIG_BLE_MESH_LIGHT_LIGHTNESS_CLI

Light Lightness Client model

Found in: Component config > CONFIG_BLE_MESH > Support for BLE Mesh Client/Server models

Enable support for Light Lightness Client model.

CONFIG_BLE_MESH_LIGHT_CTL_CLI

Light CTL Client model

Found in: Component config > CONFIG_BLE_MESH > Support for BLE Mesh Client/Server models

Enable support for Light CTL Client model.

CONFIG_BLE_MESH_LIGHT_HSL_CLI

Light HSL Client model

Found in: Component config > CONFIG_BLE_MESH > Support for BLE Mesh Client/Server models

Enable support for Light HSL Client model.

CONFIG_BLE_MESH_LIGHT_XYL_CLI

Light XYL Client model

Found in: Component config > CONFIG_BLE_MESH > Support for BLE Mesh Client/Server models

Enable support for Light XYL Client model.

CONFIG_BLE_MESH_LIGHT_LC_CLI

Light LC Client model

Found in: Component config > CONFIG_BLE_MESH > Support for BLE Mesh Client/Server models

Enable support for Light LC Client model.

CONFIG_BLE_MESH_GENERIC_SERVER

Generic server models

Found in: Component config > CONFIG_BLE_MESH > Support for BLE Mesh Client/Server models

Enable support for Generic server models.

CONFIG_BLE_MESH_SENSOR_SERVER

Sensor server models

Found in: Component config > CONFIG_BLE_MESH > Support for BLE Mesh Client/Server models

Enable support for Sensor server models.

CONFIG_BLE_MESH_TIME_SCENE_SERVER

Time and Scenes server models

Found in: Component config > CONFIG_BLE_MESH > Support for BLE Mesh Client/Server models

Enable support for Time and Scenes server models.

CONFIG_BLE_MESH_LIGHTING_SERVER

Lighting server models

Found in: Component config > CONFIG_BLE_MESH > Support for BLE Mesh Client/Server models

Enable support for Lighting server models.

CONFIG_BLE_MESH_IV_UPDATE_TEST

Test the IV Update Procedure

Found in: Component config > CONFIG_BLE_MESH

This option removes the 96 hour limit of the IV Update Procedure and lets the state to be changed at any time. If IV Update test mode is going to be used, this option should be enabled.

BLE Mesh specific test option

Contains:

- *CONFIG_BLE_MESH_SELF_TEST*
- *CONFIG_BLE_MESH_SHELL*
- *CONFIG_BLE_MESH_DEBUG*

CONFIG_BLE_MESH_SELF_TEST

Perform BLE Mesh self-tests

Found in: Component config > CONFIG_BLE_MESH > BLE Mesh specific test option

This option adds extra self-tests which are run every time BLE Mesh networking is initialized.

CONFIG_BLE_MESH_TEST_AUTO_ENTER_NETWORK

Unprovisioned device enters mesh network automatically

Found in: Component config > CONFIG_BLE_MESH > BLE Mesh specific test option > CONFIG_BLE_MESH_SELF_TEST

With this option enabled, an unprovisioned device can automatically enters mesh network using a specific test function without the pro- visioning procedure. And on the Provisioner side, a test function needs to be invoked to add the node information into the mesh stack.

CONFIG_BLE_MESH_TEST_USE_WHITE_LIST

Use white list to filter mesh advertising packets

Found in: Component config > CONFIG_BLE_MESH > BLE Mesh specific test option > CONFIG_BLE_MESH_SELF_TEST

With this option enabled, users can use white list to filter mesh advertising packets while scanning.

CONFIG_BLE_MESH_SHELL

Enable BLE Mesh shell

Found in: Component config > CONFIG_BLE_MESH > BLE Mesh specific test option

Activate shell module that provides BLE Mesh commands to the console.

CONFIG_BLE_MESH_DEBUG

Enable BLE Mesh debug logs

Found in: Component config > CONFIG_BLE_MESH > BLE Mesh specific test option

Enable debug logs for the BLE Mesh functionality.

CONFIG_BLE_MESH_DEBUG_NET

Network layer debug

Found in: *Component config* > *CONFIG_BLE_MESH* > *BLE Mesh specific test option* > *CONFIG_BLE_MESH_DEBUG*

Enable Network layer debug logs for the BLE Mesh functionality.

CONFIG_BLE_MESH_DEBUG_TRANS

Transport layer debug

Found in: *Component config* > *CONFIG_BLE_MESH* > *BLE Mesh specific test option* > *CONFIG_BLE_MESH_DEBUG*

Enable Transport layer debug logs for the BLE Mesh functionality.

CONFIG_BLE_MESH_DEBUG_BEACON

Beacon debug

Found in: *Component config* > *CONFIG_BLE_MESH* > *BLE Mesh specific test option* > *CONFIG_BLE_MESH_DEBUG*

Enable Beacon-related debug logs for the BLE Mesh functionality.

CONFIG_BLE_MESH_DEBUG_CRYPTO

Crypto debug

Found in: *Component config* > *CONFIG_BLE_MESH* > *BLE Mesh specific test option* > *CONFIG_BLE_MESH_DEBUG*

Enable cryptographic debug logs for the BLE Mesh functionality.

CONFIG_BLE_MESH_DEBUG_PROV

Provisioning debug

Found in: *Component config* > *CONFIG_BLE_MESH* > *BLE Mesh specific test option* > *CONFIG_BLE_MESH_DEBUG*

Enable Provisioning debug logs for the BLE Mesh functionality.

CONFIG_BLE_MESH_DEBUG_ACCESS

Access layer debug

Found in: *Component config* > *CONFIG_BLE_MESH* > *BLE Mesh specific test option* > *CONFIG_BLE_MESH_DEBUG*

Enable Access layer debug logs for the BLE Mesh functionality.

CONFIG_BLE_MESH_DEBUG_MODEL

Foundation model debug

Found in: *Component config* > *CONFIG_BLE_MESH* > *BLE Mesh specific test option* > *CONFIG_BLE_MESH_DEBUG*

Enable Foundation Models debug logs for the BLE Mesh functionality.

CONFIG_BLE_MESH_DEBUG_ADV

Advertising debug

Found in: *Component config* > *CONFIG_BLE_MESH* > *BLE Mesh specific test option* > *CONFIG_BLE_MESH_DEBUG*

Enable advertising debug logs for the BLE Mesh functionality.

CONFIG_BLE_MESH_DEBUG_LOW_POWER

Low Power debug

Found in: *Component config* > *CONFIG_BLE_MESH* > *BLE Mesh specific test option* > *CONFIG_BLE_MESH_DEBUG*

Enable Low Power debug logs for the BLE Mesh functionality.

CONFIG_BLE_MESH_DEBUG_FRIEND

Friend debug

Found in: *Component config* > *CONFIG_BLE_MESH* > *BLE Mesh specific test option* > *CONFIG_BLE_MESH_DEBUG*

Enable Friend debug logs for the BLE Mesh functionality.

CONFIG_BLE_MESH_DEBUG_PROXY

Proxy debug

Found in: Component config > CONFIG_BLE_MESH > BLE Mesh specific test option > CONFIG_BLE_MESH_DEBUG

Enable Proxy protocol debug logs for the BLE Mesh functionality.

Driver configurations

Contains:

- *ADC configuration*
- *SPI configuration*
- *CAN Configuration*
- *UART configuration*

ADC configuration

Contains:

- *CONFIG_ADC_FORCE_XPD_FSM*
- *CONFIG_ADC2_DISABLE_DAC*

CONFIG_ADC_FORCE_XPD_FSM

Use the FSM to control ADC power

Found in: Component config > Driver configurations > ADC configuration

ADC power can be controlled by the FSM instead of software. This allows the ADC to be shut off when it is not working leading to lower power consumption. However using the FSM control ADC power will increase the noise of ADC.

CONFIG_ADC2_DISABLE_DAC

Disable DAC when ADC2 is used on GPIO 25 and 26

Found in: Component config > Driver configurations > ADC configuration

If this is set, the ADC2 driver will disables the output of the DAC corresponding to the specified channel. This is the default value.

For testing, disable this option so that we can measure the output of DAC by internal ADC.

SPI configuration

Contains:

- *CONFIG_SPI_MASTER_IN_IRAM*
- *CONFIG_SPI_MASTER_ISR_IN_IRAM*
- *CONFIG_SPI_SLAVE_IN_IRAM*
- *CONFIG_SPI_SLAVE_ISR_IN_IRAM*

CONFIG_SPI_MASTER_IN_IRAM

Place transmitting functions of SPI master into IRAM

Found in: Component config > Driver configurations > SPI configuration

Normally only the ISR of SPI master is placed in the IRAM, so that it can work without the flash when interrupt is triggered. For other functions, there' s some possibility that the flash cache miss when running inside and out of SPI functions, which may increase the interval of SPI transactions. Enable this to put `queue\_trans`, `get\_trans\_result` and `transmit` functions into the IRAM to avoid possible cache miss.

During unit test, this is enabled to measure the ideal case of api.

CONFIG_SPI_MASTER_ISR_IN_IRAM

Place SPI master ISR function into IRAM

Found in: Component config > Driver configurations > SPI configuration

Place the SPI master ISR in to IRAM to avoid possible cache miss.

Also you can forbid the ISR being disabled during flash writing access, by add ESP_INTR_FLAG_IRAM when initializing the driver.

CONFIG_SPI_SLAVE_IN_IRAM

Place transmitting functions of SPI slave into IRAM

Found in: Component config > Driver configurations > SPI configuration

Normally only the ISR of SPI slave is placed in the IRAM, so that it can work without the flash when interrupt is triggered. For other functions, there' s some possibility that the flash cache miss when running inside and out of SPI functions, which may increase the interval of SPI

transactions. Enable this to put `queue\_trans`, `get\_trans\_result` and `transmit` functions into the IRAM to avoid possible cache miss.

CONFIG_SPI_SLAVE_ISR_IN_IRAM

Place SPI slave ISR function into IRAM

Found in: Component config > Driver configurations > SPI configuration

Place the SPI slave ISR in to IRAM to avoid possible cache miss.

Also you can forbid the ISR being disabled during flash writing access, by add ESP_INTR_FLAG_IRAM when initializing the driver.

CAN Configuration

Contains:

- *CONFIG_CAN_ISR_IN_IRAM*

CONFIG_CAN_ISR_IN_IRAM

Place CAN ISR function into IRAM

Found in: Component config > Driver configurations > CAN Configuration

Place the CAN ISR in to IRAM. This will allow the ISR to avoid cache misses, and also be able to run whilst the cache is disabled (such as when writing to SPI Flash). Note that if this option is enabled: - Users should also set the ESP_INTR_FLAG_IRAM in the driver configuration structure when installing the driver (see docs for specifics). - Alert logging (i.e., setting of the CAN_ALERT_AND_LOG flag) will have no effect.

UART configuration

Contains:

- *CONFIG_UART_ISR_IN_IRAM*

CONFIG_UART_ISR_IN_IRAM

Place UART ISR function into IRAM

Found in: Component config > Driver configurations > UART configuration

If this option is not selected, UART interrupt will be disabled for a long time and may cause data lost when doing spi flash operation.

eFuse Bit Manager

Contains:

- *CONFIG_EFUSE_CUSTOM_TABLE*
- *CONFIG_EFUSE_VIRTUAL*
- *CONFIG_EFUSE_CODE_SCHEME_SELECTOR*

CONFIG_EFUSE_CUSTOM_TABLE

Use custom eFuse table

Found in: Component config > eFuse Bit Manager

Allows to generate a structure for eFuse from the CSV file.

CONFIG_EFUSE_CUSTOM_TABLE_FILENAME

Custom eFuse CSV file

Found in: Component config > eFuse Bit Manager > CONFIG_EFUSE_CUSTOM_TABLE

Name of the custom eFuse CSV filename. This path is evaluated relative to the project root directory.

CONFIG_EFUSE_VIRTUAL

Simulate eFuse operations in RAM

Found in: Component config > eFuse Bit Manager

All read and writes operations are redirected to RAM instead of eFuse registers. If this option is set, all permanent changes (via eFuse) are disabled. Log output will state changes which would be applied, but they will not be.

CONFIG_EFUSE_CODE_SCHEME_SELECTOR

Coding Scheme Compatibility

Found in: Component config > eFuse Bit Manager

Selector eFuse code scheme.

Available options:

- None Only (EFUSE_CODE_SCHEME_COMPAT_NONE)

- 3/4 and None (EFUSE_CODE_SCHEME_COMPAT_3_4)
- Repeat, 3/4 and None (common table does not support it) (EFUSE_CODE_SCHEME_COMPAT_REPEAT)

ESP32-specific

Contains:

- *CONFIG_ESP32_REV_MIN*
- *CONFIG_ESP32_DEFAULT_CPU_FREQ_MHZ*
- *CONFIG_SPIRAM_SUPPORT*
- *CONFIG_ESP32_TRAX*
- *CONFIG_NUMBER_OF_UNIVERSAL_MAC_ADDRESS*
- *CONFIG_SYSTEM_EVENT_QUEUE_SIZE*
- *CONFIG_SYSTEM_EVENT_TASK_STACK_SIZE*
- *CONFIG_MAIN_TASK_STACK_SIZE*
- *CONFIG_IPC_TASK_STACK_SIZE*
- *CONFIG_TIMER_TASK_STACK_SIZE*
- *CONFIG_NEWLIB_STDOUT_LINE_ENDING*
- *CONFIG_NEWLIB_STDIN_LINE_ENDING*
- *CONFIG_NEWLIB_NANO_FORMAT*
- *CONFIG_CONSOLE_UART*
- *CONFIG_CONSOLE_UART_NUM*
- *CONFIG_CONSOLE_UART_TX_GPIO*
- *CONFIG_CONSOLE_UART_RX_GPIO*
- *CONFIG_CONSOLE_UART_BAUDRATE*
- *CONFIG_ULP_COPROC_ENABLED*
- *CONFIG_ESP32_PANIC*
- *CONFIG_GDBSTUB_SUPPORT_TASKS*
- *CONFIG_ESP32_DEBUG_OCDAWARE*
- *CONFIG_ESP32_DEBUG_STUBS_ENABLE*
- *CONFIG_INT_WDT*

- *CONFIG_TASK_WDT*
- *CONFIG_BROWNOUT_DET*
- *CONFIG_REDUCE_PHY_TX_POWER*
- *CONFIG_ESP32_TIME_SYSCALL*
- *CONFIG_ESP32_RTC_CLOCK_SOURCE*
- *CONFIG_ESP32_RTC_EXTERNAL_CRYSTAL_ADDITIONAL_CURRENT*
- *CONFIG_ESP32_RTC_CLK_CAL_CYCLES*
- *CONFIG_ESP32_RTC_XTAL_CAL_RETRY*
- *CONFIG_ESP32_RTC_XTAL_BOOTSTRAP_CYCLES*
- *CONFIG_ESP32_DEEP_SLEEP_WAKEUP_DELAY*
- *CONFIG_ESP32_XTAL_FREQ_SEL*
- *CONFIG_DISABLE_BASIC_ROM_CONSOLE*
- *CONFIG_NO_BLOBS*
- *CONFIG_ESP_TIMER_PROFILING*
- *CONFIG_COMPATIBLE_PRE_V2_1_BOOTLOADERS*
- *CONFIG_ESP32_COMPATIBLE_PRE_V3_1_BOOTLOADERS*
- *CONFIG_ESP_ERR_TO_NAME_LOOKUP*
- *CONFIG_ESP32_RTCDATA_IN_FAST_MEM*
- *CONFIG_ESP32_DPORT_DIS_INTERRUPT_LVL*

CONFIG_ESP32_REV_MIN

Minimum Supported ESP32 Revision

Found in: Component config > ESP32-specific

Minimum revision that ESP-IDF would support. ESP-IDF performs different strategy on different esp32 revision.

Available options:

- Rev 0 (ESP32_REV_MIN_0)
- Rev 1 (ESP32_REV_MIN_1)
- Rev 2 (ESP32_REV_MIN_2)
- Rev 3 (ESP32_REV_MIN_3)

CONFIG_ESP32_DEFAULT_CPU_FREQ_MHZ

CPU frequency

Found in: Component config > ESP32-specific

CPU frequency to be set on application startup.

Available options:

- 80 MHz (ESP32_DEFAULT_CPU_FREQ_80)
- 160 MHz (ESP32_DEFAULT_CPU_FREQ_160)
- 240 MHz (ESP32_DEFAULT_CPU_FREQ_240)

CONFIG_SPIRAM_SUPPORT

Support for external, SPI-connected RAM

Found in: Component config > ESP32-specific

This enables support for an external SPI RAM chip, connected in parallel with the main SPI flash chip.

SPI RAM config

Contains:

- *CONFIG_SPIRAM_BOOT_INIT*
- *CONFIG_SPIRAM_USE*
- *CONFIG_SPIRAM_TYPE*
- *CONFIG_SPIRAM_SPEED*
- *CONFIG_SPIRAM_MEMTEST*
- *CONFIG_SPIRAM_CACHE_WORKAROUND*
- *CONFIG_SPIRAM_BANKSWITCH_ENABLE*
- *CONFIG_SPIRAM_MALLOC_ALWAYSINTERNAL*
- *CONFIG_WIFI_LWIP_ALLOCATION_FROM_SPIRAM_FIRST*
- *CONFIG_SPIRAM_MALLOC_RESERVE_INTERNAL*
- *CONFIG_SPIRAM_ALLOW_STACK_EXTERNAL_MEMORY*
- *CONFIG_SPIRAM_ALLOW_BSS_SEG_EXTERNAL_MEMORY*
- *CONFIG_SPIRAM_OCCUPY_SPI_HOST*

- *PSRAM clock and cs IO for ESP32-DOWD*
- *PSRAM clock and cs IO for ESP32-D2WD*
- *PSRAM clock and cs IO for ESP32-PICO*
- *CONFIG_SPIRAM_SPIWP_SD3_PIN*
- *CONFIG_SPIRAM_2T_MODE*

CONFIG_SPIRAM_BOOT_INIT

Initialize SPI RAM when booting the ESP32

Found in: Component config > ESP32-specific > CONFIG_SPIRAM_SUPPORT > SPI RAM config

If this is enabled, the SPI RAM will be enabled during initial boot. Unless you have specific requirements, you' ll want to leave this enabled so memory allocated during boot-up can also be placed in SPI RAM.

CONFIG_SPIRAM_IGNORE_NOTFOUND

Ignore PSRAM when not found

Found in: Component config > ESP32-specific > CONFIG_SPIRAM_SUPPORT > SPI RAM config > CONFIG_SPIRAM_BOOT_INIT

Normally, if psram initialization is enabled during compile time but not found at runtime, it is seen as an error making the ESP32 panic. If this is enabled, the ESP32 will keep on running but will not add the (non-existing) RAM to any allocator.

CONFIG_SPIRAM_USE

SPI RAM access method

Found in: Component config > ESP32-specific > CONFIG_SPIRAM_SUPPORT > SPI RAM config

The SPI RAM can be accessed in multiple methods: by just having it available as an unmanaged memory region in the ESP32 memory map, by integrating it in the ESP32s heap as 'special' memory needing heap_caps_malloc to allocate, or by fully integrating it making malloc() also able to return SPI RAM pointers.

Available options:

- Integrate RAM into ESP32 memory map (SPIRAM_USE_MEMMAP)

- Make RAM allocatable using heap_caps_malloc(…, MALLOC_CAP_SPIRAM) (SPIRAM_USE_CAPS_ALLOC)
- Make RAM allocatable using malloc() as well (SPIRAM_USE_MALLOC)

CONFIG_SPIRAM_TYPE

Type of SPI RAM chip in use

Found in: Component config > ESP32-specific > CONFIG_SPIRAM_SUPPORT > SPI RAM config

Available options:

- Auto-detect (SPIRAM_TYPE_AUTO)
- ESP-PSRAM32 or IS25WP032 (SPIRAM_TYPE_ESPPSRAM32)
- ESP-PSRAM64 or LY68L6400 (SPIRAM_TYPE_ESPPSRAM64)

CONFIG_SPIRAM_SPEED

Set RAM clock speed

Found in: Component config > ESP32-specific > CONFIG_SPIRAM_SUPPORT > SPI RAM config

Select the speed for the SPI RAM chip. If SPI RAM is enabled, we only support three combinations of SPI speed mode we supported now:

1. Flash SPI running at 40Mhz and RAM SPI running at 40Mhz
2. Flash SPI running at 80Mhz and RAM SPI running at 40Mhz
3. Flash SPI running at 80Mhz and RAM SPI running at 80Mhz

Note: If the third mode(80Mhz+80Mhz) is enabled for SPI RAM of type 32MBit, one of the HSPI/VSPI host will be occupied by the system. Which SPI host to use can be selected by the config item SPIRAM_OCCUPY_SPI_HOST. Application code should never touch HSPI/VSPI hardware in this case. The option to select 80MHz will only be visible if the flash SPI speed is also 80MHz. (ESPTOOLPY_FLASHFREQ_80M is true)

Available options:

- 40MHz clock speed (SPIRAM_SPEED_40M)
- 80MHz clock speed (SPIRAM_SPEED_80M)

CONFIG_SPIRAM_MEMTEST

Run memory test on SPI RAM initialization

Found in: Component config > ESP32-specific > CONFIG_SPIRAM_SUPPORT > SPI RAM config

Runs a rudimentary memory test on initialization. Aborts when memory test fails. Disable this for slightly faster startop.

CONFIG_SPIRAM_CACHE_WORKAROUND

Enable workaround for bug in SPI RAM cache for Rev1 ESP32s

Found in: Component config > ESP32-specific > CONFIG_SPIRAM_SUPPORT > SPI RAM config

Revision 1 of the ESP32 has a bug that can cause a write to PSRAM not to take place in some situations when the cache line needs to be fetched from external RAM and an interrupt occurs. This enables a fix in the compiler (-mfix-esp32-psram-cache-issue) that makes sure the specific code that is vulnerable to this will not be emitted.

This will also not use any bits of newlib that are located in ROM, opting for a version that is compiled with the workaround and located in flash instead.

The workaround is not required for ESP32 revision 3 and above.

CONFIG_SPIRAM_BANKSWITCH_ENABLE

Enable bank switching for >4MiB external RAM

Found in: Component config > ESP32-specific > CONFIG_SPIRAM_SUPPORT > SPI RAM config

The ESP32 only supports 4MiB of external RAM in its address space. The hardware does support larger memories, but these have to be bank-switched in and out of this address space. Enabling this allows you to reserve some MMU pages for this, which allows the use of the esp_himem api to manage these banks.

#Note that this is limited to 62 banks, as esp_spiram_writeback_cache needs some kind of mapping of #some banks below that mark to work. We cannot at this moment guarantee this to exist when himem is #enabled.

If spiram 2T mode is enabled, the size of 64Mbit psram will be changed as 32Mbit, so himem will be unusable.

CONFIG_SPIRAM_BANKSWITCH_RESERVE

Amount of 32K pages to reserve for bank switching

Found in: Component config > ESP32-specific > CONFIG_SPIRAM_SUPPORT > SPI RAM config > CONFIG_SPIRAM_BANKSWITCH_ENABLE

Select the amount of banks reserved for bank switching. Note that the amount of RAM allocatable with malloc/esp_heap_alloc_caps will decrease by 32K for each page reserved here.

Note that this reservation is only actually done if your program actually uses the himem API. Without any himem calls, the reservation is not done and the original amount of memory will be available to malloc/esp_heap_alloc_caps.

CONFIG_SPIRAM_MALLOC_ALWAYSINTERNAL

Maximum malloc() size, in bytes, to always put in internal memory

Found in: Component config > ESP32-specific > CONFIG_SPIRAM_SUPPORT > SPI RAM config

If malloc() is capable of also allocating SPI-connected ram, its allocation strategy will prefer to allocate chunks less than this size in internal memory, while allocations larger than this will be done from external RAM. If allocation from the preferred region fails, an attempt is made to allocate from the non-preferred region instead, so malloc() will not suddenly fail when either internal or external memory is full.

CONFIG_WIFI_LWIP_ALLOCATION_FROM_SPIRAM_FIRST

Try to allocate memories of WiFi and LWIP in SPIRAM firstly. If failed, allocate internal memory

Found in: Component config > ESP32-specific > CONFIG_SPIRAM_SUPPORT > SPI RAM config

Try to allocate memories of WiFi and LWIP in SPIRAM firstly. If failed, try to allocate internal memory then.

CONFIG_SPIRAM_MALLOC_RESERVE_INTERNAL

Reserve this amount of bytes for data that specifically needs to be in DMA or internal memory

Found in: Component config > ESP32-specific > CONFIG_SPIRAM_SUPPORT > SPI RAM config

Because the external/internal RAM allocation strategy is not always perfect, it sometimes may happen that the internal memory is entirely filled up. This causes allocations that are specifically done in internal memory, for example the stack for new tasks or memory to service DMA or have memory that' s also available when SPI cache is down, to fail. This option reserves a pool specifically for requests like that; the memory in this pool is not given out when a normal malloc() is called.

Set this to 0 to disable this feature.

Note that because FreeRTOS stacks are forced to internal memory, they will also use this memory pool; be sure to keep this in mind when adjusting this value.

Note also that the DMA reserved pool may not be one single contiguous memory region, depending on the configured size and the static memory usage of the app.

CONFIG_SPIRAM_ALLOW_STACK_EXTERNAL_MEMORY

Allow external memory as an argument to xTaskCreateStatic

Found in: Component config > ESP32-specific > CONFIG_SPIRAM_SUPPORT > SPI RAM config

Because some bits of the ESP32 code environment cannot be recompiled with the cache workaround, normally tasks cannot be safely run with their stack residing in external memory; for this reason xTaskCreate and friends always allocate stack in internal memory and xTaskCreateStatic will check if the memory passed to it is in internal memory. If you have a task that needs a large amount of stack and does not call on ROM code in any way (no direct calls, but also no Bluetooth/WiFi), you can try to disable this and use xTaskCreateStatic to create the tasks stack in external memory.

CONFIG_SPIRAM_ALLOW_BSS_SEG_EXTERNAL_MEMORY

Allow .bss segment placed in external memory

Found in: Component config > ESP32-specific > CONFIG_SPIRAM_SUPPORT > SPI RAM config

If enabled the option,and add EXT_RAM_ATTR defined your variable,then your variable will be placed in PSRAM instead of internal memory, and placed most of variables of lwip,net802.11,pp,bluedroid library to external memory defaultly.

CONFIG_SPIRAM_OCCUPY_SPI_HOST

SPI host to use for 32MBit PSRAM

Found in: Component config > ESP32-specific > CONFIG_SPIRAM_SUPPORT > SPI RAM config

When both flash and PSRAM is working under 80MHz, and the PSRAM is of type 32MBit, one of the HSPI/VSPI host will be used to output the clock. Select which one to use here.

Available options:

- HSPI host (SPI2) (SPIRAM_OCCUPY_HSPI_HOST)
- VSPI host (SPI3) (SPIRAM_OCCUPY_VSPI_HOST)
- Will not try to use any host, will abort if not able to use the PSRAM (SPIRAM_OCCUPY_NO_HOST)

PSRAM clock and cs IO for ESP32-DOWD

Contains:

- *CONFIG_D0WD_PSRAM_CLK_IO*
- *CONFIG_D0WD_PSRAM_CS_IO*

CONFIG_D0WD_PSRAM_CLK_IO

PSRAM CLK IO number

Found in: Component config > ESP32-specific > CONFIG_SPIRAM_SUPPORT > SPI RAM config > PSRAM clock and cs IO for ESP32-DOWD

The PSRAM CLOCK IO can be any unused GPIO, user can config it based on hardware design. If user use 1.8V flash and 1.8V psram, this value can only be one of 6, 7, 8, 9, 10, 11, 16, 17.

CONFIG_D0WD_PSRAM_CS_IO

PSRAM CS IO number

Found in: Component config > ESP32-specific > CONFIG_SPIRAM_SUPPORT > SPI RAM config > PSRAM clock and cs IO for ESP32-DOWD

The PSRAM CS IO can be any unused GPIO, user can config it based on hardware design. If user use 1.8V flash and 1.8V psram, this value can only be one of 6, 7, 8, 9, 10, 11, 16, 17.

PSRAM clock and cs IO for ESP32-D2WD

Contains:

- *CONFIG_D2WD_PSRAM_CLK_IO*

- *CONFIG_D2WD_PSRAM_CS_IO*

CONFIG_D2WD_PSRAM_CLK_IO

PSRAM CLK IO number

Found in: Component config > ESP32-specific > CONFIG_SPIRAM_SUPPORT > SPI RAM config > PSRAM clock and cs IO for ESP32-D2WD

User can config it based on hardware design. For ESP32-D2WD chip, the psram can only be 1.8V psram, so this value can only be one of 6, 7, 8, 9, 10, 11, 16, 17.

CONFIG_D2WD_PSRAM_CS_IO

PSRAM CS IO number

Found in: Component config > ESP32-specific > CONFIG_SPIRAM_SUPPORT > SPI RAM config > PSRAM clock and cs IO for ESP32-D2WD

User can config it based on hardware design. For ESP32-D2WD chip, the psram can only be 1.8V psram, so this value can only be one of 6, 7, 8, 9, 10, 11, 16, 17.

PSRAM clock and cs IO for ESP32-PICO

Contains:

- *CONFIG_PICO_PSRAM_CS_IO*

CONFIG_PICO_PSRAM_CS_IO

PSRAM CS IO number

Found in: Component config > ESP32-specific > CONFIG_SPIRAM_SUPPORT > SPI RAM config > PSRAM clock and cs IO for ESP32-PICO

The PSRAM CS IO can be any unused GPIO, user can config it based on hardware design.

For ESP32-PICO chip, the psram share clock with flash, so user do not need to configure the clock IO. For the reference hardware design, please refer to https://www.espressif.com/sites/default/files/documentation/esp32-pico-d4_datasheet_en.pdf

CONFIG_SPIRAM_SPIWP_SD3_PIN

SPI PSRAM WP(SD3) Pin when customising pins via eFuse (read help)

Found in: Component config > ESP32-specific > CONFIG_SPIRAM_SUPPORT > SPI RAM config

This value is ignored unless flash mode is set to DIO or DOUT and the SPI flash pins have been overriden by setting the eFuses SPI_PAD_CONFIG_xxx.

When this is the case, the eFuse config only defines 3 of the 4 Quad I/O data pins. The WP pin (aka ESP32 pin "SD_DATA_3" or SPI flash pin "IO2") is not specified in eFuse. And the psram only has QPI mode, the WP pin is necessary, so we need to configure this value here.

When flash mode is set to QIO or QOUT, the PSRAM WP pin will be set as the value configured in bootloader.

For ESP32-PICO chip, the default value of this config should be 7.

CONFIG_SPIRAM_2T_MODE

Enable SPI PSRAM 2T mode

Found in: Component config > ESP32-specific > CONFIG_SPIRAM_SUPPORT > SPI RAM config

Enable this option to fix single bit errors inside 64Mbit PSRAM.

Some 64Mbit PSRAM chips have a hardware issue in the RAM which causes bit errors at multiple fixed bit positions.

Note: If this option is enabled, the 64Mbit PSRAM chip will appear to be 32Mbit in size. Applications will not be affected unless the use the esp_himem APIs, which are not supported in 2T mode.

CONFIG_ESP32_TRAX

Use TRAX tracing feature

Found in: Component config > ESP32-specific

The ESP32 contains a feature which allows you to trace the execution path the processor has taken through the program. This is stored in a chunk of 32K (16K for single-processor) of memory that can't be used for general purposes anymore. Disable this if you do not know what this is.

CONFIG_ESP32_TRAX_TWOBANKS

Reserve memory for tracing both pro as well as app cpu execution

Found in: Component config > ESP32-specific > CONFIG_ESP32_TRAX

The ESP32 contains a feature which allows you to trace the execution path the processor has taken through the program. This is stored in a chunk of 32K (16K for single-processor) of memory that can't be used for general purposes anymore. Disable this if you do not know what this is.

Memory to reverse for trace, used in linker script

CONFIG_NUMBER_OF_UNIVERSAL_MAC_ADDRESS

Number of universally administered (by IEEE) MAC address

Found in: Component config > ESP32-specific

Configure the number of universally administered (by IEEE) MAC addresses. During initialisation, MAC addresses for each network interface are generated or derived from a single base MAC address. If the number of universal MAC addresses is four, all four interfaces (WiFi station, WiFi softap, Bluetooth and Ethernet) receive a universally administered MAC address. These are generated sequentially by adding 0, 1, 2 and 3 (respectively) to the final octet of the base MAC address. If the number of universal MAC addresses is two, only two interfaces (WiFi station and Bluetooth) receive a universally administered MAC address. These are generated sequentially by adding 0 and 1 (respectively) to the base MAC address. The remaining two interfaces (WiFi softap and Ethernet) receive local MAC addresses. These are derived from the universal WiFi station and Bluetooth MAC addresses, respectively. When using the default (Espressif-assigned) base MAC address, either setting can be used. When using a custom universal MAC address range, the correct setting will depend on the allocation of MAC addresses in this range (either 2 or 4 per device.)

Available options:

- Two (TWO_UNIVERSAL_MAC_ADDRESS)
- Four (FOUR_UNIVERSAL_MAC_ADDRESS)

CONFIG_SYSTEM_EVENT_QUEUE_SIZE

System event queue size

Found in: Component config > ESP32-specific

Config system event queue size in different application.

CONFIG_SYSTEM_EVENT_TASK_STACK_SIZE

Event loop task stack size

Found in: Component config > ESP32-specific

Config system event task stack size in different application.

CONFIG_MAIN_TASK_STACK_SIZE

Main task stack size

Found in: Component config > ESP32-specific

Configure the "main task" stack size. This is the stack of the task which calls app_main(). If app_main() returns then this task is deleted and its stack memory is freed.

CONFIG_IPC_TASK_STACK_SIZE

Inter-Processor Call (IPC) task stack size

Found in: Component config > ESP32-specific

Configure the IPC tasks stack size. One IPC task runs on each core (in dual core mode), and allows for cross-core function calls.

See IPC documentation for more details.

The default stack size should be enough for most common use cases. It can be shrunk if you are sure that you do not use any custom IPC functionality.

CONFIG_TIMER_TASK_STACK_SIZE

High-resolution timer task stack size

Found in: Component config > ESP32-specific

Configure the stack size of esp_timer/ets_timer task. This task is used to dispatch callbacks of timers created using ets_timer and esp_timer APIs. If you are seing stack overflow errors in timer task, increase this value.

Note that this is not the same as FreeRTOS timer task. To configure FreeRTOS timer task size, see "FreeRTOS timer task stack size" option in "FreeRTOS" menu.

CONFIG_NEWLIB_STDOUT_LINE_ENDING

Line ending for UART output

Found in: Component config > ESP32-specific

This option allows configuring the desired line endings sent to UART when a newline ('n' , LF) appears on stdout. Three options are possible:

CRLF: whenever LF is encountered, prepend it with CR

LF: no modification is applied, stdout is sent as is

CR: each occurence of LF is replaced with CR

This option doesn't affect behavior of the UART driver (drivers/uart.h).

Available options:

- CRLF (NEWLIB_STDOUT_LINE_ENDING_CRLF)
- LF (NEWLIB_STDOUT_LINE_ENDING_LF)
- CR (NEWLIB_STDOUT_LINE_ENDING_CR)

CONFIG_NEWLIB_STDIN_LINE_ENDING

Line ending for UART input

Found in: Component config > ESP32-specific

This option allows configuring which input sequence on UART produces a newline ('n', LF) on stdin. Three options are possible:

CRLF: CRLF is converted to LF

LF: no modification is applied, input is sent to stdin as is

CR: each occurence of CR is replaced with LF

This option doesn't affect behavior of the UART driver (drivers/uart.h).

Available options:

- CRLF (NEWLIB_STDIN_LINE_ENDING_CRLF)
- LF (NEWLIB_STDIN_LINE_ENDING_LF)
- CR (NEWLIB_STDIN_LINE_ENDING_CR)

CONFIG_NEWLIB_NANO_FORMAT

Enable 'nano' formatting options for printf/scanf family

Found in: Component config > ESP32-specific

ESP32 ROM contains parts of newlib C library, including printf/scanf family of functions. These functions have been compiled with so-called "nano" formatting option. This option doesn't support 64-bit integer formats and C99 features, such as positional arguments.

For more details about "nano" formatting option, please see newlib readme file, search for '–enable-newlib-nano-formatted-io': https://sourceware.org/newlib/README

If this option is enabled, build system will use functions available in ROM, reducing the application binary size. Functions available in ROM run faster than functions which run from flash. Functions available in ROM can also run when flash instruction cache is disabled.

If you need 64-bit integer formatting support or C99 features, keep this option disabled.

CONFIG_CONSOLE_UART

UART for console output

Found in: Component config > ESP32-specific

Select whether to use UART for console output (through stdout and stderr).

- Default is to use UART0 on pins GPIO1(TX) and GPIO3(RX).
- If "Custom" is selected, UART0 or UART1 can be chosen, and any pins can be selected.
- If "None" is selected, there will be no console output on any UART, except for initial output from ROM bootloader. This output can be further suppressed by bootstrapping GPIO13 pin to low logic level.

Available options:

- Default: UART0, TX=GPIO1, RX=GPIO3 (CONSOLE_UART_DEFAULT)
- Custom (CONSOLE_UART_CUSTOM)
- None (CONSOLE_UART_NONE)

CONFIG_CONSOLE_UART_NUM

UART peripheral to use for console output (0-1)

Found in: Component config > ESP32-specific

Due of a ROM bug, UART2 is not supported for console output via ets_printf.

Available options:

- UART0 (CONSOLE_UART_CUSTOM_NUM_0)
- UART1 (CONSOLE_UART_CUSTOM_NUM_1)

CONFIG_CONSOLE_UART_TX_GPIO

UART TX on GPIO#

Found in: Component config > ESP32-specific

CONFIG_CONSOLE_UART_RX_GPIO

UART RX on GPIO#

Found in: Component config > ESP32-specific

CONFIG_CONSOLE_UART_BAUDRATE

UART console baud rate

Found in: Component config > ESP32-specific

CONFIG_ULP_COPROC_ENABLED

Enable Ultra Low Power (ULP) Coprocessor

Found in: Component config > ESP32-specific

Set to 'y' if you plan to load a firmware for the coprocessor.

If this option is enabled, further coprocessor configuration will appear in the Components menu.

CONFIG_ULP_COPROC_RESERVE_MEM

RTC slow memory reserved for coprocessor

Found in: Component config > ESP32-specific > CONFIG_ULP_COPROC_ENABLED

Bytes of memory to reserve for ULP coprocessor firmware & data.

Data is reserved at the beginning of RTC slow memory.

CONFIG_ESP32_PANIC

Panic handler behaviour

Found in: Component config > ESP32-specific

If FreeRTOS detects unexpected behaviour or an unhandled exception, the panic handler is invoked. Configure the panic handlers action here.

Available options:

- Print registers and halt (ESP32_PANIC_PRINT_HALT)

  Outputs the relevant registers over the serial port and halt the processor. Needs a manual reset to restart.

- Print registers and reboot (ESP32_PANIC_PRINT_REBOOT)

  Outputs the relevant registers over the serial port and immediately reset the processor.

- Silent reboot (ESP32_PANIC_SILENT_REBOOT)

  Just resets the processor without outputting anything

- Invoke GDBStub (ESP32_PANIC_GDBSTUB)

  Invoke gdbstub on the serial port, allowing for gdb to attach to it to do a postmortem of the crash.

CONFIG_GDBSTUB_SUPPORT_TASKS

GDBStub: enable listing FreeRTOS tasks

Found in: Component config > ESP32-specific

If enabled, GDBStub can supply the list of FreeRTOS tasks to GDB. Thread list can be queried from GDB using 'info threads' command. Note that if GDB task lists were corrupted, this feature may not work. If GDBStub fails, try disabling this feature.

CONFIG_GDBSTUB_MAX_TASKS

GDBStub: maximum number of tasks supported

Found in: Component config > ESP32-specific > CONFIG_GDBSTUB_SUPPORT_TASKS

Set the number of tasks which GDB Stub will support.

CONFIG_ESP32_DEBUG_OCDAWARE

Make exception and panic handlers JTAG/OCD aware

Found in: Component config > ESP32-specific

The FreeRTOS panic and unhandled exception handers can detect a JTAG OCD debugger and instead of panicking, have the debugger stop on the offending instruction.

CONFIG_ESP32_DEBUG_STUBS_ENABLE

OpenOCD debug stubs

Found in: Component config > ESP32-specific

Debug stubs are used by OpenOCD to execute pre-compiled onboard code which does some useful debugging, e.g. GCOV data dump.

CONFIG_INT_WDT

Interrupt watchdog

Found in: Component config > ESP32-specific

This watchdog timer can detect if the FreeRTOS tick interrupt has not been called for a certain time, either because a task turned off interrupts and did not turn them on for a long time, or because an interrupt handler did not return. It will try to invoke the panic handler first and failing that reset the SoC.

CONFIG_INT_WDT_TIMEOUT_MS

Interrupt watchdog timeout (ms)

Found in: Component config > ESP32-specific > CONFIG_INT_WDT

The timeout of the watchdog, in miliseconds. Make this higher than the FreeRTOS tick rate.

CONFIG_INT_WDT_CHECK_CPU1

Also watch CPU1 tick interrupt

Found in: Component config > ESP32-specific > CONFIG_INT_WDT

Also detect if interrupts on CPU 1 are disabled for too long.

CONFIG_TASK_WDT

Initialize Task Watchdog Timer on startup

Found in: Component config > ESP32-specific

The Task Watchdog Timer can be used to make sure individual tasks are still running. Enabling this option will cause the Task Watchdog Timer to be initialized automatically at startup. The Task Watchdog timer can be initialized after startup as well (see Task Watchdog Timer API Reference)

CONFIG_TASK_WDT_PANIC

Invoke panic handler on Task Watchdog timeout

Found in: Component config > ESP32-specific > CONFIG_TASK_WDT

If this option is enabled, the Task Watchdog Timer will be configured to trigger the panic handler when it times out. This can also be configured at run time (see Task Watchdog Timer API Reference)

CONFIG_TASK_WDT_TIMEOUT_S

Task Watchdog timeout period (seconds)

Found in: Component config > ESP32-specific > CONFIG_TASK_WDT

Timeout period configuration for the Task Watchdog Timer in seconds. This is also configurable at run time (see Task Watchdog Timer API Reference)

CONFIG_TASK_WDT_CHECK_IDLE_TASK_CPU0

Watch CPU0 Idle Task

Found in: Component config > ESP32-specific > CONFIG_TASK_WDT

If this option is enabled, the Task Watchdog Timer will watch the CPU0 Idle Task. Having the Task Watchdog watch the Idle Task allows for detection of CPU starvation as the Idle Task not being called is usually a symptom of CPU starvation. Starvation of the Idle Task is detrimental as FreeRTOS household tasks depend on the Idle Task getting some runtime every now and then.

CONFIG_TASK_WDT_CHECK_IDLE_TASK_CPU1

Watch CPU1 Idle Task

Found in: Component config > ESP32-specific > CONFIG_TASK_WDT

If this option is enabled, the Task Wtachdog Timer will wach the CPU1 Idle Task.

CONFIG_BROWNOUT_DET

Hardware brownout detect & reset

Found in: Component config > ESP32-specific

The ESP32 has a built-in brownout detector which can detect if the voltage is lower than a specific value. If this happens, it will reset the chip in order to prevent unintended behaviour.

CONFIG_BROWNOUT_DET_LVL_SEL

Brownout voltage level

Found in: Component config > ESP32-specific > CONFIG_BROWNOUT_DET

The brownout detector will reset the chip when the supply voltage is approximately below this level. Note that there may be some variation of brownout voltage level between each ESP32 chip.

#The voltage levels here are estimates, more work needs to be done to figure out the exact voltages #of the brownout threshold levels.

Available options:

- 2.43V +/- 0.05 (BROWNOUT_DET_LVL_SEL_0)
- 2.48V +/- 0.05 (BROWNOUT_DET_LVL_SEL_1)
- 2.58V +/- 0.05 (BROWNOUT_DET_LVL_SEL_2)
- 2.62V +/- 0.05 (BROWNOUT_DET_LVL_SEL_3)
- 2.67V +/- 0.05 (BROWNOUT_DET_LVL_SEL_4)
- 2.70V +/- 0.05 (BROWNOUT_DET_LVL_SEL_5)
- 2.77V +/- 0.05 (BROWNOUT_DET_LVL_SEL_6)
- 2.80V +/- 0.05 (BROWNOUT_DET_LVL_SEL_7)

CONFIG_REDUCE_PHY_TX_POWER

Reduce PHY TX power when brownout reset

Found in: Component config > ESP32-specific

When brownout reset occurs, reduce PHY TX power to keep the code running

Note about the use of "FRC1" name: currently FRC1 timer is not used for # high resolution timekeeping anymore. Instead the esp_timer API, implemented # using FRC2 timer, is used. # FRC1 name in the option name is kept for compatibility.

CONFIG_ESP32_TIME_SYSCALL

Timers used for gettimeofday function

Found in: Component config > ESP32-specific

This setting defines which hardware timers are used to implement 'gettimeofday' and 'time' functions in C library.

- If both high-resolution and RTC timers are used, timekeeping will continue in deep sleep. Time will be reported at 1 microsecond resolution. This is the default, and the recommended option.
- If only high-resolution timer is used, gettimeofday will provide time at microsecond resolution. Time will not be preserved when going into deep sleep mode.
- If only RTC timer is used, timekeeping will continue in deep sleep, but time will be measured at 6.(6) microsecond resolution. Also the gettimeofday function itself may take longer to run.

- If no timers are used, gettimeofday and time functions return -1 and set errno to ENOSYS.
- When RTC is used for timekeeping, two RTC_STORE registers are used to keep time in deep sleep mode.

Available options:

- RTC and high-resolution timer (ESP32_TIME_SYSCALL_USE_RTC_FRC1)
- RTC (ESP32_TIME_SYSCALL_USE_RTC)
- High-resolution timer (ESP32_TIME_SYSCALL_USE_FRC1)
- None (ESP32_TIME_SYSCALL_USE_NONE)

CONFIG_ESP32_RTC_CLOCK_SOURCE

RTC clock source

Found in: Component config > ESP32-specific

Choose which clock is used as RTC clock source.

- "Internal 150kHz oscillator" option provides lowest deep sleep current consumption, and does not require extra external components. However frequency stability with respect to temperature is poor, so time may drift in deep/light sleep modes.
- "External 32kHz crystal" provides better frequency stability, at the expense of slightly higher (1uA) deep sleep current consumption.
- "External 32kHz oscillator" allows using 32kHz clock generated by an external circuit. In this case, external clock signal must be connected to 32K_XP pin. Amplitude should be <1.2V in case of sine wave signal, and <1V in case of square wave signal. Common mode voltage should be 0.1 < Vcm < 0.5Vamp, where Vamp is the signal amplitude. Additionally, 1nF capacitor must be connected between 32K_XN pin and ground. 32K_XN pin can not be used as a GPIO in this case.
- "Internal 8.5MHz oscillator divided by 256" option results in higher deep sleep current (by 5uA) but has better frequency stability than the internal 150kHz oscillator. It does not require external components.

Available options:

- Internal 150kHz RC oscillator (ESP32_RTC_CLOCK_SOURCE_INTERNAL_RC)
- External 32kHz crystal (ESP32_RTC_CLOCK_SOURCE_EXTERNAL_CRYSTAL)
- External 32kHz oscillator at 32K_XP pin (ESP32_RTC_CLOCK_SOURCE_EXTERNAL_OSC)
- Internal 8.5MHz oscillator, divided by 256 (~33kHz) (ESP32_RTC_CLOCK_SOURCE_INTERNAL_8MD256)

CONFIG_ESP32_RTC_EXTERNAL_CRYSTAL_ADDITIONAL_CURRENT

Additional current for external 32kHz crystal

Found in: Component config > ESP32-specific

Choose which additional current is used for rtc external crystal.

- With some 32kHz crystal configurations, the X32N and X32P pins may not have enough drive strength to keep the crystal oscillating during deep sleep. If this option is enabled, additional current from touchpad 9 is provided internally to drive the 32kHz crystal. If this option is enabled, deep sleep current is slightly higher (4-5uA) and the touchpad and ULP wakeup sources are not available.

CONFIG_ESP32_RTC_CLK_CAL_CYCLES

Number of cycles for RTC_SLOW_CLK calibration

Found in: Component config > ESP32-specific

When the startup code initializes RTC_SLOW_CLK, it can perform calibration by comparing the RTC_SLOW_CLK frequency with main XTAL frequency. This option sets the number of RTC_SLOW_CLK cycles measured by the calibration routine. Higher numbers increase calibration precision, which may be important for applications which spend a lot of time in deep sleep. Lower numbers reduce startup time.

When this option is set to 0, clock calibration will not be performed at startup, and approximate clock frequencies will be assumed:

- 150000 Hz if internal RC oscillator is used as clock source. For this use value 1024.
- 32768 Hz if the 32k crystal oscillator is used. For this use value 3000 or more. In case more value will help improve the definition of the launch of the crystal. If the crystal could not start, it will be switched to internal RC.

CONFIG_ESP32_RTC_XTAL_CAL_RETRY

Number of attempts to repeat 32k XTAL calibration

Found in: Component config > ESP32-specific

Number of attempts to repeat 32k XTAL calibration before giving up and switching to the internal RC. Increase this option if the 32k crystal oscillator does not start and switches to internal RC.

CONFIG_ESP32_RTC_XTAL_BOOTSTRAP_CYCLES

Bootstrap cycles for external 32kHz crystal

Found in: Component config > ESP32-specific

To reduce the startup time of an external RTC crystal, we bootstrap it with a 32kHz square wave for a fixed number of cycles. Setting 0 will disable bootstrapping (if disabled, the crystal may take longer to start up or fail to oscillate under some conditions).

If this value is too high, a faulty crystal may initially start and then fail. If this value is too low, an otherwise good crystal may not start.

To accurately determine if the crystal has started, set a larger "Number of cycles for RTC_SLOW_CLK calibration" (about 3000).

CONFIG_ESP32_DEEP_SLEEP_WAKEUP_DELAY

Extra delay in deep sleep wake stub (in us)

Found in: Component config > ESP32-specific

When ESP32 exits deep sleep, the CPU and the flash chip are powered on at the same time. CPU will run deep sleep stub first, and then proceed to load code from flash. Some flash chips need sufficient time to pass between power on and first read operation. By default, without any extra delay, this time is approximately 900us, although some flash chip types need more than that.

By default extra delay is set to 2000us. When optimizing startup time for applications which require it, this value may be reduced.

If you are seeing "flash read err, 1000" message printed to the console after deep sleep reset, try increasing this value.

CONFIG_ESP32_XTAL_FREQ_SEL

Main XTAL frequency

Found in: Component config > ESP32-specific

ESP32 currently supports the following XTAL frequencies:

- 26 MHz
- 40 MHz

Startup code can automatically estimate XTAL frequency. This feature uses the internal 8MHz oscillator as a reference. Because the internal oscillator frequency is temperature dependent, it is not recommended to use automatic XTAL frequency detection in applications which need to work at high ambient temperatures and use high-temperature qualified chips and modules.

Available options:

- 40 MHz (ESP32_XTAL_FREQ_40)

- 26 MHz (ESP32_XTAL_FREQ_26)
- Autodetect (ESP32_XTAL_FREQ_AUTO)

CONFIG_DISABLE_BASIC_ROM_CONSOLE

Permanently disable BASIC ROM Console

Found in: Component config > ESP32-specific

If set, the first time the app boots it will disable the BASIC ROM Console permanently (by burning an eFuse).

Otherwise, the BASIC ROM Console starts on reset if no valid bootloader is read from the flash.

(Enabling secure boot also disables the BASIC ROM Console by default.)

CONFIG_NO_BLOBS

No Binary Blobs

Found in: Component config > ESP32-specific

If enabled, this disables the linking of binary libraries in the application build. Note that after enabling this Wi-Fi/Bluetooth will not work.

CONFIG_ESP_TIMER_PROFILING

Enable esp_timer profiling features

Found in: Component config > ESP32-specific

If enabled, esp_timer_dump will dump information such as number of times the timer was started, number of times the timer has triggered, and the total time it took for the callback to run. This option has some effect on timer performance and the amount of memory used for timer storage, and should only be used for debugging/testing purposes.

CONFIG_COMPATIBLE_PRE_V2_1_BOOTLOADERS

App compatible with bootloaders before ESP-IDF v2.1

Found in: Component config > ESP32-specific

Bootloaders before ESP-IDF v2.1 did less initialisation of the system clock. This setting needs to be enabled to build an app which can be booted by these older bootloaders.

If this setting is enabled, the app can be booted by any bootloader from IDF v1.0 up to the current version.

If this setting is disabled, the app can only be booted by bootloaders from IDF v2.1 or newer.

Enabling this setting adds approximately 1KB to the app' s IRAM usage.

CONFIG_ESP32_COMPATIBLE_PRE_V3_1_BOOTLOADERS

App compatible with bootloader and partition table before ESP-IDF v3.1

Found in: Component config > ESP32-specific

Partition tables before ESP-IDF V3.1 do not contain an MD5 checksum field, and the bootloader before ESP-IDF v3.1 cannot read a partition table that contains an MD5 checksum field.

Enable this option only if your app needs to boot on a bootloader and/or partition table that was generated from a version *before* ESP-IDF v3.1.

If this option and Flash Encryption are enabled at the same time, and any data partitions in the partition table are marked Encrypted, then the partition encrypted flag should be manually verified in the app before accessing the partition (see CVE-2021-27926).

CONFIG_ESP_ERR_TO_NAME_LOOKUP

Enable lookup of error code strings

Found in: Component config > ESP32-specific

Functions esp_err_to_name() and esp_err_to_name_r() return string representations of error codes from a pre-generated lookup table. This option can be used to turn off the use of the look-up table in order to save memory but this comes at the price of sacrificing distinguishable (meaningful) output string representations.

CONFIG_ESP32_RTCDATA_IN_FAST_MEM

Place RTC_DATA_ATTR and RTC_RODATA_ATTR variables into RTC fast memory segment

Found in: Component config > ESP32-specific

This option allows to place .rtc_data and .rtc_rodata sections into RTC fast memory segment to free the slow memory region for ULP programs. This option depends on the CONFIG_FREERTOS_UNICORE option because RTC fast memory can be accessed only by PRO_CPU core.

CONFIG_ESP32_DPORT_DIS_INTERRUPT_LVL

Disable the interrupt level for the DPORT workarounds

Found in: Component config > ESP32-specific

To prevent interrupting DPORT workarounds, need to disable interrupt with a maximum used level in the system.

Wi-Fi

Contains:

- *CONFIG_SW_COEXIST_ENABLE*
- *CONFIG_ESP32_WIFI_STATIC_RX_BUFFER_NUM*
- *CONFIG_ESP32_WIFI_DYNAMIC_RX_BUFFER_NUM*
- *CONFIG_ESP32_WIFI_TX_BUFFER*
- *CONFIG_ESP32_WIFI_STATIC_TX_BUFFER_NUM*
- *CONFIG_ESP32_WIFI_DYNAMIC_TX_BUFFER_NUM*
- *CONFIG_ESP32_WIFI_CSI_ENABLED*
- *CONFIG_ESP32_WIFI_AMPDU_TX_ENABLED*
- *CONFIG_ESP32_WIFI_AMPDU_RX_ENABLED*
- *CONFIG_ESP32_WIFI_NVS_ENABLED*
- *CONFIG_ESP32_WIFI_TASK_CORE_ID*
- *CONFIG_ESP32_WIFI_SOFTAP_BEACON_MAX_LEN*
- *CONFIG_ESP32_WIFI_MGMT_SBUF_NUM*
- *CONFIG_ESP32_WIFI_DEBUG_LOG_ENABLE*
- *CONFIG_ESP32_WIFI_IRAM_OPT*
- *CONFIG_ESP32_WIFI_RX_IRAM_OPT*

CONFIG_SW_COEXIST_ENABLE

Software controls WiFi/Bluetooth coexistence

Found in: Component config > Wi-Fi

If enabled, WiFi & Bluetooth coexistence is controlled by software rather than hardware. Recommended for heavy traffic scenarios. Both coexistence configuration options are automatically managed, no user intervention is required. If only Bluetooth is used, it is recommended to disable this option to reduce binary file size.

CONFIG_ESP32_WIFI_STATIC_RX_BUFFER_NUM

Max number of WiFi static RX buffers

Found in: Component config > Wi-Fi

Set the number of WiFi static RX buffers. Each buffer takes approximately 1.6KB of RAM. The static rx buffers are allocated when esp_wifi_init is called, they are not freed until esp_wifi_deinit is called.

WiFi hardware use these buffers to receive all 802.11 frames. A higher number may allow higher throughput but increases memory use. If ESP32_WIFI_AMPDU_RX_ENABLED is enabled, this value is recommended to set equal or bigger than ESP32_WIFI_RX_BA_WIN in order to achieve better throughput and compatibility with both stations and APs.

CONFIG_ESP32_WIFI_DYNAMIC_RX_BUFFER_NUM

Max number of WiFi dynamic RX buffers

Found in: Component config > Wi-Fi

Set the number of WiFi dynamic RX buffers, 0 means unlimited RX buffers will be allocated (provided sufficient free RAM). The size of each dynamic RX buffer depends on the size of the received data frame.

For each received data frame, the WiFi driver makes a copy to an RX buffer and then delivers it to the high layer TCP/IP stack. The dynamic RX buffer is freed after the higher layer has successfully received the data frame.

For some applications, WiFi data frames may be received faster than the application can process them. In these cases we may run out of memory if RX buffer number is unlimited (0).

If a dynamic RX buffer limit is set, it should be at least the number of static RX buffers.

CONFIG_ESP32_WIFI_TX_BUFFER

Type of WiFi TX buffers

Found in: Component config > Wi-Fi

Select type of WiFi TX buffers:

If "Static" is selected, WiFi TX buffers are allocated when WiFi is initialized and released when WiFi is de-initialized. The size of each static TX buffer is fixed to about 1.6KB.

If "Dynamic" is selected, each WiFi TX buffer is allocated as needed when a data frame is delivered to the Wifi driver from the TCP/IP stack. The buffer is freed after the data frame has

been sent by the WiFi driver. The size of each dynamic TX buffer depends on the length of each data frame sent by the TCP/IP layer.

If PSRAM is enabled, "Static" should be selected to guarantee enough WiFi TX buffers. If PSRAM is disabled, "Dynamic" should be selected to improve the utilization of RAM.

Available options:

- Static (ESP32_WIFI_STATIC_TX_BUFFER)
- Dynamic (ESP32_WIFI_DYNAMIC_TX_BUFFER)

CONFIG_ESP32_WIFI_STATIC_TX_BUFFER_NUM

Max number of WiFi static TX buffers

Found in: Component config > Wi-Fi

Set the number of WiFi static TX buffers. Each buffer takes approximately 1.6KB of RAM. The static RX buffers are allocated when esp_wifi_init() is called, they are not released until esp_wifi_deinit() is called.

For each transmitted data frame from the higher layer TCP/IP stack, the WiFi driver makes a copy of it in a TX buffer. For some applications especially UDP applications, the upper layer can deliver frames faster than WiFi layer can transmit. In these cases, we may run out of TX buffers.

CONFIG_ESP32_WIFI_DYNAMIC_TX_BUFFER_NUM

Max number of WiFi dynamic TX buffers

Found in: Component config > Wi-Fi

Set the number of WiFi dynamic TX buffers. The size of each dynamic TX buffer is not fixed, it depends on the size of each transmitted data frame.

For each transmitted frame from the higher layer TCP/IP stack, the WiFi driver makes a copy of it in a TX buffer. For some applications, especially UDP applications, the upper layer can deliver frames faster than WiFi layer can transmit. In these cases, we may run out of TX buffers.

CONFIG_ESP32_WIFI_CSI_ENABLED

WiFi CSI(Channel State Information)

Found in: Component config > Wi-Fi

Select this option to enable CSI(Channel State Information) feature. CSI takes about CONFIG_ESP32_WIFI_STATIC_RX_BUFFER_NUM KB of RAM. If CSI is not used, it is better to disable this feature in order to save memory.

CONFIG_ESP32_WIFI_AMPDU_TX_ENABLED

WiFi AMPDU TX

Found in: Component config > Wi-Fi

Select this option to enable AMPDU TX feature

CONFIG_ESP32_WIFI_TX_BA_WIN

WiFi AMPDU TX BA window size

Found in: Component config > Wi-Fi > CONFIG_ESP32_WIFI_AMPDU_TX_ENABLED

Set the size of WiFi Block Ack TX window. Generally a bigger value means higher throughput but more memory. Most of time we should NOT change the default value unless special reason, e.g. test the maximum UDP TX throughput with iperf etc. For iperf test in shieldbox, the recommended value is 9~12.

CONFIG_ESP32_WIFI_AMPDU_RX_ENABLED

WiFi AMPDU RX

Found in: Component config > Wi-Fi

Select this option to enable AMPDU RX feature

CONFIG_ESP32_WIFI_RX_BA_WIN

WiFi AMPDU RX BA window size

Found in: Component config > Wi-Fi > CONFIG_ESP32_WIFI_AMPDU_RX_ENABLED

Set the size of WiFi Block Ack RX window. Generally a bigger value means higher throughput and better compatibility but more memory. Most of time we should NOT change the default value unless special reason, e.g. test the maximum UDP RX throughput with iperf etc. For iperf test in shieldbox, the recommended value is 9~12. If PSRAM is used and WiFi memory is prefered to allocat in PSRAM first, the default and minimum value should be 16 to achieve better throughput and compatibility with both stations and APs.

CONFIG_ESP32_WIFI_NVS_ENABLED

WiFi NVS flash

Found in: Component config > Wi-Fi

Select this option to enable WiFi NVS flash

CONFIG_ESP32_WIFI_TASK_CORE_ID

WiFi Task Core ID

Found in: Component config > Wi-Fi

Pinned WiFi task to core 0 or core 1.

Available options:

- Core 0 (ESP32_WIFI_TASK_PINNED_TO_CORE_0)
- Core 1 (ESP32_WIFI_TASK_PINNED_TO_CORE_1)

CONFIG_ESP32_WIFI_SOFTAP_BEACON_MAX_LEN

Max length of WiFi SoftAP Beacon

Found in: Component config > Wi-Fi

ESP-MESH utilizes beacon frames to detect and resolve root node conflicts (see documentation). However the default length of a beacon frame can simultaneously hold only five root node identifier structures, meaning that a root node conflict of up to five nodes can be detected at one time. In the occurence of more root nodes conflict involving more than five root nodes, the conflict resolution process will detect five of the root nodes, resolve the conflict, and re-detect more root nodes. This process will repeat until all root node conflicts are resolved. However this process can generally take a very long time.

To counter this situation, the beacon frame length can be increased such that more root nodes can be detected simultaneously. Each additional root node will require 36 bytes and should be added ontop of the default beacon frame length of 752 bytes. For example, if you want to detect 10 root nodes simultaneously, you need to set the beacon frame length as 932 (752+36*5).

Setting a longer beacon length also assists with debugging as the conflicting root nodes can be identified more quickly.

CONFIG_ESP32_WIFI_MGMT_SBUF_NUM

WiFi mgmt short buffer number

Found in: Component config > Wi-Fi

Set the number of WiFi management short buffer.

CONFIG_ESP32_WIFI_DEBUG_LOG_ENABLE

Enable WiFi debug log

Found in: Component config > Wi-Fi

Select this option to enable WiFi debug log

CONFIG_ESP32_WIFI_DEBUG_LOG_LEVEL

WiFi debug log level

Found in: Component config > Wi-Fi > CONFIG_ESP32_WIFI_DEBUG_LOG_ENABLE

The WiFi log is divided into the following levels: ERROR,WARNING,INFO,DEBUG,VERBOSE. The ERROR,WARNING,INFO levels are enabled by default, and the DEBUG,VERBOSE levels can be enabled here.

Available options:

- WiFi Debug Log Debug (ESP32_WIFI_DEBUG_LOG_DEBUG)
- WiFi Debug Log Verbose (ESP32_WIFI_DEBUG_LOG_VERBOSE)

CONFIG_ESP32_WIFI_DEBUG_LOG_MODULE

WiFi debug log module

Found in: Component config > Wi-Fi > CONFIG_ESP32_WIFI_DEBUG_LOG_ENABLE

The WiFi log module contains three parts: WIFI,COEX,MESH. The WIFI module indicates the logs related to WiFi, the COEX module indicates the logs related to WiFi and BT(or BLE) coexist, the MESH module indicates the logs related to Mesh. When ESP32_WIFI_LOG_MODULE_ALL is enabled, all modules are selected.

Available options:

- WiFi Debug Log Module All (ESP32_WIFI_DEBUG_LOG_MODULE_ALL)
- WiFi Debug Log Module WiFi (ESP32_WIFI_DEBUG_LOG_MODULE_WIFI)
- WiFi Debug Log Module Coex (ESP32_WIFI_DEBUG_LOG_MODULE_COEX)
- WiFi Debug Log Module Mesh (ESP32_WIFI_DEBUG_LOG_MODULE_MESH)

CONFIG_ESP32_WIFI_DEBUG_LOG_SUBMODULE

WiFi debug log submodule

Found in: Component config > Wi-Fi > CONFIG_ESP32_WIFI_DEBUG_LOG_ENABLE

Enable this option to set the WiFi debug log submodule. Currently the log submodule contains the following parts: INIT,IOCTL,CONN,SCAN. The INIT submodule indicates the initialization process.The IOCTL submodule indicates the API calling process. The CONN submodule indicates the connecting process.The SCAN submodule indicates the scaning process.

CONFIG_ESP32_WIFI_DEBUG_LOG_SUBMODULE_ALL

WiFi Debug Log Submodule All

Found in: Component config > Wi-Fi > CONFIG_ESP32_WIFI_DEBUG_LOG_ENABLE > CONFIG_ESP32_WIFI_DEBUG_LOG_SUBMODULE

When this option is enabled, all debug submodules are selected.

CONFIG_ESP32_WIFI_DEBUG_LOG_SUBMODULE_INIT

WiFi Debug Log Submodule Init

Found in: Component config > Wi-Fi > CONFIG_ESP32_WIFI_DEBUG_LOG_ENABLE > CONFIG_ESP32_WIFI_DEBUG_LOG_SUBMODULE

CONFIG_ESP32_WIFI_DEBUG_LOG_SUBMODULE_IOCTL

WiFi Debug Log Submodule Ioctl

Found in: Component config > Wi-Fi > CONFIG_ESP32_WIFI_DEBUG_LOG_ENABLE > CONFIG_ESP32_WIFI_DEBUG_LOG_SUBMODULE

CONFIG_ESP32_WIFI_DEBUG_LOG_SUBMODULE_CONN

WiFi Debug Log Submodule Conn

Found in: Component config > Wi-Fi > CONFIG_ESP32_WIFI_DEBUG_LOG_ENABLE > CONFIG_ESP32_WIFI_DEBUG_LOG_SUBMODULE

CONFIG_ESP32_WIFI_DEBUG_LOG_SUBMODULE_SCAN

WiFi Debug Log Submodule Scan

Found in: Component config > Wi-Fi > CONFIG_ESP32_WIFI_DEBUG_LOG_ENABLE > CONFIG_ESP32_WIFI_DEBUG_LOG_SUBMODULE

CONFIG_ESP32_WIFI_IRAM_OPT

WiFi IRAM speed optimization

Found in: Component config > Wi-Fi

Select this option to place frequently called Wi-Fi library functions in IRAM. When this option is disabled, more than 10Kbytes of IRAM memory will be saved but Wi-Fi throughput will be reduced.

CONFIG_ESP32_WIFI_RX_IRAM_OPT

WiFi RX IRAM speed optimization

Found in: Component config > Wi-Fi

Select this option to place frequently called Wi-Fi library RX functions in IRAM. When this option is disabled, more than 17Kbytes of IRAM memory will be saved but Wi-Fi performance will be reduced.

PHY

Contains:

- *CONFIG_ESP32_PHY_CALIBRATION_AND_DATA_STORAGE*
- *CONFIG_ESP32_PHY_INIT_DATA_IN_PARTITION*
- *CONFIG_ESP32_PHY_MAX_WIFI_TX_POWER*

CONFIG_ESP32_PHY_CALIBRATION_AND_DATA_STORAGE

Store phy calibration data in NVS

Found in: Component config > PHY

If this option is enabled, NVS will be initialized and calibration data will be loaded from there. PHY calibration will be skipped on deep sleep wakeup. If calibration data is not found, full calibration will be performed and stored in NVS. Normally, only partial calibration will be performed. If this option is disabled, full calibration will be performed.

If it’s easy that your board calibrate bad data, choose ‘n’. Two cases for example, you should choose ‘n’: 1.If your board is easy to be booted up with antenna disconnected. 2.Because of

your board design, each time when you do calibration, the result are too unstable. If unsure, choose ‘y’.

CONFIG_ESP32_PHY_INIT_DATA_IN_PARTITION

Use a partition to store PHY init data

Found in: Component config > PHY

If enabled, PHY init data will be loaded from a partition. When using a custom partition table, make sure that PHY data partition is included (type: ‘data’, subtype: ‘phy’). With default partition tables, this is done automatically. If PHY init data is stored in a partition, it has to be flashed there, otherwise runtime error will occur.

If this option is not enabled, PHY init data will be embedded into the application binary.

If unsure, choose ‘n’.

CONFIG_ESP32_PHY_MAX_WIFI_TX_POWER

Max WiFi TX power (dBm)

Found in: Component config > PHY

Set maximum transmit power for WiFi radio. Actual transmit power for high data rates may be lower than this setting.

Power Management

Contains:

- *CONFIG_PM_ENABLE*

CONFIG_PM_ENABLE

Support for power management

Found in: Component config > Power Management

If enabled, application is compiled with support for power management. This option has runtime overhead (increased interrupt latency, longer time to enter idle state), and it also reduces accuracy of RTOS ticks and timers used for timekeeping. Enable this option if application uses power management APIs.

CONFIG_PM_DFS_INIT_AUTO

Enable dynamic frequency scaling (DFS) at startup

Found in: Component config > Power Management > CONFIG_PM_ENABLE

If enabled, startup code configures dynamic frequency scaling. Max CPU frequency is set to CONFIG_ESP32_DEFAULT_CPU_FREQ_MHZ setting, min frequency is set to XTAL frequency. If disabled, DFS will not be active until the application configures it using esp_pm_configure function.

CONFIG_PM_USE_RTC_TIMER_REF

Use RTC timer to prevent time drift (EXPERIMENTAL)

Found in: Component config > Power Management > CONFIG_PM_ENABLE

When APB clock frequency changes, high-resolution timer (esp_timer) scale and base value need to be adjusted. Each adjustment may cause small error, and over time such small errors may cause time drift. If this option is enabled, RTC timer will be used as a reference to compensate for the drift. It is recommended that this option is only used if 32k XTAL is selected as RTC clock source.

CONFIG_PM_PROFILING

Enable profiling counters for PM locks

Found in: Component config > Power Management > CONFIG_PM_ENABLE

If enabled, esp_pm_* functions will keep track of the amount of time each of the power management locks has been held, and esp_pm_dump_locks function will print this information. This feature can be used to analyze which locks are preventing the chip from going into a lower power state, and see what time the chip spends in each power saving mode. This feature does incur some run-time overhead, so should typically be disabled in production builds.

CONFIG_PM_TRACE

Enable debug tracing of PM using GPIOs

Found in: Component config > Power Management > CONFIG_PM_ENABLE

If enabled, some GPIOs will be used to signal events such as RTOS ticks, frequency switching, entry/exit from idle state. Refer to pm_trace.c file for the list of GPIOs. This feature is intended to be used when analyzing/debugging behavior of power management implementation, and should be kept disabled in applications.

ADC-Calibration

Contains:

- *CONFIG_ADC_CAL_EFUSE_TP_ENABLE*
- *CONFIG_ADC_CAL_EFUSE_VREF_ENABLE*
- *CONFIG_ADC_CAL_LUT_ENABLE*

CONFIG_ADC_CAL_EFUSE_TP_ENABLE

Use Two Point Values

Found in: Component config > ADC-Calibration

Some ESP32s have Two Point calibration values burned into eFuse BLOCK3. This option will allow the ADC calibration component to characterize the ADC-Voltage curve using Two Point values if they are available.

CONFIG_ADC_CAL_EFUSE_VREF_ENABLE

Use eFuse Vref

Found in: Component config > ADC-Calibration

Some ESP32s have Vref burned into eFuse BLOCK0. This option will allow the ADC calibration component to characterize the ADC-Voltage curve using eFuse Vref if it is available.

CONFIG_ADC_CAL_LUT_ENABLE

Use Lookup Tables

Found in: Component config > ADC-Calibration

This option will allow the ADC calibration component to use Lookup Tables to correct for non-linear behavior in 11db attenuation. Other attenuations do not exhibit non-linear behavior hence will not be affected by this option.

Event Loop Library

Contains:

- *CONFIG_EVENT_LOOP_PROFILING*

CONFIG_EVENT_LOOP_PROFILING

Enable event loop profiling

Found in: Component config > Event Loop Library

Enables collections of statistics in the event loop library such as the number of events posted to/recieved by an event loop, number of callbacks involved, number of events dropped to to a full event loop queue, run time of event handlers, and number of times/run time of each event handler.

ESP HTTP client

Contains:

- *CONFIG_ESP_HTTP_CLIENT_ENABLE_HTTPS*
- *CONFIG_ESP_HTTP_CLIENT_ENABLE_BASIC_AUTH*

CONFIG_ESP_HTTP_CLIENT_ENABLE_HTTPS

Enable https

Found in: Component config > ESP HTTP client

This option will enable https protocol by linking mbedtls library and initializing SSL transport

CONFIG_ESP_HTTP_CLIENT_ENABLE_BASIC_AUTH

Enable HTTP Basic Authentication

Found in: Component config > ESP HTTP client

This option will enable HTTP Basic Authentication. It is disabled by default as Basic auth uses unencrypted encoding, so it introduces a vulnerability when not using TLS

HTTP Server

Contains:

- *CONFIG_HTTPD_MAX_REQ_HDR_LEN*
- *CONFIG_HTTPD_MAX_URI_LEN*
- *CONFIG_HTTPD_ERR_RESP_NO_DELAY*
- *CONFIG_HTTPD_PURGE_BUF_LEN*

- *CONFIG_HTTPD_LOG_PURGE_DATA*

CONFIG_HTTPD_MAX_REQ_HDR_LEN

Max HTTP Request Header Length

Found in: Component config > HTTP Server

This sets the maximum supported size of headers section in HTTP request packet to be processed by the server

CONFIG_HTTPD_MAX_URI_LEN

Max HTTP URI Length

Found in: Component config > HTTP Server

This sets the maximum supported size of HTTP request URI to be processed by the server

CONFIG_HTTPD_ERR_RESP_NO_DELAY

Use TCP_NODELAY socket option when sending HTTP error responses

Found in: Component config > HTTP Server

Using TCP_NODEALY socket option ensures that HTTP error response reaches the client before the underlying socket is closed. Please note that turning this off may cause multiple test failures

CONFIG_HTTPD_PURGE_BUF_LEN

Length of temporary buffer for purging data

Found in: Component config > HTTP Server

This sets the size of the temporary buffer used to receive and discard any remaining data that is received from the HTTP client in the request, but not processed as part of the server HTTP request handler.

If the remaining data is larger than the available buffer size, the buffer will be filled in multiple iterations. The buffer should be small enough to fit on the stack, but large enough to avoid excessive iterations.

CONFIG_HTTPD_LOG_PURGE_DATA

Log purged content data at Debug level

Found in: Component config > HTTP Server

Enabling this will log discarded binary HTTP request data at Debug level. For large content data this may not be desirable as it will clutter the log.

ESP HTTPS OTA

Contains:

- *CONFIG_OTA_ALLOW_HTTP*

CONFIG_OTA_ALLOW_HTTP

Allow HTTP for OTA (WARNING: ONLY FOR TESTING PURPOSE, READ HELP)

Found in: Component config > ESP HTTPS OTA

It is highly recommended to keep HTTPS (along with server certificate validation) enabled. Enabling this option comes with potential risk of: - Non-encrypted communication channel with server - Accepting firmware upgrade image from server with fake identity

Core dump

Contains:

- *CONFIG_ESP32_COREDUMP_TO_FLASH_OR_UART*
- *CONFIG_ESP32_CORE_DUMP_MAX_TASKS_NUM*
- *CONFIG_ESP32_CORE_DUMP_UART_DELAY*

CONFIG_ESP32_COREDUMP_TO_FLASH_OR_UART

Data destination

Found in: Component config > Core dump

Select place to store core dump: flash, uart or none (to disable core dumps generation).

If core dump is configured to be stored in flash and custom partition table is used add corresponding entry to your CSV. For examples, please see predefined partition table CSV descriptions in the components/partition_table directory.

Available options:

- Flash (ESP32_ENABLE_COREDUMP_TO_FLASH)
- UART (ESP32_ENABLE_COREDUMP_TO_UART)

- None (ESP32_ENABLE_COREDUMP_TO_NONE)

CONFIG_ESP32_CORE_DUMP_MAX_TASKS_NUM

Maximum number of tasks

Found in: Component config > Core dump

Maximum number of tasks snapshots in core dump.

CONFIG_ESP32_CORE_DUMP_UART_DELAY

Delay before print to UART

Found in: Component config > Core dump

Config delay (in ms) before printing core dump to UART. Delay can be interrupted by pressing Enter key.

Ethernet

Contains:

- *CONFIG_DMA_RX_BUF_NUM*
- *CONFIG_DMA_TX_BUF_NUM*
- *CONFIG_EMAC_L2_TO_L3_RX_BUF_MODE*
- *CONFIG_EMAC_CHECK_LINK_PERIOD_MS*
- *CONFIG_EMAC_TASK_PRIORITY*
- *CONFIG_EMAC_TASK_STACK_SIZE*

CONFIG_DMA_RX_BUF_NUM

Number of DMA RX buffers

Found in: Component config > Ethernet

Number of DMA receive buffers. Each buffer is 1600 bytes. These buffers are allocated dynamically. More buffers will increase throughput. If flow ctrl is enabled, make sure this number is larger than 9.

CONFIG_DMA_TX_BUF_NUM

Number of DMA TX buffers

Found in: Component config > Ethernet

Number of DMA transmit buffers. Each buffer is 1600 bytes. These buffers are allocated dynamically. More buffers will increase throughput.

CONFIG_EMAC_L2_TO_L3_RX_BUF_MODE

Enable received buffers be copied to Layer3 from Layer2

Found in: Component config > Ethernet

If this option is selected, a copy of each received buffer will be allocated from the heap before passing it to the IP Layer (L3). Which means, the total amount of received buffers is limited by the heap size.

If this option is not selected, IP layer only uses the pointers to the DMA buffers owned by Ethernet MAC. When Ethernet MAC doesn' t have any available buffers left, it will drop the incoming packets.

CONFIG_EMAC_CHECK_LINK_PERIOD_MS

Period (ms) of checking Ethernet linkup status

Found in: Component config > Ethernet

The emac driver uses an internal timer to check the Ethernet linkup status. Here you should choose a valid interval time.

CONFIG_EMAC_TASK_PRIORITY

EMAC_TASK_PRIORITY

Found in: Component config > Ethernet

Priority of Ethernet MAC task.

CONFIG_EMAC_TASK_STACK_SIZE

Stack Size of EMAC Task

Found in: Component config > Ethernet

Stack Size of Ethernet MAC task.

FAT Filesystem support

Contains:

- *CONFIG_FATFS_CHOOSE_CODEPAGE*
- *CONFIG_FATFS_LONG_FILENAMES*
- *CONFIG_FATFS_MAX_LFN*
- *CONFIG_FATFS_API_ENCODING*
- *CONFIG_FATFS_FS_LOCK*
- *CONFIG_FATFS_TIMEOUT_MS*
- *CONFIG_FATFS_PER_FILE_CACHE*
- *CONFIG_FATFS_ALLOC_PREFER_EXTRAM*

CONFIG_FATFS_CHOOSE_CODEPAGE

OEM Code Page

Found in: Component config > FAT Filesystem support

OEM code page used for file name encodings.

If "Dynamic" is selected, code page can be chosen at runtime using f_setcp function. Note that choosing this option will increase application size by ~480kB.

Available options:

- Dynamic (all code pages supported) (FATFS_CODEPAGE_DYNAMIC)
- US (CP437) (FATFS_CODEPAGE_437)
- Arabic (CP720) (FATFS_CODEPAGE_720)
- Greek (CP737) (FATFS_CODEPAGE_737)
- KBL (CP771) (FATFS_CODEPAGE_771)
- Baltic (CP775) (FATFS_CODEPAGE_775)
- Latin 1 (CP850) (FATFS_CODEPAGE_850)
- Latin 2 (CP852) (FATFS_CODEPAGE_852)
- Cyrillic (CP855) (FATFS_CODEPAGE_855)
- Turkish (CP857) (FATFS_CODEPAGE_857)
- Portugese (CP860) (FATFS_CODEPAGE_860)
- Icelandic (CP861) (FATFS_CODEPAGE_861)

- Hebrew (CP862) (FATFS_CODEPAGE_862)
- Canadian French (CP863) (FATFS_CODEPAGE_863)
- Arabic (CP864) (FATFS_CODEPAGE_864)
- Nordic (CP865) (FATFS_CODEPAGE_865)
- Russian (CP866) (FATFS_CODEPAGE_866)
- Greek 2 (CP869) (FATFS_CODEPAGE_869)
- Japanese (DBCS) (CP932) (FATFS_CODEPAGE_932)
- Simplified Chinese (DBCS) (CP936) (FATFS_CODEPAGE_936)
- Korean (DBCS) (CP949) (FATFS_CODEPAGE_949)
- Traditional Chinese (DBCS) (CP950) (FATFS_CODEPAGE_950)

CONFIG_FATFS_LONG_FILENAMES

Long filename support

Found in: Component config > FAT Filesystem support

Support long filenames in FAT. Long filename data increases memory usage. FATFS can be configured to store the buffer for long filename data in stack or heap.

Available options:

- No long filenames (FATFS_LFN_NONE)
- Long filename buffer in heap (FATFS_LFN_HEAP)
- Long filename buffer on stack (FATFS_LFN_STACK)

CONFIG_FATFS_MAX_LFN

Max long filename length

Found in: Component config > FAT Filesystem support

Maximum long filename length. Can be reduced to save RAM.

CONFIG_FATFS_API_ENCODING

API character encoding

Found in: Component config > FAT Filesystem support

Choose encoding for character and string arguments/returns when using FATFS APIs. The encoding of arguments will usually depend on text editor settings.

Available options:

- API uses ANSI/OEM encoding (FATFS_API_ENCODING_ANSI_OEM)
- API uses UTF-16 encoding (FATFS_API_ENCODING_UTF_16)
- API uses UTF-8 encoding (FATFS_API_ENCODING_UTF_8)

CONFIG_FATFS_FS_LOCK

Number of simultaneously open files protected by lock function

Found in: Component config > FAT Filesystem support

This option sets the FATFS configuration value _FS_LOCK. The option _FS_LOCK switches file lock function to control duplicated file open and illegal operation to open objects.

* 0: Disable file lock function. To avoid volume corruption, application should avoid illegal open, remove and rename to the open objects.

* >0: Enable file lock function. The value defines how many files/sub-directories can be opened simultaneously under file lock control.

Note that the file lock control is independent of re-entrancy.

CONFIG_FATFS_TIMEOUT_MS

Timeout for acquiring a file lock, ms

Found in: Component config > FAT Filesystem support

This option sets FATFS configuration value _FS_TIMEOUT, scaled to milliseconds. Sets the number of milliseconds FATFS will wait to acquire a mutex when operating on an open file. For example, if one task is performing a lenghty operation, another task will wait for the first task to release the lock, and time out after amount of time set by this option.

CONFIG_FATFS_PER_FILE_CACHE

Use separate cache for each file

Found in: Component config > FAT Filesystem support

This option affects FATFS configuration value _FS_TINY.

If this option is set, _FS_TINY is 0, and each open file has its own cache, size of the cache is equal to the _MAX_SS variable (512 or 4096 bytes). This option uses more RAM if more than 1 file is open, but needs less reads and writes to the storage for some operations.

If this option is not set, _FS_TINY is 1, and single cache is used for all open files, size is also equal to _MAX_SS variable. This reduces the amount of heap used when multiple files are open, but increases the number of read and write operations which FATFS needs to make.

CONFIG_FATFS_ALLOC_PREFER_EXTRAM

Perfer external RAM when allocating FATFS buffers

Found in: Component config > FAT Filesystem support

When the option is enabled, internal buffers used by FATFS will be allocated from external RAM. If the allocation from external RAM fails, the buffer will be allocated from the internal RAM. Disable this option if optimizing for performance. Enable this option if optimizing for internal memory size.

Modbus configuration

Contains:

- *CONFIG_MB_QUEUE_LENGTH*
- *CONFIG_MB_SERIAL_TASK_STACK_SIZE*
- *CONFIG_MB_SERIAL_BUF_SIZE*
- *CONFIG_MB_SERIAL_TASK_PRIO*
- *CONFIG_MB_CONTROLLER_SLAVE_ID_SUPPORT*
- *CONFIG_MB_CONTROLLER_NOTIFY_TIMEOUT*
- *CONFIG_MB_CONTROLLER_NOTIFY_QUEUE_SIZE*
- *CONFIG_MB_CONTROLLER_STACK_SIZE*
- *CONFIG_MB_EVENT_QUEUE_TIMEOUT*
- *CONFIG_MB_TIMER_PORT_ENABLED*

CONFIG_MB_QUEUE_LENGTH

Modbus serial task queue length

Found in: Component config > Modbus configuration

Modbus serial driver queue length. It is used by event queue task. See the serial driver API for more information.

CONFIG_MB_SERIAL_TASK_STACK_SIZE

Modbus serial task stack size

Found in: Component config > Modbus configuration

Modbus serial task stack size for event queue task. It may be adjusted when debugging is enabled (for example).

CONFIG_MB_SERIAL_BUF_SIZE

Modbus serial task RX/TX buffer size

Found in: Component config > Modbus configuration

Modbus serial task RX and TX buffer size for UART driver initialization. This buffer is used for Modbus frame transfer. The Modbus protocol maximum frame size is 256 bytes. Bigger size can be used for non standard implementations.

CONFIG_MB_SERIAL_TASK_PRIO

Modbus serial task priority

Found in: Component config > Modbus configuration

Modbus UART driver event task priority. The priority of Modbus controller task is equal to (CONFIG_MB_SERIAL_TASK_PRIO - 1).

CONFIG_MB_CONTROLLER_SLAVE_ID_SUPPORT

Modbus controller slave ID support

Found in: Component config > Modbus configuration

Modbus slave ID support enable. When enabled the Modbus <Report Slave ID> command is supported by stack.

CONFIG_MB_CONTROLLER_SLAVE_ID

Modbus controller slave ID

Found in: Component config > Modbus configuration > CONFIG_MB_CONTROLLER_SLAVE_ID_SUPPORT

Modbus slave ID value to identify modbus device in the network using <Report Slave ID> command. Most significant byte of ID is used as short device ID and other three bytes used as long ID.

CONFIG_MB_CONTROLLER_NOTIFY_TIMEOUT

Modbus controller notification timeout (ms)

Found in: Component config > Modbus configuration

Modbus controller notification timeout in milliseconds. This timeout is used to send notification about accessed parameters.

CONFIG_MB_CONTROLLER_NOTIFY_QUEUE_SIZE

Modbus controller notification queue size

Found in: Component config > Modbus configuration

Modbus controller notification queue size. The notification queue is used to get information about accessed parameters.

CONFIG_MB_CONTROLLER_STACK_SIZE

Modbus controller stack size

Found in: Component config > Modbus configuration

Modbus controller task stack size. The Stack size may be adjusted when debug mode is used which requires more stack size (for example).

CONFIG_MB_EVENT_QUEUE_TIMEOUT

Modbus stack event queue timeout (ms)

Found in: Component config > Modbus configuration

Modbus stack event queue timeout in milliseconds. This may help to optimize Modbus stack event processing time.

CONFIG_MB_TIMER_PORT_ENABLED

Modbus stack use timer for 3.5T symbol time measurement

Found in: Component config > Modbus configuration

If this option is set the Modbus stack uses timer for T3.5 time measurement. Else the internal UART TOUT timeout is used for 3.5T symbol time measurement.

CONFIG_MB_TIMER_GROUP

Modbus Timer group number

Found in: Component config > Modbus configuration > CONFIG_MB_TIMER_PORT_ENABLED

Modbus Timer group number that is used for timeout measurement.

CONFIG_MB_TIMER_INDEX

Modbus Timer index in the group

Found in: Component config > Modbus configuration > CONFIG_MB_TIMER_PORT_ENABLED

Modbus Timer Index in the group that is used for timeout measurement.

FreeRTOS

Contains:

- *CONFIG_FREERTOS_UNICORE*
- *CONFIG_FREERTOS_CORETIMER*
- *CONFIG_FREERTOS_HZ*
- *CONFIG_FREERTOS_ASSERT_ON_UNTESTED_FUNCTION*
- *CONFIG_FREERTOS_CHECK_STACKOVERFLOW*
- *CONFIG_FREERTOS_WATCHPOINT_END_OF_STACK*
- *CONFIG_FREERTOS_INTERRUPT_BACKTRACE*
- *CONFIG_FREERTOS_THREAD_LOCAL_STORAGE_POINTERS*
- *CONFIG_FREERTOS_ASSERT*
- *CONFIG_FREERTOS_IDLE_TASK_STACKSIZE*
- *CONFIG_FREERTOS_ISR_STACKSIZE*
- *CONFIG_FREERTOS_LEGACY_HOOKS*
- *CONFIG_FREERTOS_MAX_TASK_NAME_LEN*
- *CONFIG_SUPPORT_STATIC_ALLOCATION*

- *CONFIG_TIMER_TASK_PRIORITY*
- *CONFIG_TIMER_TASK_STACK_DEPTH*
- *CONFIG_TIMER_QUEUE_LENGTH*
- *CONFIG_FREERTOS_QUEUE_REGISTRY_SIZE*
- *CONFIG_FREERTOS_USE_TRACE_FACILITY*
- *CONFIG_FREERTOS_GENERATE_RUN_TIME_STATS*
- *CONFIG_FREERTOS_USE_TICKLESS_IDLE*
- *CONFIG_FREERTOS_DEBUG_INTERNALS*
- *CONFIG_FREERTOS_TASK_FUNCTION_WRAPPER*
- *CONFIG_FREERTOS_CHECK_MUTEX_GIVEN_BY_OWNER*
- *CONFIG_FREERTOS_CHECK_PORT_CRITICAL_COMPLIANCE*

CONFIG_FREERTOS_UNICORE

Run FreeRTOS only on first core

Found in: Component config > FreeRTOS

This version of FreeRTOS normally takes control of all cores of the CPU. Select this if you only want to start it on the first core. This is needed when e.g. another process needs complete control over the second core.

This invisible config value sets the value of tskNO_AFFINITY in task.h. # Intended to be used as a constant from other Kconfig files. # Value is (32-bit) INT_MAX.

CONFIG_FREERTOS_CORETIMER

Xtensa timer to use as the FreeRTOS tick source

Found in: Component config > FreeRTOS

FreeRTOS needs a timer with an associated interrupt to use as the main tick source to increase counters, run timers and do pre-emptive multitasking with. There are multiple timers available to do this, with different interrupt priorities. Check

Available options:

- Timer 0 (int 6, level 1) (FREERTOS_CORETIMER_0)

  Select this to use timer 0

- Timer 1 (int 15, level 3) (FREERTOS_CORETIMER_1)

  Select this to use timer 1

CONFIG_FREERTOS_HZ

Tick rate (Hz)

Found in: Component config > FreeRTOS

Select the tick rate at which FreeRTOS does pre-emptive context switching.

CONFIG_FREERTOS_ASSERT_ON_UNTESTED_FUNCTION

Halt when an SMP-untested function is called

Found in: Component config > FreeRTOS

Some functions in FreeRTOS have not been thoroughly tested yet when moving to the SMP implementation of FreeRTOS. When this option is enabled, these fuctions will throw an assert().

CONFIG_FREERTOS_CHECK_STACKOVERFLOW

Check for stack overflow

Found in: Component config > FreeRTOS

FreeRTOS can check for stack overflows in threads and trigger an user function called vApplicationStackOverflowHook when this happens.

Available options:

- No checking (FREERTOS_CHECK_STACKOVERFLOW_NONE)

  Do not check for stack overflows (configCHECK_FOR_STACK_OVERFLOW=0)

- Check by stack pointer value (FREERTOS_CHECK_STACKOVERFLOW_PTRVAL)

  Check for stack overflows on each context switch by checking if the stack pointer is in a valid range. Quick but does not detect stack overflows that happened between context switches (configCHECK_FOR_STACK_OVERFLOW=1)

- Check using canary bytes (FREERTOS_CHECK_STACKOVERFLOW_CANARY)

  Places some magic bytes at the end of the stack area and on each context switch, check if these bytes are still intact. More thorough than just checking the pointer, but also slightly slower. (configCHECK_FOR_STACK_OVERFLOW=2)

CONFIG_FREERTOS_WATCHPOINT_END_OF_STACK

Set a debug watchpoint as a stack overflow check

Found in: Component config > FreeRTOS

FreeRTOS can check if a stack has overflown its bounds by checking either the value of the stack pointer or by checking the integrity of canary bytes. (See FREERTOS_CHECK_STACKOVERFLOW for more information.) These checks only happen on a context switch, and the situation that caused the stack overflow may already be long gone by then. This option will use the debug memory watchpoint 1 (the second one) to allow breaking into the debugger (or panic'ing) as soon as any of the last 32 bytes on the stack of a task are overwritten. The side effect is that using gdb, you effectively only have one watchpoint; the 2nd one is overwritten as soon as a task switch happens.

This check only triggers if the stack overflow writes within 4 bytes of the end of the stack, rather than overshooting further, so it is worth combining this approach with one of the other stack overflow check methods.

When this watchpoint is hit, gdb will stop with a SIGTRAP message. When no JTAG OCD is attached, esp-idf will panic on an unhandled debug exception.

CONFIG_FREERTOS_INTERRUPT_BACKTRACE

Enable backtrace from interrupt to task context

Found in: Component config > FreeRTOS

If this option is enabled, interrupt stack frame will be modified to point to the code of the interrupted task as its return address. This helps the debugger (or the panic handler) show a backtrace from the interrupt to the task which was interrupted. This also works for nested interrupts: higer level interrupt stack can be traced back to the lower level interrupt. This option adds 4 instructions to the interrupt dispatching code.

CONFIG_FREERTOS_THREAD_LOCAL_STORAGE_POINTERS

Number of thread local storage pointers

Found in: Component config > FreeRTOS

FreeRTOS has the ability to store per-thread pointers in the task control block. This controls the number of pointers available.

This value must be at least 1. Index 0 is reserved for use by the pthreads API thread-local-storage. Other indexes can be used for any desired purpose.

CONFIG_FREERTOS_ASSERT

FreeRTOS assertions

Found in: Component config > FreeRTOS

Failed FreeRTOS configASSERT() assertions can be configured to behave in different ways.

Available options:

- abort() on failed assertions (FREERTOS_ASSERT_FAIL_ABORT)

  If a FreeRTOS configASSERT() fails, FreeRTOS will abort() and halt execution. The panic handler can be configured to handle the outcome of an abort() in different ways.

- Print and continue failed assertions (FREERTOS_ASSERT_FAIL_PRINT_CONTINUE)

  If a FreeRTOS assertion fails, print it out and continue.

- Disable FreeRTOS assertions (FREERTOS_ASSERT_DISABLE)

  FreeRTOS configASSERT() will not be compiled into the binary.

CONFIG_FREERTOS_IDLE_TASK_STACKSIZE

Idle Task stack size

Found in: Component config > FreeRTOS

The idle task has its own stack, sized in bytes. The default size is enough for most uses. Size can be reduced to 768 bytes if no (or simple) FreeRTOS idle hooks are used and pthread local storage or FreeRTOS local storage cleanup callbacks are not used.

The stack size may need to be increased above the default if the app installs idle or thread local storage cleanup hooks that use a lot of stack memory.

CONFIG_FREERTOS_ISR_STACKSIZE

ISR stack size

Found in: Component config > FreeRTOS

The interrupt handlers have their own stack. The size of the stack can be defined here. Each processor has its own stack, so the total size occupied will be twice this.

CONFIG_FREERTOS_LEGACY_HOOKS

Use FreeRTOS legacy hooks

Found in: Component config > FreeRTOS

FreeRTOS offers a number of hooks/callback functions that are called when a timer tick happens, the idle thread runs etc. esp-idf replaces these by runtime registerable hooks using the esp_register_freertos_xxx_hook system, but for legacy reasons the old hooks can also still be enabled. Please enable this only if you have code that for some reason can't be migrated to the esp_register_freertos_xxx_hook system.

CONFIG_FREERTOS_MAX_TASK_NAME_LEN

Maximum task name length

Found in: Component config > FreeRTOS

Changes the maximum task name length. Each task allocated will include this many bytes for a task name. Using a shorter value saves a small amount of RAM, a longer value allows more complex names.

For most uses, the default of 16 is OK.

CONFIG_SUPPORT_STATIC_ALLOCATION

Enable FreeRTOS static allocation API

Found in: Component config > FreeRTOS

FreeRTOS gives the application writer the ability to instead provide the memory themselves, allowing the following objects to optionally be created without any memory being allocated dynamically:

- Tasks
- Software Timers (Daemon task is still dynamic. See documentation)
- Queues
- Event Groups
- Binary Semaphores
- Counting Semaphores
- Recursive Semaphores
- Mutexes

Whether it is preferable to use static or dynamic memory allocation is dependent on the application, and the preference of the application writer. Both methods have pros and cons, and both methods can be used within the same RTOS application.

Creating RTOS objects using statically allocated RAM has the benefit of providing the application writer with more control: RTOS objects can be placed at specific memory locations. The

maximum RAM footprint can be determined at link time, rather than run time. The application writer does not need to concern themselves with graceful handling of memory allocation failures. It allows the RTOS to be used in applications that simply don' t allow any dynamic memory allocation (although FreeRTOS includes allocation schemes that can overcome most objections).

CONFIG_ENABLE_STATIC_TASK_CLEAN_UP_HOOK

Enable static task clean up hook

Found in: Component config > FreeRTOS > CONFIG_SUPPORT_STATIC_ALLOCATION

Enable this option to make FreeRTOS call the static task clean up hook when a task is deleted.

Bear in mind that if this option is enabled you will need to implement the following function:

```
void vPortCleanUpTCB ( void \*pxTCB ) {
    // place clean up code here
}
```

CONFIG_TIMER_TASK_PRIORITY

FreeRTOS timer task priority

Found in: Component config > FreeRTOS

The timer service task (primarily) makes use of existing FreeRTOS features, allowing timer functionality to be added to an application with minimal impact on the size of the application' s executable binary.

Use this constant to define the priority that the timer task will run at.

CONFIG_TIMER_TASK_STACK_DEPTH

FreeRTOS timer task stack size

Found in: Component config > FreeRTOS

The timer service task (primarily) makes use of existing FreeRTOS features, allowing timer functionality to be added to an application with minimal impact on the size of the application' s executable binary.

Use this constant to define the size (in bytes) of the stack allocated for the timer task.

CONFIG_TIMER_QUEUE_LENGTH

FreeRTOS timer queue length

Found in: Component config > FreeRTOS

FreeRTOS provides a set of timer related API functions. Many of these functions use a standard FreeRTOS queue to send commands to the timer service task. The queue used for this purpose is called the ‘timer command queue’. The ‘timer command queue’ is private to the FreeRTOS timer implementation, and cannot be accessed directly.

For most uses the default value of 10 is OK.

CONFIG_FREERTOS_QUEUE_REGISTRY_SIZE

FreeRTOS queue registry size

Found in: Component config > FreeRTOS

FreeRTOS uses the queue registry as a means for kernel aware debuggers to locate queues, semaphores, and mutexes. The registry allows for a textual name to be associated with a queue for easy identification within a debugging GUI. A value of 0 will disable queue registry functionality, and a value larger than 0 will specify the number of queues/semaphores/mutexes that the registry can hold.

CONFIG_FREERTOS_USE_TRACE_FACILITY

Enable FreeRTOS trace facility

Found in: Component config > FreeRTOS

If enabled, configUSE_TRACE_FACILITY will be defined as 1 in FreeRTOS. This will allow the usage of trace facility functions such as uxTaskGetSystemState().

CONFIG_FREERTOS_USE_STATS_FORMATTING_FUNCTIONS

Enable FreeRTOS stats formatting functions

Found in: Component config > FreeRTOS > CONFIG_FREERTOS_USE_TRACE_FACILITY

If enabled, configUSE_STATS_FORMATTING_FUNCTIONS will be defined as 1 in FreeRTOS. This will allow the usage of stats formatting functions such as vTaskList().

CONFIG_FREERTOS_VTASKLIST_INCLUDE_COREID

Enable display of xCoreID in vTaskList

Found in: Component config > FreeRTOS > CONFIG_FREERTOS_USE_TRACE_FACILITY > CONFIG_FREERTOS_USE_STATS_FORMATTING_FUNCTIONS

If enabled, this will include an extra column when vTaskList is called to display the CoreID the task is pinned to (0,1) or -1 if not pinned.

CONFIG_FREERTOS_GENERATE_RUN_TIME_STATS

Enable FreeRTOS to collect run time stats

Found in: Component config > FreeRTOS

If enabled, configGENERATE_RUN_TIME_STATS will be defined as 1 in FreeRTOS. This will allow FreeRTOS to collect information regarding the usage of processor time amongst FreeRTOS tasks. Run time stats are generated using either the ESP Timer or the CPU Clock as the clock source (Note that run time stats are only valid until the clock source overflows). The function vTaskGetRunTimeStats() will also be available if FREERTOS_USE_STATS_FORMATTING_FUNCTIONS and FREERTOS_USE_TRACE_FACILITY are enabled. vTaskGetRunTimeStats() will display the run time of each task as a % of the total run time of all CPUs (task run time / no of CPUs) / (total run time / 100)

CONFIG_FREERTOS_RUN_TIME_STATS_CLK

Choose the clock source for run time stats

Found in: Component config > FreeRTOS > CONFIG_FREERTOS_GENERATE_RUN_TIME_STATS

Choose the clock source for FreeRTOS run time stats. Options are CPU0' s CPU Clock or the ESP Timer. Both clock sources are 32 bits. The CPU Clock can run at a higher frequency hence provide a finer resolution but will overflow much quicker. Note that run time stats are only valid until the clock source overflows.

Available options:

- Use ESP TIMER for run time stats (FREERTOS_RUN_TIME_STATS_USING_ESP_TIMER)

  ESP Timer will be used as the clock source for FreeRTOS run time stats. The ESP Timer runs at a frequency of 1MHz regardless of Dynamic Frequency Scaling. Therefore the ESP Timer will overflow in approximately 4290 seconds.

- Use CPU Clock for run time stats (FREERTOS_RUN_TIME_STATS_USING_CPU_CLK)

  CPU Clock will be used as the clock source for the generation of run time stats. The CPU Clock has a frequency dependent on ESP32_DEFAULT_CPU_FREQ_MHZ and Dynamic Frequency Scaling (DFS). Therefore the CPU Clock frequency can fluctuate between 80 to 240MHz. Run time stats generated using the CPU Clock represents the number of CPU cycles each task is allocated and DOES NOT reflect the amount of time

each task runs for (as CPU clock frequency can change). If the CPU clock consistently runs at the maximum frequency of 240MHz, it will overflow in approximately 17 seconds.

CONFIG_FREERTOS_USE_TICKLESS_IDLE

Tickless idle support

Found in: Component config > FreeRTOS

If power management support is enabled, FreeRTOS will be able to put the system into light sleep mode when no tasks need to run for a number of ticks. This number can be set using FREERTOS_IDLE_TIME_BEFORE_SLEEP option. This feature is also known as "automatic light sleep" .

Note that timers created using esp_timer APIs may prevent the system from entering sleep mode, even when no tasks need to run.

If disabled, automatic light sleep support will be disabled.

CONFIG_FREERTOS_IDLE_TIME_BEFORE_SLEEP

Minimum number of ticks to enter sleep mode for

Found in: Component config > FreeRTOS > CONFIG_FREERTOS_USE_TICKLESS_IDLE

FreeRTOS will enter light sleep mode if no tasks need to run for this number of ticks.

CONFIG_FREERTOS_DEBUG_INTERNALS

Debug FreeRTOS internals

Found in: Component config > FreeRTOS

Enable this option to show the menu with internal FreeRTOS debugging features. This option does not change any code by itself, it just shows/hides some options.

Contains:

- *CONFIG_FREERTOS_PORTMUX_DEBUG*
- *CONFIG_FREERTOS_PORTMUX_DEBUG_RECURSIVE*

CONFIG_FREERTOS_PORTMUX_DEBUG

Debug portMUX portENTER_CRITICAL/portEXIT_CRITICAL

Found in: Component config > FreeRTOS > CONFIG_FREERTOS_DEBUG_INTERNALS

If enabled, debug information (including integrity checks) will be printed to UART for the port-specific MUX implementation.

CONFIG_FREERTOS_PORTMUX_DEBUG_RECURSIVE

Debug portMUX Recursion

Found in: Component config > FreeRTOS > CONFIG_FREERTOS_DEBUG_INTERNALS

If enabled, additional debug information will be printed for recursive portMUX usage.

CONFIG_FREERTOS_TASK_FUNCTION_WRAPPER

Enclose all task functions in a wrapper function

Found in: Component config > FreeRTOS

If enabled, all FreeRTOS task functions will be enclosed in a wrapper function. If a task function mistakenly returns (i.e. does not delete), the call flow will return to the wrapper function. The wrapper function will then log an error and abort the application. This option is also required for GDB backtraces and C++ exceptions to work correctly inside top-level task functions.

CONFIG_FREERTOS_CHECK_MUTEX_GIVEN_BY_OWNER

Check that mutex semaphore is given by owner task

Found in: Component config > FreeRTOS

If enabled, assert that when a mutex semaphore is given, the task giving the semaphore is the task which is currently holding the mutex.

CONFIG_FREERTOS_CHECK_PORT_CRITICAL_COMPLIANCE

Tests compliance with Vanilla FreeRTOS port*_CRITICAL calls

Found in: Component config > FreeRTOS

If enabled, context of port*_CRITICAL calls (ISR or Non-ISR) would be checked to be in compliance with Vanilla FreeRTOS. e.g Calling port*_CRITICAL from ISR context would cause assert failure

Heap memory debugging

Contains:

- *CONFIG_HEAP_CORRUPTION_DETECTION*

- *CONFIG_HEAP_TRACING*
- *CONFIG_HEAP_TASK_TRACKING*

CONFIG_HEAP_CORRUPTION_DETECTION

Heap corruption detection

Found in: Component config > Heap memory debugging

Enable heap poisoning features to detect heap corruption caused by out-of-bounds access to heap memory.

See the "Heap Memory Debugging" page of the IDF documentation for a description of each level of heap corruption detection.

Available options:

- Basic (no poisoning) (HEAP_POISONING_DISABLED)
- Light impact (HEAP_POISONING_LIGHT)
- Comprehensive (HEAP_POISONING_COMPREHENSIVE)

CONFIG_HEAP_TRACING

Enable heap tracing

Found in: Component config > Heap memory debugging

Enables the heap tracing API defined in esp_heap_trace.h.

This function causes a moderate increase in IRAM code side and a minor increase in heap function (malloc/free/realloc) CPU overhead, even when the tracing feature is not used. So it' s best to keep it disabled unless tracing is being used.

CONFIG_HEAP_TRACING_STACK_DEPTH

Heap tracing stack depth

Found in: Component config > Heap memory debugging > CONFIG_HEAP_TRACING

Number of stack frames to save when tracing heap operation callers.

More stack frames uses more memory in the heap trace buffer (and slows down allocation), but can provide useful information.

CONFIG_HEAP_TASK_TRACKING

Enable heap task tracking

Found in: Component config > Heap memory debugging

Enables tracking the task responsible for each heap allocation.

This function depends on heap poisoning being enabled and adds four more bytes of overhead for each block allocated.

libsodium

Contains:

- *CONFIG_LIBSODIUM_USE_MBEDTLS_SHA*

CONFIG_LIBSODIUM_USE_MBEDTLS_SHA

Use mbedTLS SHA256 & SHA512 implementations

Found in: Component config > libsodium

If this option is enabled, libsodium will use thin wrappers around mbedTLS for SHA256 & SHA512 operations.

This saves some code size if mbedTLS is also used. However it is incompatible with hardware SHA acceleration (due to the way libsodium' s API manages SHA state).

Log output

Contains:

- *CONFIG_LOG_DEFAULT_LEVEL*
- *CONFIG_LOG_COLORS*

CONFIG_LOG_DEFAULT_LEVEL

Default log verbosity

Found in: Component config > Log output

Specify how much output to see in logs by default. You can set lower verbosity level at runtime using esp_log_level_set function.

Note that this setting limits which log statements are compiled into the program. So setting this to, say, "Warning" would mean that changing log level to "Debug" at runtime will not be possible.

Available options:

- No output (LOG_DEFAULT_LEVEL_NONE)
- Error (LOG_DEFAULT_LEVEL_ERROR)
- Warning (LOG_DEFAULT_LEVEL_WARN)
- Info (LOG_DEFAULT_LEVEL_INFO)
- Debug (LOG_DEFAULT_LEVEL_DEBUG)
- Verbose (LOG_DEFAULT_LEVEL_VERBOSE)

CONFIG_LOG_COLORS

Use ANSI terminal colors in log output

Found in: Component config > Log output

Enable ANSI terminal color codes in bootloader output.

In order to view these, your terminal program must support ANSI color codes.

LWIP

Contains:

- *CONFIG_L2_TO_L3_COPY*
- *CONFIG_ETHARP_SUPPORT_VLAN*
- *CONFIG_LWIP_IRAM_OPTIMIZATION*
- *CONFIG_LWIP_MAX_SOCKETS*
- *CONFIG_LWIP_RANDOMIZE_INITIAL_LOCAL_PORTS*
- *CONFIG_USE_ONLY_LWIP_SELECT*
- *CONFIG_LWIP_SO_LINGER*
- *CONFIG_LWIP_SO_REUSE*
- *CONFIG_LWIP_SO_RCVBUF*
- *CONFIG_LWIP_IP4_FRAG*
- *CONFIG_LWIP_IP6_FRAG*
- *CONFIG_LWIP_IP4_REASSEMBLY*

- *CONFIG_LWIP_IP6_REASSEMBLY*
- *CONFIG_LWIP_STATS*
- *CONFIG_LWIP_ETHARP_TRUST_IP_MAC*
- *CONFIG_ESP_GRATUITOUS_ARP*
- *CONFIG_TCPIP_RECVMBOX_SIZE*
- *CONFIG_LWIP_DHCP_DOES_ARP_CHECK*
- *CONFIG_LWIP_DHCP_RESTORE_LAST_IP*
- *DHCP server*
- *CONFIG_LWIP_AUTOIP*
- *CONFIG_LWIP_IPV6_AUTOCONFIG*
- *CONFIG_LWIP_NETIF_LOOPBACK*
- *TCP*
- *UDP*
- *CONFIG_TCPIP_TASK_STACK_SIZE*
- *CONFIG_TCPIP_TASK_AFFINITY*
- *CONFIG_LWIP_IPV6_MEMP_NUM_ND6_QUEUE*
- *CONFIG_LWIP_IPV6_ND6_NUM_NEIGHBORS*
- *CONFIG_PPP_SUPPORT*
- *ICMP*
- *LWIP RAW API*
- *SNTP*
- *CONFIG_LWIP_ESP_LWIP_ASSERT*

CONFIG_L2_TO_L3_COPY

Enable copy between Layer2 and Layer3 packets

Found in: Component config > LWIP

If this feature is enabled, all traffic from layer2(WIFI Driver) will be copied to a new buffer before sending it to layer3(LWIP stack), freeing the layer2 buffer. Please be notified that the total layer2 receiving buffer is fixed and ESP32 currently supports 25 layer2 receiving buffer, when layer2 buffer runs out of memory, then the incoming packets will be dropped in hardware. The layer3 buffer is allocated from the heap, so the total layer3 receiving buffer depends on the

available heap size, when heap runs out of memory, no copy will be sent to layer3 and packet will be dropped in layer2. Please make sure you fully understand the impact of this feature before enabling it.

CONFIG_ETHARP_SUPPORT_VLAN

Support receiving and sending ethernet packets with VLAN header

Found in: Component config > LWIP

ETHARP_SUPPORT_VLAN==1: support receiving and sending ethernet packets with VLAN header. See the description of LWIP_HOOK_VLAN_CHECK and LWIP_HOOK_VLAN_SET hooks to check/set VLAN headers. If ETHARP_VLAN_CHECK is defined, only VLAN-traffic for this VLAN is accepted. If ETHARP_VLAN_CHECK is not defined, all traffic is accepted.

CONFIG_LWIP_IRAM_OPTIMIZATION

Enable LWIP IRAM optimization

Found in: Component config > LWIP

If this feature is enabled, some functions relating to RX/TX in LWIP will be put into IRAM, it can improve UDP/TCP throughput by >10% for single core mode, it doesn't help too much for dual core mode. On the other hand, it needs about 10KB IRAM for these optimizations.

If this feature is disabled, all lwip functions will be put into FLASH.

CONFIG_LWIP_MAX_SOCKETS

Max number of open sockets

Found in: Component config > LWIP

Sockets take up a certain amount of memory, and allowing fewer sockets to be open at the same time conserves memory. Specify the maximum amount of sockets here. The valid value is from 1 to 16.

CONFIG_LWIP_RANDOMIZE_INITIAL_LOCAL_PORTS

Randomize the local port for the first

Found in: Component config > LWIP

LWIP_RANDOMIZE_INITIAL_LOCAL_PORTS==1: randomize the local port for the first local TCP/UDP pcb (default==0). This can prevent creating predictable port numbers after booting a device.

CONFIG_USE_ONLY_LWIP_SELECT

Support LWIP socket select() only

Found in: Component config > LWIP

The virtual filesystem layer of select() redirects sockets to lwip_select() and non-socket file descriptors to their respective driver implementations. If this option is enabled then all calls of select() will be redirected to lwip_select(), therefore, select can be used for sockets only.

CONFIG_LWIP_SO_LINGER

Enable SO_LINGER processing

Found in: Component config > LWIP

Enabling this option allows SO_LINGER processing. l_onoff = 1,l_linger can set the timeout.

If l_linger=0, When a connection is closed, TCP will terminate the connection. This means that TCP will discard any data packets stored in the socket send buffer and send an RST to the peer.

If l_linger!=0,Then closesocket() calls to block the process until the remaining data packets has been sent or timed out.

CONFIG_LWIP_SO_REUSE

Enable SO_REUSEADDR option

Found in: Component config > LWIP

Enabling this option allows binding to a port which remains in TIME_WAIT.

CONFIG_LWIP_SO_REUSE_RXTOALL

SO_REUSEADDR copies broadcast/multicast to all matches

Found in: Component config > LWIP > CONFIG_LWIP_SO_REUSE

Enabling this option means that any incoming broadcast or multicast packet will be copied to all of the local sockets that it matches (may be more than one if SO_REUSEADDR is set on the socket.)

This increases memory overhead as the packets need to be copied, however they are only copied per matching socket. You can safely disable it if you don' t plan to receive broadcast or multicast traffic on more than one socket at a time.

CONFIG_LWIP_SO_RCVBUF

Enable SO_RCVBUF option

Found in: Component config > LWIP

Enabling this option allows checking for available data on a netconn.

CONFIG_LWIP_IP4_FRAG

Enable fragment outgoing IP4 packets

Found in: Component config > LWIP

Enabling this option allows fragmenting outgoing IP4 packets if their size exceeds MTU.

CONFIG_LWIP_IP6_FRAG

Enable fragment outgoing IP6 packets

Found in: Component config > LWIP

Enabling this option allows fragmenting outgoing IP6 packets if their size exceeds MTU.

CONFIG_LWIP_IP4_REASSEMBLY

Enable reassembly incoming fragmented IP4 packets

Found in: Component config > LWIP

Enabling this option allows reassemblying incoming fragmented IP4 packets.

CONFIG_LWIP_IP6_REASSEMBLY

Enable reassembly incoming fragmented IP6 packets

Found in: Component config > LWIP

Enabling this option allows reassemblying incoming fragmented IP6 packets.

CONFIG_LWIP_STATS

Enable LWIP statistics

Found in: Component config > LWIP

Enabling this option allows LWIP statistics

CONFIG_LWIP_ETHARP_TRUST_IP_MAC

Enable LWIP ARP trust

Found in: Component config > LWIP

Enabling this option allows ARP table to be updated.

If this option is enabled, the incoming IP packets cause the ARP table to be updated with the source MAC and IP addresses supplied in the packet. You may want to disable this if you do not trust LAN peers to have the correct addresses, or as a limited approach to attempt to handle spoofing. If disabled, lwIP will need to make a new ARP request if the peer is not already in the ARP table, adding a little latency. The peer *is* in the ARP table if it requested our address before. Also notice that this slows down input processing of every IP packet!

There are two known issues in real application if this feature is enabled: - The LAN peer may have bug to update the ARP table after the ARP entry is aged out. If the ARP entry on the LAN peer is aged out but failed to be updated, all IP packets sent from LWIP to the LAN peer will be dropped by LAN peer. - The LAN peer may not be trustful, the LAN peer may send IP packets to LWIP with two different MACs, but the same IP address. If this happens, the LWIP has problem to receive IP packets from LAN peer.

So the recommendation is to disable this option. Here the LAN peer means the other side to which the ESP station or soft-AP is connected.

CONFIG_ESP_GRATUITOUS_ARP

Send gratuitous ARP periodically

Found in: Component config > LWIP

Enable this option allows to send gratuitous ARP periodically.

This option solve the compatibility issues.If the ARP table of the AP is old, and the AP doesn't send ARP request to update it's ARP table, this will lead to the STA sending IP packet fail. Thus we send gratuitous ARP periodically to let AP update it's ARP table.

CONFIG_GARP_TMR_INTERVAL

GARP timer interval(seconds)

Found in: Component config > LWIP > CONFIG_ESP_GRATUITOUS_ARP

Set the timer interval for gratuitous ARP. The default value is 60s

CONFIG_TCPIP_RECVMBOX_SIZE

TCPIP task receive mail box size

Found in: Component config > LWIP

Set TCPIP task receive mail box size. Generally bigger value means higher throughput but more memory. The value should be bigger than UDP/TCP mail box size.

CONFIG_LWIP_DHCP_DOES_ARP_CHECK

DHCP: Perform ARP check on any offered address

Found in: Component config > LWIP

Enabling this option performs a check (via ARP request) if the offered IP address is not already in use by another host on the network.

CONFIG_LWIP_DHCP_RESTORE_LAST_IP

DHCP: Restore last IP obtained from DHCP server

Found in: Component config > LWIP

When this option is enabled, DHCP client tries to re-obtain last valid IP address obtained from DHCP server. Last valid DHCP configuration is stored in nvs and restored after reset/power-up. If IP is still available, there is no need for sending discovery message to DHCP server and save some time.

DHCP server

Contains:

- *CONFIG_LWIP_DHCPS_LEASE_UNIT*
- *CONFIG_LWIP_DHCPS_MAX_STATION_NUM*

CONFIG_LWIP_DHCPS_LEASE_UNIT

Multiplier for lease time, in seconds

Found in: Component config > LWIP > DHCP server

The DHCP server is calculating lease time multiplying the sent and received times by this number of seconds per unit. The default is 60, that equals one minute.

CONFIG_LWIP_DHCPS_MAX_STATION_NUM

Maximum number of stations

Found in: Component config > LWIP > DHCP server

The maximum number of DHCP clients that are connected to the server. After this number is exceeded, DHCP server removes of the oldest device from it' s address pool, without notification.

CONFIG_LWIP_AUTOIP

Enable IPV4 Link-Local Addressing (AUTOIP)

Found in: Component config > LWIP

Enabling this option allows the device to self-assign an address in the 169.256/16 range if none is assigned statically or via DHCP.

See RFC 3927.

Contains:

- *CONFIG_LWIP_AUTOIP_TRIES*
- *CONFIG_LWIP_AUTOIP_MAX_CONFLICTS*
- *CONFIG_LWIP_AUTOIP_RATE_LIMIT_INTERVAL*

CONFIG_LWIP_AUTOIP_TRIES

DHCP Probes before self-assigning IPv4 LL address

Found in: Component config > LWIP > CONFIG_LWIP_AUTOIP

DHCP client will send this many probes before self-assigning a link local address.

From LWIP help: "This can be set as low as 1 to get an AutoIP address very quickly, but you should be prepared to handle a changing IP address when DHCP overrides AutoIP." (In the case of ESP-IDF, this means multiple SYSTEM_EVENT_STA_GOT_IP events.)

CONFIG_LWIP_AUTOIP_MAX_CONFLICTS

Max IP conflicts before rate limiting

Found in: *Component config* > *LWIP* > *CONFIG_LWIP_AUTOIP*

If the AUTOIP functionality detects this many IP conflicts while self-assigning an address, it will go into a rate limited mode.

CONFIG_LWIP_AUTOIP_RATE_LIMIT_INTERVAL

Rate limited interval (seconds)

Found in: *Component config* > *LWIP* > *CONFIG_LWIP_AUTOIP*

If rate limiting self-assignment requests, wait this long between each request.

CONFIG_LWIP_IPV6_AUTOCONFIG

Enable IPV6 stateless address autoconfiguration

Found in: *Component config* > *LWIP*

Enabling this option allows the devices to IPV6 stateless address autoconfiguration.

See RFC 4862.

CONFIG_LWIP_NETIF_LOOPBACK

Support per-interface loopback

Found in: *Component config* > *LWIP*

Enabling this option means that if a packet is sent with a destination address equal to the interface' s own IP address, it will "loop back" and be received by this interface.

Contains:

- *CONFIG_LWIP_LOOPBACK_MAX_PBUFS*

CONFIG_LWIP_LOOPBACK_MAX_PBUFS

Max queued loopback packets per interface

Found in: *Component config* > *LWIP* > *CONFIG_LWIP_NETIF_LOOPBACK*

Configure the maximum number of packets which can be queued for loopback on a given interface. Reducing this number may cause packets to be dropped, but will avoid filling memory with queued packet data.

TCP

Contains:

- *CONFIG_LWIP_TCP_ISN_HOOK*
- *CONFIG_LWIP_MAX_ACTIVE_TCP*
- *CONFIG_LWIP_MAX_LISTENING_TCP*
- *CONFIG_LWIP_TCP_HIGH_SPEED_RETRANSMISSION*
- *CONFIG_TCP_MAXRTX*
- *CONFIG_TCP_SYNMAXRTX*
- *CONFIG_TCP_MSS*
- *CONFIG_TCP_MSL*
- *CONFIG_TCP_SND_BUF_DEFAULT*
- *CONFIG_TCP_WND_DEFAULT*
- *CONFIG_TCP_RECVMBOX_SIZE*
- *CONFIG_TCP_QUEUE_OOSEQ*
- *CONFIG_ESP_TCP_KEEP_CONNECTION_WHEN_IP_CHANGES*
- *CONFIG_TCP_OVERSIZE*
- *CONFIG_LWIP_WND_SCALE*
- *CONFIG_LWIP_TCP_RTO_TIME*

CONFIG_LWIP_TCP_ISN_HOOK

Enable TCP ISN Hook

Found in: Component config > LWIP > TCP

Enables custom TCP ISN hook to randomize initial sequence number in TCP connection. This is recommended as default lwIP implementation (*tcp_next_iss*) is not very strong, as it does not take into consideration any platform specific entropy source.

CONFIG_LWIP_MAX_ACTIVE_TCP

Maximum active TCP Connections

Found in: Component config > LWIP > TCP

The maximum number of simultaneously active TCP connections. The practical maximum limit is determined by available heap memory at runtime.

Changing this value by itself does not substantially change the memory usage of LWIP, except for preventing new TCP connections after the limit is reached.

CONFIG_LWIP_MAX_LISTENING_TCP

Maximum listening TCP Connections

Found in: Component config > LWIP > TCP

The maximum number of simultaneously listening TCP connections. The practical maximum limit is determined by available heap memory at runtime.

Changing this value by itself does not substantially change the memory usage of LWIP, except for preventing new listening TCP connections after the limit is reached.

CONFIG_LWIP_TCP_HIGH_SPEED_RETRANSMISSION

TCP high speed retransmissions

Found in: Component config > LWIP > TCP

Speed up the TCP retransmission interval. If disabled, it is recommended to change the number of SYN retransmissions to 6, and TCP initial rto time to 3000.

CONFIG_TCP_MAXRTX

Maximum number of retransmissions of data segments

Found in: Component config > LWIP > TCP

Set maximum number of retransmissions of data segments.

CONFIG_TCP_SYNMAXRTX

Maximum number of retransmissions of SYN segments

Found in: Component config > LWIP > TCP

Set maximum number of retransmissions of SYN segments.

CONFIG_TCP_MSS

Maximum Segment Size (MSS)

Found in: Component config > LWIP > TCP

Set maximum segment size for TCP transmission.

Can be set lower to save RAM, the default value 1460(ipv4)/1440(ipv6) will give best throughput. IPv4 TCP_MSS Range: 576 <= TCP_MSS <= 1460 IPv6 TCP_MSS Range: 1220<= TCP_MSS <= 1440

CONFIG_TCP_MSL

Maximum segment lifetime (MSL)

Found in: Component config > LWIP > TCP

Set maximum segment lifetime in in milliseconds.

CONFIG_TCP_SND_BUF_DEFAULT

Default send buffer size

Found in: Component config > LWIP > TCP

Set default send buffer size for new TCP sockets.

Per-socket send buffer size can be changed at runtime with lwip_setsockopt(s, TCP_SNDBUF, ···).

This value must be at least 2x the MSS size, and the default is 4x the default MSS size.

Setting a smaller default SNDBUF size can save some RAM, but will decrease performance.

CONFIG_TCP_WND_DEFAULT

Default receive window size

Found in: Component config > LWIP > TCP

Set default TCP receive window size for new TCP sockets.

Per-socket receive window size can be changed at runtime with lwip_setsockopt(s, TCP_WINDOW, ···).

Setting a smaller default receive window size can save some RAM, but will significantly decrease performance.

CONFIG_TCP_RECVMBOX_SIZE

Default TCP receive mail box size

Found in: Component config > LWIP > TCP

Set TCP receive mail box size. Generally bigger value means higher throughput but more memory. The recommended value is: TCP_WND_DEFAULT/TCP_MSS + 2, e.g. if TCP_WND_DEFAULT=14360, TCP_MSS=1436, then the recommended receive mail box size is (14360/1436 + 2) = 12.

TCP receive mail box is a per socket mail box, when the application receives packets from TCP socket, LWIP core firstly posts the packets to TCP receive mail box and the application then fetches the packets from mail box. It means LWIP can caches maximum TCP_RECCVMBOX_SIZE packets for each TCP socket, so the maximum possible cached TCP packets for all TCP sockets is TCP_RECCVMBOX_SIZE multiples the maximum TCP socket number. In other words, the bigger TCP_RECVMBOX_SIZE means more memory. On the other hand, if the receiv mail box is too small, the mail box may be full. If the mail box is full, the LWIP drops the packets. So generally we need to make sure the TCP receive mail box is big enough to avoid packet drop between LWIP core and application.

CONFIG_TCP_QUEUE_OOSEQ

Queue incoming out-of-order segments

Found in: Component config > LWIP > TCP

Queue incoming out-of-order segments for later use.

Disable this option to save some RAM during TCP sessions, at the expense of increased retransmissions if segments arrive out of order.

CONFIG_ESP_TCP_KEEP_CONNECTION_WHEN_IP_CHANGES

Keep TCP connections when IP changed

Found in: Component config > LWIP > TCP

This option is enabled when the following scenario happen: network dropped and reconnected, IP changes is like: 192.168.0.2->0.0.0.0->192.168.0.2

Disable this option to keep consistent with the original LWIP code behavior.

CONFIG_TCP_OVERSIZE

Pre-allocate transmit PBUF size

Found in: Component config > LWIP > TCP

Allows enabling "oversize" allocation of TCP transmission pbufs ahead of time, which can reduce the length of pbuf chains used for transmission.

This will not make a difference to sockets where Nagle' s algorithm is disabled.

Default value of MSS is fine for most applications, 25% MSS may save some RAM when only transmitting small amounts of data. Disabled will have worst performance and fragmentation characteristics, but uses least RAM overall.

Available options:

- MSS (TCP_OVERSIZE_MSS)
- 25% MSS (TCP_OVERSIZE_QUARTER_MSS)
- Disabled (TCP_OVERSIZE_DISABLE)

CONFIG_LWIP_WND_SCALE

Support TCP window scale

Found in: Component config > LWIP > TCP

Enable this feature to support TCP window scaling.

CONFIG_TCP_RCV_SCALE

Set TCP receiving window scaling factor

Found in: Component config > LWIP > TCP > CONFIG_LWIP_WND_SCALE

Enable this feature to support TCP window scaling.

CONFIG_LWIP_TCP_RTO_TIME

Default TCP rto time

Found in: Component config > LWIP > TCP

Set default TCP rto time for a reasonable initial rto. In bad network environment, recommend set value of rto time to 1500.

UDP

Contains:

- *CONFIG_LWIP_MAX_UDP_PCBS*

- *CONFIG_UDP_RECVMBOX_SIZE*

CONFIG_LWIP_MAX_UDP_PCBS

Maximum active UDP control blocks

Found in: Component config > LWIP > UDP

The maximum number of active UDP "connections" (ie UDP sockets sending/receiving data). The practical maximum limit is determined by available heap memory at runtime.

CONFIG_UDP_RECVMBOX_SIZE

Default UDP receive mail box size

Found in: Component config > LWIP > UDP

Set UDP receive mail box size. The recommended value is 6.

UDP receive mail box is a per socket mail box, when the application receives packets from UDP socket, LWIP core firstly posts the packets to UDP receive mail box and the application then fetches the packets from mail box. It means LWIP can caches maximum UDP_RECCVMBOX_SIZE packets for each UDP socket, so the maximum possible cached UDP packets for all UDP sockets is UDP_RECCVMBOX_SIZE multiples the maximum UDP socket number. In other words, the bigger UDP_RECVMBOX_SIZE means more memory. On the other hand, if the receiv mail box is too small, the mail box may be full. If the mail box is full, the LWIP drops the packets. So generally we need to make sure the UDP receive mail box is big enough to avoid packet drop between LWIP core and application.

CONFIG_TCPIP_TASK_STACK_SIZE

TCP/IP Task Stack Size

Found in: Component config > LWIP

Configure TCP/IP task stack size, used by LWIP to process multi-threaded TCP/IP operations. Setting this stack too small will result in stack overflow crashes.

CONFIG_TCPIP_TASK_AFFINITY

TCP/IP task affinity

Found in: Component config > LWIP

Allows setting LwIP tasks affinity, i.e. whether the task is pinned to CPU0, pinned to CPU1, or allowed to run on any CPU. Currently this applies to "TCP/IP" task and "Ping" task.

Available options:

- No affinity (TCPIP_TASK_AFFINITY_NO_AFFINITY)
- CPU0 (TCPIP_TASK_AFFINITY_CPU0)
- CPU1 (TCPIP_TASK_AFFINITY_CPU1)

CONFIG_LWIP_IPV6_MEMP_NUM_ND6_QUEUE

Max number of IPv6 packets to queue during MAC resolution

Found in: Component config > LWIP

Config max number of IPv6 packets to queue during MAC resolution.

CONFIG_LWIP_IPV6_ND6_NUM_NEIGHBORS

Max number of entries in IPv6 neighbor cache

Found in: Component config > LWIP

Config max number of entries in IPv6 neighbor cache.

CONFIG_PPP_SUPPORT

Enable PPP support (new/experimental)

Found in: Component config > LWIP

Enable PPP stack. Now only PPP over serial is possible.

PPP over serial support is experimental and unsupported.

Contains:

- *CONFIG_PPP_NOTIFY_PHASE_SUPPORT*
- *CONFIG_PPP_PAP_SUPPORT*
- *CONFIG_PPP_CHAP_SUPPORT*
- *CONFIG_PPP_MSCHAP_SUPPORT*
- *CONFIG_PPP_MPPE_SUPPORT*
- *CONFIG_PPP_DEBUG_ON*

CONFIG_PPP_NOTIFY_PHASE_SUPPORT

Enable Notify Phase Callback

Found in: Component config > LWIP > CONFIG_PPP_SUPPORT

Enable to set a callback which is called on change of the internal PPP state machine.

CONFIG_PPP_PAP_SUPPORT

Enable PAP support

Found in: Component config > LWIP > CONFIG_PPP_SUPPORT

Enable Password Authentication Protocol (PAP) support

CONFIG_PPP_CHAP_SUPPORT

Enable CHAP support

Found in: Component config > LWIP > CONFIG_PPP_SUPPORT

Enable Challenge Handshake Authentication Protocol (CHAP) support

CONFIG_PPP_MSCHAP_SUPPORT

Enable MSCHAP support

Found in: Component config > LWIP > CONFIG_PPP_SUPPORT

Enable Microsoft version of the Challenge-Handshake Authentication Protocol (MSCHAP) support

CONFIG_PPP_MPPE_SUPPORT

Enable MPPE support

Found in: Component config > LWIP > CONFIG_PPP_SUPPORT

Enable Microsoft Point-to-Point Encryption (MPPE) support

CONFIG_PPP_DEBUG_ON

Enable PPP debug log output

Found in: Component config > LWIP > CONFIG_PPP_SUPPORT

Enable PPP debug log output

ICMP

Contains:

- *CONFIG_LWIP_MULTICAST_PING*
- *CONFIG_LWIP_BROADCAST_PING*

CONFIG_LWIP_MULTICAST_PING

Respond to multicast pings

Found in: Component config > LWIP > ICMP

CONFIG_LWIP_BROADCAST_PING

Respond to broadcast pings

Found in: Component config > LWIP > ICMP

LWIP RAW API

Contains:

- *CONFIG_LWIP_MAX_RAW_PCBS*

CONFIG_LWIP_MAX_RAW_PCBS

Maximum LWIP RAW PCBs

Found in: Component config > LWIP > LWIP RAW API

The maximum number of simultaneously active LWIP RAW protocol control blocks. The practical maximum limit is determined by available heap memory at runtime.

SNTP

Contains:

- *CONFIG_LWIP_DHCP_MAX_NTP_SERVERS*
- *CONFIG_LWIP_SNTP_UPDATE_DELAY*

CONFIG_LWIP_DHCP_MAX_NTP_SERVERS

Maximum number of NTP servers

Found in: Component config > LWIP > SNTP

Set maximum number of NTP servers used by LwIP SNTP module. First argument of sntp_setserver/sntp_setservername functions is limited to this value.

CONFIG_LWIP_SNTP_UPDATE_DELAY

Request interval to update time (ms)

Found in: Component config > LWIP > SNTP

This option allows you to set the time update period via SNTP. Default is 1 hour. Must not be below 15 seconds by specification. (SNTPv4 RFC 4330 enforces a minimum update time of 15 seconds).

CONFIG_LWIP_ESP_LWIP_ASSERT

Enable LWIP ASSERT checks

Found in: Component config > LWIP

Enable this option allows lwip to check assert. It is recommended to keep it open, do not close it.

mbedTLS

Contains:

- *CONFIG_MBEDTLS_MEM_ALLOC_MODE*
- *CONFIG_MBEDTLS_SSL_MAX_CONTENT_LEN*
- *CONFIG_MBEDTLS_ASYMMETRIC_CONTENT_LEN*
- *CONFIG_MBEDTLS_DEBUG*
- *CONFIG_MBEDTLS_ECP_RESTARTABLE*
- *CONFIG_MBEDTLS_CMAC_C*
- *CONFIG_MBEDTLS_HARDWARE_AES*
- *CONFIG_MBEDTLS_HARDWARE_MPI*
- *CONFIG_MBEDTLS_HARDWARE_SHA*

- *CONFIG_MBEDTLS_HAVE_TIME*
- *CONFIG_MBEDTLS_TLS_MODE*
- *TLS Key Exchange Methods*
- *CONFIG_MBEDTLS_SSL_RENEGOTIATION*
- *CONFIG_MBEDTLS_SSL_PROTO_SSL3*
- *CONFIG_MBEDTLS_SSL_PROTO_TLS1*
- *CONFIG_MBEDTLS_SSL_PROTO_TLS1_1*
- *CONFIG_MBEDTLS_SSL_PROTO_TLS1_2*
- *CONFIG_MBEDTLS_SSL_PROTO_DTLS*
- *CONFIG_MBEDTLS_SSL_ALPN*
- *CONFIG_MBEDTLS_SSL_SESSION_TICKETS*
- *Symmetric Ciphers*
- *CONFIG_MBEDTLS_RIPEMD160_C*
- *Certificates*
- *CONFIG_MBEDTLS_ECP_C*

CONFIG_MBEDTLS_MEM_ALLOC_MODE

Memory allocation strategy

Found in: Component config > mbedTLS

Allocation strategy for mbedTLS, essentially provides ability to allocate all required dynamic allocations from,

- Internal DRAM memory only
- External SPIRAM memory only
- Either internal or external memory based on default malloc() behavior in ESP-IDF
- Custom allocation mode, by overwriting calloc()/free() using mbedtls_platform_set_calloc_free() function

Recommended mode here is always internal, since that is most preferred from security perspective. But if application requirement does not allow sufficient free internal memory then alternate mode can be selected.

Available options:

- Internal memory (MBEDTLS_INTERNAL_MEM_ALLOC)

- External SPIRAM (MBEDTLS_EXTERNAL_MEM_ALLOC)
- Default alloc mode (MBEDTLS_DEFAULT_MEM_ALLOC)
- Custom alloc mode (MBEDTLS_CUSTOM_MEM_ALLOC)

CONFIG_MBEDTLS_SSL_MAX_CONTENT_LEN

TLS maximum message content length

Found in: Component config > mbedTLS

Maximum TLS message length (in bytes) supported by mbedTLS.

16384 is the default and this value is required to comply fully with TLS standards.

However you can set a lower value in order to save RAM. This is safe if the other end of the connection supports Maximum Fragment Length Negotiation Extension (max_fragment_length, see RFC6066) or you know for certain that it will never send a message longer than a certain number of bytes.

If the value is set too low, symptoms are a failed TLS handshake or a return value of MBEDTLS_ERR_SSL_INVALID_RECORD (-0x7200).

CONFIG_MBEDTLS_ASYMMETRIC_CONTENT_LEN

Asymmetric in/out fragment length

Found in: Component config > mbedTLS

If enabled, this option allows customizing TLS in/out fragment length in asymmetric way. Please note that enabling this with default values saves 12KB of dynamic memory per TLS connection.

CONFIG_MBEDTLS_SSL_IN_CONTENT_LEN

TLS maximum incoming fragment length

Found in: Component config > mbedTLS > CONFIG_MBEDTLS_ASYMMETRIC_CONTENT_LEN

This defines maximum incoming fragment length, overriding default maximum content length (MBEDTLS_SSL_MAX_CONTENT_LEN).

CONFIG_MBEDTLS_SSL_OUT_CONTENT_LEN

TLS maximum outgoing fragment length

Found in: Component config > mbedTLS > CONFIG_MBEDTLS_ASYMMETRIC_CONTENT_LEN

This defines maximum outgoing fragment length, overriding default maximum content length (MBEDTLS_SSL_MAX_CONTENT_LEN).

CONFIG_MBEDTLS_DEBUG

Enable mbedTLS debugging

Found in: Component config > mbedTLS

Enable mbedTLS debugging functions at compile time.

If this option is enabled, you can include "mbedtls/esp_debug.h" and call mbedtls_esp_enable_debug_log() at runtime in order to enable mbedTLS debug output via the ESP log mechanism.

CONFIG_MBEDTLS_ECP_RESTARTABLE

Enable mbedTLS ecp restartable

Found in: Component config > mbedTLS

Enable "non-blocking" ECC operations that can return early and be resumed.

CONFIG_MBEDTLS_CMAC_C

Enable CMAC mode for block ciphers

Found in: Component config > mbedTLS

Enable the CMAC (Cipher-based Message Authentication Code) mode for block ciphers.

CONFIG_MBEDTLS_HARDWARE_AES

Enable hardware AES acceleration

Found in: Component config > mbedTLS

Enable hardware accelerated AES encryption & decryption.

Note that if the ESP32 CPU is running at 240MHz, hardware AES does not offer any speed boost over software AES.

CONFIG_MBEDTLS_HARDWARE_MPI

Enable hardware MPI (bignum) acceleration

Found in: Component config > mbedTLS

Enable hardware accelerated multiple precision integer operations.

Hardware accelerated multiplication, modulo multiplication, and modular exponentiation for up to 4096 bit results.

These operations are used by RSA.

CONFIG_MBEDTLS_MPI_USE_INTERRUPT

Use interrupt for MPI operations

Found in: Component config > mbedTLS > CONFIG_MBEDTLS_HARDWARE_MPI

Use an interrupt to coordinate MPI operations.

This allows other code to run on the CPU while an MPI operation is pending. Otherwise the CPU busy-waits.

CONFIG_MBEDTLS_HARDWARE_SHA

Enable hardware SHA acceleration

Found in: Component config > mbedTLS

Enable hardware accelerated SHA1, SHA256, SHA384 & SHA512 in mbedTLS.

Due to a hardware limitation, hardware acceleration is only guaranteed if SHA digests are calculated one at a time. If more than one SHA digest is calculated at the same time, one will be calculated fully in hardware and the rest will be calculated (at least partially calculated) in software. This happens automatically.

SHA hardware acceleration is faster than software in some situations but slower in others. You should benchmark to find the best setting for you.

CONFIG_MBEDTLS_HAVE_TIME

Enable mbedtls time

Found in: Component config > mbedTLS

System has time.h and time(). The time does not need to be correct, only time differences are used.

CONFIG_MBEDTLS_HAVE_TIME_DATE

Enable mbedtls certificate expiry check

Found in: Component config > mbedTLS > CONFIG_MBEDTLS_HAVE_TIME

System has time.h and time(), gmtime() and the clock is correct. The time needs to be correct (not necesarily very accurate, but at least the date should be correct). This is used to verify the validity period of X.509 certificates.

It is suggested that you should get the real time by "SNTP".

CONFIG_MBEDTLS_TLS_MODE

TLS Protocol Role

Found in: Component config > mbedTLS

mbedTLS can be compiled with protocol support for the TLS server, TLS client, or both server and client.

Reducing the number of TLS roles supported saves code size.

Available options:

- Server & Client (MBEDTLS_TLS_SERVER_AND_CLIENT)
- Server (MBEDTLS_TLS_SERVER_ONLY)
- Client (MBEDTLS_TLS_CLIENT_ONLY)
- None (MBEDTLS_TLS_DISABLED)

TLS Key Exchange Methods

Contains:

- *CONFIG_MBEDTLS_PSK_MODES*
- *CONFIG_MBEDTLS_KEY_EXCHANGE_RSA*
- *CONFIG_MBEDTLS_KEY_EXCHANGE_DHE_RSA*
- *CONFIG_MBEDTLS_KEY_EXCHANGE_ELLIPTIC_CURVE*

CONFIG_MBEDTLS_PSK_MODES

Enable pre-shared-key ciphersuites

Found in: Component config > mbedTLS > TLS Key Exchange Methods

Enable to show configuration for different types of pre-shared-key TLS authentatication methods.

Leaving this options disabled will save code size if they are not used.

CONFIG_MBEDTLS_KEY_EXCHANGE_PSK

Enable PSK based ciphersuite modes

Found in: Component config > mbedTLS > TLS Key Exchange Methods > CONFIG_MBEDTLS_PSK_MODES

Enable to support symmetric key PSK (pre-shared-key) TLS key exchange modes.

CONFIG_MBEDTLS_KEY_EXCHANGE_DHE_PSK

Enable DHE-PSK based ciphersuite modes

Found in: Component config > mbedTLS > TLS Key Exchange Methods > CONFIG_MBEDTLS_PSK_MODES

Enable to support Diffie-Hellman PSK (pre-shared-key) TLS authentication modes.

CONFIG_MBEDTLS_KEY_EXCHANGE_ECDHE_PSK

Enable ECDHE-PSK based ciphersuite modes

Found in: Component config > mbedTLS > TLS Key Exchange Methods > CONFIG_MBEDTLS_PSK_MODES

Enable to support Elliptic-Curve-Diffie-Hellman PSK (pre-shared-key) TLS authentication modes.

CONFIG_MBEDTLS_KEY_EXCHANGE_RSA_PSK

Enable RSA-PSK based ciphersuite modes

Found in: Component config > mbedTLS > TLS Key Exchange Methods > CONFIG_MBEDTLS_PSK_MODES

Enable to support RSA PSK (pre-shared-key) TLS authentication modes.

CONFIG_MBEDTLS_KEY_EXCHANGE_RSA

Enable RSA-only based ciphersuite modes

Found in: Component config > mbedTLS > TLS Key Exchange Methods

Enable to support ciphersuites with prefix TLS-RSA-WITH-

CONFIG_MBEDTLS_KEY_EXCHANGE_DHE_RSA

Enable DHE-RSA based ciphersuite modes

Found in: Component config > mbedTLS > TLS Key Exchange Methods

Enable to support ciphersuites with prefix TLS-DHE-RSA-WITH-

CONFIG_MBEDTLS_KEY_EXCHANGE_ELLIPTIC_CURVE

Support Elliptic Curve based ciphersuites

Found in: Component config > mbedTLS > TLS Key Exchange Methods

Enable to show Elliptic Curve based ciphersuite mode options.

Disabling all Elliptic Curve ciphersuites saves code size and can give slightly faster TLS handshakes, provided the server supports RSA-only ciphersuite modes.

CONFIG_MBEDTLS_KEY_EXCHANGE_ECDHE_RSA

Enable ECDHE-RSA based ciphersuite modes

Found in: Component config > mbedTLS > TLS Key Exchange Methods > CONFIG_MBEDTLS_KEY_EXCHANGE_ELLIPTIC_CURVE

Enable to support ciphersuites with prefix TLS-ECDHE-RSA-WITH-

CONFIG_MBEDTLS_KEY_EXCHANGE_ECDHE_ECDSA

Enable ECDHE-ECDSA based ciphersuite modes

Found in: Component config > mbedTLS > TLS Key Exchange Methods > CONFIG_MBEDTLS_KEY_EXCHANGE_ELLIPTIC_CURVE

Enable to support ciphersuites with prefix TLS-ECDHE-RSA-WITH-

CONFIG_MBEDTLS_KEY_EXCHANGE_ECDH_ECDSA

Enable ECDH-ECDSA based ciphersuite modes

Found in: Component config > mbedTLS > TLS Key Exchange Methods > CONFIG_MBEDTLS_KEY_EXCHANGE_ELLIPTIC_CURVE

Enable to support ciphersuites with prefix TLS-ECDHE-RSA-WITH-

CONFIG_MBEDTLS_KEY_EXCHANGE_ECDH_RSA

Enable ECDH-RSA based ciphersuite modes

Found in: Component config > mbedTLS > TLS Key Exchange Methods > CONFIG_MBEDTLS_KEY_EXCHANGE_ELLIPTIC_CURVE

Enable to support ciphersuites with prefix TLS-ECDHE-RSA-WITH-

CONFIG_MBEDTLS_SSL_RENEGOTIATION

Support TLS renegotiation

Found in: Component config > mbedTLS

The two main uses of renegotiation are (1) refresh keys on long-lived connections and (2) client authentication after the initial handshake. If you don' t need renegotiation, disabling it will save code size and reduce the possibility of abuse/vulnerability.

CONFIG_MBEDTLS_SSL_PROTO_SSL3

Legacy SSL 3.0 support

Found in: Component config > mbedTLS

Support the legacy SSL 3.0 protocol. Most servers will speak a newer TLS protocol these days.

CONFIG_MBEDTLS_SSL_PROTO_TLS1

Support TLS 1.0 protocol

Found in: Component config > mbedTLS

CONFIG_MBEDTLS_SSL_PROTO_TLS1_1

Support TLS 1.1 protocol

Found in: Component config > mbedTLS

CONFIG_MBEDTLS_SSL_PROTO_TLS1_2

Support TLS 1.2 protocol

Found in: Component config > mbedTLS

CONFIG_MBEDTLS_SSL_PROTO_DTLS

Support DTLS protocol (all versions)

Found in: Component config > mbedTLS

Requires TLS 1.1 to be enabled for DTLS 1.0 Requires TLS 1.2 to be enabled for DTLS 1.2

CONFIG_MBEDTLS_SSL_ALPN

Support ALPN (Application Layer Protocol Negotiation)

Found in: Component config > mbedTLS

Disabling this option will save some code size if it is not needed.

CONFIG_MBEDTLS_SSL_SESSION_TICKETS

TLS: Support RFC 5077 SSL session tickets

Found in: Component config > mbedTLS

Support RFC 5077 session tickets. See mbedTLS documentation for more details.

Disabling this option will save some code size.

Symmetric Ciphers

Contains:

- *CONFIG_MBEDTLS_AES_C*
- *CONFIG_MBEDTLS_CAMELLIA_C*
- *CONFIG_MBEDTLS_DES_C*
- *CONFIG_MBEDTLS_RC4_MODE*
- *CONFIG_MBEDTLS_BLOWFISH_C*
- *CONFIG_MBEDTLS_XTEA_C*
- *CONFIG_MBEDTLS_CCM_C*
- *CONFIG_MBEDTLS_GCM_C*

CONFIG_MBEDTLS_AES_C

AES block cipher

Found in: Component config > mbedTLS > Symmetric Ciphers

CONFIG_MBEDTLS_CAMELLIA_C

Camellia block cipher

Found in: Component config > mbedTLS > Symmetric Ciphers

CONFIG_MBEDTLS_DES_C

DES block cipher (legacy, insecure)

Found in: Component config > mbedTLS > Symmetric Ciphers

Enables the DES block cipher to support 3DES-based TLS ciphersuites.

3DES is vulnerable to the Sweet32 attack and should only be enabled if absolutely necessary.

CONFIG_MBEDTLS_RC4_MODE

RC4 Stream Cipher (legacy, insecure)

Found in: Component config > mbedTLS > Symmetric Ciphers

ARCFOUR (RC4) stream cipher can be disabled entirely, enabled but not added to default ciphersuites, or enabled completely.

Please consider the security implications before enabling RC4.

Available options:

- Disabled (MBEDTLS_RC4_DISABLED)
- Enabled, not in default ciphersuites (MBEDTLS_RC4_ENABLED_NO_DEFAULT)
- Enabled (MBEDTLS_RC4_ENABLED)

CONFIG_MBEDTLS_BLOWFISH_C

Blowfish block cipher (read help)

Found in: Component config > mbedTLS > Symmetric Ciphers

Enables the Blowfish block cipher (not used for TLS sessions.)

The Blowfish cipher is not used for mbedTLS TLS sessions but can be used for other purposes. Read up on the limitations of Blowfish (including Sweet32) before enabling.

CONFIG_MBEDTLS_XTEA_C

XTEA block cipher

Found in: Component config > mbedTLS > Symmetric Ciphers

Enables the XTEA block cipher.

CONFIG_MBEDTLS_CCM_C

CCM (Counter with CBC-MAC) block cipher modes

Found in: Component config > mbedTLS > Symmetric Ciphers

Enable Counter with CBC-MAC (CCM) modes for AES and/or Camellia ciphers.

Disabling this option saves some code size.

CONFIG_MBEDTLS_GCM_C

GCM (Galois/Counter) block cipher modes

Found in: Component config > mbedTLS > Symmetric Ciphers

Enable Galois/Counter Mode for AES and/or Camellia ciphers.

This option is generally faster than CCM.

CONFIG_MBEDTLS_RIPEMD160_C

Enable RIPEMD-160 hash algorithm

Found in: Component config > mbedTLS

Enable the RIPEMD-160 hash algorithm.

Certificates

Contains:

- *CONFIG_MBEDTLS_PEM_PARSE_C*
- *CONFIG_MBEDTLS_PEM_WRITE_C*
- *CONFIG_MBEDTLS_X509_CRL_PARSE_C*

- *CONFIG_MBEDTLS_X509_CSR_PARSE_C*

CONFIG_MBEDTLS_PEM_PARSE_C

Read & Parse PEM formatted certificates

Found in: Component config > mbedTLS > Certificates

Enable decoding/parsing of PEM formatted certificates.

If your certificates are all in the simpler DER format, disabling this option will save some code size.

CONFIG_MBEDTLS_PEM_WRITE_C

Write PEM formatted certificates

Found in: Component config > mbedTLS > Certificates

Enable writing of PEM formatted certificates.

If writing certificate data only in DER format, disabling this option will save some code size.

CONFIG_MBEDTLS_X509_CRL_PARSE_C

X.509 CRL parsing

Found in: Component config > mbedTLS > Certificates

Support for parsing X.509 Certificate Revocation Lists.

CONFIG_MBEDTLS_X509_CSR_PARSE_C

X.509 CSR parsing

Found in: Component config > mbedTLS > Certificates

Support for parsing X.509 Certificate Signing Requests

CONFIG_MBEDTLS_ECP_C

Elliptic Curve Ciphers

Found in: Component config > mbedTLS

Contains:

- *CONFIG_MBEDTLS_ECDH_C*

- *CONFIG_MBEDTLS_ECP_DP_SECP192R1_ENABLED*
- *CONFIG_MBEDTLS_ECP_DP_SECP224R1_ENABLED*
- *CONFIG_MBEDTLS_ECP_DP_SECP256R1_ENABLED*
- *CONFIG_MBEDTLS_ECP_DP_SECP384R1_ENABLED*
- *CONFIG_MBEDTLS_ECP_DP_SECP521R1_ENABLED*
- *CONFIG_MBEDTLS_ECP_DP_SECP192K1_ENABLED*
- *CONFIG_MBEDTLS_ECP_DP_SECP224K1_ENABLED*
- *CONFIG_MBEDTLS_ECP_DP_SECP256K1_ENABLED*
- *CONFIG_MBEDTLS_ECP_DP_BP256R1_ENABLED*
- *CONFIG_MBEDTLS_ECP_DP_BP384R1_ENABLED*
- *CONFIG_MBEDTLS_ECP_DP_BP512R1_ENABLED*
- *CONFIG_MBEDTLS_ECP_DP_CURVE25519_ENABLED*
- *CONFIG_MBEDTLS_ECP_NIST_OPTIM*

CONFIG_MBEDTLS_ECDH_C

Elliptic Curve Diffie-Hellman (ECDH)

Found in: Component config > mbedTLS > CONFIG_MBEDTLS_ECP_C

Enable ECDH. Needed to use ECDHE-xxx TLS ciphersuites.

CONFIG_MBEDTLS_ECDSA_C

Elliptic Curve DSA

Found in: Component config > mbedTLS > CONFIG_MBEDTLS_ECP_C > CONFIG_MBEDTLS_ECDH_C

Enable ECDSA. Needed to use ECDSA-xxx TLS ciphersuites.

CONFIG_MBEDTLS_ECP_DP_SECP192R1_ENABLED

Enable SECP192R1 curve

Found in: Component config > mbedTLS > CONFIG_MBEDTLS_ECP_C

Enable support for SECP192R1 Elliptic Curve.

CONFIG_MBEDTLS_ECP_DP_SECP224R1_ENABLED

Enable SECP224R1 curve

Found in: Component config > mbedTLS > CONFIG_MBEDTLS_ECP_C

Enable support for SECP224R1 Elliptic Curve.

CONFIG_MBEDTLS_ECP_DP_SECP256R1_ENABLED

Enable SECP256R1 curve

Found in: Component config > mbedTLS > CONFIG_MBEDTLS_ECP_C

Enable support for SECP256R1 Elliptic Curve.

CONFIG_MBEDTLS_ECP_DP_SECP384R1_ENABLED

Enable SECP384R1 curve

Found in: Component config > mbedTLS > CONFIG_MBEDTLS_ECP_C

Enable support for SECP384R1 Elliptic Curve.

CONFIG_MBEDTLS_ECP_DP_SECP521R1_ENABLED

Enable SECP521R1 curve

Found in: Component config > mbedTLS > CONFIG_MBEDTLS_ECP_C

Enable support for SECP521R1 Elliptic Curve.

CONFIG_MBEDTLS_ECP_DP_SECP192K1_ENABLED

Enable SECP192K1 curve

Found in: Component config > mbedTLS > CONFIG_MBEDTLS_ECP_C

Enable support for SECP192K1 Elliptic Curve.

CONFIG_MBEDTLS_ECP_DP_SECP224K1_ENABLED

Enable SECP224K1 curve

Found in: Component config > mbedTLS > CONFIG_MBEDTLS_ECP_C

Enable support for SECP224K1 Elliptic Curve.

CONFIG_MBEDTLS_ECP_DP_SECP256K1_ENABLED

Enable SECP256K1 curve

Found in: Component config > mbedTLS > CONFIG_MBEDTLS_ECP_C

Enable support for SECP256K1 Elliptic Curve.

CONFIG_MBEDTLS_ECP_DP_BP256R1_ENABLED

Enable BP256R1 curve

Found in: Component config > mbedTLS > CONFIG_MBEDTLS_ECP_C

support for DP Elliptic Curve.

CONFIG_MBEDTLS_ECP_DP_BP384R1_ENABLED

Enable BP384R1 curve

Found in: Component config > mbedTLS > CONFIG_MBEDTLS_ECP_C

support for DP Elliptic Curve.

CONFIG_MBEDTLS_ECP_DP_BP512R1_ENABLED

Enable BP512R1 curve

Found in: Component config > mbedTLS > CONFIG_MBEDTLS_ECP_C

support for DP Elliptic Curve.

CONFIG_MBEDTLS_ECP_DP_CURVE25519_ENABLED

Enable CURVE25519 curve

Found in: Component config > mbedTLS > CONFIG_MBEDTLS_ECP_C

Enable support for CURVE25519 Elliptic Curve.

CONFIG_MBEDTLS_ECP_NIST_OPTIM

NIST ‘modulo p’ optimisations

Found in: Component config > mbedTLS > CONFIG_MBEDTLS_ECP_C

NIST ‘modulo p’ optimisations increase Elliptic Curve operation performance.

Disabling this option saves some code size.

end of Elliptic Curve options

mDNS

Contains:

- *CONFIG_MDNS_MAX_SERVICES*

CONFIG_MDNS_MAX_SERVICES

Max number of services

Found in: Component config > mDNS

Services take up a certain amount of memory, and allowing fewer services to be open at the same time conserves memory. Specify the maximum amount of services here. The valid value is from 1 to 64.

ESP-MQTT Configurations

Contains:

- *CONFIG_MQTT_PROTOCOL_311*
- *CONFIG_MQTT_TRANSPORT_SSL*
- *CONFIG_MQTT_TRANSPORT_WEBSOCKET*
- *CONFIG_MQTT_USE_CUSTOM_CONFIG*
- *CONFIG_MQTT_TASK_CORE_SELECTION_ENABLED*
- *CONFIG_MQTT_CUSTOM_OUTBOX*

CONFIG_MQTT_PROTOCOL_311

Enable MQTT protocol 3.1.1

Found in: Component config > ESP-MQTT Configurations

If not, this library will use MQTT protocol 3.1

CONFIG_MQTT_TRANSPORT_SSL

Enable MQTT over SSL

Found in: Component config > ESP-MQTT Configurations

Enable MQTT transport over SSL with mbedtls

CONFIG_MQTT_TRANSPORT_WEBSOCKET

Enable MQTT over Websocket

Found in: Component config > ESP-MQTT Configurations

Enable MQTT transport over Websocket.

CONFIG_MQTT_TRANSPORT_WEBSOCKET_SECURE

Enable MQTT over Websocket Secure

Found in: Component config > ESP-MQTT Configurations > CONFIG_MQTT_TRANSPORT_WEBSOCKET

Enable MQTT transport over Websocket Secure.

CONFIG_MQTT_USE_CUSTOM_CONFIG

MQTT Using custom configurations

Found in: Component config > ESP-MQTT Configurations

Custom MQTT configurations.

CONFIG_MQTT_TCP_DEFAULT_PORT

Default MQTT over TCP port

Found in: Component config > ESP-MQTT Configurations > CONFIG_MQTT_USE_CUSTOM_CONFIG

Default MQTT over TCP port

CONFIG_MQTT_SSL_DEFAULT_PORT

Default MQTT over SSL port

Found in: Component config > ESP-MQTT Configurations > CONFIG_MQTT_USE_CUSTOM_CONFIG

Default MQTT over SSL port

CONFIG_MQTT_WS_DEFAULT_PORT

Default MQTT over Websocket port

Found in: Component config > ESP-MQTT Configurations > CONFIG_MQTT_USE_CUSTOM_CONFIG

Default MQTT over Websocket port

CONFIG_MQTT_WSS_DEFAULT_PORT

Default MQTT over Websocket Secure port

Found in: Component config > ESP-MQTT Configurations > CONFIG_MQTT_USE_CUSTOM_CONFIG

Default MQTT over Websocket Secure port

CONFIG_MQTT_BUFFER_SIZE

Default MQTT Buffer Size

Found in: Component config > ESP-MQTT Configurations > CONFIG_MQTT_USE_CUSTOM_CONFIG

This buffer size using for both transmit and receive

CONFIG_MQTT_TASK_STACK_SIZE

MQTT task stack size

Found in: Component config > ESP-MQTT Configurations > CONFIG_MQTT_USE_CUSTOM_CONFIG

MQTT task stack size

CONFIG_MQTT_DISABLE_API_LOCKS

Disable API locks

Found in: Component config > ESP-MQTT Configurations > CONFIG_MQTT_USE_CUSTOM_CONFIG

Default config employs API locks to protect internal structures. It is possible to disable these locks if the user code doesn't access MQTT API from multiple concurrent tasks

CONFIG_MQTT_TASK_PRIORITY

MQTT task priority

Found in: Component config > ESP-MQTT Configurations > CONFIG_MQTT_USE_CUSTOM_CONFIG

MQTT task priority. Higher number denotes higher priority.

CONFIG_MQTT_TASK_CORE_SELECTION_ENABLED

Enable MQTT task core selection

Found in: Component config > ESP-MQTT Configurations

This will enable core selection

CONFIG_MQTT_TASK_CORE_SELECTION

Core to use ?

Found in: Component config > ESP-MQTT Configurations > CONFIG_MQTT_TASK_CORE_SELECTION_ENABLED

Available options:

- Core 0 (MQTT_USE_CORE_0)
- Core 1 (MQTT_USE_CORE_1)

CONFIG_MQTT_CUSTOM_OUTBOX

Enable custom outbox implementation

Found in: Component config > ESP-MQTT Configurations

Set to true if a specific implementation of message outbox is needed (e.g. persistant outbox in NVM or similar).

NVS

Contains:

- *CONFIG_NVS_ENCRYPTION*

CONFIG_NVS_ENCRYPTION

Enable NVS encryption

Found in: Component config > NVS

This option enables encryption for NVS. When enabled, AES-XTS is used to encrypt the complete NVS data, except the page headers. It requires XTS encryption keys to be stored in an encrypted partition. This means enabling flash encryption is a pre-requisite for this feature.

OpenSSL

Contains:

- *CONFIG_OPENSSL_DEBUG*
- *CONFIG_OPENSSL_ASSERT*

CONFIG_OPENSSL_DEBUG

Enable OpenSSL debugging

Found in: Component config > OpenSSL

Enable OpenSSL debugging function.

If the option is enabled, "SSL_DEBUG" works.

CONFIG_OPENSSL_DEBUG_LEVEL

OpenSSL debugging level

Found in: Component config > OpenSSL > CONFIG_OPENSSL_DEBUG

OpenSSL debugging level.

Only function whose debugging level is higher than "OPENSSL_DEBUG_LEVEL" works.

For example: If OPENSSL_DEBUG_LEVEL = 2, you use function "SSL_DEBUG(1, "malloc failed")". Because $1 < 2$, it will not print.

CONFIG_OPENSSL_LOWLEVEL_DEBUG

Enable OpenSSL low-level module debugging

Found in: Component config > OpenSSL > CONFIG_OPENSSL_DEBUG

If the option is enabled, low-level module debugging function of OpenSSL is enabled, e.g. mbedtls internal debugging function.

CONFIG_OPENSSL_ASSERT

Select OpenSSL assert function

Found in: Component config > OpenSSL

OpenSSL function needs "assert" function to check if input parameters are valid.

If you want to use assert debugging function, "OPENSSL_DEBUG" should be enabled.

Available options:

- Do nothing (OPENSSL_ASSERT_DO_NOTHING)

  Do nothing and "SSL_ASSERT" does not work.

- Check and exit (OPENSSL_ASSERT_EXIT)

  Enable assert exiting, it will check and return error code.

- Show debugging message (OPENSSL_ASSERT_DEBUG)

  Enable assert debugging, it will check and show debugging message.

- Show debugging message and exit (OPENSSL_ASSERT_DEBUG_EXIT)

  Enable assert debugging and exiting, it will check, show debugging message and return error code.

- Show debugging message and block (OPENSSL_ASSERT_DEBUG_BLOCK)

  Enable assert debugging and blocking, it will check, show debugging message and block by "while (1);" .

PThreads

Contains:

- *CONFIG_ESP32_PTHREAD_TASK_PRIO_DEFAULT*
- *CONFIG_ESP32_PTHREAD_TASK_STACK_SIZE_DEFAULT*
- *CONFIG_PTHREAD_STACK_MIN*

- *CONFIG_ESP32_PTHREAD_TASK_CORE_DEFAULT*
- *CONFIG_ESP32_PTHREAD_TASK_NAME_DEFAULT*

CONFIG_ESP32_PTHREAD_TASK_PRIO_DEFAULT

Default task priority

Found in: Component config > PThreads

Priority used to create new tasks with default pthread parameters.

CONFIG_ESP32_PTHREAD_TASK_STACK_SIZE_DEFAULT

Default task stack size

Found in: Component config > PThreads

Stack size used to create new tasks with default pthread parameters.

CONFIG_PTHREAD_STACK_MIN

Minimum allowed pthread stack size

Found in: Component config > PThreads

Minimum allowed pthread stack size set in attributes passed to pthread_create

CONFIG_ESP32_PTHREAD_TASK_CORE_DEFAULT

Default pthread core affinity

Found in: Component config > PThreads

The default core to which pthreads are pinned.

Available options:

- No affinity (ESP32_DEFAULT_PTHREAD_CORE_NO_AFFINITY)
- Core 0 (ESP32_DEFAULT_PTHREAD_CORE_0)
- Core 1 (ESP32_DEFAULT_PTHREAD_CORE_1)

CONFIG_ESP32_PTHREAD_TASK_NAME_DEFAULT

Default name of pthreads

Found in: Component config > PThreads

The default name of pthreads.

SPI Flash driver

Contains:

- *CONFIG_SPI_FLASH_VERIFY_WRITE*
- *CONFIG_SPI_FLASH_ENABLE_COUNTERS*
- *CONFIG_SPI_FLASH_ROM_DRIVER_PATCH*
- *CONFIG_SPI_FLASH_WRITING_DANGEROUS_REGIONS*
- *CONFIG_SPI_FLASH_YIELD_DURING_ERASE*

CONFIG_SPI_FLASH_VERIFY_WRITE

Verify SPI flash writes

Found in: Component config > SPI Flash driver

If this option is enabled, any time SPI flash is written then the data will be read back and verified. This can catch hardware problems with SPI flash, or flash which was not erased before verification.

CONFIG_SPI_FLASH_LOG_FAILED_WRITE

Log errors if verification fails

Found in: Component config > SPI Flash driver > CONFIG_SPI_FLASH_VERIFY_WRITE

If this option is enabled, if SPI flash write verification fails then a log error line will be written with the address, expected & actual values. This can be useful when debugging hardware SPI flash problems.

CONFIG_SPI_FLASH_WARN_SETTING_ZERO_TO_ONE

Log warning if writing zero bits to ones

Found in: Component config > SPI Flash driver > CONFIG_SPI_FLASH_VERIFY_WRITE

If this option is enabled, any SPI flash write which tries to set zero bits in the flash to ones will log a warning. Such writes will not result in the requested data appearing identically in flash once written, as SPI NOR flash can only set bits to one when an entire sector is erased. After erasing, individual bits can only be written from one to zero.

Note that some software (such as SPIFFS) which is aware of SPI NOR flash may write one bits as an optimisation, relying on the data in flash becoming a bitwise AND of the new data and any existing data. Such software will log spurious warnings if this option is enabled.

CONFIG_SPI_FLASH_ENABLE_COUNTERS

Enable operation counters

Found in: Component config > SPI Flash driver

This option enables the following APIs:

- spi_flash_reset_counters
- spi_flash_dump_counters
- spi_flash_get_counters

These APIs may be used to collect performance data for spi_flash APIs and to help understand behaviour of libraries which use SPI flash.

CONFIG_SPI_FLASH_ROM_DRIVER_PATCH

Enable SPI flash ROM driver patched functions

Found in: Component config > SPI Flash driver

Enable this flag to use patched versions of SPI flash ROM driver functions. This option is needed to write to flash on ESP32-D2WD, and any configuration where external SPI flash is connected to non-default pins.

CONFIG_SPI_FLASH_WRITING_DANGEROUS_REGIONS

Writing to dangerous flash regions

Found in: Component config > SPI Flash driver

SPI flash APIs can optionally abort or return a failure code if erasing or writing addresses that fall at the beginning of flash (covering the bootloader and partition table) or that overlap the app partition that contains the running app.

It is not recommended to ever write to these regions from an IDF app, and this check prevents logic errors or corrupted firmware memory from damaging these regions.

Note that this feature *does not* check calls to the esp_rom_xxx SPI flash ROM functions. These functions should not be called directly from IDF applications.

Available options:

- Aborts (SPI_FLASH_WRITING_DANGEROUS_REGIONS_ABORTS)
- Fails (SPI_FLASH_WRITING_DANGEROUS_REGIONS_FAILS)
- Allowed (SPI_FLASH_WRITING_DANGEROUS_REGIONS_ALLOWED)

CONFIG_SPI_FLASH_YIELD_DURING_ERASE

Enables yield operation during flash erase

Found in: Component config > SPI Flash driver

This allows to yield the CPUs between erase commands. Prevents starvation of other tasks.

CONFIG_SPI_FLASH_ERASE_YIELD_DURATION_MS

Duration of erasing to yield CPUs (ms)

Found in: Component config > SPI Flash driver > CONFIG_SPI_FLASH_YIELD_DURING_ERASE

If a duration of one erase command is large then it will yield CPUs after finishing a current command.

CONFIG_SPI_FLASH_ERASE_YIELD_TICKS

CPU release time (tick)

Found in: Component config > SPI Flash driver > CONFIG_SPI_FLASH_YIELD_DURING_ERASE

Defines how many ticks will be before returning to continue a erasing.

SPIFFS Configuration

Contains:

- *CONFIG_SPIFFS_MAX_PARTITIONS*
- *SPIFFS Cache Configuration*
- *CONFIG_SPIFFS_PAGE_CHECK*
- *CONFIG_SPIFFS_GC_MAX_RUNS*
- *CONFIG_SPIFFS_GC_STATS*
- *CONFIG_SPIFFS_PAGE_SIZE*
- *CONFIG_SPIFFS_OBJ_NAME_LEN*

- *CONFIG_SPIFFS_USE_MAGIC*
- *CONFIG_SPIFFS_META_LENGTH*
- *CONFIG_SPIFFS_USE_MTIME*
- *Debug Configuration*

CONFIG_SPIFFS_MAX_PARTITIONS

Maximum Number of Partitions

Found in: Component config > SPIFFS Configuration

Define maximum number of partitions that can be mounted.

SPIFFS Cache Configuration

Contains:

- *CONFIG_SPIFFS_CACHE*

CONFIG_SPIFFS_CACHE

Enable SPIFFS Cache

Found in: Component config > SPIFFS Configuration > SPIFFS Cache Configuration

Enables/disable memory read caching of nucleus file system operations.

CONFIG_SPIFFS_CACHE_WR

Enable SPIFFS Write Caching

Found in: Component config > SPIFFS Configuration > SPIFFS Cache Configuration > CONFIG_SPIFFS_CACHE

Enables memory write caching for file descriptors in hydrogen.

CONFIG_SPIFFS_CACHE_STATS

Enable SPIFFS Cache Statistics

Found in: Component config > SPIFFS Configuration > SPIFFS Cache Configuration > CONFIG_SPIFFS_CACHE

Enable/disable statistics on caching. Debug/test purpose only.

CONFIG_SPIFFS_PAGE_CHECK

Enable SPIFFS Page Check

Found in: Component config > SPIFFS Configuration

Always check header of each accessed page to ensure consistent state. If enabled it will increase number of reads from flash, especially if cache is disabled.

CONFIG_SPIFFS_GC_MAX_RUNS

Set Maximum GC Runs

Found in: Component config > SPIFFS Configuration

Define maximum number of GC runs to perform to reach desired free pages.

CONFIG_SPIFFS_GC_STATS

Enable SPIFFS GC Statistics

Found in: Component config > SPIFFS Configuration

Enable/disable statistics on gc. Debug/test purpose only.

CONFIG_SPIFFS_PAGE_SIZE

SPIFFS logical page size

Found in: Component config > SPIFFS Configuration

Logical page size of SPIFFS partition, in bytes. Must be multiple of flash page size (which is usually 256 bytes). Larger page sizes reduce overhead when storing large files, and improve filesystem performance when reading large files. Smaller page sizes reduce overhead when storing small (< page size) files.

CONFIG_SPIFFS_OBJ_NAME_LEN

Set SPIFFS Maximum Name Length

Found in: Component config > SPIFFS Configuration

Object name maximum length. Note that this length include the zero-termination character, meaning maximum string of characters can at most be SPIFFS_OBJ_NAME_LEN - 1.

SPIFFS_OBJ_NAME_LEN + SPIFFS_META_LENGTH should not exceed SPIFFS_PAGE_SIZE - 64.

CONFIG_SPIFFS_USE_MAGIC

Enable SPIFFS Filesystem Magic

Found in: Component config > SPIFFS Configuration

Enable this to have an identifiable spiffs filesystem. This will look for a magic in all sectors to determine if this is a valid spiffs system or not at mount time.

CONFIG_SPIFFS_USE_MAGIC_LENGTH

Enable SPIFFS Filesystem Length Magic

Found in: Component config > SPIFFS Configuration > CONFIG_SPIFFS_USE_MAGIC

If this option is enabled, the magic will also be dependent on the length of the filesystem. For example, a filesystem configured and formatted for 4 megabytes will not be accepted for mounting with a configuration defining the filesystem as 2 megabytes.

CONFIG_SPIFFS_META_LENGTH

Size of per-file metadata field

Found in: Component config > SPIFFS Configuration

This option sets the number of extra bytes stored in the file header. These bytes can be used in an application-specific manner. Set this to at least 4 bytes to enable support for saving file modification time.

SPIFFS_OBJ_NAME_LEN + SPIFFS_META_LENGTH should not exceed SPIFFS_PAGE_SIZE - 64.

CONFIG_SPIFFS_USE_MTIME

Save file modification time

Found in: Component config > SPIFFS Configuration

If enabled, then the first 4 bytes of per-file metadata will be used to store file modification time (mtime), accessible through stat/fstat functions. Modification time is updated when the file is opened.

Debug Configuration

Contains:

- *CONFIG_SPIFFS_DBG*
- *CONFIG_SPIFFS_API_DBG*
- *CONFIG_SPIFFS_GC_DBG*
- *CONFIG_SPIFFS_CACHE_DBG*
- *CONFIG_SPIFFS_CHECK_DBG*
- *CONFIG_SPIFFS_TEST_VISUALISATION*

CONFIG_SPIFFS_DBG

Enable general SPIFFS debug

Found in: Component config > SPIFFS Configuration > Debug Configuration

Enabling this option will print general debug mesages to the console.

CONFIG_SPIFFS_API_DBG

Enable SPIFFS API debug

Found in: Component config > SPIFFS Configuration > Debug Configuration

Enabling this option will print API debug mesages to the console.

CONFIG_SPIFFS_GC_DBG

Enable SPIFFS Garbage Cleaner debug

Found in: Component config > SPIFFS Configuration > Debug Configuration

Enabling this option will print GC debug mesages to the console.

CONFIG_SPIFFS_CACHE_DBG

Enable SPIFFS Cache debug

Found in: Component config > SPIFFS Configuration > Debug Configuration

Enabling this option will print cache debug mesages to the console.

CONFIG_SPIFFS_CHECK_DBG

Enable SPIFFS Filesystem Check debug

Found in: Component config > SPIFFS Configuration > Debug Configuration

Enabling this option will print Filesystem Check debug mesages to the console.

CONFIG_SPIFFS_TEST_VISUALISATION

Enable SPIFFS Filesystem Visualization

Found in: Component config > SPIFFS Configuration > Debug Configuration

Enable this option to enable SPIFFS_vis function in the API.

TCP/IP Adapter

Contains:

- *CONFIG_IP_LOST_TIMER_INTERVAL*
- *CONFIG_USE_TCPIP_STACK_LIB*

CONFIG_IP_LOST_TIMER_INTERVAL

IP Address lost timer interval (seconds)

Found in: Component config > TCP/IP Adapter

The value of 0 indicates the IP lost timer is disabled, otherwise the timer is enabled.

The IP address may be lost because of some reasons, e.g. when the station disconnects from soft-AP, or when DHCP IP renew fails etc. If the IP lost timer is enabled, it will be started everytime the IP is lost. Event SYSTEM_EVENT_STA_LOST_IP will be raised if the timer expires. The IP lost timer is stopped if the station get the IP again before the timer expires.

CONFIG_USE_TCPIP_STACK_LIB

TCP/IP Stack Library

Found in: Component config > TCP/IP Adapter

Choose the TCP/IP Stack to work, for example, LwIP, uIP, etc.

Available options:

- LwIP (TCPIP_LWIP)

  lwIP is a small independent implementation of the TCP/IP protocol suite.

Unity unit testing library

Contains:

- *CONFIG_UNITY_ENABLE_FLOAT*
- *CONFIG_UNITY_ENABLE_DOUBLE*
- *CONFIG_UNITY_ENABLE_COLOR*
- *CONFIG_UNITY_ENABLE_IDF_TEST_RUNNER*
- *CONFIG_UNITY_ENABLE_FIXTURE*
- *CONFIG_UNITY_ENABLE_BACKTRACE_ON_FAIL*

CONFIG_UNITY_ENABLE_FLOAT

Support for float type

Found in: Component config > Unity unit testing library

If not set, assertions on float arguments will not be available.

CONFIG_UNITY_ENABLE_DOUBLE

Support for double type

Found in: Component config > Unity unit testing library

If not set, assertions on double arguments will not be available.

CONFIG_UNITY_ENABLE_COLOR

Colorize test output

Found in: Component config > Unity unit testing library

If set, Unity will colorize test results using console escape sequences.

CONFIG_UNITY_ENABLE_IDF_TEST_RUNNER

Include ESP-IDF test registration/running helpers

Found in: Component config > Unity unit testing library

If set, then the following features will be available:

- TEST_CASE macro which performs automatic registration of test functions

- Functions to run registered test functions: unity_run_all_tests, unity_run_tests_with_filter, unity_run_single_test_by_name.
- Interactive menu which lists test cases and allows choosing the tests to be run, available via unity_run_menu function.

Disable if a different test registration mechanism is used.

CONFIG_UNITY_ENABLE_FIXTURE

Include Unity test fixture

Found in: Component config > Unity unit testing library

If set, unity_fixture.h header file and associated source files are part of the build. These provide an optional set of macros and functions to implement test groups.

CONFIG_UNITY_ENABLE_BACKTRACE_ON_FAIL

Print a backtrace when a unit test fails

Found in: Component config > Unity unit testing library

If set, the unity framework will print the backtrace information before jumping back to the test menu. The jumping is usually occurs in assert functions such as TEST_ASSERT, TEST_FAIL etc.

Virtual file system

Contains:

- *CONFIG_SUPPRESS_SELECT_DEBUG_OUTPUT*
- *CONFIG_SUPPORT_TERMIOS*

CONFIG_SUPPRESS_SELECT_DEBUG_OUTPUT

Suppress select() related debug outputs

Found in: Component config > Virtual file system

Select() related functions might produce an unconveniently lot of debug outputs when one sets the default log level to DEBUG or higher. It is possible to suppress these debug outputs by enabling this option.

CONFIG_SUPPORT_TERMIOS

Add support for termios.h

Found in: Component config > Virtual file system

Disabling this option can save memory when the support for termios.h is not required.

Wear Levelling

Contains:

- *CONFIG_WL_SECTOR_SIZE*
- *CONFIG_WL_SECTOR_MODE*

CONFIG_WL_SECTOR_SIZE

Wear Levelling library sector size

Found in: Component config > Wear Levelling

Sector size used by wear levelling library. You can set default sector size or size that will fit to the flash device sector size.

With sector size set to 4096 bytes, wear levelling library is more efficient. However if FAT filesystem is used on top of wear levelling library, it will need more temporary storage: 4096 bytes for each mounted filesystem and 4096 bytes for each opened file.

With sector size set to 512 bytes, wear levelling library will perform more operations with flash memory, but less RAM will be used by FAT filesystem library (512 bytes for the filesystem and 512 bytes for each file opened).

Available options:

- 512 (WL_SECTOR_SIZE_512)
- 4096 (WL_SECTOR_SIZE_4096)

CONFIG_WL_SECTOR_MODE

Sector store mode

Found in: Component config > Wear Levelling

Specify the mode to store data into flash:

- In Performance mode a data will be stored to the RAM and then stored back to the flash. Compared to the Safety mode, this operation is faster, but if power will be lost when erase sector operation is in progress, then the data from complete flash device sector will be lost.
- In Safety mode data from complete flash device sector will be read from flash, modified, and then stored back to flash. Compared to the Performance mode, this operation is slower, but if power is lost during erase sector operation, then the data from full flash device sector will not be lost.

Available options:

- Perfomance (WL_SECTOR_MODE_PERF)
- Safety (WL_SECTOR_MODE_SAFE)

Wi-Fi Provisioning Manager

Contains:

- *CONFIG_WIFI_PROV_SCAN_MAX_ENTRIES*

CONFIG_WIFI_PROV_SCAN_MAX_ENTRIES

Max Wi-Fi Scan Result Entries

Found in: Component config > Wi-Fi Provisioning Manager

This sets the maximum number of entries of Wi-Fi scan results that will be kept by the provisioning manager

Supplicant

Contains:

- *CONFIG_WPA_WPS_WARS*
- *CONFIG_WPA_DEBUG_PRINT*

CONFIG_WPA_WPS_WARS

Enable WPS Inter operatability Fixes

Found in: Component config > Supplicant

Select this option to enable WPS related IOT fixes with different APs. This option fixes IOT related issues with APs which do not follow some of the standard of WPS-2.0 specification. However these do not include any of the security related bypassing, just simple configuration

corrections. Current fixes under this flag: 1. Allow NULL-padded WPS attributes: Some APs keep NULL-padding at the end of some variable length WPS Attributes. This is not as par the WPS2.0 specs, but to avoid interop issues, ignore the padding by reducing the attribute length by 1. 2. Bypass WPS-Config method validation: Some APs set display/pbc button bit without setting virtual/phycial display/button bit which will cause M2 validation fail, bypassing WPS-Config method validation.

CONFIG_WPA_DEBUG_PRINT

Print debug messages from WPA Supplicant

Found in: Component config > Supplicant

Select this option to print logging information from WPA supplicant, this includes handshake information and key hex dumps depending on the project logging level.

Enabling this could increase the build size ~60kb depending on the project logging level.

3.8.4 Customisations

Because IDF builds by default with 警告未定义的变量, when the Kconfig tool generates Makefiles (the `auto.conf` file) its behaviour has been customised. In normal Kconfig, a variable which is set to "no" is undefined. In IDF's version of Kconfig, this variable is defined in the Makefile but has an empty value.

(Note that `ifdef` and `ifndef` can still be used in Makefiles, because they test if a variable is defined *and has a non-empty value*.)

When generating header files for C & C++, the behaviour is not customised - so `#ifdef` can be used to test if a boolean config item is set or not.

3.9 Error Codes Reference

This section lists various error code constants defined in ESP-IDF.

For general information about error codes in ESP-IDF, see *Error Handling*.

ESP_FAIL (-1): Generic esp_err_t code indicating failure

ESP_OK (0): esp_err_t value indicating success (no error)

ESP_ERR_NO_MEM **(0x101)**: Out of memory

ESP_ERR_INVALID_ARG **(0x102)**: Invalid argument

ESP_ERR_INVALID_STATE **(0x103)**: Invalid state

ESP_ERR_INVALID_SIZE **(0x104)**: Invalid size

ESP_ERR_NOT_FOUND **(0x105)**: Requested resource not found

ESP_ERR_NOT_SUPPORTED **(0x106)**: Operation or feature not supported

ESP_ERR_TIMEOUT **(0x107)**: Operation timed out

ESP_ERR_INVALID_RESPONSE **(0x108)**: Received response was invalid

ESP_ERR_INVALID_CRC **(0x109)**: CRC or checksum was invalid

ESP_ERR_INVALID_VERSION **(0x10a)**: Version was invalid

ESP_ERR_INVALID_MAC **(0x10b)**: MAC address was invalid

ESP_ERR_NVS_BASE **(0x1100)**: Starting number of error codes

ESP_ERR_NVS_NOT_INITIALIZED **(0x1101)**: The storage driver is not initialized

ESP_ERR_NVS_NOT_FOUND **(0x1102)**: Id namespace doesn’ t exist yet and mode is NVS_READONLY

ESP_ERR_NVS_TYPE_MISMATCH **(0x1103)**: The type of set or get operation doesn’ t match the type of value stored in NVS

ESP_ERR_NVS_READ_ONLY **(0x1104)**: Storage handle was opened as read only

ESP_ERR_NVS_NOT_ENOUGH_SPACE **(0x1105)**: There is not enough space in the underlying storage to save the value

ESP_ERR_NVS_INVALID_NAME **(0x1106)**: Namespace name doesn’ t satisfy constraints

ESP_ERR_NVS_INVALID_HANDLE **(0x1107)**: Handle has been closed or is NULL

ESP_ERR_NVS_REMOVE_FAILED **(0x1108)**: The value wasn’ t updated because flash write operation has failed. The value was written however, and update will be finished after re-initialization of nvs, provided that flash operation doesn’ t fail again.

ESP_ERR_NVS_KEY_TOO_LONG **(0x1109)**: Key name is too long

ESP_ERR_NVS_PAGE_FULL **(0x110a)**: Internal error; never returned by nvs API functions

ESP_ERR_NVS_INVALID_STATE **(0x110b)**: NVS is in an inconsistent state due to a previous error. Call nvs_flash_init and nvs_open again, then retry.

ESP_ERR_NVS_INVALID_LENGTH **(0x110c)**: String or blob length is not sufficient to store data

ESP_ERR_NVS_NO_FREE_PAGES **(0x110d)**: NVS partition doesn’ t contain any empty pages. This may happen if NVS partition was truncated. Erase the whole partition and call nvs_flash_init again.

ESP_ERR_NVS_VALUE_TOO_LONG **(0x110e)**: String or blob length is longer than supported by the implementation

ESP_ERR_NVS_PART_NOT_FOUND **(0x110f)**: Partition with specified name is not found in the partition table

ESP_ERR_NVS_NEW_VERSION_FOUND **(0x1110)**: NVS partition contains data in new format and cannot be recognized by this version of code

ESP_ERR_NVS_XTS_ENCR_FAILED **(0x1111)**: XTS encryption failed while writing NVS entry

ESP_ERR_NVS_XTS_DECR_FAILED **(0x1112)**: XTS decryption failed while reading NVS entry

ESP_ERR_NVS_XTS_CFG_FAILED **(0x1113)**: XTS configuration setting failed

ESP_ERR_NVS_XTS_CFG_NOT_FOUND **(0x1114)**: XTS configuration not found

ESP_ERR_NVS_ENCR_NOT_SUPPORTED **(0x1115)**: NVS encryption is not supported in this version

ESP_ERR_NVS_KEYS_NOT_INITIALIZED **(0x1116)**: NVS key partition is uninitialized

ESP_ERR_NVS_CORRUPT_KEY_PART **(0x1117)**: NVS key partition is corrupt

ESP_ERR_ULP_BASE **(0x1200)**: Offset for ULP-related error codes

ESP_ERR_ULP_SIZE_TOO_BIG **(0x1201)**: Program doesn’ t fit into RTC memory reserved for the ULP

ESP_ERR_ULP_INVALID_LOAD_ADDR **(0x1202)**: Load address is outside of RTC memory reserved for the ULP

ESP_ERR_ULP_DUPLICATE_LABEL **(0x1203)**: More than one label with the same number was defined

ESP_ERR_ULP_UNDEFINED_LABEL **(0x1204)**: Branch instructions references an undefined label

ESP_ERR_ULP_BRANCH_OUT_OF_RANGE **(0x1205)**: Branch target is out of range of B instruction (try replacing with BX)

ESP_ERR_OTA_BASE **(0x1500)**: Base error code for ota_ops api

ESP_ERR_OTA_PARTITION_CONFLICT **(0x1501)**: Error if request was to write or erase the current running partition

ESP_ERR_OTA_SELECT_INFO_INVALID **(0x1502)**: Error if OTA data partition contains invalid content

ESP_ERR_OTA_VALIDATE_FAILED **(0x1503)**: Error if OTA app image is invalid

ESP_ERR_OTA_SMALL_SEC_VER **(0x1504)**: Error if the firmware has a secure version less than the running firmware.

ESP_ERR_OTA_ROLLBACK_FAILED **(0x1505)**: Error if flash does not have valid firmware in passive partition and hence rollback is not possible

ESP_ERR_OTA_ROLLBACK_INVALID_STATE **(0x1506)**: Error if current active firmware is still marked in pending validation state (ESP_OTA_IMG_PENDING_VERIFY), essentially first boot of firmware image post upgrade and hence firmware upgrade is not possible

ESP_ERR_EFUSE **(0x1600)**: Base error code for efuse api.

ESP_OK_EFUSE_CNT **(0x1601)**: OK the required number of bits is set.

ESP_ERR_EFUSE_CNT_IS_FULL **(0x1602)**: Error field is full.

ESP_ERR_EFUSE_REPEATED_PROG **(0x1603)**: Error repeated programming of programmed bits is strictly forbidden.

ESP_ERR_CODING **(0x1604)**: Error while a encoding operation.

ESP_ERR_IMAGE_BASE (**0x2000**)

ESP_ERR_IMAGE_FLASH_FAIL (**0x2001**)

ESP_ERR_IMAGE_INVALID (**0x2002**)

ESP_ERR_WIFI_BASE (**0x3000**): Starting number of WiFi error codes

ESP_ERR_WIFI_NOT_INIT (**0x3001**): WiFi driver was not installed by esp_wifi_init

ESP_ERR_WIFI_NOT_STARTED (**0x3002**): WiFi driver was not started by esp_wifi_start

ESP_ERR_WIFI_NOT_STOPPED (**0x3003**): WiFi driver was not stopped by esp_wifi_stop

ESP_ERR_WIFI_IF (**0x3004**): WiFi interface error

ESP_ERR_WIFI_MODE (**0x3005**): WiFi mode error

ESP_ERR_WIFI_STATE (**0x3006**): WiFi internal state error

ESP_ERR_WIFI_CONN (**0x3007**): WiFi internal control block of station or soft-AP error

ESP_ERR_WIFI_NVS (**0x3008**): WiFi internal NVS module error

ESP_ERR_WIFI_MAC (**0x3009**): MAC address is invalid

ESP_ERR_WIFI_SSID (**0x300a**): SSID is invalid

ESP_ERR_WIFI_PASSWORD (**0x300b**): Password is invalid

ESP_ERR_WIFI_TIMEOUT (**0x300c**): Timeout error

ESP_ERR_WIFI_WAKE_FAIL (**0x300d**): WiFi is in sleep state(RF closed) and wakeup fail

ESP_ERR_WIFI_WOULD_BLOCK (**0x300e**): The caller would block

ESP_ERR_WIFI_NOT_CONNECT (**0x300f**): Station still in disconnect status

ESP_ERR_WIFI_POST (**0x3012**): Failed to post the event to WiFi task

ESP_ERR_WIFI_INIT_STATE (**0x3013**): Invalid WiFi state when init/deinit is called

ESP_ERR_WIFI_STOP_STATE (**0x3014**): Returned when WiFi is stopping

ESP_ERR_WIFI_REGISTRAR (**0x3033**): WPS registrar is not supported

ESP_ERR_WIFI_WPS_TYPE (**0x3034**): WPS type error

ESP_ERR_WIFI_WPS_SM (**0x3035**): WPS state machine is not initialized

ESP_ERR_ESPNOW_BASE (**0x3064**): ESPNOW error number base.

ESP_ERR_ESPNOW_NOT_INIT (**0x3065**): ESPNOW is not initialized.

ESP_ERR_ESPNOW_ARG (**0x3066**): Invalid argument

ESP_ERR_ESPNOW_NO_MEM (**0x3067**): Out of memory

ESP_ERR_ESPNOW_FULL (**0x3068**): ESPNOW peer list is full

ESP_ERR_ESPNOW_NOT_FOUND (**0x3069**): ESPNOW peer is not found

ESP_ERR_ESPNOW_INTERNAL (**0x306a**): Internal error

ESP_ERR_ESPNOW_EXIST (**0x306b**): ESPNOW peer has existed

ESP_ERR_ESPNOW_IF (**0x306c**): Interface error

ESP_ERR_MESH_BASE (**0x4000**): Starting number of MESH error codes

ESP_ERR_MESH_WIFI_NOT_START (**0x4001**)

ESP_ERR_MESH_NOT_INIT (**0x4002**)

ESP_ERR_MESH_NOT_CONFIG (**0x4003**)

ESP_ERR_MESH_NOT_START (**0x4004**)

ESP_ERR_MESH_NOT_SUPPORT (**0x4005**)

ESP_ERR_MESH_NOT_ALLOWED (**0x4006**)

ESP_ERR_MESH_NO_MEMORY (**0x4007**)

ESP_ERR_MESH_ARGUMENT (**0x4008**)

ESP_ERR_MESH_EXCEED_MTU (**0x4009**)

ESP_ERR_MESH_TIMEOUT (**0x400a**)

ESP_ERR_MESH_DISCONNECTED (**0x400b**)

ESP_ERR_MESH_QUEUE_FAIL (**0x400c**)

ESP_ERR_MESH_QUEUE_FULL (**0x400d**)

ESP_ERR_MESH_NO_PARENT_FOUND (**0x400e**)

ESP_ERR_MESH_NO_ROUTE_FOUND (**0x400f**)

ESP_ERR_MESH_OPTION_NULL (**0x4010**)

ESP_ERR_MESH_OPTION_UNKNOWN (**0x4011**)

ESP_ERR_MESH_XON_NO_WINDOW (**0x4012**)

ESP_ERR_MESH_INTERFACE (**0x4013**)

ESP_ERR_MESH_DISCARD_DUPLICATE (**0x4014**)

ESP_ERR_MESH_DISCARD (**0x4015**)

ESP_ERR_MESH_VOTING (**0x4016**)

ESP_ERR_MESH_XMIT (**0x4017**)

ESP_ERR_MESH_QUEUE_READ (**0x4018**)

ESP_ERR_MESH_RECV_RELEASE (**0x401a**)

ESP_ERR_TCPIP_ADAPTER_BASE (**0x5000**)

ESP_ERR_TCPIP_ADAPTER_INVALID_PARAMS (**0x5001**)

ESP_ERR_TCPIP_ADAPTER_IF_NOT_READY (**0x5002**)

ESP_ERR_TCPIP_ADAPTER_DHCPC_START_FAILED (**0x5003**)

ESP_ERR_TCPIP_ADAPTER_DHCP_ALREADY_STARTED (**0x5004**)

ESP_ERR_TCPIP_ADAPTER_DHCP_ALREADY_STOPPED (**0x5005**)

ESP_ERR_TCPIP_ADAPTER_NO_MEM (**0x5006**)

ESP_ERR_TCPIP_ADAPTER_DHCP_NOT_STOPPED (**0x5007**)

ESP_ERR_PING_BASE (**0x6000**)

ESP_ERR_PING_INVALID_PARAMS (**0x6001**)

ESP_ERR_PING_NO_MEM (**0x6002**)

ESP_ERR_HTTP_BASE (**0x7000**): Starting number of HTTP error codes

ESP_ERR_HTTP_MAX_REDIRECT (**0x7001**): The error exceeds the number of HTTP redirects

ESP_ERR_HTTP_CONNECT (**0x7002**): Error open the HTTP connection

ESP_ERR_HTTP_WRITE_DATA (**0x7003**): Error write HTTP data

ESP_ERR_HTTP_FETCH_HEADER (**0x7004**): Error read HTTP header from server

ESP_ERR_HTTP_INVALID_TRANSPORT (**0x7005**): There are no transport support for the input scheme

ESP_ERR_HTTP_CONNECTING (**0x7006**): HTTP connection hasn’ t been established yet

ESP_ERR_HTTP_EAGAIN (**0x7007**): Mapping of errno EAGAIN to esp_err_t

ESP_ERR_HTTPD_BASE (**0x8000**): Starting number of HTTPD error codes

ESP_ERR_HTTPD_HANDLERS_FULL (**0x8001**): All slots for registering URI handlers have been consumed

ESP_ERR_HTTPD_HANDLER_EXISTS (**0x8002**): URI handler with same method and target URI already registered

ESP_ERR_HTTPD_INVALID_REQ (**0x8003**): Invalid request pointer

ESP_ERR_HTTPD_RESULT_TRUNC (**0x8004**): Result string truncated

ESP_ERR_HTTPD_RESP_HDR (**0x8005**): Response header field larger than supported

ESP_ERR_HTTPD_RESP_SEND (**0x8006**): Error occured while sending response packet

ESP_ERR_HTTPD_ALLOC_MEM (**0x8007**): Failed to dynamically allocate memory for resource

ESP_ERR_HTTPD_TASK (**0x8008**): Failed to launch server task/thread

ESP_ERR_HTTPS_OTA_BASE (**0x9000**)

ESP_ERR_HTTPS_OTA_IN_PROGRESS (0x9001)

ESP_ERR_FLASH_BASE (0x10010)

ESP_ERR_FLASH_OP_FAIL (0x10011)

ESP_ERR_FLASH_OP_TIMEOUT (0x10012)

CHAPTER 4

ESP32 H/W 硬件参考

[English]

4.1 ESP32 Modules and Boards

Espressif designed and manufactured several development modules and boards to help users evaluate functionality of the ESP32 family of chips. Development boards, depending on intended functionality, have exposed GPIO pins headers, provide USB programming interface, JTAG interface as well as peripherals like touch pads, LCD screen, SD card slot, camera module header, etc.

For details please refer to documentation below, provided together with description of particular boards.

注解: This section describes the latest versions of boards. Previous versions of boards, including these not produced anymore, are described in section *Previous Versions of ESP32 Modules and Boards*.

4.1.1 WROOM, SOLO and WROVER Modules

A family of small modules that contain ESP32 chip on board together with some key components including a crystal oscillator and an antenna matching circuit. This makes it easier to provide an ESP32 based solution ready to integrate into final products. Such modules can be also used for evaluation after adding a few extra components like a programming interface, bootstrapping resistors and break out headers. The key

characteristics of these modules are summarized in the following table. Some additional details are covered in the following chapters.

–	Key Components			
Module	Chip	Flash	PSRAM	Ant.
ESP32-WROOM-32	ESP32-D0WDQ6	4MB	–	MIFA
ESP32-WROOM-32D	ESP32-D0WD	4MB	–	MIFA
ESP32-WROOM-32U	ESP32-D0WD	4MB	–	U.FL
ESP32-SOLO-1	ESP32-S0WD	4MB	–	MIFA
ESP32-WROVER	ESP32-D0WDQ6	4MB	8MB	MIFA
ESP32-WROVER-I	ESP32-D0WDQ6	4MB	8MB	U.FL
ESP32-WROVER-B	ESP32-D0WD	4MB	8MB	MIFA
ESP32-WROVER-IB	ESP32-D0WD	4MB	8MB	U.FL

- ESP32-**D**.. denotes dual core, ESP32-**S**.. denotes single core chip
- MIFA - Meandered Inverted-F Antenna
- U.FL - U.FL / IPEX antenna connector
- ESP32-WROOM-x and ESP32-WROVER-x modules are also available with custom flash sizes of 8MB or 16MB, see Espressif Products Ordering Information (PDF)
- ESP32 Chip Datasheet (PDF)
- Initial release of ESP32-WROVER module had 4MB of PSRAM
- *ESP32-WROOM-32* was previously called *ESP-WROOM-32*

ESP32-WROOM-32

A basic and commonly adopted ESP32 module with ESP32-D0WDQ6 chip on board. The first one of the WROOM / WROVER family released to the market. By default the module has 4MB flash and may be also ordered with custom flash size of 8 or 16MB, see Espressif Products Ordering Information.

Documentation

- ESP32-WROOM-32 Datasheet (PDF)
- ESP32-WROOM-32 Reference Design containing OrCAD schematic, PCB layout, gerbers and BOM

ESP32-WROOM-32D / ESP32-WROOM-32U

Both modules have ESP32-D0WD chip on board of a smaller footprint than ESP32-D0WDQ6 installed in *ESP32-WROOM-32*. By default the module has 4MB flash and may be also ordered with custom flash size

图 1: ESP32-WROOM-32 module (front and back)

of 8 or 16MB, see Espressif Products Ordering Information. Version "D" has a MIFA antenna. Version "U" has just an U.FL / IPEX antenna connector. That makes it 6.3 mm shorter comparing to "D" , and also the smallest representative of the whole WROOM / WROVER family of modules.

图 2: ESP32-WROOM-32D module (front and back)

Documentation

- ESP32-WROOM-32D / ESP32-WROOM-32U Datasheet (PDF)

ESP32-SOLO-1

Simplified version of ESP32-WROOM-32D module. It contains a single core ESP32 chip that supports clock frequency of up to 160 MHz.

Documentation

- ESP32-SOLO-1 Datasheet (PDF)

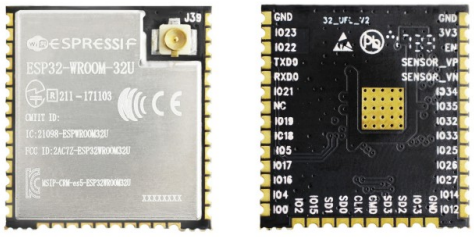

图 3: ESP32-WROOM-32U module (front and back)

图 4: ESP32-SOLO-1 module (front and back)

ESP32-WROVER

A step upgrade of ESP32-WROOM-32x modules with an additional 8MB SPI PSRAM (Pseudo static RAM).

The module comes in couple of versions listed in section *WROOM, SOLO and WROVER Modules*:

- **ESP32-WROVER** and **ESP32-WROVER-I** have PSRAM that operates at 1.8V and can support up to 144 MHz clock rate.
- **ESP32-WROVER-B** and **ESP32-WROVER-IB** have PSRAM that operates at 3.3V and can support up to 133 MHz clock rate.

By default the module has 4MB flash and may be also ordered with custom flash size of 8 or 16MB, see Espressif Products Ordering Information.

Depending on version the module has PCB antenna (shown below) or an U.FL / IPEX antenna connector. Because of additional components inside, this module is 5.9 mm longer than *ESP32-WROOM-32*.

Documentation

- ESP32-WROVER Datasheet (PDF)
- ESP-PSRAM64 & ESP-PSRAM64H Datasheet (PDF)

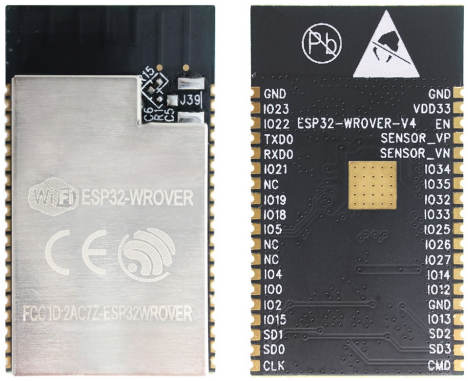

图 5: ESP32-WROVER module (front and back)

- ESP32-WROVER Reference Design containing OrCAD schematic, PCB layout, gerbers and BOM

4.1.2 ESP32-PICO-KIT V4.1

The smallest ESP32 development board with all the components required to connect it directly to a PC USB port, and pin headers to plug into a mini breadboard. It is equipped with ESP32-PICO-D4 module that integrates 4 MB flash memory, a crystal oscillator, filter capacitors and RF matching circuit in one single package. As result, the fully functional development board requires only a few external components that can easy fit on a 20 x 52 mm PCB including antenna, LDO, USB-UART bridge and two buttons to reset it and put into download mode.

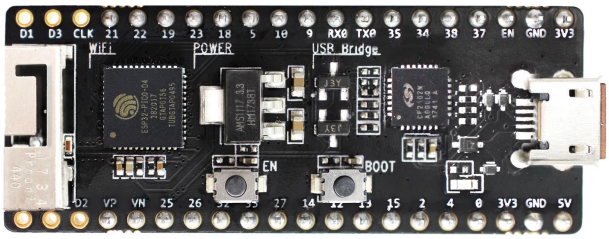

图 6: ESP32-PICO-KIT V4.1 board

Comparing to ESP32-PICO-KIT V4, this version contains a more capable CP2102N USB-UART bridge that provides up to 3 Mbps transfers rates.

Documentation

- *ESP32-PICO-KIT V4 入门指南*
- ESP32-PICO-KIT V4.1 Schematic (PDF)
- ESP32-PICO-KIT Reference Design containing OrCAD schematic, PCB layout, gerbers and BOM

- ESP32-PICO-D4 Datasheet (PDF)

Previous Versions

- *ESP32-PICO-KIT V4*
- *ESP32-PICO-KIT V3*

4.1.3 ESP32 DevKitC V4

Small and convenient development board with *ESP32-WROOM-32* module installed, break out pin headers and minimum additional components. Includes USB to serial programming interface, that also provides power supply for the board. Has pushbuttons to reset the board and put it in upload mode. Comparing to the previous *ESP32 Core Board V2 / ESP32 DevKitC*, instead of ESP32-WROOM-32 it can accommodate *ESP32-WROVER* module and has CP2102N chip that supports faster baud rates.

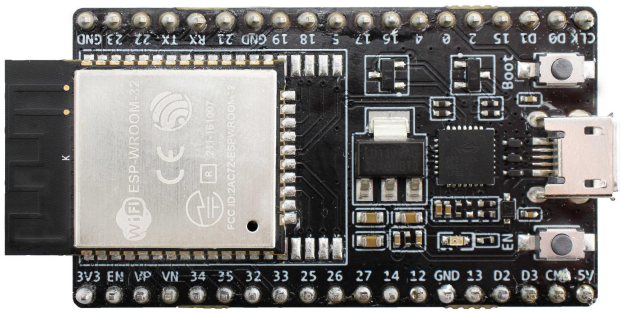

图 7: ESP32 DevKitC V4 board

Documentation

- *ESP32-DevKitC V4 入门指南*
- ESP32-DevKitC schematic (PDF)
- ESP32-DevKitC Reference Design containing OrCAD schematic, PCB layout, gerbers and BOM
- CP210x USB to UART Bridge VCP Drivers

Previous Versions

- *ESP32 Core Board V2 / ESP32 DevKitC*

4.1.4 ESP-WROVER-KIT V4.1

The ESP-WROVER-KIT V4.1 development board has dual port USB to serial converter for programming and JTAG interface for debugging. Power supply is provided by USB interface or from standard 5 mm power supply jack. Power supply selection is done with a jumper and may be put on/off with a separate switch. This board has MicroSD card slot, 3.2" SPI LCD screen and dedicated header to connect a camera. It provides RGB diode for diagnostics. Includes 32.768 kHz XTAL for internal RTC to operate it in low power modes.

This version of ESP-WROVER-KIT board has ESP-WROVER-B module installed that integrates 64-MBit PSRAM for flexible extended storage and data processing capabilities. The board can accommodate other versions of ESP modules described under *WROOM, SOLO and WROVER Modules*.

Comparing to *ESP-WROVER-KIT V3*, this board has the following design changes:

- JP8, JP11 and JP13 have been combined into a single JP2
- USB connector has been changed to DIP type and moved to the lower right corner of the board
- R61 has been changed to 0R
- Some other components, e.g. EN and Boot buttons, have been replaced with functional equivalents basing on test results and sourcing options

The board on picture above has ESP32-WROVER-B module is installed.

Documentation

- *ESP-WROVER-KIT V4.1 入门指南*
- ESP-WROVER-KIT V4.1 Schematic (PDF)
- *JTAG 调试*
- FTDI Virtual COM Port Drivers

Previous Versions

- *ESP-WROVER-KIT V3*
- *ESP-WROVER-KIT V2*
- *ESP-WROVER-KIT V1 / ESP32 DevKitJ V1*

4.1.5 Related Documents

- *Previous Versions of ESP32 Modules and Boards*

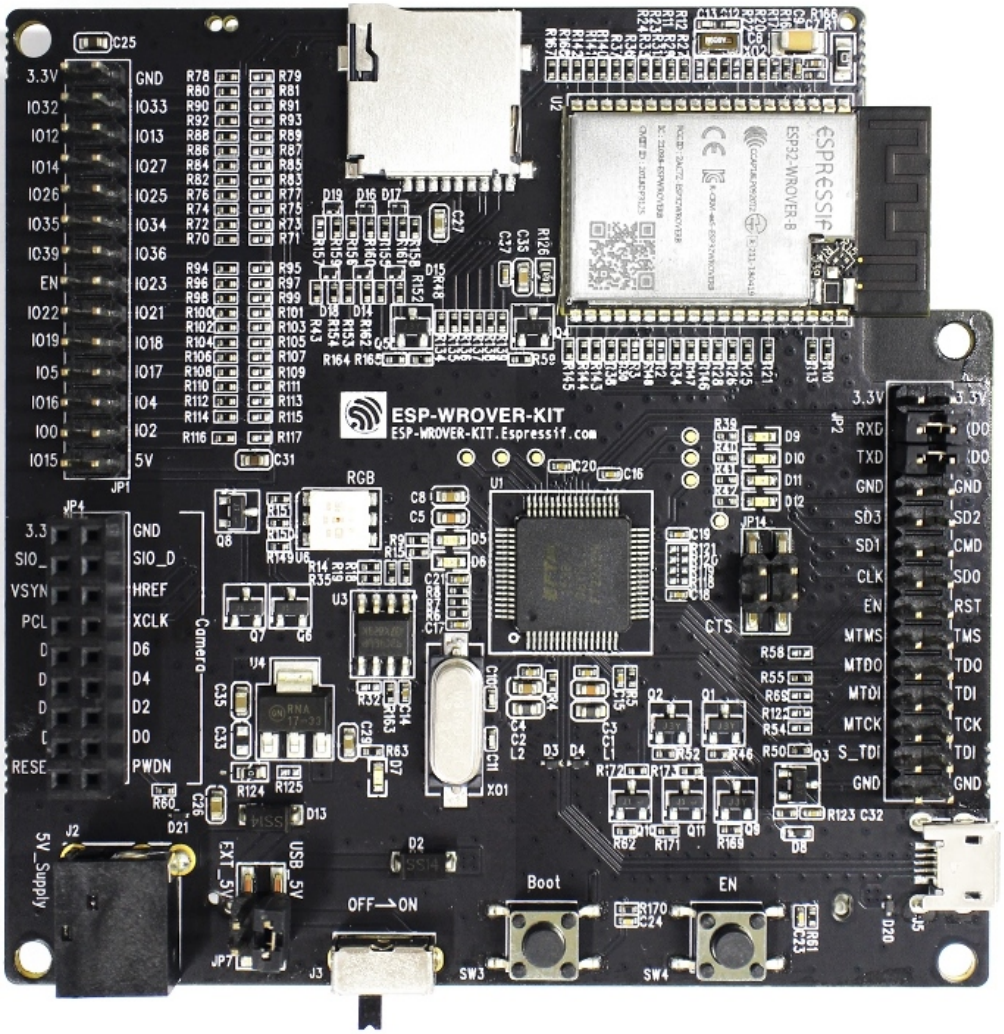

图 8: ESP-WROVER-KIT V4.1 board

4.2 Previous Versions of ESP32 Modules and Boards

This sections contains overview and links to documentation of previous version ESP32 Modules and Boards that have been replaced with newer versions or discontinued. It is maintained for convenience of users as several of these boards are still in use and some may still be available for purchase.

To see the latest development boards, please refer to section *ESP32 Modules and Boards*.

4.2.1 ESP32-PICO-KIT V4

The smallest ESP32 development board with all the components required to connect it directly to a PC USB port, and pin headers to plug into a mini breadboard. It is equipped with ESP32-PICO-D4 module that integrates 4 MB flash memory, a crystal oscillator, filter capacitors and RF matching circuit in one single package. As result, the fully functional development board requires only a few external components that can easy fit on a 20 x 52 mm PCB including antenna, LDO, USB-UART bridge and two buttons to reset it and put into download mode.

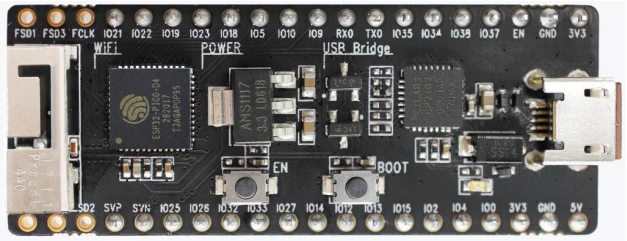

图 9: ESP32-PICO-KIT V4 board

Comparing to ESP32-PICO-KIT V3, this version has revised printout and reduced number of exposed pins. Instead of 20, only 17 header pins are populated, so V4 can fit into a mini breadboard.

Documentation

- *ESP32-PICO-KIT V4 入门指南*
- ESP32-PICO-KIT V4 Schematic (PDF)
- ESP32-PICO-D4 Datasheet (PDF)

4.2.2 ESP32-PICO-KIT V3

The first public release of Espressif' s ESP32-PICO-D4 module on a mini development board. The board has a USB port for programming and debugging and two rows of 20 pin headers to plug into a breadboard. The ESP32-PICO-D4 module itself is small and requires only a few external components. Besides two core CPUs it integrates 4MB flash memory, a crystal oscillator and antenna matching components in one single

7 x 7 mm package. As a result the module and all the components making the complete development board fit into 20 x 52 mm PCB.

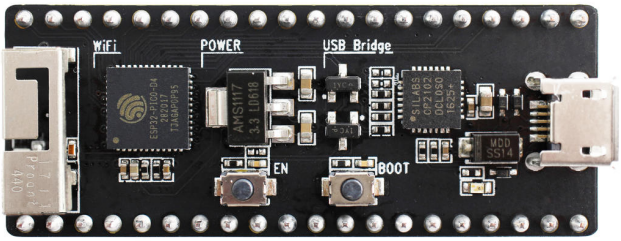

图 10: ESP32-PICO-KIT V3 board

Documentation

- *ESP32-PICO-KIT V3 Getting Started Guide*
- ESP32-PICO-KIT V3 Schematic (PDF)
- ESP32-PICO-D4 Datasheet (PDF)

4.2.3 ESP32 Core Board V2 / ESP32 DevKitC

Small and convenient development board with ESP-WROOM-32 module installed, break out pin headers and minimum additional components. Includes USB to serial programming interface, that also provides power supply for the board. Has pushbuttons to reset the board and put it in upload mode.

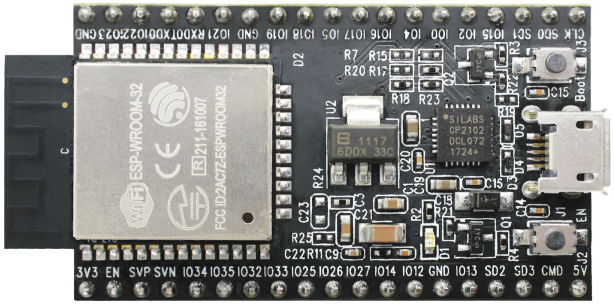

图 11: ESP32 Core Board V2 / ESP32 DevKitC board

Documentation

- *ESP32-DevKitC V2 Getting Started Guide*
- ESP32 DevKitC V2 Schematic (PDF)
- CP210x USB to UART Bridge VCP Drivers

4.2.4 ESP-WROVER-KIT V3

The ESP-WROVER-KIT V3 development board has dual port USB to serial converter for programming and JTAG interface for debugging. Power supply is provided by USB interface or from standard 5 mm power supply jack. Power supply selection is done with a jumper and may be put on/off with a separate switch. This board has MicroSD card slot, 3.2" SPI LCD screen and dedicated header to connect a camera. It provides RGB diode for diagnostics. Includes 32.768 kHz XTAL for internal RTC to operate it in low power modes.

As all previous versions of ESP-WROVER-KIT boards, it is ready to accommodate an *ESP32-WROOM-32* or *ESP32-WROVER* module.

This is the first release of ESP-WROVER-KIT shipped with *ESP32-WROVER* module installed by default. This release also introduced several design changes to conditioning and interlocking of signals to the bootstrapping pins. Also, a zero Ohm resistor (R166) has been added between WROVER/WROOM module and VDD33 net, which can be desoldered, or replaced with a shunt resistor, for current measurement. This is intended to facilitate power consumption analysis in various operation modes of ESP32. Refer to schematic - the changes are enclosed in green border.

The camera header has been changed from male back to female. The board soldermask is matte black. The board on picture above has *ESP32-WROVER* is installed.

Documentation

- *ESP-WROVER-KIT V3 Getting Started Guide*
- ESP-WROVER-KIT V3 Schematic (PDF)
- *JTAG 调试*
- FTDI Virtual COM Port Drivers

4.2.5 ESP-WROVER-KIT V2

This is updated version of ESP32 DevKitJ V1 described above with design improvements identified when DevKitJ was in use, e.g. improved support for SD card. By default board has ESP-WROOM-32 module installed.

Comparing to previous version, this board has a shiny black finish and a male camera header.

Documentation

- *ESP-WROVER-KIT V2 Getting Started Guide*
- ESP-WROVER-KIT V2 Schematic (PDF)
- *JTAG 调试*

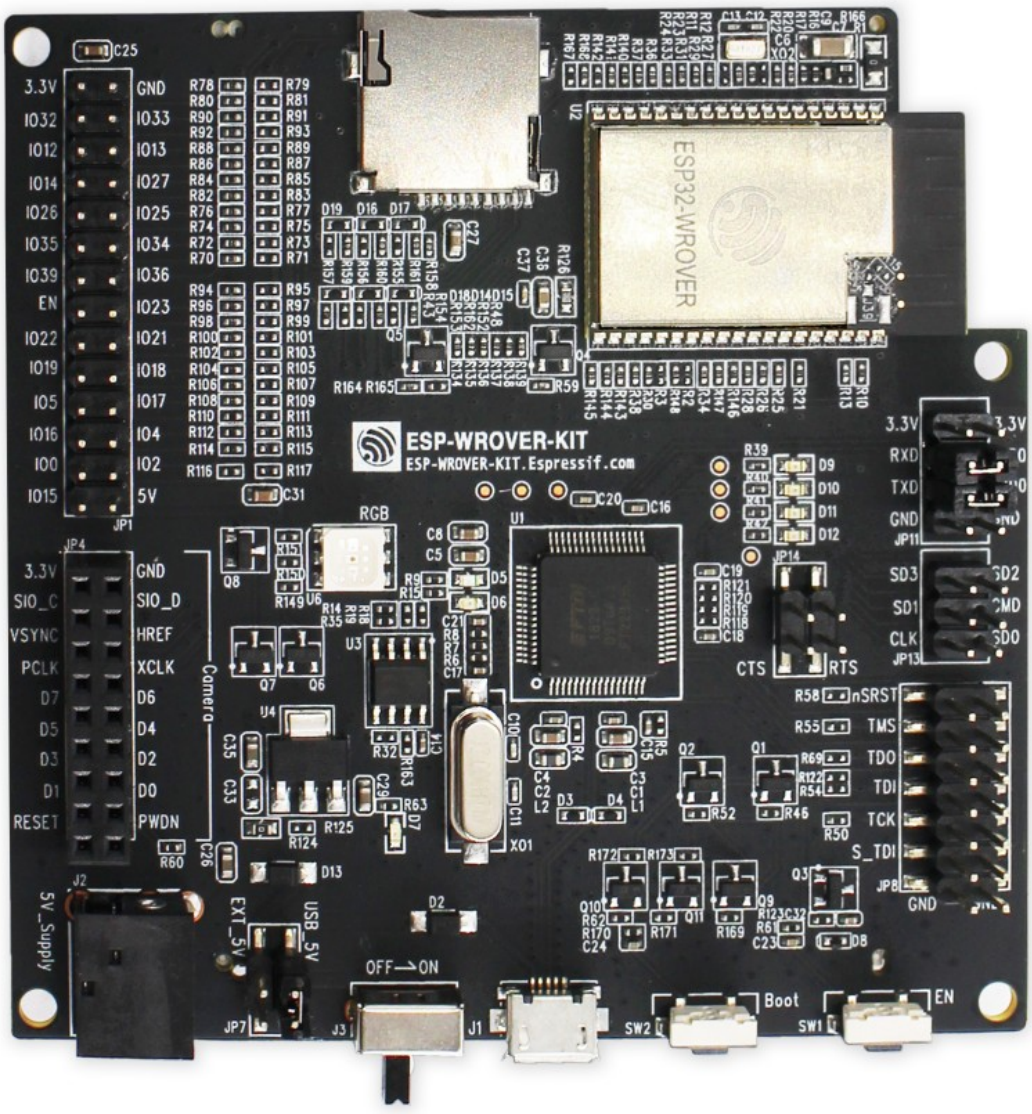

图 12: ESP-WROVER-KIT V3 board

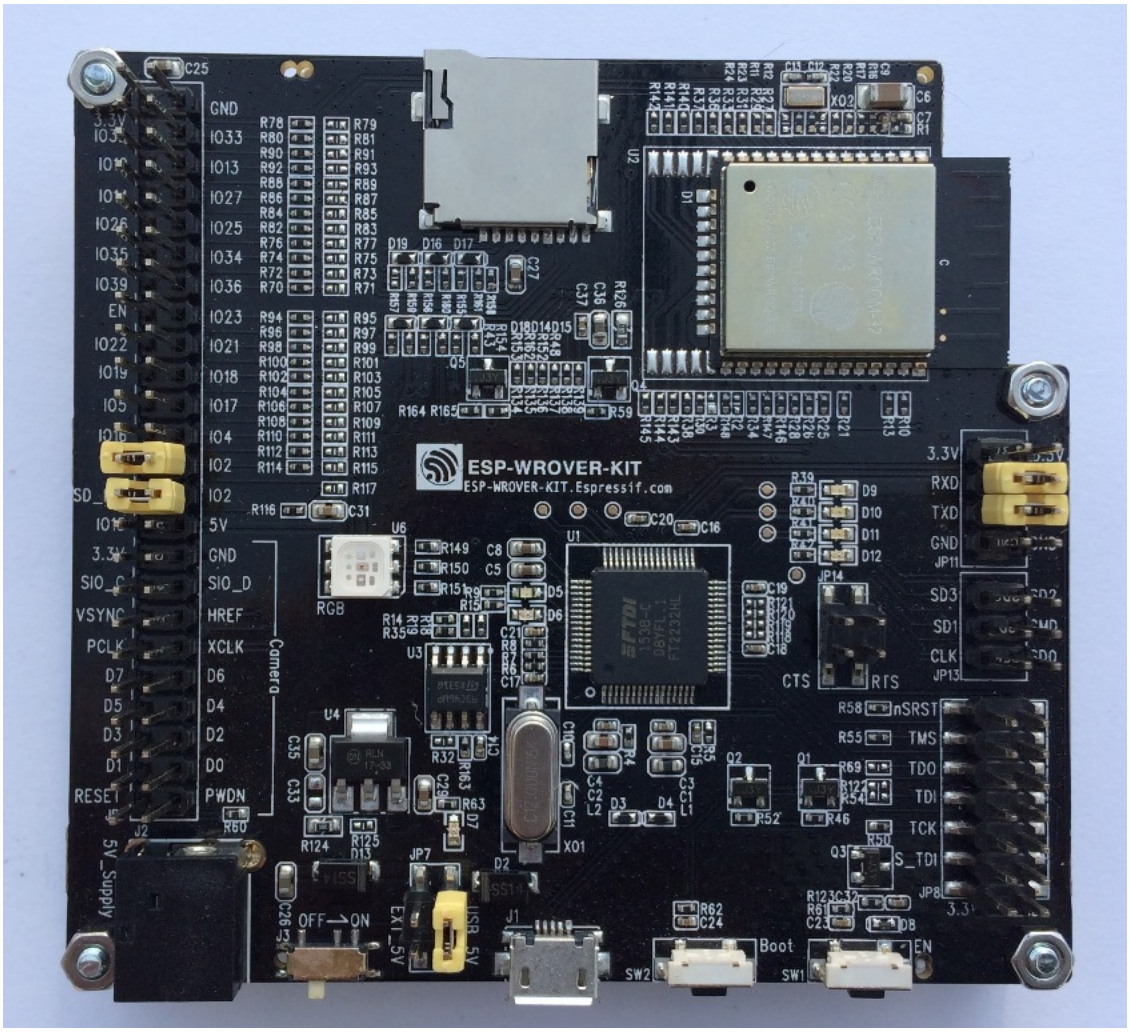

图 13: ESP-WROVER-KIT V2 board

- FTDI Virtual COM Port Drivers

4.2.6 ESP-WROVER-KIT V1 / ESP32 DevKitJ V1

The first version of ESP-WROVER-KIT development board. Shipped with ESP-WROOM-32 on board.

ESP-WROVER-KIT has dual port USB to serial converter for programming and JTAG interface for debugging. Power supply is provided by USB interface or from standard 5 mm power supply jack. Power supply selection is done with a jumper and may be put on/off with a separate switch. The board has MicroSD card slot, 3.2" SPI LCD screen and dedicated header to connect a camera. It provides RGB diode for diagnostics. Includes 32.768 kHz XTAL for internal RTC to operate it in low power modes.

All versions of ESP-WROVER-KIT are ready to accommodate an ESP-WROOM-32 or ESP32-WROVER module.

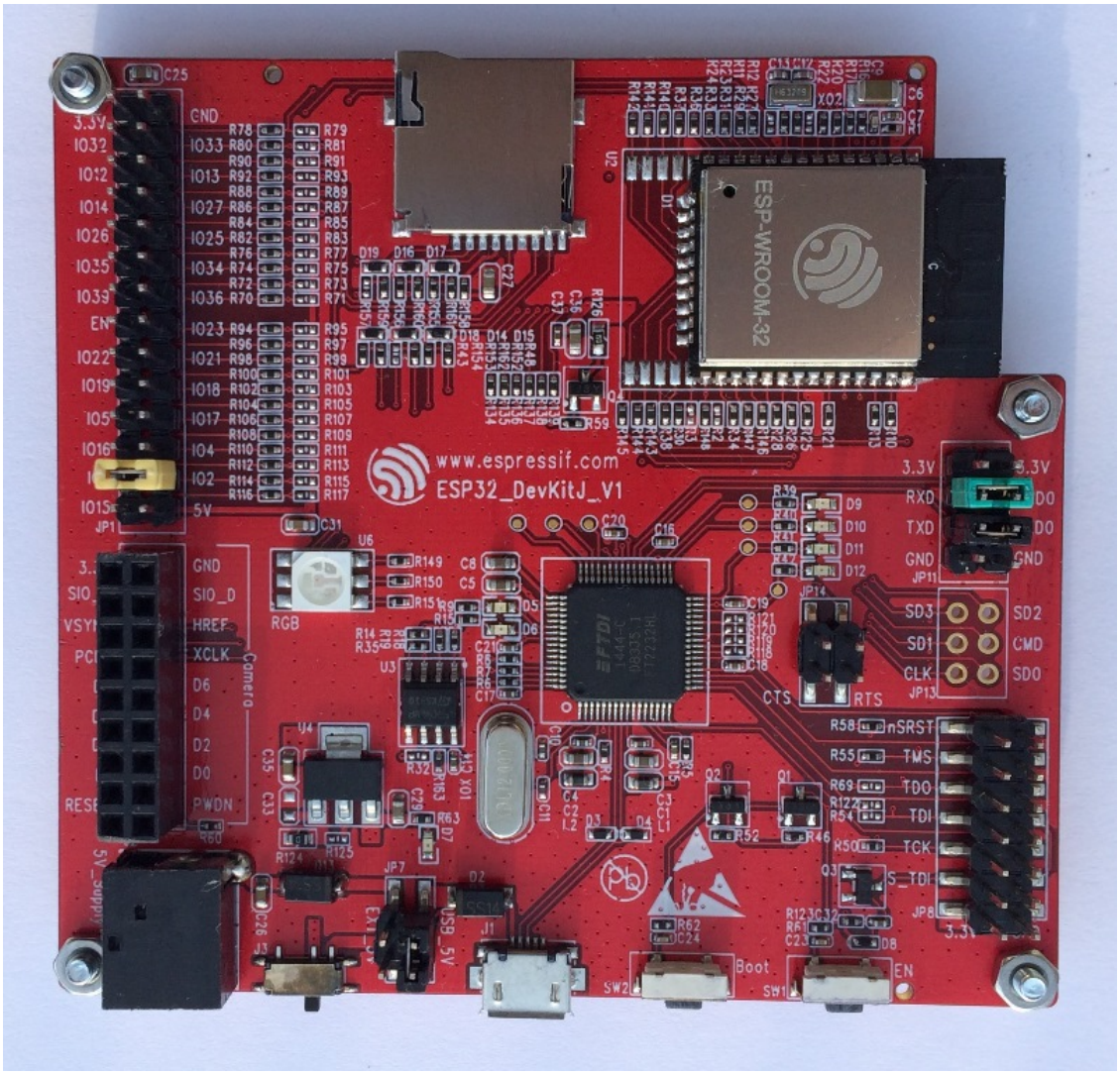

图 14: ESP-WROVER-KIT V1 / ESP32 DevKitJ V1 board

The board has red soldermask.

Documentation

- ESP-WROVER-KIT V1 Schematic (PDF)
- *JTAG 调试*
- FTDI Virtual COM Port Drivers

4.2.7 ESP32 Demo Board V2

One of first feature rich evaluation boards that contains several pin headers, dip switches, USB to serial programming interface, reset and boot mode press buttons, power switch, 10 touch pads and separate header to connect LCD screen.

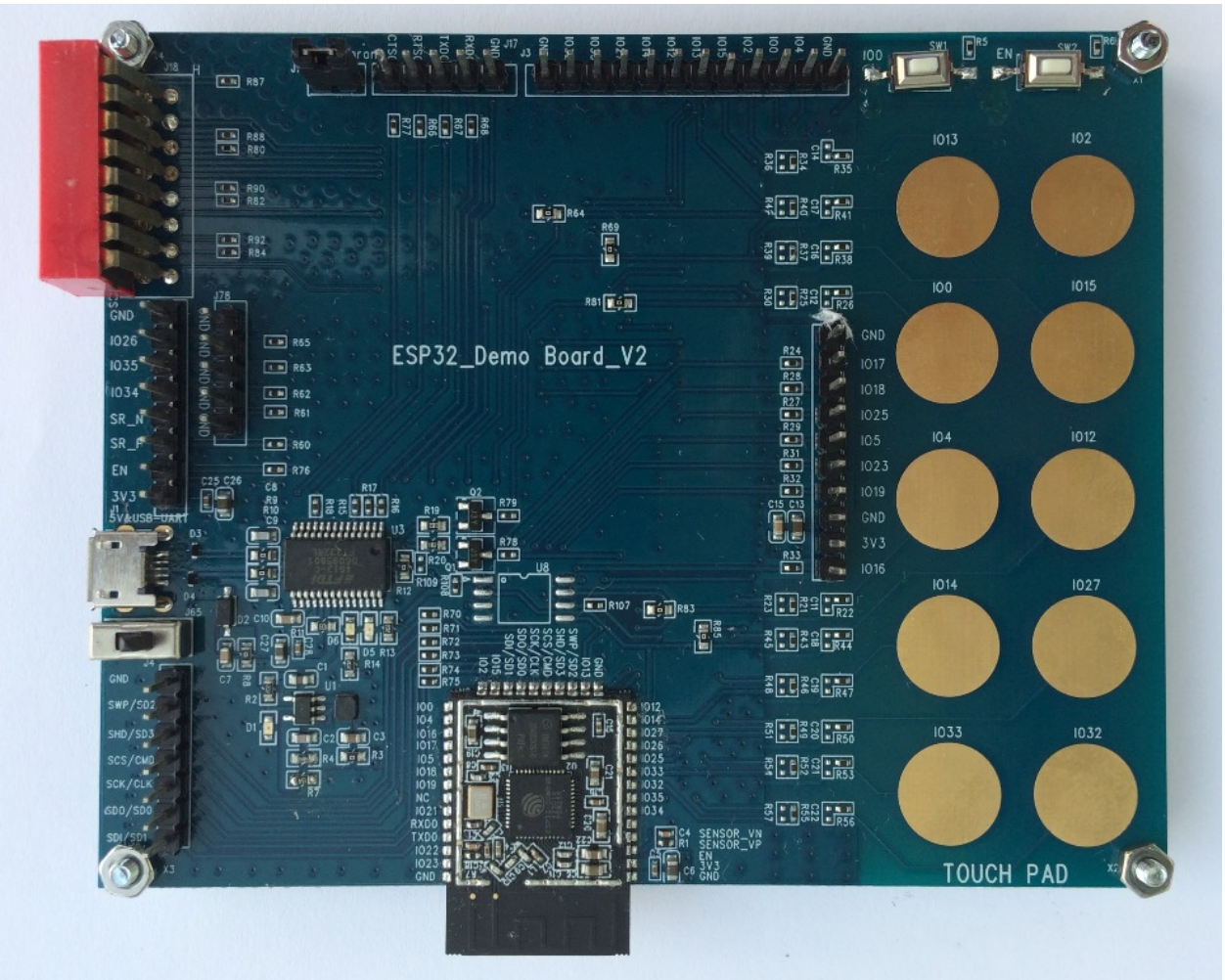

图 15: ESP32 Demo Board V2

Production of this board is discontinued.

Documentation

- ESP32 Demo Board V2 Schematic (PDF)
- FTDI Virtual COM Port Drivers

4.2.8 Related Documents

- *ESP32 Modules and Boards*

CHAPTER 5

API 指南

[English]

5.1 ESP-IDF 编程注意事项

[English]

5.1.1 应用程序的启动流程

本文将会介绍 ESP32 从上电到运行 `app_main` 函数中间所经历的步骤（即启动流程）。

宏观上，该启动流程可以分为如下 3 个步骤：

1. 一级引导程序被固化在了 ESP32 内部的 ROM 中，它会从 Flash 的 `0x1000` 偏移地址处加载二级引导程序至 RAM(IRAM & DRAM) 中。
2. 二级引导程序从 Flash 中加载分区表和主程序镜像至内存中，主程序中包含了 RAM 段和通过 Flash 高速缓存映射的只读段。
3. 主程序运行，这时第二个 CPU 和 RTOS 的调度器可以开始运行。

下面会对上述过程进行更为详细的阐述。

一级引导程序

SoC 复位后，PRO CPU 会立即开始运行，执行复位向量代码，而 APP CPU 仍然保持复位状态。在启动过程中，PRO CPU 会执行所有的初始化操作。APP CPU 的复位状态会在应用程序启动代码的 `call_start_cpu0` 函数中失效。复位向量代码位于 ESP32 芯片掩膜 ROM 的 `0x40000400` 地址处，该地址不能被修改。

复位向量调用的启动代码会根据 `GPIO_STRAP_REG` 寄存器的值来确定 ESP32 的工作模式，该寄存器保存着复位后 bootstrap 引脚的电平状态。根据不同的复位原因，程序会执行不同的操作：

1. 从深度睡眠模式复位：如果 `RTC_CNTL_STORE6_REG` 寄存器的值非零，并且 `RTC_CNTL_STORE7_REG` 寄存器中的 RTC 内存的 CRC 校验值有效，那么程序会使用 `RTC_CNTL_STORE6_REG` 寄存器的值作为入口地址，并立即跳转到该地址运行。如果 `RTC_CNTL_STORE6_REG` 的值为零，或者 `RTC_CNTL_STORE7_REG` 中的 CRC 校验值无效，又或者跳转到 `RTC_CNTL_STORE6_REG` 地址处运行的程序返回，那么将会执行上电复位的相关操作。**注意**：如果想在这里运行自定义的代码，可以参考深度睡眠 文档里面介绍的方法。
2. 上电复位、软件 SoC 复位、看门狗 SoC 复位：检查 `GPIO_STRAP_REG` 寄存器，判断是否 UART 或 SDIO 请求进入下载模式。如果是，则配置好 UART 或者 SDIO，然后等待下载代码。否则程序将会执行软件 CPU 复位的相关操作。
3. 软件 CPU 复位、看门狗 CPU 复位：根据 EFUSE 中的值配置 SPI Flash，然后尝试从 Flash 中加载代码，这部分的内存将会在后面一小节详细介绍。如果从 Flash 中加载代码失败，就会将 BASIC 解析器加压缩到 RAM 中启动。需要注意的是，此时 RTC 看门狗还在使能状态，如果在几百毫秒内没有任何输入事件，那么看门狗会再次复位 SoC，重复整个过程。如果解析器收到了来自 UART 的输入，程序会关闭看门狗。

应用程序的二进制镜像会从 Flash 的 `0x1000` 地址处加载。Flash 的第一个 4kB 扇区用于存储安全引导程序和应用程序镜像的签名。有关详细信息，请查看安全启动文档。

二级引导程序

在 ESP-IDF 中，存放在 Flash 的 `0x1000` 偏移地址处的二进制镜像就是二级引导程序。二级引导程序的源码可以在 ESP-IDF 的 components/bootloader 目录下找到。请注意，对于 ESP32 芯片来说，这并不是唯一的安排程序镜像的方式。事实上用户完全可以把一个功能齐全的应用程序烧写到 Flash 的 `0x1000` 偏移地址处运行，但这超出本文档的范围。ESP-IDF 使用二级引导程序可以增加 Flash 分区的灵活性（使用分区表），并且方便实现 Flash 加密，安全引导和空中升级（OTA）等功能。

当一级引导程序校验并加载完二级引导程序后，它会从二进制镜像的头部找到二级引导程序的入口点，并跳转过去运行。

二级引导程序从 Flash 的 `0x8000` 偏移地址处读取分区表。详细信息请参阅分区表文档分区表 。二级引导程序会寻找出厂分区和 OTA 分区，然后根据 OTA 信息分区的数据决引导哪个分区。

对于选定的分区，二级引导程序将映射到 IRAM 和 DRAM 的数据和代码段复制到它们的加载地址处。对于一些加载地址位于 DROM 和 IROM 区域的段，会通过配置 Flash MMU 为其提供正确的映射。请注意，二级引导程序会为 PRO CPU 和 APP CPU 都配置 Flash MMU，但它只使能了 PRO CPU 的 Flash MMU。这么做的原因在于二级引导程序的代码被加载到了 APP CPU 的高速缓存使用的内存区域，因此使能 APP

CPU 高速缓存的任务就交给了应用程序。一旦代码加载完毕并且设置好 Flash MMU，二级引导程序会从应用程序二进制镜像文件的头部寻找入口地址，然后跳转到该地址处运行。

目前还不支持添加钩子函数到二级引导程序中以自定义应用程序分区选择的逻辑，但是可以通过别的途径实现这个需求，比如根据某个 GPIO 的不同状态来引导不同的应用程序镜像。此类自定义的功能将在未来添加到 ESP-IDF 中。目前，可以通过将 bootloader 组件复制到应用程序目录并在那里进行必要的更改来自定义引导程序。在这种情况下，ESP-IDF 的编译系统将编译应用程序目录中的组件而不是 ESP-IDF 组件目录。

应用程序启动阶段

ESP-IDF 应用程序的入口是 `components/esp32/cpu_start.c` 文件中的 `call_start_cpu0` 函数，该函数主要完成了两件事，一是启用堆分配器，二是使 APP CPU 跳转到其入口点——`call_start_cpu1` 函数。PRO CPU 上的代码会给 APP CPU 设置好入口地址，解除其复位状态，然后等待 APP CPU 上运行的代码设置一个全局标志，以表明 APP CPU 已经正常启动。完成后，PRO CPU 跳转到 `start_cpu0` 函数，APP CPU 跳转到 `start_cpu1` 函数。

`start_cpu0` 和 `start_cpu1` 这两个函数都是弱类型的，这意味着如果某些特定的应用程序需要修改初始化顺序，就可以通过重写这两个函数来实现。`start_cpu0` 默认的实现方式是初始化用户在 `menuconfig` 中选择的组件，具体实现步骤可以阅读 `components/esp32/cpu_start.c` 文件中的源码。请注意，此阶段会调用应用程序中存在的 C++ 全局构造函数。一旦所有必要的组件都初始化好，就会创建 *main task* ，并启动 FreeRTOS 的调度器。

当 PRO CPU 在 `start_cpu0` 函数中进行初始化的时候，APP CPU 在 `start_cpu1` 函数中自旋，等待 PRO CPU 上的调度器启动。一旦 PRO CPU 上的调度器启动后，APP CPU 上的代码也会启动调度器。

主任务是指运行 `app_main` 函数的任务，主任务的堆栈大小和优先级可以在 `menuconfig` 中进行配置。应用程序可以用此任务来完成用户程序相关的初始化设置，比如启动其他的任务。应用程序还可以将主任务用于事件循环和其他通用活动。如果 `app_main` 函数返回，那么主任务将会被删除。

5.1.2 应用程序的内存布局

ESP32 芯片具有灵活的内存映射功能，本小节将介绍 ESP-IDF 默认使用这些功能的方式。

ESP-IDF 应用程序的代码可以放在以下内存区域之一。

IRAM（指令 RAM）

ESP-IDF 将内部 SRAM0 区域（在技术参考手册中有定义）的一部分分配为指令 RAM。除了开始的 64kB 用作 PRO CPU 和 APP CPU 的高速缓存外，剩余内存区域（从 `0x40080000` 至 `0x400A0000` ）被用来存储应用程序中部分需要在 RAM 中运行的代码。

一些 ESP-IDF 的组件和 WiFi 协议栈的部分代码通过链接脚本文件被存放到了这块内存区域。

如果一些应用程序的代码需要放在 IRAM 中运行，可以使用 `IRAM_ATTR` 宏定义进行声明。

```
#include "esp_attr.h"

void IRAM_ATTR gpio_isr_handler(void* arg)
{
    // ...
}
```

下面列举了应用程序中可能或者应该放入 IRAM 中运行例子。

- 当注册中断处理程序的时候设置了 ESP_INTR_FLAG_IRAM ，那么中断处理程序就必须要放在 IRAM 中运行。这种情况下，ISR 只能调用存放在 IRAM 或者 ROM 中的函数。注意：目前所有 FreeRTOS 的 API 都已经存放到了 IRAM 中，所以在中断中调用 FreeRTOS 的中断专属 API 是安全的。如果将 ISR 放在 IRAM 中运行，那么必须使用宏定义 DRAM_ATTR 将该 ISR 用到所有常量数据和调用的函数（包括但不限于 const char 数组）放入 DRAM 中。
- 可以将一些时间关键的代码放在 IRAM 中，这样可以缩减从 Flash 加载代码所消耗的时间。ESP32 是通过 32kB 的高速缓存来从外部 Flash 中读取代码和数据的，将函数放在 IRAM 中运行可以减少由高速缓存未命中引起的时间延迟。

IROM（代码从 Flash 中运行）

如果一个函数没有被显式地声明放在 IRAM 或者 RTC 内存中，则将其置于 Flash 中。Flash 技术参考手册中介绍了 Flash MMU 允许代码从 Flash 执行的机制。ESP-IDF 将从 Flash 中执行的代码放在 0x400D0000—0x40400000 区域的开始，在启动阶段，二级引导程序会初始化 Flash MMU，将代码在 Flash 中的位置映射到这个区域的开头。对这个区域的访问会被透明地缓存到 0x40070000 —0x40080000 范围内的两个 32kB 的块中。

请注意，使用 Window ABI CALLx 指令可能无法访问 0x40000000 —0x40400000 区域以外的代码，所以要特别留意应用程序是否使用了 0x40400000 —0x40800000 或者 0x40800000 —0x40C00000 区域，ESP-IDF 默认不会使用这两个区域。

RTC 快速内存

从深度睡眠模式唤醒后必须要运行的代码要放在 RTC 内存中，更多信息请查阅文档深度睡眠 。

DRAM（数据 RAM）

链接器将非常量静态数据和零初始化数据放入 0x3FFB0000 — 0x3FFF0000 这 256kB 的区域。注意，如果使用蓝牙堆栈，此区域会减少 64kB（通过将起始地址移至 0x3FFC0000 ）。如果使用了内存跟踪的功能，该区域的长度还要减少 16kB 或者 32kB。放置静态数据后，留在此区域中的剩余空间都用作运行时堆。

常量数据也可以放在 DRAM 中，例如，用在 ISR 中的常量数据（参见上面 IRAM 部分的介绍），为此需要使用 DRAM_ATTR 宏来声明。

```
DRAM_ATTR const char[] format_string = "%p %x";
char buffer[64];
sprintf(buffer, format_string, ptr, val);
```

毋庸置疑，不建议在 ISR 中使用 printf 和其余输出函数。出于调试的目的，可以在 ISR 中使用 ESP_EARLY_LOGx 来输出日志，不过要确保将 TAG 和格式字符串都放在了 DRAM 中。

宏 __NOINIT_ATTR 可以用来声明将数据放在 .noinit 段中，放在此段中的数据不会在启动时被初始化，并且在软件重启后会保留原来的值。

例子：

```
__NOINIT_ATTR uint32_t noinit_data;
```

DROM（数据存储在 Flash 中）

默认情况下，链接器将常量数据放入一个 4MB 区域 (0x3F400000 — 0x3F800000)，该区域用于通过 Flash MMU 和高速缓存来访问外部 Flash。一种特例情况是，字面量会被编译器嵌入到应用程序代码中。

RTC 慢速内存

从 RTC 内存运行的代码（例如深度睡眠模块的代码）使用的全局和静态变量必须要放在 RTC 慢速内存中。更多详细说明请查看文档深度睡眠 。

宏 RTC_NOINIT_ATTR 用来声明将数据放入 RTC 慢速内存中，该数据在深度睡眠唤醒后将保持不变。

例子：

```
RTC_NOINIT_ATTR uint32_t rtc_noinit_data;
```

5.1.3 DMA 能力要求

大多数的 DMA 控制器（比如 SPI，SDMMC 等）都要求发送/接收缓冲区放在 DRAM 中，并且按字对齐。我们建议将 DMA 缓冲区放在静态变量中而不是堆栈中。使用 DMA_ATTR 宏可以声明该全局/本地的静态变量具备 DMA 能力，例如：

```
DMA_ATTR uint8_t buffer[]="I want to send something";

void app_main()
{
    // 初始化代码...
    spi_transaction_t temp = {
```

(下页继续)

(续上页)

```
        .tx_buffer = buffer,
        .length = 8*sizeof(buffer),
    };
    spi_device_transmit( spi, &temp );
    // 其他程序
}
```

或者:

```
void app_main()
{
    DMA_ATTR static uint8_t buffer[]="I want to send something";
    // 初始化代码...
    spi_transaction_t temp = {
        .tx_buffer = buffer,
        .length = 8*sizeof(buffer),
    };
    spi_device_transmit( spi, &temp );
    // 其他程序
}
```

在堆栈中放置 DMA 缓冲区仍然是允许的，但是你必须记住:

1. 如果堆栈在 pSRAM 中，切勿尝试这么做，因为堆栈在 pSRAM 中的话就要按照片外 *SRAM* 文档介绍的步骤来操作（至少要在 menuconfig 中使能 SPIRAM_ALLOW_STACK_EXTERNAL_MEMORY），所以请确保你的任务不在 pSRAM 中。
2. 在函数中使用 WORD_ALIGNED_ATTR 宏来修饰变量，将其放在适当的位置上，比如:

```
void app_main()
{
    uint8_t stuff;
    WORD_ALIGNED_ATTR uint8_t buffer[]="I want to send something";   //否则 buffer 数
组会被存储在 stuff 变量的后面
    // 初始化代码...
    spi_transaction_t temp = {
        .tx_buffer = buffer,
        .length = 8*sizeof(buffer),
    };
    spi_device_transmit( spi, &temp );
    // 其他程序
}
```

5.2 构建系统

[English]

本文将介绍乐鑫物联网开发框架中的 *构建系统* 和 *组件* 的相关概念。

如果您想了解如何构建一个新的 ESP-IDF 项目，请阅读本文档。

我们建议您使用 ESP-IDF 模板工程 来开始您的新项目。

5.2.1 使用构建系统

ESP-IDF 的 README.md 文件对如何使用构建系统来构建项目作了简要的说明。

5.2.2 概述

一个 ESP-IDF 项目可以看作是许多不同组件的集合，例如对于一个展示当前湿度的网站服务器来说，它可能会包含如下一些组件：

- ESP32 基础库（libc，rom bindings 等）
- WiFi 驱动库
- TCP/IP 协议栈
- FreeRTOS 操作系统
- 网站服务器
- 湿度传感器的驱动
- 将上述组件组织在一起的主代码

ESP-IDF 可以显式地指定和配置每个组件。在构建项目的时候，构建系统会查找 ESP-IDF 目录、项目目录和用户自定义目录（可选）中所有的组件，然后使用基于文本的菜单系统让用户配置 ESP-IDF 项目中需要的每个组件。在配置结束后，构建系统开始编译整个项目。

概念

- *项目* 特指一个目录，其中包含了构建可执行文件的所有源文件和配置，还有其他的支持型输出文件，比如分区表、数据/文件系统分区和引导程序。
- *项目配置* 保存在项目根目录下名为 sdkconfig 的文件中，它可以通过 `make menuconfig` 进行修改，且一个项目只能包含一个项目配置。
- *应用程序* 是由 ESP-IDF 构建得到的可执行文件。一个项目通常会构建两个应用程序：项目应用程序（主可执行文件，即用户自定义的固件）和引导程序（启动并初始化项目应用程序的引导程序）。

- 组件是模块化的、独立的代码，它们被编译成静态库（.a 文件）后再链接成应用程序，有些组件是 ESP-IDF 官方提供的，有些则可能来自其它项目。

以下内容并不是项目的组成部分：

- ESP-IDF 并不是项目的一部分，相反，它是独立的，并通过 IDF_PATH 环境变量链接到项目中，这样做就可以使 IDF 框架与您的项目分离，其中 IDF_PATH 变量保存了 ESP-IDF 目录的路径。
- 交叉编译工具链并不是项目的组成部分，它应该被安装在系统 PATH 环境变量中，或者可以在项目配置中显式指定工具链的前缀为本地的安装路径。

示例项目

示例项目的目录树结构可能如下所示：

```
- myProject/
            - Makefile
            - sdkconfig
            - components/ - component1/ - component.mk
                                        - Kconfig
                                        - src1.c
                          - component2/ - component.mk
                                        - Kconfig
                                        - src1.c
                                        - include/ - component2.h
            - main/       - src1.c
                          - src2.c
                          - component.mk
            - build/
```

该示例项目 myProject 包含以下组成部分：

- 项目顶层 Makefile，该 Makefile 设置了 PROJECT_NAME 变量，还可以定义作用于整个项目的其它 make 变量（可选）。顶层 Makefile 会导入核心 Makefile 文件 $(IDF_PATH)/make/project.mk ，由它负责实现 ESP-IDF 构建系统的剩余部分。
- 项目配置文件 sdkconfig，执行 make menuconfig 后会创建或更新此文件，该文件中保存了项目中所有组件的配置信息（包括 ESP-IDF 本身）。sdkconfig 文件可能会也可能不会被添加到项目的源代码管理系统中。
- 可选的组件目录中包含了属于项目一部分的自定义组件，不是每一个项目都需要它，但它有助于构建可重用代码或者导入第三方组件。
- main 目录是一个特殊的 *伪组件*，它包含项目本身的源代码。main 是默认名称，Makefile 变量 COMPONENT_DIRS 默认会导入此组件，但您也可以修改此变量（或者设置 EXTRA_COMPONENT_DIRS ）以查找其他位置的组件。

- build 目录在项目构建的时候创建或者更新，里面包含有构建生成的临时目标文件和库以及最终输出的二进制文件。此目录通常不会被添加到项目的源代码管理系统中，也不会随着项目源代码被发布。

组件目录中会包含组件自己的 Makefile 文件 component.mk ，里面会定义一些变量来控制该组件的构建过程，以及它与整个项目的集成。更多详细信息请参考*组件 Makefiles*。

每个组件还可以包含一个 Kconfig 文件，它用于定义 menuconfig 时展示的组件配置信息的选项规则。某些组件还可能还会包含 Kconfig.projbuild 和 Makefile.projbuild 特殊文件，他们可以用来覆盖项目的部分配置。

项目 Makefiles

每个项目都有一个 Makefile ，它包含整个项目的构建设置。默认情况下，项目 Makefile 可以非常小。

最小 Makefile 示例

```
PROJECT_NAME := myProject

include $(IDF_PATH)/make/project.mk
```

必须设置的项目变量

- PROJECT_NAME: 项目名称，最终输出的二进制文件也使用该名称，即 myProject.bin，myProject.elf 。

可选的项目变量

以下这些变量都有默认值，用户可以重写这些变量以自定义构建行为。查看 make/project.mk 文件可以获得所有的实现细节。

- PROJECT_PATH: 顶层项目目录，默认是包含 Makefile 文件的目录，许多其他的项目变量都基于此变量。注意，项目路径中不能包含有空格。
- BUILD_DIR_BASE: 所有对象、库、二进制文件的输出目录，默认为 $(PROJECT_PATH)/build。
- COMPONENT_DIRS: 组件的搜索目录，默认为 $(IDF_PATH)/components，$(PROJECT_PATH)/components，$(PROJECT_PATH)/main 和 EXTRA_COMPONENT_DIRS 。如果您不希望从这些目录中搜索组件，请重写此变量。
- EXTRA_COMPONENT_DIRS: 组件额外的搜索路径，可选。
- COMPONENTS: 要构建进项目中的组件列表，默认为 COMPONENT_DIRS 指定目录中所有的组件。
- EXCLUDE_COMPONENTS: 在构建的过程中需要剔除的组件列表，可选。请注意这只会减少构建的时间，并不会减少最终二进制文件的大小。

- TEST_EXCLUDE_COMPONENTS：在构建单元测试的过程中需要剔除的组件列表，可选。

以上这些 Makefile 变量中的任何路径都要使用绝对路径，您可以使用 $(PROJECT_PATH)/xxx，$(IDF_PATH)/xxx，或者使用 Make 内置函数 $(abspath xxx) 将相对路径转换为绝对路径。

以上这些变量要在 Makefile 中 include $(IDF_PATH)/make/project.mk 的前面进行设置。

组件 Makefiles

每个项目都包含一个或者多个组件，这些组件可以是 ESP-IDF 的一部分，也可以从其他组件目录添加。

组件是包含 component.mk 文件的任何目录。

搜索组件

搜索 COMPONENT_DIRS 中指定的目录以查找项目会使用的组件，目录可以是组件本身（即他们包含 component.mk 文件），也可以是包含组件的上层目录。

运行 make list-components 命令可以查询这些变量的值，这有助于调试组件的搜索路径是否正确。

同名组件

ESP-IDF 搜索组件时，会按照 COMPONENT_DIRS 指定的顺序依次进行，这意味着在默认情况下，首先是 ESP-IDF 组件，然后是项目组件，最后是 EXTRA_COMPONENT_DIRS 中的组件。如果这些目录中的两个或者多个包含具有相同名字的组件，则使用搜索到的最后一个位置的组件。这就允许将组件复制到项目目录中再修改来覆盖 ESP-IDF 组件，如果使用这种方式，ESP-IDF 目录本身可以保持不变。

最小组件 Makefile

最简单的 component.mk 文件可以是一个空文件，如果文件为空，则组件的默认构建行为会被设置为：

- makefile 所在目录中的所有源文件（*.c，*.cpp，*.cc，*.S）将会被编译进组件库中。
- 子目录 include 将被添加到其他组件的全局头文件搜索路径中。
- 组件库将会被链接到项目的应用程序中。

更完整的组件 makefile 可以查看*组件 Makefile 示例*。

请注意，空的 component.mk 文件同没有 component.mk 文件之间存在本质差异，前者会调用默认的组件构建行为，后者不会发生默认的组件构建行为。一个组件中如果只包含影响项目配置或构建过程的文件，那么它可以没有 component.mk 文件。

预设的组件变量

以下特定于组件的变量可以在 component.mk 中使用，但不应该被修改。

- COMPONENT_PATH：组件的目录，即包含 component.mk 文件的绝对路径，路径中不能包含空格。
- COMPONENT_NAME：组件的名字，默认为组件目录的名称。
- COMPONENT_BUILD_DIR：组件的构建目录，即存放组件构建输出的绝对路径，它是 *$(BUILD_DIR_BASE)* 的子目录。该变量也是构建组件时的当前工作目录，所以 make 中的相对路径都以此目录为基础。
- COMPONENT_LIBRARY：组件构建后的静态库文件（相对于组件的构建目录）的名字，默认为 $(COMPONENT_NAME).a。

以下变量在项目顶层中设置，并被导出到组件中构建时使用：

- PROJECT_NAME：项目名称，在项目的 Makefile 中设置。
- PROJECT_PATH：包含项目 Makefile 的目录的绝对路径。
- COMPONENTS：此次构建中包含的所有组件的名字。
- CONFIG_*：项目配置中的每个值在 make 中都对应一个以 CONFIG_ 开头的变量。
- CC，LD，AR，OBJCOPY：gcc xtensa 交叉编译工具链中每个工具的完整路径。
- HOSTCC，HOSTLD，HOSTAR：主机本地工具链中每个工具的全名。
- IDF_VER：ESP-IDF 的版本号，可以通过检索 $(IDF_PATH)/version.txt 文件（假如存在的话）或者使用 git 命令 git describe 来获取。这里推荐的格式是在一行中指定主 IDF 的发布版本号，例如标记为 v2.0 的发布版本或者是标记任意一次提交记录的 v2.0-275-g0efaa4f。应用程序可以通过调用*esp_get_idf_version()* 函数来使用该变量。
- IDF_VERSION_MAJOR, IDF_VERSION_MINOR, IDF_VERSION_PATCH: ESP-IDF 的组件版本，可用于条件表达式。请注意这些信息的精确度不如 IDF_VER 变量，版本号 v4.0-dev-*，v4.0-beta1，v4.0-rc1 和 v4.0 对应的 IDF_VERSION_* 变量值是相同的，但是 IDF_VER 的值是不同的。

如果您在 component.mk 文件中修改这些变量，这并不会影响其它组件的构建，但可能会使您的组件变得难以构建或调试。

可选的项目通用组件变量

可以在 component.mk 中设置以下变量来控制整个项目的构建行为：

- COMPONENT_ADD_INCLUDEDIRS：相对于组件目录的路径，将被添加到项目中所有组件的头文件搜索路径中。如果该变量未被覆盖，则默认为 include 目录。如果一个头文件路径仅仅为当前组件所用，那么应该将该路径添加到 COMPONENT_PRIV_INCLUDEDIRS 中。
- COMPONENT_ADD_LDFLAGS：添加链接参数到全局 LDFLAGS 中用以指导链接最终的可执行文件，默认为 -l$(COMPONENT_NAME)。如果将预编译好的库添加到此目录，请使用它们为绝对路径，即 $(COMPONENT_PATH)/libwhatever.a。

- COMPONENT_DEPENDS：需要在当前组件之前构建的组件列表，这对于处理链接时的依赖不是必需的，因为所有组件的头文件目录始终可用。如果一个组件会生成一个头文件，然后另外一个组件需要使用它，此时该变量就有必要进行设置。大多数的组件不需要设置此变量。
- COMPONENT_ADD_LINKER_DEPS：保存一些文件的路径，当这些文件发生改变时，会触发 ELF 文件重新链接。该变量通常用于链接脚本文件和二进制文件，大多数的组件不需要设置此变量。

以下变量仅适用于属于 ESP-IDF 的组件：

- COMPONENT_SUBMODULES：组件使用的 git 子模块的路径列表（相对于 COMPONENT_PATH）。这些路径会在构建的过程中被检查（并在必要的时候初始化）。如果组件位于 IDF_PATH 目录之外，则忽略此变量。

可选的组件特定变量

以下变量可以在 component.mk 中进行设置，用以控制该组件的构建行为：

- COMPONENT_PRIV_INCLUDEDIRS：相对于组件目录的目录路径，该目录仅会被添加到该组件源文件的头文件搜索路径中。
- COMPONENT_EXTRA_INCLUDES：编译组件的源文件时需要指定的额外的头文件搜索路径，这些路径将以 -I 为前缀传递给编译器。这和 COMPONENT_PRIV_INCLUDEDIRS 变量的功能有些类似，但是这些路径不会相对于组件目录进行扩展。
- COMPONENT_SRCDIRS：相对于组件目录的目录路径，这些路径用于搜索源文件（*.cpp，*.c，*.S），默认为 .，即组件目录本身。重写该变量可以指定包含源文件的不同目录列表。
- COMPONENT_OBJS：要编译生成的目标文件，默认是 COMPONENT_SRCDIRS 中每个源文件的.o 文件。重写该变量将允许您剔除 COMPONENT_SRCDIRS 中的某些源文件，否则他们将会被编译。相关示例请参阅指定需要编译的组件源文件。
- COMPONENT_EXTRA_CLEAN：相对于组件构建目录的路径，指向 component.mk 文件中自定义 make 规则生成的任何文件，它们也是 make clean 命令需要删除的文件。相关示例请参阅源代码生成。
- COMPONENT_OWNBUILDTARGET & COMPONENT_OWNCLEANTARGET：这些目标允许您完全覆盖组件的默认编译行为。有关详细信息，请参阅完全覆盖组件的 *Makefile*。
- COMPONENT_CONFIG_ONLY：如果设置了此标志，则表示组件根本不会产生构建输出（即不会构建得到 COMPONENT_LIBRARY），并且会忽略大多数其它组件变量。此标志用于 IDF 内部组件，其中仅包含 KConfig.projbuild 和/或 Makefile.projbuild 文件来配置项目，但是没有源文件。
- CFLAGS：传递给 C 编译器的标志。根据项目设置已经定义一组默认的 CFLAGS，可以通过 CFLAGS += 来为组件添加特定的标志，也可以完全重写该变量（尽管不推荐这么做）。
- CPPFLAGS：传递给 C 预处理器的标志（用于 .c，.cpp 和 .S 文件）。根据项目设置已经定义一组默认的 CPPFLAGS ，可以通过 CPPFLAGS += 来为组件添加特定的标志，也可以完全重写该变量（尽管不推荐这么做）。
- CXXFLAGS：传递给 C++ 编译器的标志。根据项目设置已经定义一组默认的 CXXFLAGS ，可以通过 CXXFLAGS += 来为组件添加特定的标志，也可以完全重写该变量（尽管不推荐这么做）。

如果要将编译标志应用于单个源文件，您可以将该源文件的目标规则覆盖，例如：

```
apps/dhcpserver.o: CFLAGS += -Wno-unused-variable
```

如果上游代码在编译的时候发出了警告，那这么做可能会很有效。

配置组件

每个组件都可以包含一个 Kconfig 文件，和 `component.mk` 放在同一个目录下。Kconfig 中包含此组件在 `make menuconfig` 时要展示的配置规则的设置。

运行 menuconfig 时，可以在 `Component Settings` 菜单栏下找到这些设置。

创建一个组件的 Kconfig 文件，最简单的方法就是使用 ESP-IDF 中现有的 Kconfig 文件作为模板，在这基础上进行修改。

有关示例请参阅添加条件配置。

预处理器定义

ESP-IDF 构建系统会在命令行中添加以下 C 预处理定义：

- `ESP_PLATFORM` —可以用来检测在 ESP-IDF 内发生的构建行为。
- `IDF_VER` —ESP-IDF 的版本，请参阅预设的组件变量。

构建的内部过程

顶层：项目 Makefile

- `make` 始终从项目目录处运行，并且项目的 makefile 名字通常为 Makefile 。
- 项目的 makefile 文件会设置 `PROJECT_NAME` ，并且可以自定义其他可选的项目变量。
- 项目 makefile 文件会导入 `$(IDF_PATH)/make/project.mk` ，该文件中会导入项目级的 Make 逻辑。
- `project.mk` 填写默认的项目级 make 变量，并导入项目配置中的 make 变量。如果生成的包含项目配置的 makefile 文件已经过期，那么它将会被重新生成（通过 `project_config.mk` 中的目标规则），然后 make 进程从顶层重新开始。
- `project.mk` 根据默认组件目录或者可选项目变量中设置的自定义组件列表来编译组件。
- 每个组件都可以设置一些可选的项目通用组件变量 ，他们会通过 `component_project_vars.mk` 被导入 `project.mk` 文件中。如果这些文件有缺失或者过期，他们会被重新生成（通过对组件 makefile 的递归调用），然后 make 进程从顶层重新开始。
- 组件中的 Makefile.projbuild 文件被包含在了 make 的进程中，以添加额外的目标或者配置。

- 默认情况下，项目 makefile 还为每个组件生成顶层的编译和清理目标，并设置 app 和 clean 目标来调用所有这些子目标。
- 为了编译每个组件，对组件 makefile 执行递归构建。

为了更好地理解项目的构建过程，请通读 `project.mk` 文件。

第二层：组件 Makefile 文件

- 每次调用组件 makefile 文件都是通过 `$(IDF_PATH)/make/component_wrapper.mk` 这个包装器进行的。
- 此组件包装器包含了所有组件的 `Makefile.componentbuild` 文件，使这些文件中的任何配置，变量都可用于每个组件。
- 调用 `component_wrapper.mk` 时将当前目录设置为组件构建目录，并将 `COMPONENT_MAKEFILE` 变量设置为 `component.mk` 的绝对路径。
- `component_wrapper.mk` 为所有组件变量设置默认值，然后导入 `component.mk` 文件来覆盖或修改这些变量。
- 如果未定义 `COMPONENT_OWNBUILDTARGET` 和 `COMPONENT_OWNCLEANTARGET` 文件，则会为组件的源文件和必备组件 `COMPONENT_LIBRARY` 静态库文件创建默认构建和清理目标。
- `component_project_vars.mk` 文件在 `component_wrapper.mk` 中有自己的目标，如果由于组件的 makefile 或者项目配置的更改而需要重建此文件，则从 `project.mk` 文件中进行评估。

为了更好地理解组件制作过程，请阅读 `component_wrapper.mk` 文件和 ESP-IDF 中的 `component.mk` 文件。

以非交互的方式运行 Make

如果在运行 `make` 的时候不希望出现交互式提示（例如：在 IDE 或自动构建系统中），可以将 `BATCH_BUILD=1` 添加到 make 的参数中（或者将其设置为环境变量）。

设置 `BATCH_BUILD` 意味着：

- 详细输出（与 `V=1` 相同，见下文），如果不需要详细输出，就设置 `V=0` 。
- 如果项目配置缺少新配置项（来自新组件或者 ESP-IDF 更新），则项目使用默认值，而不是提示用户输入每个项目。
- 如果构建系统需要调用 `menuconfig` ，则会打印错误并且构建失败。

构建目标的进阶用法

- `make app`, `make bootloader`, `make partition table` 可以根据需要为项目单独构建生成应用程序文件、启动引导文件和分区表文件。
- `make erase_flash` 和 `make erase_ota` 会调用 esptool.py 脚本分别擦除整块闪存芯片或者其中 OTA 分区的内容。

- `make size` 会打印应用程序的大小信息。`make size-components` 和 `make size-files` 两者功能相似，分别打印每个组件或者每个源文件大小的详细信息。

调试 Make 的过程

调试 ESP-IDF 构建系统的一些技巧：

- 将 `V=1` 添加到 make 的参数中（或将其设置为环境变量）将使 make 回显所有已经执行的命令，以及为子 make 输入的每个目录。
- 运行 `make -w` 将导致 make 在为子 make 输入时回显每个目录——与 `V=1` 相同但不回显所有命令。
- 运行 `make --trace` （可能除了上述参数之一）将打印出构建时的每个目标，以及导致它构建的依赖项）。
- 运行 `make -p` 会打印每个 makefile 中每个生成的目标的（非常详细的）摘要。

更多调试技巧和通用的构建信息，请参阅 GNU 构建手册。

警告未定义的变量

默认情况下，如果引用了未定义的变量（如 `$(DOES_NOT_EXIST)`），构建过程将会打印警告，这对于查找变量名称中的错误非常有用。

如果不想要此行为，可以在 menuconfig 顶层菜单下的 *SDK tool configuration* 中禁用它。

请注意，如果在 Makefile 中使用 `ifdef` 或者 `ifndef`，则此选项不会出发警告。

覆盖项目的部分内容

Makefile.projbuild

如果一个组件含有必须要在项目构建过程的顶层进行计算的变量，则可以在组件目录下创建名为 `Makefile.projbuild` 的文件，项目在执行 `project.mk` 的时候会导入此 makefile 。

例如，如果您的组件需要为整个项目添加 CFLAGS（不仅仅是为自身的源文件），那么可以在 `Makefile.projbuild` 中设置 `CFLAGS +=` 。

`Makefile.projbuild` 文件在 ESP-IDF 中大量使用，用于定义项目范围的构建功能，例如 `esptool.py` 命令行参数和 `bootloader` 这个特殊的程序。

请注意，`Makefile.projbuild` 对于最常见的组件不是必需的 - 例如向项目中添加 include 目录，或者将 LDFLAGS 添加到最终链接步骤，同样可以通过 `component.mk` 文件来自定义这些值。有关详细信息，请参阅可选的项目通用组件变量 。

警告: 在此文件中设置变量或者目标时要小心，由于这些值包含在项目的顶层 makefile 中，因此他们可以影响或者破坏所有组件的功能！

KConfig.projbuild

这相当于 `Makefile.projbuild` 的组件配置 KConfig 文件，如果要在 menuconfig 的顶层添加配置选项，而不是在 组件配置子菜单中，则可以在 `component.mk` 文件所在目录中的 KConfig.projbuild 文件中定义这些选项。

在此文件中添加配置时要小心，因为他们将包含在整个项目配置中，在可能的情况下，通常最好为组件创建和配置 KConfig 文件。

Makefile.componentbuild

对于一些特殊的组件，比如它们会使用工具从其余文件中生成源文件，这时就有必要将配置、宏或者变量的定义添加到每个组件的构建过程中。这是通过在组件目录中包含 `Makefile.componentbuild` 文件来实现的。此文件在 `component.mk` 文件之前被导入 `component_wrapper.mk` 中。同 `Makefile.projbuild` 文件一样，请留意这些文件，因为他们包含在每个组件的构建中，所有只有在编译完全不同的组件时才会出现 `Makefile.componentbuild` 错误。

仅配置的组件

仅配置的组件是一类不包含源文件的特殊组件，只有 `Kconfig.projbuild` 和 `Makefile.projbuild` 文件，可以在 `conponent.mk` 文件中设置标志 `COMPONENT_CONFIG_ONLY`。如果设置了此标志，则忽略大多数其他组件变量，并且不会为组件执行构建操作。

组件 Makefile 示例

因为构建环境试图设置大多数情况都能工作的合理默认值，所以 `component.mk` 可能非常小，甚至是空的，请参考*最小组件 Makefile*。但是某些功能通常需要覆盖组件的变量。

以下是 `component.mk` 的一些更高级的示例：

增加源文件目录

默认情况下，将忽略子目录。如果您的项目在子目录中而不是在组件的根目录中有源文件，那么您可以通过设置 `COMPONENT_SRCDIRS` 将其告知构建系统：

```
COMPONENT_SRCDIRS := src1 src2
```

构建系统将会编译 src1/ 和 src2/ 子目录中的所有源文件。

指定源文件

标准 component.mk 逻辑将源目录中的所有.S 和.c 文件添加为无条件编译的源。通过将 COMPONENT_OBJS 变量手动设置为需要生成的对象的名称，可以绕过该逻辑并对要编译的对象进行硬编码。

```
COMPONENT_OBJS := file1.o file2.o thing/filea.o thing/fileb.o anotherthing/main.o
COMPONENT_SRCDIRS := . thing anotherthing
```

请注意，还需要另外设置 COMPONENT_SRCDIRS 。

添加条件配置

配置系统可用于有条件地编译某些文件，具体取决于 make menuconfig 中选择的选项。为此，ESP-IDF 具有 compile_only_if 和 compile_only_if_not 的宏：

Kconfig:

```
config FOO_ENABLE_BAR
    bool "Enable the BAR feature."
    help
        This enables the BAR feature of the FOO component.
```

component.mk:

```
$(call compile_only_if,$(CONFIG_FOO_ENABLE_BAR),bar.o)
```

从示例中可以看出，compile_only_if 宏将条件和目标文件列表作为参数。如果条件为真（在这种情况下：如果在 menuconfig 中启用了 BAR 功能），将始终编译目标文件（在本例中为 bar.o）。相反的情况也是如此，如果条件不成立，bar.o 将永远不会被编译。compile_only_if_not 执行相反的操作，如果条件为 false 则编译，如果条件为 true 则不编译。

这也可以用于选择或者删除实现，如下所示：

Kconfig:

```
config ENABLE_LCD_OUTPUT
    bool "Enable LCD output."
    help
        Select this if your board has a LCD.

config ENABLE_LCD_CONSOLE
    bool "Output console text to LCD"
    depends on ENABLE_LCD_OUTPUT
    help
```

(下页继续)

(续上页)

```
        Select this to output debugging output to the lcd

config ENABLE_LCD_PLOT
    bool "Output temperature plots to LCD"
    depends on ENABLE_LCD_OUTPUT
    help
        Select this to output temperature plots
```

component.mk:

```
# If LCD is enabled, compile interface to it, otherwise compile dummy interface
$(call compile_only_if,$(CONFIG_ENABLE_LCD_OUTPUT),lcd-real.o lcd-spi.o)
$(call compile_only_if_not,$(CONFIG_ENABLE_LCD_OUTPUT),lcd-dummy.o)

#We need font if either console or plot is enabled
$(call compile_only_if,$(or $(CONFIG_ENABLE_LCD_CONSOLE),$(CONFIG_ENABLE_LCD_PLOT)),␣
↪font.o)
```

请注意使用 Make 或者函数来包含字体文件。其他的替换函数，比如 `and` 和 `if` 也适用于此处。也可以使用不在 menuconfig 中定义的变量，ESP-IDF 使用默认的 Make 策略，将一个空的或者只包含空格的变量视为 false ，而其中任何非空格的比那辆都为 true 。

(注意：本文档的历史版本建议将目标文件添加到 `COMPONENT_OBJS` 中，虽然这仍然可行，但是只有当组件中的所有目标文件都明确命名时才会起作用，并且在 `make clean` 后并不会清除 make 中取消选择的目标文件)。

源代码生成

某些组件会出现源文件未随组件本身提供，而必须从另外一个文件生成的情况。假设我们的组件有一个头文件，该文件由 BMP 文件转换后的二进制数据组成，假设使用 bmp2h 的工具进行转换，然后将头文件包含在名为 graphics_lib.c 的文件中：

```
COMPONENT_EXTRA_CLEAN := logo.h

graphics_lib.o: logo.h

logo.h: $(COMPONENT_PATH)/logo.bmp
    bmp2h -i $^ -o $@
```

这个示例会在当前目录（构建目录）中生成 graphics_lib.o 和 logo.h 文件，而 logo.bmp 随组件一起提供并位于组件路径下。因为 logo.h 是一个生成的文件，所以当调用 `make clean` 时需要清理它，这就是为什么要将它添加到 `COMPONENT_EXTRA_CLEAN` 变量中。

润色与改进

将 logo.h 添加作为 graphics_lib.o 的依赖项会导致在编译 graphics_lib.c 之前先生成它。

如果另一个组件中的源文件需要使用 logo.h，则必须将此组件的名称添加到另一个组件的 COMPONENT_DEPENDS 列表中，以确保组件按顺序编译。

嵌入二进制数据

有时您的组件希望使用一个二进制文件或者文本文件，但是您又不希望将它重新格式化为 C 源文件。

这时，您可以在 component.mk 文件中设置变量 COMPONENT_EMBED_FILES，以这种方式指定要嵌入的文件的名称：

```
COMPONENT_EMBED_FILES := server_root_cert.der
```

或者，如果文件是字符串，则可以使用变量 COMPONENT_EMBED_TXTFILES，这将把文本文件的内容当成以 null 结尾的字符串嵌入：

```
COMPONENT_EMBED_TXTFILES := server_root_cert.pem
```

文件的内容会被编译进 flash 中的.rodata 段，并通过符号名称来访问，如下所示：

```
extern const uint8_t server_root_cert_pem_start[] asm("_binary_server_root_cert_pem_start
↪");
extern const uint8_t server_root_cert_pem_end[]   asm("_binary_server_root_cert_pem_end
↪");
```

符号名称是根据文件的全名生成的，如 COMPONENT_EMBED_FILES 中的所示，字符 / ，. ，等都将会被下划线替代。符号名称中的 _binary 前缀由 objcopy 添加，对于文本和二进制文件都是相同的。

有关使用此技术的示例，请参考 protocols/https_request - 证书文件的内容会在编译时从.pem 文件中加载。

完全覆盖组件的 Makefile

显然，在某些情况下，所有这些配置都不足以满足某个组件，例如，当组件基本上是另一个第三方组件的包装器时，该第三方组件最初不打算在 ESP-IDF 构建系统下工作，在这种情况下，可以通过设置 COMPONENT_OWNBUILDTARGET 和可能的 COMPONENT_OWNCLEANTARGET，并在 component.mk 中定义名为 build 和 clean 的目标。构建目标可以执行任何操作，只要它为项目生成了 $(COMPONENT_LIBRARY) ，并最终被链接到应用程序二进制文件中即可。

(实际上，这并不是必须的 - 如果 COMPONENT_ADD_LDFLAGS 变量被覆盖，那么组件可以指示链接器链接其他二进制文件。)

自定义 sdkconfig 的默认值

对于示例工程或者其他您不想指定完整 sdkconfig 配置的项目，但是您确实希望覆盖 ESP-IDF 默认值中的某些键值，则可以在项目中创建文件 `sdkconfig.defaults`，运行 `make defconfig` 或从头创建新配置时将会使用此文件。

要想覆盖此文件的名称，请设置 `SDKCONFIG_DEFAULTS` 环境变量。

保存 flash 参数

在某些情况下，我们希望在没有 IDF 的情况下烧写目标板卡，对于这种情况，我们希望保存构建的二进制文件、esptool.py 和 esptool write_flash 命令的参数。可以简单编写一段脚本来保存二进制文件和 esptool.py，并且使用命令 `make print_flash_cmd` 来查看烧写 flash 时的参数。

```
--flash_mode dio --flash_freq 40m --flash_size detect 0x1000 bootloader/bootloader.bin␣
↪0x10000 example_app.bin 0x8000 partition_table_unit_test_app.bin
```

然后使用这段 flash 参数作为 esptool write_flash 命令的参数：

```
python esptool.py --chip esp32 --port /dev/ttyUSB0 --baud 921600 --before default_reset -
↪-after hard_reset write_flash -z --flash_mode dio --flash_freq 40m --flash_size detect␣
↪0x1000 bootloader/bootloader.bin 0x10000 example_app.bin 0x8000 partition_table_unit_
↪test_app.bin
```

5.2.3 构建 Bootloader

引导程序默认作为 `make all` 的一部分被构建，或者也可以通过 `make bootloader-clean` 来单独构建，此外还可以通过 `make bootloader-list-components` 来查看构建引导程序时包含的组件。

引导程序是一个特殊的组件，因为主项目中的二级引导程序拥有单独的.EFL 和.BIN 文件。但是它与主项目共享配置和构建目录。

这是通过在 components/bootloader/subproject 下添加子项目来完成的。这个子项目有自己的 Makefile，但它希望通过 components/bootloader/Makefile.projectbuild 文件中的一些配置使自己从主项目的 Makefile 被调用。有关详细信息，请参阅这些文件。

5.3 构建系统（CMake 版）

[English]

注解： 本文档将介绍如何使用 CMake 编译系统。目前，CMake 编译系统仍处于预览发布阶段，如您在使用中遇到任何问题，请前往 ESP-IDF 提交 Issues。

未来，CMake 编译系统将在 ESP-IDF v4.0 发布后过渡为默认编译系统，现行基于 GNU Make 的编译系统将在 ESP-IDF v5.0 后弃用。

重要： 目前，CMake 编译系统尚不支持以下功能：

- Eclipse IDE 文档
- 安全启动
- Flash 加密

未来，CMake 编译系统将在 ESP-IDF v4.0 发布后取代现有基于 GNU Make 的编译系统，成为默认编译系统。我们会在 ESP-IDF v4.0 发布前逐步完善上述功能。

本文档将介绍基于 CMake 的 ESP-IDF 构建系统的实现原理以及 组件等相关概念，此外 ESP-IDF 还支持基于 *GNU Make* 的构建系统。

如需您想了解如何使用 CMake 构建系统来组织和构建新的 ESP-IDF 项目或组件，请阅读本文档。

5.3.1 概述

一个 ESP-IDF 项目可以看作是多个不同组件的集合，例如一个显示当前湿度的网页服务器会包含以下组件：

- ESP32 基础库，包括 libc、ROM bindings 等
- Wi-Fi 驱动
- TCP/IP 协议栈
- FreeRTOS 操作系统
- 网页服务器
- 湿度传感器的驱动
- 负责将上述组件整合到一起的主程序

ESP-IDF 可以显式地指定和配置每个组件。在构建项目的时候，构建系统会前往 ESP-IDF 目录、项目目录和用户自定义目录（可选）中查找所有组件，允许用户通过文本菜单系统配置 ESP-IDF 项目中用到的每个组件。在所有组件配置结束后，构建系统开始编译整个项目。

概念

- 项目特指一个目录，其中包含了构建可执行应用程序所需的全部文件和配置，以及其他支持型文件，例如分区表、数据/文件系统分区和引导程序。
- 项目配置保存在项目根目录下名为 `sdkconfig` 的文件中，可以通过 `idf.py menuconfig` 进行修改，且一个项目只能包含一个项目配置。

- 应用程序是由 ESP-IDF 构建得到的可执行文件。一个项目通常会构建两个应用程序：项目应用程序（可执行的主文件，即用户自定义的固件）和引导程序（启动并初始化项目应用程序）。
- 组件是模块化且独立的代码，会被编译成静态库（.a 文件）并链接到应用程序。部分组件由 ESP-IDF 官方提供，其他组件则来源于其它开源项目。
- 目标特指运行构建后应用程序的硬件设备。ESP-IDF 当前仅支持 ESP32 这一个硬件目标。

请注意，以下内容并不属于项目的组成部分：

- ESP-IDF 并不是项目的一部分，它独立于项目，通过 IDF_PATH 环境变量（保存 esp-idf 目录的路径）链接到项目，从而将 IDF 框架与项目分离。
- 交叉编译工具链并不是项目的组成部分，它应该被安装在系统 PATH 环境变量中。

5.3.2 使用构建系统

idf.py

idf.py 命令行工具提供了一个前端，可以帮助您轻松管理项目的构建过程，它管理了以下工具：

- CMake，配置待构建的系统
- 命令行构建工具（Ninja 或 *GNU Make*）
- esptool.py，烧录 ESP32

入门指南 简要介绍了如何设置 idf.py 用于配置、构建并烧录项目。

idf.py 应运行在 ESP-IDF 的 项目目录下，即包含 CMakeLists.txt 文件的目录。仅包含 Makefile 的老式项目并不支持 idf.py。

运行 idf.py --help 查看完整的命令列表。下面总结了最常用的命令：

- idf.py menuconfig 会运行 menuconfig 工具来配置项目。
- idf.py build 会构建在当前目录下找到的项目，它包括以下步骤：
  - 根据需要创建 build 构建目录，它用于保存构建过程的输出文件，可以使用 -B 选项修改默认的构建目录。
  - 根据需要运行 CMake 配置命令，为主构建工具生成构建文件。
  - 运行主构建工具（Ninja 或 *GNU Make*）。默认情况下，构建工具会被自动检测，可以使用 -G 选项显式地指定构建工具。

  构建过程是增量式的，如果自上次构建以来源文件或项目配置没有发生改变，则不会执行任何操作。
- idf.py clean 会把构建输出的文件从构建目录中删除，从而清理整个项目。下次构建时会强制“重新完整构建”这个项目。清理时，不会删除 CMake 配置输出及其他文件。

- `idf.py fullclean` 会将整个 `build` 目录下的内容全部删除，包括所有 CMake 的配置输出文件。下次构建项目时，CMake 会从头开始配置项目。请注意，该命令会递归删除构建目录下的 *所有文件*，请谨慎使用。项目配置文件不会被删除。
- `idf.py flash` 会在必要时自动构建项目，并将生成的二进制程序烧录进 ESP32 设备中。`-p` 和 `-b` 选项可分别设置串口的设备名和烧录时的波特率。
- `idf.py monitor` 用于显示 ESP32 设备的串口输出。`-p` 选项可用于设置主机端串口的设备名，按下 `Ctrl-]` 可退出监视器。更多有关监视器的详情，请参阅*IDF Monitor*。

多个 `idf.py` 命令可合并成一个，例如，`idf.py -p COM4 clean flash monitor` 会依次清理源码树，构建项目，烧录进 ESP32 设备，最后运行串口监视器。

注解： 环境变量 `ESPPORT` 和 `ESPBAUD` 可分别用作 `-p` 和 `-b` 选项的默认值。在命令行中，重新为这两个选项赋值，会覆盖其默认值。

高级命令

- `idf.py app`，`idf.py bootloader`，`idf.py partition_table` 仅可用于从适用的项目中构建应用程序、引导程序或分区表。
- `idf.py app-flash` 等匹配命令，仅将项目的特定部分烧录至 ESP32。
- `idf.py -p PORT erase_flash` 会使用 esptool.py 擦除 ESP32 的整个 Flash。
- `idf.py size` 会打印应用程序相关的大小信息，`idf.py size-components` 和 `idf.py size-files` 这两个命令相似，分别用于打印每个组件或源文件的详细信息。
- `idf.py reconfigure` 命令会重新运行 CMake（即便无需重新运行）。正常使用时，并不需要运行此命令，但当源码树中添加/删除文件后或更改 CMake cache 变量时，此命令会非常有用，例如，`idf.py -DNAME='VALUE' reconfigure` 会将 CMake cache 中的变量 `NAME` 的值设置为 `VALUE`。

同时调用多个 `idf.py` 命令时，命令的输入顺序并不重要，它们会按照正确的顺序依次执行，并保证每一条命令都生效（即先构建后烧录，先擦除后烧录等）。

直接使用 CMake

为了方便，*idf.py* 已经封装了 CMake 命令，但是您愿意，也可以直接调用 CMake。

当 `idf.py` 在执行某些操作时，它会打印出其运行的每条命令以便参考。例如运行 `idf.py build` 命令与在 bash shell（或者 Windows Command Prompt）中运行以下命令是相同的:

```
mkdir -p build
cd build
```

（下页继续）

(续上页)

```
cmake .. -G Ninja   # 或者 'Unix Makefiles'
ninja
```

在上面的命令列表中，cmake 命令对项目进行配置，并生成用于最终构建工具的构建文件。在这个例子中，最终构建工具是 Ninja: 运行 ninja 来构建项目。

没有必要多次运行 cmake。第一次构建后，往后每次只需运行 ninja 即可。如果项目需要重新配置，ninja 会自动重新调用 cmake。

若在 CMake 中使用 ninja 或 make，则多数 idf.py 子命令也会有其对应的目标，例如在构建目录下运行 make menuconfig 或 ninja menuconfig 与运行 idf.py menuconfig 是相同的。

注解： 如果您已经熟悉了 CMake，那么可能会发现 ESP-IDF 的 CMake 构建系统不同寻常，为了减少样板文件，该系统封装了 CMake 的许多功能。请参考*编写纯 CMake 组件* 以编写更多 CMake 风格的组件。

使用 Ninja/Make 来烧录

您可以直接使用 ninja 或 make 运行如下命令来构建项目并烧录:

```
ninja flash
```

或:

```
make app-flash
```

可用的目标还包括：flash、app-flash （仅用于 app）、bootloader-flash （仅用于 bootloader）。

以这种方式烧录时，可以通过设置 ESPPORT 和 ESPBAUD 环境变量来指定串口设备和波特率。您可以在操作系统或 IDE 项目中设置该环境变量，或者直接在命令行中进行设置:

```
ESPPORT=/dev/ttyUSB0 ninja flash
```

注解： 在命令的开头为环境变量赋值属于 Bash shell 的语法，可在 Linux 、macOS 和 Windows 的类 Bash shell 中运行，但在 Windows Command Prompt 中无法运行。

或:

```
make -j3 app-flash ESPPORT=COM4 ESPBAUD=2000000
```

注解: 在命令末尾为变量赋值属于 make 的语法，适用于所有平台的 make。

在 IDE 中使用 CMake

您还可以使用集成了 CMake 的 IDE，仅需将项目 CMakeLists.txt 文件的路径告诉 IDE 即可。集成 CMake 的 IDE 通常会有自己的构建工具（CMake 称之为“生成器”），它是组成 IDE 的一部分，用来构建源文件。

向 IDE 中添加除 build 目标以外的自定义目标（如添加“Flash”目标到 IDE）时，建议调用 idf.py 命令来执行这些“特殊”的操作。

有关将 ESP-IDF 同 CMake 集成到 IDE 中的详细信息，请参阅构建系统的元数据。

设置 Python 解释器

目前，ESP-IDF 仅适用于 Python 2.7，如果系统中默认的 python 解释器是 Python 3.x，可能会出现问题。

如果使用了 idf.py，并以 python2 $IDF_PATH/tools/idf.py ... 的方式运行 idf.py 则会解决这个问题（idf.py 会通知其余 Python 进程使用相同的 Python 解释器）。你可以通过设置 shell 别名或其他脚本来简化该命令。

如果直接使用 CMake，运行 cmake -D PYTHON=python2 ...，CMake 会使用传入的值覆盖默认的 Python 解释器。

如果使用集成 CMake 的 IDE，可以在 IDE 的图形用户界面中给名为 PYTHON 的 CMake cache 变量设置新的值来覆盖默认的 Python 解释器。

如果想在命令行中更优雅地管理 Python 的各个版本，请查看 pyenv 或 virtualenv 工具，它们会帮助您更改默认的 python 版本。

5.3.3 示例项目

示例项目的目录树结构可能如下所示:

```
- myProject/
             - CMakeLists.txt
             - sdkconfig
             - components/ - component1/ - CMakeLists.txt
                                         - Kconfig
                                         - src1.c
                           - component2/ - CMakeLists.txt
                                         - Kconfig
                                         - src1.c
```

(下页继续)

(续上页)

```
                                    - include/ - component2.h
        - main/       - src1.c
                      - src2.c
        - build/
```

该示例项目 myproject 包含以下组成部分：

- 顶层项目 CMakeLists.txt 文件，这是 CMake 用于学习如何构建项目的主要文件，可以在这个文件中设置项目全局的 CMake 变量。顶层项目 CMakeLists.txt 文件会导入 /tools/cmake/project.cmake 文件，由它负责实现构建系统的其余部分。该文件最后会设置项目的名称，并定义该项目。
- sdkconfig 项目配置文件，执行 idf.py menuconfig 时会创建或更新此文件，文件中保存了项目中所有组件（包括 ESP-IDF 本身）的配置信息。sdkconfig 文件可能会也可能不会被添加到项目的源码管理系统中。
- 可选的 component 目录中包含了项目的部分自定义组件，并不是每个项目都需要这种自定义组件，但它组件有助于构建可复用的代码或者导入第三方（不属于 ESP-IDF）的组件。
- main 目录是一个特殊的 *伪组件*，包含项目本身的源代码。main 是默认名称，CMake 变量 COMPONENT_DIRS 默认包含此组件，但您可以修改此变量。或者，您也可以在顶层 CMakeLists.txt 中设置 EXTRA_COMPONENT_DIRS 变量以查找其他指定位置处的组件。有关详细信息，请参阅*重命名 main 组件*。如果项目中源文件较多，建议将其归于组件中，而不是全部放在 main 中。
- build 目录是存放构建输出的地方，如果没有此目录，idf.py 会自动创建。CMake 会配置项目，并在此目录下生成临时的构建文件。随后，在主构建进程的运行期间，该目录还会保存临时目标文件、库文件以及最终输出的二进制文件。此目录通常不会添加到项目的源码管理系统中，也不会随项目源码一同发布。

每个组件目录都包含一个 CMakeLists.txt 文件，里面会定义一些变量以控制该组件的构建过程，以及其与整个项目的集成。更多详细信息请参阅*组件 CMakeLists 文件*。

每个组件还可以包含一个 Kconfig 文件，它用于定义 menuconfig 时展示的*组件配置* 选项。某些组件可能还会包含 Kconfig.projbuild 和 project_include.cmake 特殊文件，它们用于*覆盖项目的部分设置*。

5.3.4 项目 CMakeLists 文件

每个项目都有一个顶层 CMakeLists.txt 文件，包含整个项目的构建设置。默认情况下，项目 CMakeLists 文件会非常小。

最小 CMakeLists 文件示例

最小项目：

```
cmake_minimum_required(VERSION 3.5)
include($ENV{IDF_PATH}/tools/cmake/project.cmake)
project(myProject)
```

必要部分

每个项目都要按照上面显示的顺序添加上述三行代码：

- `cmake_minimum_required(VERSION 3.5)` 必须放在 CMakeLists.txt 文件的第一行，它会告诉 CMake 构建该项目所需要的最小版本号。ESP-IDF 支持 CMake 3.5 或更高的版本。
- `include($ENV{IDF_PATH}/tools/cmake/project.cmake)` 会导入 CMake 的其余功能来完成配置项目、检索组件等任务。
- `project(myProject)` 会创建项目本身，并指定项目名称。该名称会作为最终输出的二进制文件的名字，即 `myProject.elf` 和 `myProject.bin`。每个 CMakeLists 文件只能定义一个项目。

可选的项目变量

以下这些变量都有默认值，用户可以覆盖这些变量值以自定义构建行为。更多实现细节，请参阅 /tools/cmake/project.cmake 文件。

- `COMPONENT_DIRS`：组件的搜索目录，默认为 `${IDF_PATH}/components`、`${PROJECT_PATH}/components` 和 `EXTRA_COMPONENT_DIRS`。如果您不想在这些位置搜索组件，请覆盖此变量。
- `EXTRA_COMPONENT_DIRS`：用于搜索组件的其它可选目录列表。路径可以是相对于项目目录的相对路径，也可以是绝对路径。
- `COMPONENTS`：要构建进项目中的组件名称列表，默认为 `COMPONENT_DIRS` 目录下检索到的所有组件。使用此变量可以“精简”项目以缩短构建时间。请注意，如果一个组件通过 `COMPONENT_REQUIRES` 指定了它依赖的另一个组件，则会自动将其添加到 `COMPONENTS` 中，所以 `COMPONENTS` 列表可能会非常短。
- `COMPONENT_REQUIRES_COMMON`：每个组件都需要的通用组件列表，这些通用组件会自动添加到每个组件的 `COMPONENT_PRIV_REQUIRES` 列表中以及项目的 `COMPONENTS` 列表中。默认情况下，此变量设置为 ESP-IDF 项目所需的最小核心“系统”组件集。通常您无需在项目中更改此变量。

以上变量中的路径可以是绝对路径，或者是相对于项目目录的相对路径。

请使用 cmake 中的 set 命令 来设置这些变量，即 `set(VARIABLE "VALUE")`。请注意，`set()` 命令需放在 `include(...)` 之前，`cmake_minimum(...)` 之后。

重命名 `main` 组件

构建系统会对 `main` 组件进行特殊处理。假如 `main` 组件位于预期的位置（即 *${PROJECT_PATH}/main*），那么它会被自动添加到构建系统中。其他组件也会作为其依赖项被添加到构建系统中，这使用户免于处理依

赖关系，并提供即时可用的构建功能。重命名 `main` 组件会减轻上述这些幕后工作量，但要求用户指定重命名后的组件位置，并手动为其添加依赖项。重命名 `main` 组件的步骤如下：

1. 重命名 `main` 目录。
2. 在项目 CMakeLists.txt 文件中设置 `EXTRA_COMPONENT_DIRS`，并添加重命名后的 `main` 目录。
3. 在组件的 CMakeLists.txt 文件中设置 `COMPONENT_REQUIRES` 或 `COMPONENT_PRIV_REQUIRES` 以指定依赖项。

5.3.5 组件 CMakeLists 文件

每个项目都包含一个或多个组件，这些组件可以是 ESP-IDF 的一部分，可以是项目自身组件目录的一部分，也可以从自定义组件目录添加（见上文）。

组件是 `COMPONENT_DIRS` 列表中包含 `CMakeLists.txt` 文件的任何目录。

搜索组件

搜索 `COMPONENT_DIRS` 中的目录列表以查找项目的组件，此列表中的目录可以是组件自身（即包含 *CMakeLists.txt* 文件的目录），也可以是子目录为组件的顶级目录。

当 CMake 运行项目配置时，它会记录本次构建包含的组件列表，它可用于调试某些组件的添加/排除。

同名组件

ESP-IDF 在搜索所有待构建的组件时，会按照 `COMPONENT_DIRS` 指定的顺序依次进行，这意味着在默认情况下，首先搜索 ESP-IDF 内部组件，然后是项目组件，最后是 `EXTRA_COMPONENT_DIRS` 中的组件。如果这些目录中的两个或者多个包含具有相同名字的组件，则使用搜索到的最后一个位置的组件。这就允许将组件复制到项目目录中再修改以覆盖 ESP-IDF 组件，如果使用这种方式，ESP-IDF 目录本身可以保持不变。

最小的组件 CMakeLists 文件

最小组件 `CMakeLists.txt` 文件内容如下：

```
set(COMPONENT_SRCS "foo.c")
set(COMPONENT_ADD_INCLUDEDIRS "include")
register_component()
```

- `COMPONENT_SRCS` 是用空格分隔的源文件列表（`*.c`，`*.cpp`，`*.cc`，`*.S`），里面所有的源文件都将会编译进组件库中。
- `COMPONENT_ADD_INCLUDEDIRS` 是用空格分隔的目录列表，里面的路径会被添加到所有需要该组件的组件（包括 main 组件）全局 include 搜索路径中。

- `register_component()` 使用上述设置的变量将组件添加到构建系统中，构建生成与组件同名的库，并最终被链接到应用程序中。如果因为使用了 CMake 中的 if 命令 或类似命令而跳过了这一步，那么该组件将不会被添加到构建系统中。

上述目录通常设置为相对于 `CMakeLists.txt` 文件的相对路径，当然也可以设置为绝对路径。

有关更完整的 `CMakeLists.txt` 示例，请参阅组件 *CMakeLists 示例*。

预设的组件变量

以下专用于组件的变量可以在组件 CMakeLists 中使用，但不建议修改：

- `COMPONENT_PATH`：组件目录，即包含 `CMakeLists.txt` 文件的绝对路径，它与 `CMAKE_CURRENT_SOURCE_DIR` 变量一样，路径中不能包含空格。
- `COMPONENT_NAME`：组件名，与组件目录名相同。
- `COMPONENT_TARGET`：库目标名，它由构建系统在内部为组件创建。

以下变量在项目级别中被设置，但可在组件 CMakeLists 中使用：

- `PROJECT_NAME`：项目名，在项目 CMakeLists.txt 文件中设置。
- `PROJECT_PATH`：项目目录（包含项目 CMakeLists 文件）的绝对路径，与 `CMAKE_SOURCE_DIR` 变量相同。
- `COMPONENTS`：此次构建中包含的所有组件的名称，具体格式为用分号隔开的 CMake 列表。
- `CONFIG_*`：项目配置中的每个值在 cmake 中都对应一个以 `CONFIG_` 开头的变量。更多详细信息请参阅*Kconfig*。
- `IDF_VER`：ESP-IDF 的 git 版本号，由 `git describe` 命令生成。
- `IDF_VERSION_MAJOR`, `IDF_VERSION_MINOR`, `IDF_VERSION_PATCH`: ESP-IDF 的组件版本，可用于条件表达式。请注意这些信息的精确度不如 `IDF_VER` 变量，版本号 `v4.0-dev-*`，`v4.0-beta1`，`v4.0-rc1` 和 `v4.0` 对应的 `IDF_VERSION_*` 变量值是相同的，但是 `IDF_VER` 的值是不同的。
- `IDF_TARGET`：项目的硬件目标名称。
- `PROJECT_VER`：项目版本号。
  - 如果在项目 CMakeLists.txt 文件中设置了 `PROJECT_VER` 变量，则该变量值可以使用。
  - 或者，如果 `${PROJECT_PATH}/version.txt` 文件存在，其内容会用作 `PROJECT_VER` 的值。
  - 或者，如果项目位于某个 Git 仓库中，则使用 `git describe` 命令的输出作为 `PROJECT_VER` 的值。
  - 否则，`PROJECT_VER` 的值为空。

如果您在组件的 `CMakeLists.txt` 中修改以上变量，并不会影响其他组件的构建，但可能会使该组件变得难以构建或调试。

- COMPONENT_ADD_INCLUDEDIRS：相对于组件目录的相对路径，为被添加到所有需要该组件的其他组件的全局 include 搜索路径中。如果某个 include 路径仅仅在编译当前组件时需要，请将其添加到 COMPONENT_PRIV_INCLUDEDIRS 中。
- COMPONENT_REQUIRES 是一个用空格分隔的组件列表，列出了当前组件依赖的其他组件。如果当前组件有一个头文件位于 COMPONENT_ADD_INCLUDEDIRS 目录下，且该头文件包含了另一个组件的头文件，那么这个被依赖的组件需要在 COMPONENT_REQUIRES 中指出。这种依赖关系可以是递归的。

  COMPONENT_REQUIRES 可以为空，因为所有的组件都需要一些常用的组件（如 newlib 组件提供的 libc 库、freertos 组件提供的 RTOS 功能），这些通用组件已经在项目级变量 COMPONENT_REQUIRES_COMMON 中被设置。

  如果一个组件仅需要额外组件的头文件来编译其源文件（而不是全局引入它们的头文件），则这些被依赖的组件需要在 COMPONENT_PRIV_REQUIRES 中指出。

  请参阅组件依赖，查看详细信息。

可选的组件特定变量

以下变量可在 CMakeLists.txt 中进行设置，用以控制该组件的构建行为：

- COMPONENT_PRIV_INCLUDEDIRS：相对于组件目录的相对路径，仅会被添加到该组件的 include 搜索路径中。
- COMPONENT_PRIV_REQUIRES：以空格分隔的组件列表，用于编译或链接当前组件的源文件。这些组件的头文件路径不会传递给其余需要它的组件，仅用于编译当前组件的源代码。更多详细信息请参阅组件依赖。
- COMPONENT_SRCS：要编译进当前组件的源文件的路径，推荐使用此方法向构建系统中添加源文件。
- COMPONENT_SRCDIRS：相对于组件目录的源文件目录路径，用于搜索源文件（*.cpp，*.c，*.S）。匹配成功的源文件会替代 COMPONENT_SRCS 中指定的源文件，进而被编译进组件。即设置 COMPONENT_SRCDIRS 会导致 COMPONENT_SRCS 会被忽略。此方法可以很容易地将源文件整体导入到组件中，但并不推荐使用（详情请参阅文件通配符 & 增量构建）。
- COMPONENT_SRCEXCLUDE：需要从组件中剔除的源文件路径。当某个目录中有大量的源文件需要被导入组件中，但同时又有个别文件不需要导入时，可以配合 COMPONENT_SRCDIRS 变量一起设置。路径可以是相对于组件目录的相对路径，也可以是绝对路径。
- COMPONENT_ADD_LDFRAGMENTS：组件使用的链接片段文件的路径，用于自动生成链接器脚本文件。详细信息请参阅链接脚本生成机制。

注解： 如果没有设置 COMPONENT_SRCDIRS 或 COMPONENT_SRCS，组件不会被编译成库文件，但仍可以被添加到 include 路径中，以便在编译其他组件时使用。

组件编译控制

在编译特定组件的源文件时，可以使用 `component_compile_options` 命令来传递编译器选项:

```
component_compile_options(-Wno-unused-variable)
```

这条命令封装了 CMake 的 target_compile_options 命令。

如果给单个源文件指定编译器标志，可以使用 CMake 的 set_source_files_properties 命令:

```
set_source_files_properties(mysrc.c
    PROPERTIES COMPILE_FLAGS
    -Wno-unused-variable
)
```

如果上游代码在编译的时候发出了警告，那这么做可能会很有效。

请注意，上述两条命令只能在组件 CMakeLists 文件的 `register_component()` 命令之后调用。

5.3.6 组件配置

每个组件都可以包含一个 `Kconfig` 文件，和 `CMakeLists.txt` 放在同一目录下。`Kconfig` 文件中包含要添加到该组件配置菜单中的一些配置设置信息。

运行 menuconfig 时，可以在 `Component Settings` 菜单栏下找到这些设置。

创建一个组件的 Kconfig 文件，最简单的方法就是使用 ESP-IDF 中现有的 Kconfig 文件作为模板，在这基础上进行修改。

有关示例请参阅添加条件配置。

5.3.7 预处理器定义

ESP-IDF 构建系统会在命令行中添加以下 C 预处理器定义:

- `ESP_PLATFORM`: 可以用来检测在 ESP-IDF 内发生了构建行为。
- `IDF_VER`: 定义 git 版本字符串，例如: `v2.0` 用于标记已发布的版本，`v1.0-275-g0efaa4f` 则用于标记任意某次的提交记录。
- `PROJECT_VER`: 项目版本号，详细信息请参阅预设的组件变量。
- `PROJECT_NAME`: 项目名称，定义在项目 CMakeLists.txt 文件中。

5.3.8 组件依赖

编译各个组件时，ESP-IDF 系统会递归评估其组件。

每个组件的源文件都会使用以下路径中的头文件进行编译:

- 当前组件的 COMPONENT_ADD_INCLUDEDIRS 和 COMPONENT_PRIV_INCLUDEDIRS。
- 当前组件的 COMPONENT_REQUIRES 和 COMPONENT_PRIV_REQUIRES 变量指定的其他组件（即当前组件的所有公共和私有依赖项）所设置的 COMPONENT_ADD_INCLUDEDIRS。
- 所有组件的 COMPONENT_REQUIRES 做递归操作，即该组件递归运算后的所有公共依赖项。

编写组件

- COMPONENT_REQUIRES 需要包含所有被当前组件的公共头文件 *#include* 的头文件所在的组件。
- COMPONENT_PRIV_REQUIRES 需要包含被当前组件的源文件 *#include* 的头文件所在的组件（除非已经被设置在了 COMPONENT_PRIV_REQUIRES 中）。或者是当前组件正常工作必须要链接的组件。
- COMPONENT_REQUIRES、COMPONENT_PRIV_REQUIRES 需要在调用 register_component() 之前设置。
- COMPONENT_REQUIRES 和 COMPONENT_PRIV_REQUIRES 的值不能依赖于任何配置选项（CONFIG_xxx），这是因为在配置加载之前，依赖关系就已经被展开。其它组件变量（比如 COMPONENT_SRCS 和 COMPONENT_ADD_INCLUDEDIRS）可以依赖配置选择。
- 如果当前组件除了 COMPONENT_REQUIRES_COMMON 中设置的通用组件（比如 RTOS、libc 等）外，并不依赖其它组件，那么上述两个 REQUIRES 变量可以为空。

如果组件仅支持某些硬件目标（即依赖于特定的 IDF_TARGET），则可以调用 require_idf_targets(NAMES...) CMake 函数来声明这个需求。在这种情况下，如果构建系统导入了不支持当前硬件目标的组件时就会报错。

创建项目

- 默认情况下，每个组件都会包含在构建系统中。
- 如果将 COMPONENTS 变量设置为项目直接使用的最小组件列表，那么构建系统会导入:
  - COMPONENTS 中明确提及的组件。
  - 这些组件的依赖项（以及递归运算后的组件）。
  - 每个组件都依赖的通用组件。
- 将 COMPONENTS 设置为所需组件的最小列表，可以显著减少项目的构建时间。

构建系统中依赖处理的实现细节

- 在 CMake 配置进程的早期阶段会运行 expand_requirements.cmake 脚本。该脚本会对所有组件的 CMakeLists.txt 文件进行局部的运算，得到一张组件依赖关系图（此图可能会有闭环）。此图用于在构建目录中生成 component_depends.cmake 文件。

- CMake 主进程会导入该文件，并以此来确定要包含到构建系统中的组件列表（内部使用的 BUILD_COMPONENTS 变量）。BUILD_COMPONENTS 变量已排好序，依赖组件会排在前面。由于组件依赖关系图中可能存在闭环，因此不能保证每个组件都满足该排序规则。如果给定相同的组件集和依赖关系，那么最终的排序结果应该是确定的。
- CMake 会将 BUILD_COMPONENTS 的值以 “Component names:” 的形式打印出来。
- 然后执行构建系统中包含的每个组件的配置。
- 每个组件都被正常包含在构建系统中，然后再次执行 CMakeLists.txt 文件，将组件库加入构建系统。

组件依赖顺序

BUILD_COMPONENTS 变量中组件的顺序决定了构建过程中的其它顺序，包括：

- 项目导入*project_include.cmake* 文件的顺序。
- 生成用于编译（通过 -I 参数）的头文件路径列表的顺序。请注意，对于给定组件的源文件，仅需将该组件的依赖组件的头文件路径告知编译器。
- 组件目标归档文件传递给链接器的顺序。请注意，构建系统还会将 --start-group 和 --end-group 传递给链接器，以允许链接依赖存在闭环，但其基本顺序还是由 BUILD_COMPONENTS 决定的。

5.3.9 构建的内部过程

关于 CMake 以及 CMake 命令的详细信息，请参阅 CMake v3.5 官方文档 。

project.cmake 的内容

当项目 CMakeLists 文件导入 project.cmake 文件时，project.cmake 会定义一些实用的模块和全局变量。如果系统环境中没有设置 IDF_PATH，那么它还会自动设置 IDF_PATH 变量。

project.cmake 文件还重写了 CMake 内置的 project 函数，以添加所有 ESP-IDF 项目特有的功能。

project 函数

自定义的 project() 函数会执行以下步骤：

- 确定硬件目标（由 IDF_TARGET 环境变量设置），并将其保存在 CMake cache 中。如果环境变量中设置的硬件目标与 CMake cache 中的不匹配，则会报错并退出。
- 计算组件依赖，并构造 BUILD_COMPONENTS 变量，它是包含所有需要导入到构建系统中的组件列表（详情请见上文）。
- 查找项目中所有的组件（搜索 COMPONENT_DIRS，并按 COMPONENTS 进行过滤（前提是设置了该变量）。

- 从 sdkconfig 文件中加载项目配置信息，生成 sdkconfig.cmake 和 sdkconfig.h 文件，分别用在 CMake 和 C/C++ 中定义配置项。如果项目配置发生了更改，CMake 会自动重新运行，重新生成上述两个文件，接着重新配置项目。
- 根据硬件目标（IDF_TARGET）的值，将 CMAKE_TOOLCHAIN_FILE 变量设置为相应的工具链文件。
- 调用 CMake 的 project 函数 声明实际的 CMake-level 项目。
- 加载 git 版本号。如果在 git 中检出了新的版本，就会使用一些技巧重新运行 CMake。详情请参考文件通配符 & 增量构建。
- 从包含有*project_include.cmake* 文件的组件中导入该文件。
- 将每个组件都添加到构建系统中。每个组件的 CMakeLists 文件都会调用 register_component 函数，它会调用 CMake 的 add_library 函数来添加一个库，然后添加源文件、编译选项等。
- 将最终的应用程序可执行文件添加到构建系统中。
- 返回并为组件之间指定依赖关系（将每个组件的公共头文件目录添加到其他组件中）。

更多详细信息请参阅 /tools/cmake/project.cmake 文件和 /tools/cmake/idf_functions.cmake 文件。

CMake 调试

调试 ESP-IDF CMake 构建系统的一些技巧：

- CMake 运行时，会打印大量诊断信息，包括组件列表和组件路径。
- 运行 cmake -DDEBUG=1，IDF 构建系统会生成更详细的诊断输出。
- 运行 cmake 时指定 --trace 或 --trace-expand 选项会提供大量有关控制流信息。详情请参考 CMake 命令行文档。

警告未定义的变量

默认情况下，idf.py 在调用 CMake 时会给它传递 --warn-uninitialized 标志，如果在构建的过程中引用了未定义的变量，CMake 会打印警告。这对查找有错误的 CMake 文件非常有用。

如果您不想启用此功能，可以给 idf.py 传递 --no-warnings 标志。

覆盖项目的部分设置

project_include.cmake

如果组件的某些构建行为需要在组件 CMakeLists 文件之前被执行，您可以在组件目录下创建名为 project_include.cmake 的文件，project.cmake 在运行过程中会导入此 CMake 文件。

project_include.cmake 文件在 ESP-IDF 内部使用，以定义项目范围内的构建功能，比如 esptool.py 的命令行参数和 bootloader 这个特殊的应用程序。

与组件 CMakeLists.txt 文件有所不同，在导入 "project_include.cmake" 文件的时候，当前源文件目录（即 CMAKE_CURRENT_SOURCE_DIR）和工作目录为项目目录。如果想获得当前组件的绝对路径，可以使用 COMPONENT_PATH 变量。

请注意，project_include.cmake 对于大多数常见的组件并不是必需的。例如给项目添加 include 搜索目录，给最终的链接步骤添加 LDFLAGS 选项等等都可以通过 CMakeLists.txt 文件来自定义。详细信息请参考可选的项目变量。

project_include.cmake 文件会按照 BUILD_COMPONENTS 变量中组件的顺序（由 CMake 记录）依次导入。即只有在当前组件所有依赖组件的 project_include.cmake 文件都被导入后，当前组件的 project_include.cmake 文件才会被导入，除非两个组件在同一个依赖闭环中。如果某个 project_include.cmake 文件依赖于另一组件设置的变量，则要特别注意上述情况。更多详情请参阅构建系统中依赖处理的实现细节。

在 project_include.cmake 文件中设置变量或目标时要格外小心，这些值被包含在项目的顶层 CMake 文件中，因此他们会影响或破坏所有组件的功能。

KConfig.projbuild

与 project_include.cmake 类似，也可以为组件定义一个 KConfig 文件以实现全局的组件配置。如果要在 menuconfig 的顶层添加配置选项，而不是在 "Component Configuration" 子菜单中，则可以在 CMakeLists.txt 文件所在目录的 KConfig.projbuild 文件中定义这些选项。

在此文件中添加配置时要小心，因为这些配置会包含在整个项目配置中。在可能的情况下，请为组件配置 创建 KConfig 文件。

仅配置组件

仅配置组件是一类不包含源文件的特殊组件，仅包含 Kconfig.projbuild、KConfig 和 CMakeLists.txt 文件，该 CMakeLists.txt 文件仅有一行代码，调用了 register_config_only_component() 函数。此函数会将组件导入到项目构建中，但不会构建任何库，也不会将头文件添加到任何 include 搜索路径中。

如果 CMakeLists.txt 文件没有调用 register_component() 或 register_config_only_component()，那么该文件将会被排除在项目构建之外。根据项目的配置，有时可能需要这么做。

5.3.10 组件 CMakeLists 示例

因为构建环境试图设置大多数情况都能工作的合理默认值，所以组件 CMakeLists.txt 文件可能非常小，甚至是空的，请参考最小的组件 *CMakeLists* 文件。但有些功能往往需要覆盖预设的组件变量 才能实现。

以下是组件 CMakeLists 文件的更高级的示例。

添加条件配置

配置系统可用于根据项目配置中选择的选项有条件地编译某些文件。

Kconfig:

```
config FOO_ENABLE_BAR
    bool "Enable the BAR feature."
    help
        This enables the BAR feature of the FOO component.
```

CMakeLists.txt:

```
set(COMPONENT_SRCS "foo.c" "more_foo.c")

if(CONFIG_FOO_ENABLE_BAR)
    list(APPEND COMPONENT_SRCS "bar.c")
endif()
```

上述示例使用了 CMake 的 if 函数和 list APPEND 函数。

也可用于选择或删除某一实现，如下所示：

Kconfig:

```
config ENABLE_LCD_OUTPUT
    bool "Enable LCD output."
    help
        Select this if your board has a LCD.

config ENABLE_LCD_CONSOLE
    bool "Output console text to LCD"
    depends on ENABLE_LCD_OUTPUT
    help
        Select this to output debugging output to the lcd

config ENABLE_LCD_PLOT
    bool "Output temperature plots to LCD"
    depends on ENABLE_LCD_OUTPUT
    help
        Select this to output temperature plots
```

CMakeLists.txt:

```
if(CONFIG_ENABLE_LCD_OUTPUT)
    set(COMPONENT_SRCS lcd-real.c lcd-spi.c)
else()
    set(COMPONENT_SRCS lcd-dummy.c)
```

(下页继续)

(续上页)

```
endif()

# 如果启用了控制台或绘图功能，则需要加入字体
if(CONFIG_ENABLE_LCD_CONSOLE OR CONFIG_ENABLE_LCD_PLOT)
    list(APPEND COMPONENT_SRCS "font.c")
endif()
```

硬件目标的的条件判断

CMake 文件可以使用 `IDF_TARGET` 变量来获取当前的硬件目标。

此外，如果当前的硬件目标是 `xyz``（即 ``IDF_TARGET=xyz`），那么 Kconfig 变量 `CONFIG_IDF_TARGET_XYZ` 同样也会被设置。

请注意，组件可以依赖 `IDF_TARGET` 变量，但不能依赖这个 Kconfig 变量。同样也不可在 CMake 文件的 `include` 语句中使用 Kconfig 变量，在这种上下文中可以使用 `IDF_TARGET`。

生成源代码

有些组件的源文件可能并不是由组件本身提供，而必须从另外的文件生成。假设组件需要一个头文件，该文件由 BMP 文件转换后（使用 bmp2h 工具）的二进制数据组成，然后将头文件包含在名为 graphics_lib.c 的文件中:

```
add_custom_command(OUTPUT logo.h
    COMMAND bmp2h -i ${COMPONENT_PATH}/logo.bmp -o log.h
    DEPENDS ${COMPONENT_PATH}/logo.bmp
    VERBATIM)

add_custom_target(logo DEPENDS logo.h)
add_dependencies(${COMPONENT_TARGET} logo)

set_property(DIRECTORY "${COMPONENT_PATH}" APPEND PROPERTY
    ADDITIONAL_MAKE_CLEAN_FILES logo.h)
```

这个示例改编自 CMake 的一则 FAQ，其中还包含了一些同样适用于 ESP-IDF 构建系统的示例。

这个示例会在当前目录（构建目录）中生成 logo.h 文件，而 logo.bmp 会随组件一起提供在组件目录中。因为 logo.h 是一个新生成的文件，一旦项目需要清理，该文件也应该要被清除。因此，要将该文件添加到 ADDITIONAL_MAKE_CLEAN_FILES 属性中。

注解: 如果需要生成文件作为项目 CMakeLists.txt 的一部分，而不是作为组件 CMakeLists.txt 的一部分，此时需要使用 `${PROJECT_PATH}` 替代 `${COMPONENT_PATH}`，使用 `${PROJECT_NAME}.elf` 替代

${COMPONENT_TARGET}。

如果某个源文件是从其他组件中生成，且包含 logo.h 文件，则需要调用 add_dependencies，在这两个组件之间添加一个依赖项，以确保组件源文件按照正确顺序进行编译。

嵌入二进制数据

有时您的组件希望使用一个二进制文件或者文本文件，但是您又不希望将它们重新格式化为 C 源文件，这时，您可以在组件 CMakeLists 中添加 COMPONENT_EMBED_FILES 变量，指定要嵌入的文件名称（以空格分隔）：

```
set(COMPONENT_EMBED_FILES server_root_cert.der)
```

或者，如果文件是字符串，则可以设置 COMPONENT_EMBED_TXTFILES 变量，把文件的内容转成以 null 结尾的字符串嵌入:

```
set(COMPONENT_EMBED_TXTFILES server_root_cert.pem)
```

文件的内容会被添加到 Flash 的.rodata 段，用户可以通过符号名来访问，如下所示:

```
extern const uint8_t server_root_cert_pem_start[] asm("_binary_server_root_cert_pem_start
↪");
extern const uint8_t server_root_cert_pem_end[]   asm("_binary_server_root_cert_pem_end
↪");
```

符号名会根据文件全名生成，如 COMPONENT_EMBED_FILES 中所示，字符 /、. 等都会被下划线替代。符号名称中的 _binary 前缀由 objcopy 命令添加，对文本文件和二进制文件都是如此。

如果要将文件嵌入到项目中，而非组件中，可以调用 target_add_binary_data 函数:

```
target_add_binary_data(myproject.elf "main/data.bin" TEXT)
```

并这行代码放在项目 CMakeLists.txt 的 project() 命令之后，修改 myproject.elf 为你自己的项目名。如果最后一个参数是 TEXT，那么构建系统会嵌入以 null 结尾的字符串，如果最后一个参数被设置为 BINARY，则将文件内容按照原样嵌入。

有关使用此技术的示例，请参考 protocols/https_request，证书文件的内容会在编译时从.pem 文件中加载。

代码和数据的存放

ESP-IDF 还支持自动生成链接脚本，它允许组件通过链接片段文件定义其代码和数据在内存中的存放位置。构建系统会处理这些链接片段文件，并将处理后的结果扩充进链接脚本，从而指导应用程序二进制文件的链接过程。更多详细信息与快速上手指南，请参阅链接脚本生成机制。

完全覆盖组件的构建过程

当然，在有些情况下，上面提到的方法不一定够用。如果组件封装了另一个第三方组件，而这个第三方组件并不能直接在 ESP-IDF 的构建系统中工作，在这种情况下，就需要放弃 ESP-IDF 的构建系统，改为使用 CMake 的 ExternalProject 功能。组件 CMakeLists 示例如下:

```
# 用于 quirc 的外部构建过程，在源目录中运行并生成 libquirc.a
externalproject_add(quirc_build
    PREFIX ${COMPONENT_PATH}
    SOURCE_DIR ${COMPONENT_PATH}/quirc
    CONFIGURE_COMMAND ""
    BUILD_IN_SOURCE 1
    BUILD_COMMAND make CC=${CMAKE_C_COMPILER} libquirc.a
    INSTALL_COMMAND ""
    )

# 将 libquirc.a 添加到构建系统中
add_library(quirc STATIC IMPORTED GLOBAL)
add_dependencies(quirc quirc_build)

set_target_properties(quirc PROPERTIES IMPORTED_LOCATION
    ${COMPONENT_PATH}/quirc/libquirc.a)
set_target_properties(quirc PROPERTIES INTERFACE_INCLUDE_DIRECTORIES
    ${COMPONENT_PATH}/quirc/lib)

set_directory_properties( PROPERTIES ADDITIONAL_MAKE_CLEAN_FILES
    "${COMPONENT_PATH}/quirc/libquirc.a")
```

（上述 CMakeLists.txt 可用于创建名为 `quirc` 的组件，该组件使用自己的 Makefile 构建 quirc 项目。）

- `externalproject_add` 定义了一个外部构建系统。
  - 设置 `SOURCE_DIR`、`CONFIGURE_COMMAND`、`BUILD_COMMAND` 和 `INSTALL_COMMAND`。如果外部构建系统没有配置这一步骤，可以将 `CONFIGURE_COMMAND` 设置为空字符串。在 ESP-IDF 的构建系统中，一般会将 `INSTALL_COMMAND` 变量设置为空。
  - 设置 `BUILD_IN_SOURCE`，即构建目录与源目录相同。否则，您也可以设置 `BUILD_DIR` 变量。
  - 有关 `externalproject_add()` 命令的详细信息，请参阅 ExternalProject。
- 第二组命令添加了一个目标库，指向外部构建系统生成的库文件。为了添加 include 目录，并告知 CMake 该文件的位置，需要再设置一些属性。
- 最后，生成的库被添加到 ADDITIONAL_MAKE_CLEAN_FILES 中。即执行 `make clean` 后会删除该库。请注意，构建系统中的其他目标文件不会被删除。

注解： 当外部构建系统使用 PSRAM 时，请记得将 `-mfix-esp32-psram-cache-issue` 添加到 C 编译器的参数中。关于该标志的更多详细信息，请参考*CONFIG_SPIRAM_CACHE_WORKAROUND*。

ExternalProject 的依赖与构建清理

对于外部项目的构建，CMake 会有一些不同寻常的行为：

- ADDITIONAL_MAKE_CLEAN_FILES 仅在使用 Make 构建系统时有效。如果使用 Ninja 或 IDE 自带的构建系统，执行项目清理时，这些文件不会被删除。
- ExternalProject 会在 clean 运行后自动重新运行配置和构建命令。
- 可以采用以下两种方法来配置外部构建命令：
  1. 将外部 `BUILD_COMMAND` 命令设置为对所有源代码完整的重新编译。如果传递给 `externalproject_add` 命令的 `DEPENDS` 的依赖项发生了改变，或者当前执行的是项目清理操作（即运行了 `idf.py clean`、`ninja clean` 或者 `make clean`），那么就会执行该命令。
  2. 将外部 `BUILD_COMMAND` 命令设置为增量式构建命令，并给 `externalproject_add` 传递 `BUILD_ALWAYS 1` 参数。即不管实际的依赖情况，每次构建时，都会构建外部项目。这种方式仅当外部构建系统具备增量式构建的能力，且运行时间不会很长时才推荐。

构建外部项目的最佳方法取决于项目本身、其构建系统，以及是否需要频繁重新编译项目。

5.3.11 自定义 sdkconfig 的默认值

对于示例工程或者其他您不想指定完整 sdkconfig 配置的项目，但是您确实希望覆盖 ESP-IDF 默认值中的某些键值，则可以在项目中创建 `sdkconfig.defaults` 文件。重新创建新配置时将会用到此文件，另外在 `sdkconfig` 没有设置新配置值时，上述文件也会被用到。

如若需要覆盖此文件的名称，请设置 `SDKCONFIG_DEFAULTS` 环境变量。

依赖于硬件目标的 sdkconfig 默认值

除了 `sdkconfig.defaults` 之外，构建系统还将从 `sdkconfig.defaults.TARGET_NAME` 文件加载默认值，其中 `IDF_TARGET` 的值为 `TARGET_NAME`。例如，对于 `ESP32` 这个硬件目标，sdkconfig 的默认值会首先从 `sdkconfig.defaults` 获取，然后再从 `sdkconfig.defaults.esp32` 获取。

如果使用 `SDKCONFIG_DEFAULTS` 覆盖了 sdkconfig 默认文件的名称，则硬件目标的 sdkconfig 默认文件名也会从 `SDKCONFIG_DEFAULTS` 值中派生。

5.3.12 Flash 参数

有些情况下，我们希望在没有 IDF 时也能烧写目标板卡，为此，我们希望可以保存已构建的二进制文件、esptool.py 和 esptool write_flash 命令的参数。可以通过编写一段简单的脚本来保存二进制文件和 esptool.py。

运行项目构建之后，构建目录将包含项目二进制输出文件（`.bin` 文件），同时也包含以下烧录数据文件：

- `flash_project_args` 包含烧录整个项目的参数，包括应用程序 (app)、引导程序 (bootloader)、分区表，如果设置了 PHY 数据，也会包含此数据。
- `flash_app_args` 只包含烧录应用程序的参数。
- `flash_bootloader_args` 只包含烧录引导程序的参数。

您可以参照如下命令将任意烧录参数文件传递给 `esptool.py`:

```
python esptool.py --chip esp32 write_flash @build/flash_project_args
```

也可以手动复制参数文件中的数据到命令行中执行。

构建目录中还包含生成的 `flasher_args.json` 文件，此文件包含 JSON 格式的项目烧录信息，可用于 `idf.py` 和其它需要项目构建信息的工具。

5.3.13 构建 Bootloader

引导程序默认作为 `idf.py build` 的一部分被构建，也可以通过 `idf.py bootloader` 来单独构建。

引导程序是 /components/bootloader/subproject 内部独特的“子项目”，它有自己的项目 CMakeLists.txt 文件，能够构建独立于主项目的 `.ELF` 和 `.BIN` 文件，同时它又与主项目共享配置和构建目录。

子项目通过 /components/bootloader/project_include.cmake 文件作为外部项目插入到项目的顶层，主构建进程会运行子项目的 CMake，包括查找组件（主项目使用的组件的子集），生成引导程序专用的配置文件（从主 `sdkconfig` 文件中派生）。

5.3.14 选择硬件目标

当前 ESP-IDF 仅支持一个硬件目标，即 `esp32`，这也是构建系统默认的硬件目标。开发人员可以按照如下方法来添加对新硬件目标的支持:

```
rm sdkconfig
idf.py -DIDF_TARGET=new_target reconfigure
```

5.3.15 编写纯 CMake 组件

ESP-IDF 构建系统用“组件”的概念“封装”了 CMake，并提供了很多帮助函数来自动将这些组件集成到项目构建当中。

然而，“组件”概念的背后是一个完整的 CMake 构建系统，因此可以制作纯 CMake 组件。

下面是使用纯 CMake 语法为 `json` 组件编写的最小 CMakeLists 文件的示例:

```
add_library(json STATIC
cJSON/cJSON.c
cJSON/cJSON_Utils.c)

target_include_directories(json PUBLIC cJSON)
```

- 这实际上与 IDF 中的 json 组件 是等效的。
- 因为组件中的源文件不多，所以这个 CMakeLists 文件非常简单。对于具有大量源文件的组件而言，ESP-IDF 支持的组件通配符，可以简化组件 CMakeLists 的样式。
- 每当组件中新增一个与组件同名的库目标时，ESP-IDF 构建系统会自动将其添加到构建中，并公开公共的 include 目录。如果组件想要添加一个与组件不同名的库目标，就需要使用 CMake 命令手动添加依赖关系。

5.3.16 组件中使用第三方 CMake 项目

CMake 在许多开源的 C/C++ 项目中广泛使用，用户可以在自己的应用程序中使用开源代码。CMake 构建系统的一大好处就是可以导入这些第三方的项目，有时候甚至不用做任何改动。这就允许用户使用当前 ESP-IDF 组件尚未提供的功能，或者使用其它库来实现相同的功能。

假设 `main` 组件需要导入一个假想库 `foo`，相应的组件 CMakeLists 文件如下所示:

```
# 注册组件
register_component()

# 设置 `foo` 项目中的一些 CMake 变量，以控制 `foo` 的构建过程
set(FOO_BUILD_STATIC OFF)
set(FOO_BUILD_TESTS OFF)

# 创建并导入第三方库目标
add_subdirectory(foo)

# 将 IDF 全局的编译器设置、宏定义及其它选项传递给 `foo` 目标
target_include_directories(foo ${IDF_INCLUDE_DIRECTORIES})
target_compile_options(foo ${IDF_COMPILE_OPTIONS})
target_compile_definitions(foo ${IDF_COMPILE_DEFINITIONS})

# 将 `foo` 目标链接至 `main` 组件
target_link_libraries(main foo)
```

实际的案例请参考 build_system/cmake/import_lib。请注意，导入第三方库所需要做的工作可能会因库的不同而有所差异。建议仔细阅读第三方库的文档，了解如何将其导入到其它项目中。阅读第三方库的 CMakeLists.txt 文件以及构建结构也会有所帮助。

用这种方式还可以将第三方库封装成 ESP-IDF 的组件。例如 mbedtls 组件就是封装了 mbedtls 项目 得到的。详情请参考 mbedtls 组件的 CMakeLists.txt 文件 。

每当使用 ESP-IDF 构建系统时，CMake 变量 `ESP_PLATFORM` 都会被设置为 1。如果要在通用的 CMake 代码加入 IDF 特定的代码时，可以采用 `if (ESP_PLATFORM)` 的形式加以分隔。

5.3.17 在自定义 CMake 项目中使用 ESP-IDF

ESP-IDF 提供了一个模板 CMake 项目，可以基于此轻松创建应用程序。然而在有些情况下，用户可能已有一个现成的 CMake 项目，或者想自己创建一个 CMake 项目，此时就希望将 IDF 中的组件以库的形式链接到用户目标（库/可执行文件）。

使用 tools/cmake/idf_functions.cmake 中提供的 `idf_import_components` 和 `idf_link_components` 函数可以实现上述功能，例如:

```
cmake_minimum_required(VERSION 3.5)
project(my_custom_app C)

# 源文件 main.c 包含有 app_main() 函数的定义
add_executable(${CMAKE_PROJECT_NAME}.elf main.c)

# 提供 idf_import_components 及 idf_link_components 函数
include($ENV{IDF_PATH}/tools/cmake/idf_functions.cmake)

# 为 idf_import_components 做一些配置
# 使能创建构件（不是每个项目都必须）
set(IDF_BUILD_ARTIFACTS ON)
set(IDF_PROJECT_EXECUTABLE ${CMAKE_PROJECT_NAME}.elf)
set(IDF_BUILD_ARTIFACTS_DIR ${CMAKE_BINARY_DIR})

# idf_import_components 封装了 add_subdirectory()，为组件创建库目标，然后使用给定的变量接收“返回”的库目标。
# 在本例中，返回的库目标被保存在“component”变量中。
idf_import_components(components $ENV{IDF_PATH} esp-idf)

# idf_link_components 封装了 target_link_libraries()，将被 idf_import_components 处理过的组件链接到目标
idf_link_components(${CMAKE_PROJECT_NAME}.elf "${components}")
```

上述代码片段导入了 ESP-IDF 目录下的所有组件，并使用了 KConfig 中的默认值，同时还允许创建其它一

些构件（比如分区表、包含项目信息的 json 文件、引导程序等）。除此以外，用户还可以设置其它的构建参数，其完整列表如下：

- IDF_BUILD_ARTIFACTS：构建工件，例如引导加载程序、分区表二进制文件、分区二进制数据、将二进制文件烧录到目标芯片时所需的包含项目信息的 json 文件等。同时需要设置 IDF_PROJECT_EXECUTABLE 和 IDF_BUILD_ARTIFACTS_DIR 变量。
- IDF_PROJECT_EXECUTABLE：最终可执行文件的名称。某些工件在创建的时候需要此参数。
- IDF_BUILD_ARTIFACTS_DIR：创建的构件被存放的位置。
- IDF_EXTRA_COMPONENTS_DIR：在 默认组件目录 之外的组件搜索路径。
- IDF_COMPONENTS：要导入的组件列表，设置此变量可以精简导入的组件，仅导入需要的组件，加快构建的速度。如果没有设置该变量，将会导入默认组件目录以及 IDF_EXTRA_COMPONENTS_DIR（如果设置了该变量）中找到的所有组件。请注意，该列表中组件的依赖组件（除了 IDF_COMPONENT_REQUIRES_COMMON 之外）也会被加入到构建之中。
- IDF_COMPONENT_REQUIRES_COMMON：通用组件依赖列表。无论 IDF_COMPONENTS 的值是什么，此列表中的组件及其依赖组件都会被导入到构建中。默认情况下，此变量被设置为核心“系统”组件的最小集合。
- IDF_SDKCONFIG_DEFAULTS：配置文件的覆盖路径，如果未设置，组件将会使用默认的配置选项来构建。
- IDF_BUILD_TESTS：在构建中包含组件的测试。默认情况下，所有的组件测试都会被包含。组件测试可通过 IDF_TEST_COMPONENTS 和 IDF_TEST_EXCLUDE_COMPONENTS 进行过滤。
- IDF_TEST_COMPONENTS：如果设置了 IDF_BUILD_TESTS，构建中只会包含此列表中的组件测试。如果没有设置 IDF_BUILD_TESTS，请忽略此项。
- IDF_TEST_EXCLUDE_COMPONENTS：如果设置了 IDF_BUILD_TESTS，此列表中的组件测试将不会包含在构建中。如果没有设置 IDF_BUILD_TESTS，请忽略此项。该变量的优先级高于 IDF_TEST_COMPONENTS，这意味着，即使 IDF_TEST_COMPONENTS 中也存在此列表中的组件测试，它也不会被包含到构建之中。

build_system/cmake/idf_as_lib 中的示例演示了如何在自定义的 CMake 项目创建一个类似于 Hello World 的应用程序。

5.3.18 文件通配符 & 增量构建

在 ESP-IDF 组件中添加源文件的首选方法是在 COMPONENT_SRCS 中手动列出它们：

```
set(COMPONENT_SRCS library/a.c library/b.c platform/platform.c)
```

这是在 CMake 中手动列出源文件的 最佳实践。然而，当有许多源文件都需要添加到构建中时，这种方法就会很不方便。ESP-IDF 构建系统因此提供了另一种替代方法，即使用 COMPONENT_SRCDIRS 来指定源文件：

```
set(COMPONENT_SRCDIRS library platform)
```

后台会使用通配符在指定的目录中查找源文件。但是请注意，在使用这种方法的时候，如果组件中添加了一个新的源文件，CMake 并不知道重新运行配置，最终该文件也没有被加入构建中。

如果是自己添加的源文件，这种折衷还是可以接受的，因为用户可以触发一次干净的构建，或者运行 `idf.py reconfigure` 来手动重启 CMake。但是，如果你需要与其他使用 Git 等版本控制工具的开发人员共享项目时，问题就会变得更加困难，因为开发人员有可能会拉取新的版本。

ESP-IDF 中的组件使用了第三方的 Git CMake 集成模块(/tools/cmake/third_party/GetGitRevisionDescription.cmake)，任何时候源码仓库的提交记录发生了改变，该模块就会自动重新运行 CMake。即只要拉取了新的 ESP-IDF 版本，CMake 就会重新运行。

对于不属于 ESP-IDF 的项目组件，有以下几个选项供参考：

- 如果项目文件保存在 Git 中，ESP-IDF 会自动跟踪 Git 修订版本，并在它发生变化时重新运行 CMake。
- 如果一些组件保存在第三方 Git 仓库中（不在项目仓库或 ESP-IDF 仓库），则可以在组件 CMakeLists 文件中调用 `git_describe` 函数，以便在 Git 修订版本发生变化时自动重启 CMake。
- 如果没有使用 Git，请记住在源文件发生变化时手动运行 `idf.py reconfigure`。
- 使用 `COMPONENT_SRCS` 在项目组件中列出所有源文件，可以完全避免这一问题。

具体选择哪一方式，就要取决于项目本身，以及项目用户。

5.3.19 构建系统的元数据

为了将 ESP-IDF 集成到 IDE 或者其它构建系统中，CMake 在构建的过程中会在 `build/` 目录下生成大量元数据文件。运行 `cmake` 或 `idf.py reconfigure` （或任何其它 `idf.py` 构建命令），可以重新生成这些元数据文件。

- `compile_commands.json` 是标准格式的 JSON 文件，它描述了在项目中参与编译的每个源文件。CMake 其中的一个功能就是生成此文件，许多 IDE 都知道如何解析此文件。
- `project_description.json` 包含有关 ESP-IDF 项目、已配置路径等的一些常规信息。
- `flasher_args.json` 包含 esptool.py 工具用于烧录项目二进制文件的参数，此外还有 `flash_*_args` 文件，可直接与 esptool.py 一起使用。更多详细信息请参阅*Flash 参数*。
- `CMakeCache.txt` 是 CMake 的缓存文件，包含 CMake 进程、工具链等其它信息。
- `config/sdkconfig.json` 包含 JSON 格式的项目配置结果。
- `config/kconfig_menus.json` 是在 menuconfig 中显示菜单的 JSON 格式版本，用于外部 IDE 的 UI。

JSON 配置服务器

`confserver.py` 工具可以帮助 IDE 轻松地与配置系统的逻辑进行集成，它运行在后台，通过使用 stdin 和 stdout 读写 JSON 文件的方式与调用进程交互。

您可以通过 `idf.py confserver` 或 `ninja confserver` 从项目中运行 `confserver.py`，也可以使用不同的构建生成器来触发类似的目标。

配置服务器会向 stderr 输出方便阅读的错误和警告信息，向 stdout 输出 JSON 文件。启动时，配置服务器将以 JSON 字典的形式输出系统中每个配置项的完整值，以及范围受限的值的可用范围。sdkconfig.json 中包含有相同的信息:

```
{"version": 1, "values": { "ITEM": "value", "ITEM_2": 1024, "ITEM_3": false }, "ranges"␣
↪: { "ITEM_2" : [ 0, 32768 ] } }
```

配置服务器仅发送可见的配置项，其它不可见的或者被禁用的配置项可从 kconfig_menus.json 静态文件中解析得到，此文件还包含菜单结构和其它元数据（描述、类型、范围等）。

然后配置服务器将等待客户端的输入，客户端会发起请求，要求更改一个或多个配置项的值，内容的格式是个 JSON 对象，后面跟一个换行符:

```
{"version": "1", "set": {"SOME_NAME": false, "OTHER_NAME": true } }
```

配置服务器将解析此请求，更新 sdkconfig 文件，并返回完整的变更列表:

```
{"version": 1, "values": {"SOME_NAME": false, "OTHER_NAME": true , "DEPENDS_ON_SOME_NAME
↪": null}}
```

当前不可见或者禁用的配置项会返回 null，任何新的可见配置项则会返回其当前新的可见值。

如果配置项的取值范围因另一个值的变化发生了改变，那么配置服务器会发送:

```
{"version": 1, "values": {"OTHER_NAME": true }, "ranges" : { "HAS_RANGE" : [ 3, 4 ] } }
```

如果传递的数据无效，那么 JSON 对象中会有 error 字段:

```
{"version": 1, "values": {}, "error": ["The following config symbol(s) were not visible␣
↪so were not updated: NOT_VISIBLE_ITEM"]}
```

默认情况下，变更后的配置不会被写进 sdkconfig 文件。更改的内容在发出 “save” 命令之前会先储存在内存中:

```
{"version": 1, "save": null }
```

若要从已保存的文件中重新加载配置值，并丢弃内存中的任何更改，可以发送 “load” 命令:

```
{"version": 1, "load": null }
```

“load” 和 “save” 的值可以是新的路径名，也可以设置为 “null” 用以加载/保存之前使用的路径名。

配置服务器对 “load” 命令的响应始终是完整的配置值和取值范围的集合，这与服务器初始启动阶段的响应相同。

“load”、“set” 和 “save” 的任意组合可以在一条单独的命令中发送出去，服务器按照组合中的顺序执行命令。因此，可以使用一条命令实现从文件中加载配置，更新配置值，然后将其保存到文件中。

注解： 配置服务器不会自动加载外部对 sdkconfig 文件的任何更改。如果文件被外部编辑，则需要发送 “load” 命令或重启服务器。

注解： sdkconfig 文件更新后，配置服务器不会重新运行 CMake 来生成其它的构建文件和元数据文件。这些文件会在下一次运行 CMake 或 idf.py 时自动生成。

5.3.20 从 ESP-IDF GNU Make 构建系统迁移到 CMake 构建系统

ESP-IDF CMake 构建系统与旧版的 GNU Make 构建系统在某些方面非常相似，例如将 component.mk 文件改写 CMakeLists.txt，像 COMPONENT_ADD_INCLUDEDIRS 和 COMPONENT_SRCDIRS 等变量可以保持不变，只需将语法改为 CMake 语法即可。

自动转换工具

/tools/cmake/convert_to_cmake.py 中提供了一个项目自动转换工具。运行此命令时需要加上项目路径，如下所示:

```
$IDF_PATH/tools/cmake/convert_to_cmake.py /path/to/project_dir
```

项目目录必须包含 Makefile 文件，并确保主机已安装 GNU Make (make) 工具，并且被添加到了 PATH 环境变量中。

该工具会将项目 Makefile 文件和所有组件的 component.mk 文件转换为对应的 CMakeLists.txt 文件。

转换过程如下：该工具首先运行 make 来展开 ESP-IDF 构建系统设置的变量，然后创建相应的 CMakelists 文件来设置相同的变量。

转换工具并不能处理复杂的 Makefile 逻辑或异常的目标，这些需要手动转换。

CMake 中不可用的功能

有些功能已从 CMake 构建系统中移除，或者已经发生很大改变。GNU Make 构建系统中的以下变量已从 CMake 构建系统中删除：

- COMPONENT_BUILD_DIR：由 CMAKE_CURRENT_BINARY_DIR 替代。
- COMPONENT_LIBRARY：默认为 $(COMPONENT_NAME).a 但是库名可以被组件覆盖。在 CMake 构建系统中，组件库名称不可再被组件覆盖。
- CC、LD、AR、OBJCOPY：gcc xtensa 交叉工具链中每个工具的完整路径。CMake 使用 CMAKE_C_COMPILER、CMAKE_C_LINK_EXECUTABLE 和 CMAKE_OBJCOPY 进行替代。完整列表请参阅 CMake 语言变量。

- HOSTCC、HOSTLD、HOSTAR：宿主机本地工具链中每个工具的全名。CMake 系统不再提供此变量，外部项目需要手动检测所需的宿主机工具链。
- COMPONENT_ADD_LDFLAGS：用于覆盖链接标志。CMake 中使用 target_link_libraries 命令替代。
- COMPONENT_ADD_LINKER_DEPS：链接过程依赖的文件列表。target_link_libraries 通常会自动推断这些依赖。对于链接脚本，可以使用自定义的 CMake 函数 target_linker_scripts。
- COMPONENT_SUBMODULES：不再使用。CMake 会自动枚举 ESP-IDF 仓库中所有的子模块。
- COMPONENT_EXTRA_INCLUDES：曾是 COMPONENT_PRIV_INCLUDEDIRS 变量的替代版本，仅支持绝对路径。CMake 系统中统一使用 COMPONENT_PRIV_INCLUDEDIRS （可以是相对路径，也可以是绝对路径）。
- COMPONENT_OBJS：以前，可以以目标文件列表的方式指定组件源，现在，可以通过 COMPONENT_SRCS 以源文件列表的形式指定组件源。
- COMPONENT_OBJEXCLUDE：已被 COMPONENT_SRCEXCLUDE 替换。用于指定源文件（绝对路径或组件目录的相对路径）。
- COMPONENT_EXTRA_CLEAN：已被 ADDITIONAL_MAKE_CLEAN_FILES 属性取代，注意，*CMake 对此项功能有部分限制*。
- COMPONENT_OWNBUILDTARGET & COMPONENT_OWNCLEANTARGET：已被 CMake 外部项目 替代，详细内容请参阅*完全覆盖组件的构建过程*。
- COMPONENT_CONFIG_ONLY：已被 register_config_only_component() 函数替代，请参阅*仅配置组件*。
- CFLAGS、CPPFLAGS、CXXFLAGS：已被相应的 CMake 命令替代，请参阅*组件编译控制*。

无默认值的变量

以下变量不再具有默认值：

- COMPONENT_SRCDIRS
- COMPONENT_ADD_INCLUDEDIRS

不再需要的变量

如果设置了 COMPONENT_SRCS，就不需要再设置 COMPONENT_SRCDIRS。实际上，CMake 构建系统中如果设置了 COMPONENT_SRCDIRS，那么 COMPONENT_SRCS 就会被忽略。

从 Make 中烧录

仍然可以使用 make flash 或者类似的目标来构建和烧录，但是项目 sdkconfig 不能再用来指定串口和波特率。可以使用环境变量来覆盖串口和波特率的设置，详情请参阅*使用 Ninja/Make 来烧录*。

5.4 错误处理

[English]

5.4.1 概述

在应用程序开发中，及时发现并处理在运行时期的错误，对于保证应用程序的健壮性非常重要。常见的运行时错误有如下几种：

- 可恢复的错误：
  - 通过函数的返回值（错误码）表示的错误
  - 使用 `throw` 关键字抛出的 C++ 异常
- 不可恢复（严重）的错误：
  - 断言失败（使用 `assert` 宏或者其它类似方法）或者直接调用 `abort()` 函数造成的错误
  - CPU 异常：访问受保护的内存区域、非法指令等
  - 系统级检查：看门狗超时、缓存访问错误、堆栈溢出、堆栈粉碎、堆栈损坏等

本文将介绍 ESP-IDF 中针对可恢复错误的错误处理机制，并提供一些常见错误的处理模式。

关于如何处理不可恢复的错误，请查阅不可恢复错误。

5.4.2 错误码

ESP-IDF 中大多数函数会返回*esp_err_t* 类型的错误码，*esp_err_t* 实质上是带符号的整型，`ESP_OK` 代表成功（没有错误），具体值定义为 0。

在 ESP-IDF 中，许多头文件都会使用预处理器，定义可能出现的错误代码。这些错误代码通常均以 `ESP_ERR_` 前缀开头，一些常见错误（比如内存不足、超时、无效参数等）的错误代码则已经在 `esp_err.h` 文件中定义好了。此外，ESP-IDF 中的各种组件 (component) 也都可以针对具体情况，自行定义更多错误代码。

完整错误代码列表，请见错误代码参考 中查看完整的错误列表。

5.4.3 错误码到错误消息

错误代码并不直观，因此 ESP-IDF 还可以使用*esp_err_to_name()* 或者*esp_err_to_name_r()* 函数，将错误代码转换为具体的错误消息。例如，我们可以向*esp_err_to_name()* 函数传递错误代码 `0x101`，可以得到返回字符串 “ESP_ERR_NO_MEM”。这样一来，我们可以在日志中输出更加直观的错误消息，而不是简单的错误码，从而帮助研发人员更快理解发生了何种错误。

此外，如果出现找不到匹配的 `ESP_ERR_` 值的情况，函数*esp_err_to_name_r()* 则会尝试将错误码作为一种标准 POSIX 错误代码 进行解释。具体过程为：POSIX 错误代码（例如 `ENOENT`，`ENOMEM`）定义在 `errno.h` 文件中，可以通过 `errno` 变量获得，进而调用 `strerror_r` 函数实现。在 ESP-IDF 中，`errno` 是一个基于

线程的局部变量，即每个 FreeRTOS 任务都有自己的 errno 副本，通过函数修改 errno 也只会作用于当前任务中的 errno 变量值。

该功能（即在无法匹配 ESP_ERR_ 值时，尝试用标准 POSIX 解释错误码）默认启用。用户也可以禁用该功能，从而减小应用程序的二进制文件大小，详情可见*CONFIG_ESP_ERR_TO_NAME_LOOKUP*。注意，该功能对禁用并不影响*esp_err_to_name()* 和*esp_err_to_name_r()* 函数的定义，用户仍可调用这两个函数转化错误码。在这种情况下，*esp_err_to_name()* 函数在遇到无法匹配错误码的情况会返回 UNKNOWN ERROR，而*esp_err_to_name_r()* 函数会返回 Unknown error 0xXXXX(YYYYY)，其中 0xXXXX 和 YYYYY 分别代表错误代码的十六进制和十进制表示。

5.4.4 ESP_ERROR_CHECK 宏

宏 ESP_ERROR_CHECK() 的功能和 assert 类似，不同之处在于：这个宏会检查*esp_err_t* 的值，而非判断 bool 条件。如果传给 ESP_ERROR_CHECK() 的参数不等于*ESP_OK* ，则会在控制台上打印错误消息，然后调用 abort() 函数。

错误消息通常如下所示：

```
ESP_ERROR_CHECK failed: esp_err_t 0x107 (ESP_ERR_TIMEOUT) at 0x400d1fdf

file: "/Users/user/esp/example/main/main.c" line 20
func: app_main
expression: sdmmc_card_init(host, &card)

Backtrace: 0x40086e7c:0x3ffb4ff0 0x40087328:0x3ffb5010 0x400d1fdf:0x3ffb5030␣
↪0x400d0816:0x3ffb5050
```

- 第一行打印错误代码的十六进制表示，及该错误在源代码中的标识符。这个标识符取决于*CONFIG_ESP_ERR_TO_NAME_LOOKUP* 选项的设定。最后，第一行还会打印程序中该错误发生的具体位置。
- 下面几行显示了程序中调用 ESP_ERROR_CHECK() 宏的具体位置，以及传递给该宏的参数。
- 最后一行打印回溯结果。对于所有不可恢复错误，这里在应急处理程序中打印的内容都是一样的。更多有关回溯结果的详细信息，请参阅不可恢复错误 。

注解： 如果使用*IDF monitor*, 则最后一行回溯结果中的地址将会被替换为相应的文件名和行号。

5.4.5 错误处理模式

1. 尝试恢复。根据具体情况不同，我们具体可以：
   - 在一段时间后，重新调用该函数；

- 尝试删除该驱动，然后重新进行“初始化”；
- 采用其他带外机制，修改导致错误发生的条件（例如，对一直没有响应的外设进行复位等）。

示例：

```
esp_err_t err;
do {
    err = sdio_slave_send_queue(addr, len, arg, timeout);
    // 如果发送队列已满就不断重试
} while (err == ESP_ERR_TIMEOUT);
if (err != ESP_OK) {
    // 处理其他错误
}
```

2. 将错误传递回调用程序。在某些中间件组件中，采用此类处理模式代表函数必须以相同的错误码退出，这样才能确保所有分配的资源都能得到释放。

   示例：

```
sdmmc_card_t* card = calloc(1, sizeof(sdmmc_card_t));
if (card == NULL) {
    return ESP_ERR_NO_MEM;
}
esp_err_t err = sdmmc_card_init(host, &card);
if (err != ESP_OK) {
    // 释放内存
    free(card);
    // 将错误码传递给上层（例如通知用户）
    // 或者，应用程序可以自定义错误代码并返回
    return err;
}
```

3. 转为不可恢复错误，比如使用 ESP_ERROR_CHECK。详情请见*ESP_ERROR_CHECK 宏* 章节。

   对于中间件组件而言，通常并不希望在发生错误时中止应用程序。不过，有时在应用程序级别，这种做法是可以接受的。在 ESP-IDF 的示例代码中，很多都会使用 ESP_ERROR_CHECK 来处理各种 API 引发的错误，虽然这不是应用程序的最佳做法，但可以让示例代码看起来更加简洁。

   示例：

```
ESP_ERROR_CHECK(spi_bus_initialize(host, bus_config, dma_chan));
```

5.4.6 C++ 异常

默认情况下，ESP-IDF 会禁用对 C++ 异常的支持，但是可以通过*CONFIG_CXX_EXCEPTIONS* 选项启用。

通常情况下，启用异常处理会让应用程序的二进制文件增加几 kB。此外，启用该功能时还应为异常事故池预留一定内存。当应用程序无法从堆中分配异常对象时，就可以使用这个池中的内存。该内存池的大小可以通过*CONFIG_CXX_EXCEPTIONS_EMG_POOL_SIZE* 来设定。

如果 C++ 程序抛出了异常，但是程序中并没有 `catch` 代码块来捕获该异常，那么程序的运行就会被 `abort` 函数中止，然后打印回溯信息。有关回溯的更多信息，请参阅不可恢复错误 。

5.5 Fatal Errors

5.5.1 Overview

In certain situations, execution of the program can not be continued in a well defined way. In ESP-IDF, these situations include:

- CPU Exceptions: Illegal Instruction, Load/Store Alignment Error, Load/Store Prohibited error, Double Exception.
- System level checks and safeguards:
  - *Interrupt watchdog* timeout
  - *Task watchdog* timeout (only fatal if *CONFIG_TASK_WDT_PANIC* is set)
  - Cache access error
  - Brownout detection event
  - Stack overflow
  - Stack smashing protection check
  - Heap integrity check
- Failed assertions, via `assert`, `configASSERT` and similar macros.

This guide explains the procedure used in ESP-IDF for handling these errors, and provides suggestions on troubleshooting the errors.

5.5.2 Panic Handler

Every error cause listed in the *Overview* will be handled by *panic handler*.

Panic handler will start by printing the cause of the error to the console. For CPU exceptions, the message will be similar to:

```
Guru Meditation Error: Core 0 panic'ed (IllegalInstruction). Exception was unhandled.
```

For some of the system level checks (interrupt watchdog, cache access error), the message will be similar to:

```
Guru Meditation Error: Core 0 panic'ed (Cache disabled but cached memory region accessed)
```

In all cases, error cause will be printed in parens. See *Guru Meditation Errors* for a list of possible error causes.

Subsequent behavior of the panic handler can be set using *CONFIG_ESP32_PANIC* configuration choice. The available options are:

- Print registers and reboot (`CONFIG_ESP32_PANIC_PRINT_REBOOT`) —default option.

  This will print register values at the point of the exception, print the backtrace, and restart the chip.

- Print registers and halt (`CONFIG_ESP32_PANIC_PRINT_HALT`)

  Similar to the above option, but halt instead of rebooting. External reset is required to restart the program.

- Silent reboot (`CONFIG_ESP32_PANIC_SILENT_REBOOT`)

  Don't print registers or backtrace, restart the chip immediately.

- Invoke GDB Stub (`CONFIG_ESP32_PANIC_GDBSTUB`)

  Start GDB server which can communicate with GDB over console UART port. See *GDB Stub* for more details.

Behavior of panic handler is affected by two other configuration options.

- If *CONFIG_ESP32_DEBUG_OCDAWARE* is enabled (which is the default), panic handler will detect whether a JTAG debugger is connected. If it is, execution will be halted and control will be passed to the debugger. In this case registers and backtrace are not dumped to the console, and GDBStub / Core Dump functions are not used.
- If *Core Dump* feature is enabled (`CONFIG_ESP32_ENABLE_COREDUMP_TO_FLASH` or `CONFIG_ESP32_ENABLE_COREDUMP_TO_UART` options), then system state (task stacks and registers) will be dumped either to Flash or UART, for later analysis.

The following diagram illustrates panic handler behavior:

5.5.3 Register Dump and Backtrace

Unless `CONFIG_ESP32_PANIC_SILENT_REBOOT` option is enabled, panic handler prints some of the CPU registers, and the backtrace, to the console:

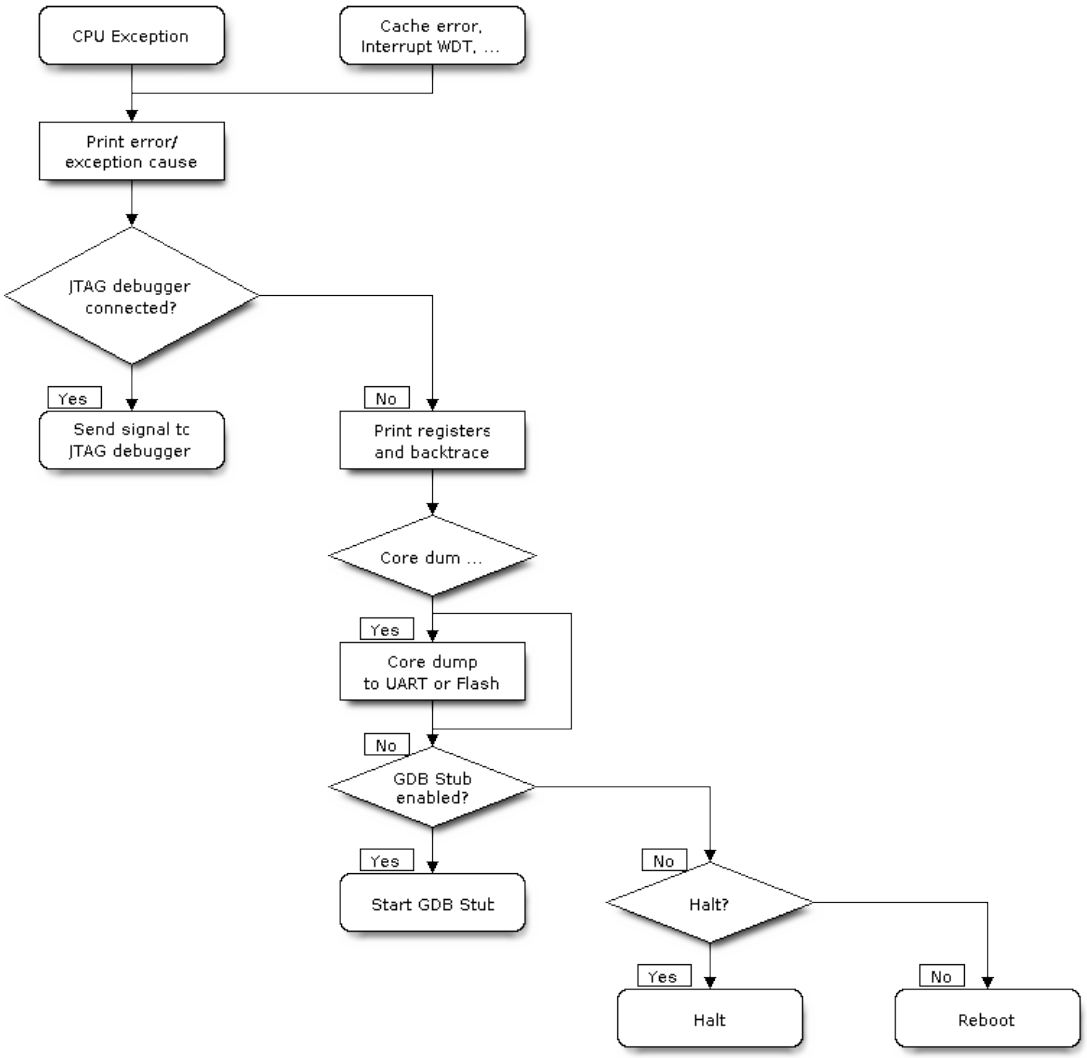

图 1: Panic Handler Flowchart

```
Core 0 register dump:
PC      : 0x400e14ed  PS      : 0x00060030  A0      : 0x800d0805  A1      : 0x3ffb5030
A2      : 0x00000000  A3      : 0x00000001  A4      : 0x00000001  A5      : 0x3ffb50dc
A6      : 0x00000000  A7      : 0x00000001  A8      : 0x00000000  A9      : 0x3ffb5000
A10     : 0x00000000  A11     : 0x3ffb2bac  A12     : 0x40082d1c  A13     : 0x06ff1ff8
A14     : 0x3ffb7078  A15     : 0x00000000  SAR     : 0x00000014  EXCCAUSE: 0x0000001d
EXCVADDR: 0x00000000  LBEG    : 0x4000c46c  LEND    : 0x4000c477  LCOUNT  : 0xffffffff

Backtrace: 0x400e14ed:0x3ffb5030 0x400d0802:0x3ffb5050
```

Register values printed are the register values in the exception frame, i.e. values at the moment when CPU exception or other fatal error has occured.

Register dump is not printed if the panic handler was executed as a result of an `abort()` call.

In some cases, such as interrupt watchdog timeout, panic handler may print additional CPU registers (EPC1-EPC4) and the registers/backtrace of the code running on the other CPU.

Backtrace line contains PC:SP pairs, where PC is the Program Counter and SP is Stack Pointer, for each stack frame of the current task. If a fatal error happens inside an ISR, the backtrace may include PC:SP pairs both from the task which was interrupted, and from the ISR.

If *IDF Monitor* is used, Program Counter values will be converted to code locations (function name, file name, and line number), and the output will be annotated with additional lines:

```
Core 0 register dump:
PC      : 0x400e14ed  PS      : 0x00060030  A0      : 0x800d0805  A1      : 0x3ffb5030
0x400e14ed: app_main at /Users/user/esp/example/main/main.cpp:36

A2      : 0x00000000  A3      : 0x00000001  A4      : 0x00000001  A5      : 0x3ffb50dc
A6      : 0x00000000  A7      : 0x00000001  A8      : 0x00000000  A9      : 0x3ffb5000
A10     : 0x00000000  A11     : 0x3ffb2bac  A12     : 0x40082d1c  A13     : 0x06ff1ff8
0x40082d1c: _calloc_r at /Users/user/esp/esp-idf/components/newlib/syscalls.c:51

A14     : 0x3ffb7078  A15     : 0x00000000  SAR     : 0x00000014  EXCCAUSE: 0x0000001d
EXCVADDR: 0x00000000  LBEG    : 0x4000c46c  LEND    : 0x4000c477  LCOUNT  : 0xffffffff

Backtrace: 0x400e14ed:0x3ffb5030 0x400d0802:0x3ffb5050
0x400e14ed: app_main at /Users/user/esp/example/main/main.cpp:36

0x400d0802: main_task at /Users/user/esp/esp-idf/components/esp32/cpu_start.c:470
```

To find the location where a fatal error has happened, look at the lines which follow the "Backtrace" line. Fatal error location is the top line, and subsequent lines show the call stack.

5.5.4 GDB Stub

If `CONFIG_ESP32_PANIC_GDBSTUB` option is enabled, panic handler will not reset the chip when fatal error happens. Instead, it will start GDB remote protocol server, commonly referred to as GDB Stub. When this happens, GDB instance running on the host computer can be instructed to connect to the ESP32 UART port.

If *IDF Monitor* is used, GDB is started automatically when GDB Stub prompt is detected on the UART. The output would look like this:

```
Entering gdb stub now.
$T0b#e6GNU gdb (crosstool-NG crosstool-ng-1.22.0-80-gff1f415) 7.10
Copyright (C) 2015 Free Software Foundation, Inc.
License GPLv3+: GNU GPL version 3 or later <http://gnu.org/licenses/gpl.html>
This is free software: you are free to change and redistribute it.
There is NO WARRANTY, to the extent permitted by law.  Type "show copying"
and "show warranty" for details.
This GDB was configured as "--host=x86_64-build_apple-darwin16.3.0 --target=xtensa-esp32-
↪elf".
Type "show configuration" for configuration details.
For bug reporting instructions, please see:
<http://www.gnu.org/software/gdb/bugs/>.
Find the GDB manual and other documentation resources online at:
<http://www.gnu.org/software/gdb/documentation/>.
For help, type "help".
Type "apropos word" to search for commands related to "word"...
Reading symbols from /Users/user/esp/example/build/example.elf...done.
Remote debugging using /dev/cu.usbserial-31301
0x400e1b41 in app_main ()
    at /Users/user/esp/example/main/main.cpp:36
36      *((int*) 0) = 0;
(gdb)
```

GDB prompt can be used to inspect CPU registers, local and static variables, and arbitrary locations in memory. It is not possible to set breakpoints, change PC, or continue execution. To reset the program, exit GDB and perform external reset: Ctrl-T Ctrl-R in IDF Monitor, or using external reset button on the development board.

5.5.5 Guru Meditation Errors

This section explains the meaning of different error causes, printed in parens after `Guru Meditation Error: Core panic'ed` message.

注解: See Wikipedia article for historical origins of "Guru Meditation".

IllegalInstruction

This CPU exception indicates that the instruction which was executed was not a valid instruction. Most common reasons for this error include:

- FreeRTOS task function has returned. In FreeRTOS, if task function needs to terminate, it should call *vTaskDelete()* function and delete itself, instead of returning.
- Failure to load next instruction from SPI flash. This usually happens if:
  - Application has reconfigured SPI flash pins as some other function (GPIO, UART, etc.). Consult Hardware Design Guidelines and the Datasheet for the chip or module for details about SPI flash pins.
  - Some external device was accidentally connected to SPI flash pins, and has interfered with communication between ESP32 and SPI flash.

InstrFetchProhibited

This CPU exception indicates that CPU could not load an instruction because the the address of the instruction did not belong to a valid region in instruction RAM or ROM.

Usually this means an attempt to call a function pointer, which does not point to valid code. `PC` (Program Counter) register can be used as an indicator: it will be zero or will contain garbage value (not `0x4xxxxxxx`).

LoadProhibited, StoreProhibited

This CPU exception happens when application attempts to read from or write to an invalid memory location. The address which was written/read is found in `EXCVADDR` register in the register dump. If this address is zero, it usually means that application attempted to dereference a NULL pointer. If this address is close to zero, it usually means that application attempted to access member of a structure, but the pointer to the structure was NULL. If this address is something else (garbage value, not in `0x3fxxxxxx` - `0x6xxxxxxx` range), it likely means that the pointer used to access the data was either not initialized or was corrupted.

IntegerDivideByZero

Application has attempted to do integer division by zero.

LoadStoreAlignment

Application has attempted to read or write memory location, and address alignment did not match load/store size. For example, 32-bit load can only be done from 4-byte aligned address, and 16-bit load can only be done from a 2-byte aligned address.

LoadStoreError

Application has attempted to do a 8- or 16- bit load/store from a memory region which only supports 32-bit loads/stores. For example, dereferencing a `char*` pointer which points into intruction memory will result in such an error.

Unhandled debug exception

This will usually be followed by a message like:

```
Debug exception reason: Stack canary watchpoint triggered (task_name)
```

This error indicates that application has written past the end of the stack of `task_name` task. Note that not every stack overflow is guaranteed to trigger this error. It is possible that the task writes to stack beyond the stack canary location, in which case the watchpoint will not be triggered.

Interrupt wdt timeout on CPU0 / CPU1

Indicates that interrupt watchdog timeout has occured. See *Watchdogs* for more information.

Cache disabled but cached memory region accessed

In some situations ESP-IDF will temporarily disable access to external SPI Flash and SPI RAM via caches. For example, this happens with spi_flash APIs are used to read/write/erase/mmap regions of SPI Flash. In these situations, tasks are suspended, and interrupt handlers not registered with `ESP_INTR_FLAG_IRAM` are disabled. Make sure that any interrupt handlers registered with this flag have all the code and data in IRAM/DRAM. Refer to the *SPI flash API documentation* for more details.

5.5.6 Other Fatal Errors

Brownout

ESP32 has a built-in brownout detector, which is enabled by default. Brownout detector can trigger system reset if supply voltage goes below safe level. Brownout detector can be configured using *CONFIG_BROWNOUT_DET* and *CONFIG_BROWNOUT_DET_LVL_SEL* options. When brownout detector triggers, the following message is printed:

```
Brownout detector was triggered
```

Chip is reset after the message is printed.

Note that if supply voltage is dropping at a fast rate, only part of the message may be seen on the console.

Corrupt Heap

ESP-IDF heap implementation contains a number of run-time checks of heap structure. Additional checks ("Heap Poisoning") can be enabled in menuconfig. If one of the checks fails, message similar to the following will be printed:

```
CORRUPT HEAP: Bad tail at 0x3ffe270a. Expected 0xbaad5678 got 0xbaac5678
assertion "head != NULL" failed: file "/Users/user/esp/esp-idf/components/heap/multi_
↪heap_poisoning.c", line 201, function: multi_heap_free
abort() was called at PC 0x400dca43 on core 0
```

Consult *Heap Memory Debugging* documentation for further information.

Stack Smashing

Stack smashing protection (based on GCC `-fstack-protector*` flags) can be enabled in ESP-IDF using *CONFIG_STACK_CHECK_MODE* option. If stack smashing is detected, message similar to the following will be printed:

```
Stack smashing protect failure!

abort() was called at PC 0x400d2138 on core 0

Backtrace: 0x4008e6c0:0x3ffc1780 0x4008e8b7:0x3ffc17a0 0x400d2138:0x3ffc17c0␣
↪0x400e79d5:0x3ffc17e0 0x400e79a7:0x3ffc1840 0x400e79df:0x3ffc18a0␣
↪0x400e2235:0x3ffc18c0 0x400e1916:0x3ffc18f0 0x400e19cd:0x3ffc1910␣
↪0x400e1a11:0x3ffc1930 0x400e1bb2:0x3ffc1950 0x400d2c44:0x3ffc1a80
0
```

The backtrace should point to the function where stack smashing has occured. Check the function code for unbounded access to local arrays.

5.6 Deep Sleep Wake Stubs

ESP32 supports running a "deep sleep wake stub" when coming out of deep sleep. This function runs immediately as soon as the chip wakes up - before any normal initialisation, bootloader, or ESP-IDF code

has run. After the wake stub runs, the SoC can go back to sleep or continue to start ESP-IDF normally.

Deep sleep wake stub code is loaded into "RTC Fast Memory" and any data which it uses must also be loaded into RTC memory. RTC memory regions hold their contents during deep sleep.

5.6.1 Rules for Wake Stubs

Wake stub code must be carefully written:

- As the SoC has freshly woken from sleep, most of the peripherals are in reset states. The SPI flash is unmapped.
- The wake stub code can only call functions implemented in ROM or loaded into RTC Fast Memory (see below.)
- The wake stub code can only access data loaded in RTC memory. All other RAM will be unintiailised and have random contents. The wake stub can use other RAM for temporary storage, but the contents will be overwritten when the SoC goes back to sleep or starts ESP-IDF.
- RTC memory must include any read-only data (.rodata) used by the stub.
- Data in RTC memory is initialised whenever the SoC restarts, except when waking from deep sleep. When waking from deep sleep, the values which were present before going to sleep are kept.
- Wake stub code is a part of the main esp-idf app. During normal running of esp-idf, functions can call the wake stub functions or access RTC memory. It is as if these were regular parts of the app.

5.6.2 Implementing A Stub

The wake stub in esp-idf is called `esp_wake_deep_sleep()`. This function runs whenever the SoC wakes from deep sleep. There is a default version of this function provided in esp-idf, but the default function is weak-linked so if your app contains a function named `esp_wake_deep_sleep()` then this will override the default.

If supplying a custom wake stub, the first thing it does should be to call `esp_default_wake_deep_sleep()`.

It is not necessary to implement `esp_wake_deep_sleep()` in your app in order to use deep sleep. It is only necessary if you want to have special behaviour immediately on wake.

If you want to swap between different deep sleep stubs at runtime, it is also possible to do this by calling the `esp_set_deep_sleep_wake_stub()` function. This is not necessary if you only use the default `esp_wake_deep_sleep()` function.

All of these functions are declared in the `esp_deepsleep.h` header under components/esp32.

5.6.3 Loading Code Into RTC Memory

Wake stub code must be resident in RTC Fast Memory. This can be done in one of two ways.

The first way is to use the `RTC_IRAM_ATTR` attribute to place a function into RTC memory:

```
void RTC_IRAM_ATTR esp_wake_deep_sleep(void) {
    esp_default_wake_deep_sleep();
    // Add additional functionality here
}
```

The second way is to place the function into any source file whose name starts with `rtc_wake_stub`. Files names `rtc_wake_stub*` have their contents automatically put into RTC memory by the linker.

The first way is simpler for very short and simple code, or for source files where you want to mix "normal" and "RTC" code. The second way is simpler when you want to write longer pieces of code for RTC memory.

5.6.4 Loading Data Into RTC Memory

Data used by stub code must be resident in RTC memory. The data can be placed in RTC Fast memory or in RTC Slow memory which is also used by the ULP.

Specifying this data can be done in one of two ways:

The first way is to use the `RTC_DATA_ATTR` and `RTC_RODATA_ATTR` to specify any data (writeable or read-only, respectively) which should be loaded into RTC memory:

```
RTC_DATA_ATTR int wake_count;

void RTC_IRAM_ATTR esp_wake_deep_sleep(void) {
    esp_default_wake_deep_sleep();
    static RTC_RODATA_ATTR const char fmt_str[] = "Wake count %d\n";
    ets_printf(fmt_str, wake_count++);
}
```

The RTC memory area where this data will be placed can be configured via menuconfig option named `CONFIG_ESP32_RTCDATA_IN_FAST_MEM`. This option allows to keep slow memory area for ULP programs and once it is enabled the data marked with `RTC_DATA_ATTR` and `RTC_RODATA_ATTR` are placed in the RTC fast memory segment otherwise it goes to RTC slow memory (default option). This option depends on the `CONFIG_FREERTOS_UNICORE` because RTC fast memory can be accessed only by PRO_CPU.

The similar attributes `RTC_FAST_ATTR` and `RTC_SLOW_ATTR` can be used to specify data that will be force placed into RTC_FAST and RTC_SLOW memory respectively. Any access to data marked with `RTC_FAST_ATTR` is allowed by PRO_CPU only and it is responsibility of user to make sure about it.

Unfortunately, any string constants used in this way must be declared as arrays and marked with RTC_RODATA_ATTR, as shown in the example above.

The second way is to place the data into any source file whose name starts with `rtc_wake_stub`.

For example, the equivalent example in `rtc_wake_stub_counter.c`:

```
int wake_count;

void RTC_IRAM_ATTR esp_wake_deep_sleep(void) {
    esp_default_wake_deep_sleep();
    ets_printf("Wake count %d\n", wake_count++);
}
```

The second way is a better option if you need to use strings, or write other more complex code.

5.7 ESP32 Core Dump

5.7.1 Overview

ESP-IDF provides support to generate core dumps on unrecoverable software errors. This useful technique allows post-mortem analysis of software state at the moment of failure. Upon the crash system enters panic state, prints some information and halts or reboots depending configuration. User can choose to generate core dump in order to analyse the reason of failure on PC later on. Core dump contains snapshots of all tasks in the system at the moment of failure. Snapshots include tasks control blocks (TCB) and stacks. So it is possible to find out what task, at what instruction (line of code) and what callstack of that task lead to the crash. ESP-IDF provides special script *espcoredump.py* to help users to retrieve and analyse core dumps. This tool provides two commands for core dumps analysis:

- info_corefile - prints crashed task' s registers, callstack, list of available tasks in the system, memory regions and contents of memory stored in core dump (TCBs and stacks)
- dbg_corefile - creates core dump ELF file and runs GDB debug session with this file. User can examine memory, variables and tasks states manually. Note that since not all memory is saved in core dump only values of variables allocated on stack will be meaningfull

5.7.2 Configuration

There are a number of core dump related configuration options which user can choose in configuration menu of the application (*make menuconfig*).

1. Core dump data destination (*Components -> ESP32-specific config -> Core dump -> Data destination*):
   - Disable core dump generation
   - Save core dump to flash
   - Print core dump to UART
2. Maximum number of tasks snapshots in core dump (*Components -> ESP32-specific config -> Core dump -> Maximum number of tasks*).

3. Delay before core dump is printed to UART (*Components -> ESP32-specific config -> Core dump -> Delay before print to UART*). Value is in ms.

5.7.3 Save core dump to flash

When this option is selected core dumps are saved to special partition on flash. When using default partition table files which are provided with ESP-IDF it automatically allocates necessary space on flash, But if user wants to use its own layout file together with core dump feature it should define separate partition for core dump as it is shown below:

```
# Name,   Type, SubType, Offset,  Size
# Note: if you change the phy_init or app partition offset, make sure to change the␣
↪offset in Kconfig.projbuild
nvs,      data, nvs,     0x9000,  0x6000
phy_init, data, phy,     0xf000,  0x1000
factory,  app,  factory, 0x10000, 1M
coredump, data, coredump,,        64K
```

There are no special requrements for partition name. It can be choosen according to the user application needs, but partition type should be 'data' and sub-type should be 'coredump'. Also when choosing partition size note that core dump data structure introduces constant overhead of 20 bytes and per-task overhead of 12 bytes. This overhead does not include size of TCB and stack for every task. So partirion size should be at least 20 + max tasks number x (12 + TCB size + max task stack size) bytes.

The example of generic command to analyze core dump from flash is: *espcoredump.py -p </path/to/serial/port> info_corefile </path/to/program/elf/file>* or *espcoredump.py -p </path/to/serial/port> dbg_corefile </path/to/program/elf/file>*

5.7.4 Print core dump to UART

When this option is selected base64-encoded core dumps are printed on UART upon system panic. In this case user should save core dump text body to some file manually and then run the following command: *espcoredump.py info_corefile -t b64 -c </path/to/saved/base64/text> </path/to/program/elf/file>* or *espcoredump.py dbg_corefile -t b64 -c </path/to/saved/base64/text> </path/to/program/elf/file>*

Base64-encoded body of core dump will be between the following header and footer:

```
================= CORE DUMP START =================
<body of base64-encoded core dump, save it to file on disk>
================= CORE DUMP END ===================
```

The *CORE DUMP START* and *CORE DUMP END* lines must not be included in core dump text file.

5.7.5 ROM Functions in Backtraces

It is possible situation that at the moment of crash some tasks or/and crashed task itself have one or more ROM functions in their callstacks. Since ROM is not part of the program ELF it will be impossible for GDB to parse such callstacks, because it tries to analyse functions' prologues to acomplish that. In that case callstack printing will be broken with error message at the first ROM function. To overcome this issue you can use ROM ELF provided by Espressif (https://dl.espressif.com/dl/esp32_rom.elf) and pass it to 'espcoredump.py' .

5.7.6 Running 'espcoredump.py'

Generic command syntax:

espcoredump.py [options] command [args]

Script Options

- –chip,-c {auto,esp32}. Target chip type. Supported values are *auto* and *esp32*.
- –port,-p PORT. Serial port device.
- –baud,-b BAUD. Serial port baud rate used when flashing/reading.

Commands

- info_corefile. Retrieve core dump and print useful info.
- dbg_corefile. Retrieve core dump and start GDB session with it.

Command Arguments

- –debug,-d DEBUG. Log level (0..3).
- –gdb,-g GDB. Path to gdb to use for data retrieval.
- –core,-c CORE. Path to core dump file to use (if skipped core dump will be read from flash).
- –core-format,-t CORE_FORMAT. Specifies that file passed with "-c" is an ELF ("elf"), dumped raw binary ("raw") or base64-encoded ("b64") format.
- –off,-o OFF. Offset of coredump partition in flash (type *make partition_table* to see it).
- –save-core,-s SAVE_CORE. Save core to file. Othwerwise temporary core file will be deleted. Ignored with "-c" .
- –rom-elf,-r ROM_ELF. Path to ROM ELF file to use (if skipped "esp32_rom.elf" is used).
- –print-mem,-m Print memory dump. Used only with "info_corefile" .

5.8 Flash Encryption

Flash Encryption is a feature for encrypting the contents of the ESP32' s attached SPI flash. When flash encryption is enabled, physical readout of the SPI flash is not sufficient to recover most flash contents.

Flash Encryption is separate from the *Secure Boot* feature, and you can use flash encryption without enabling secure boot. However, **for a secure environment both should be used simultaneously**.

When using any non-default configuration in production, additional steps may also be needed to ensure effectiveness of flash encryption. See *Securing Flash Encryption* for more details.

重要: Enabling flash encryption limits your options for further updates of your ESP32. Make sure to read this document (including *Limitations of Flash Encryption*) and understand the implications of enabling flash encryption.

注解: Flash encryption is only supported when using the default GNU Make build system. The CMake build system preview in ESP-IDF v3.x does not support flash encryption.

5.8.1 Background

- The contents of the flash are encrypted using AES-256. The flash encryption key is stored in efuse internal to the chip, and is (by default) protected from software access.
- Flash access is transparent via the flash cache mapping feature of ESP32 - any flash regions which are mapped to the address space will be transparently decrypted when read.
- Encryption is applied by flashing the ESP32 with plaintext data, and (if encryption is enabled) the bootloader encrypts the data in place on first boot.
- Not all of the flash is encrypted. The following kinds of flash data are encrypted:
  - Bootloader
  - Secure boot bootloader digest (if secure boot is enabled)
  - Partition Table
  - All "app" type partitions
  - Any partition marked with the "encrypted" flag in the partition table

    It may be desirable for some data partitions to remain unencrypted for ease of access, or to use flash-friendly update algorithms that are ineffective if the data is encrypted. NVS partitions for non-volatile storage cannot be encrypted since NVS library is not directly compatible with flash encryption. Refer to *NVS Encryption* for more details.

- The flash encryption key is stored in efuse key block 1, internal to the ESP32 chip. By default, this key is read- and write-protected so software cannot access it or change it.
- By default, the Efuse Block 1 Coding Scheme is "None" and a 256 bit key is stored in this block. On some ESP32s, the Coding Scheme is set to 3/4 Encoding (CODING_SCHEME efuse has value 1) and a 192 bit key must be stored in this block. See ESP32 Technical Reference Manual section 20.3.1.3 *System Parameter coding_scheme* for more details. The algorithm operates on a 256 bit key in all cases, 192 bit keys are extended by repeating some bits (*details*). The coding scheme is shown in the `Features` line when `esptool.py` connects to the chip, or in the `espefuse.py summary` output.
- The *flash encryption algorithm* is AES-256, where the key is "tweaked" with the offset address of each 32 byte block of flash. This means every 32 byte block (two consecutive 16 byte AES blocks) is encrypted with a unique key derived from the flash encryption key.
- Although software running on the chip can transparently decrypt flash contents, by default it is made impossible for the UART bootloader to decrypt (or encrypt) data when flash encryption is enabled.
- If flash encryption may be enabled, the programmer must take certain precautions when writing code that *uses encrypted flash*.

5.8.2 Storing Encrypted Data

Aside from encrypting the firmware binary, the app may need to store some sensitive data in an encrypted form. For example, in a filesystem or NVS data partition.

The recommended way to do this is to use *NVS Encryption* .

Alternatively, it is possible to use the *Wear Levelling feature* with an encrypted partition, if the "encrypted" flag is set on the partition. This allows, for example, a VFAT partition to be stored encrypted in flash.

The following are **not suitable** and will store data where an attacker with physical access can read it out:

- Custom efuse fields (these can be write protected against modification but not read protected if the app needs to read them)
- SPIFFS (SPIFFS is optimized for the read and write behavior of NOR flash, so it' s not possible to encrypt this filesystem)

5.8.3 Flash Encryption Initialisation

This is the default (and recommended) flash encryption initialisation process. It is possible to customise this process for development or other purposes, see *Advanced Features* for details.

重要: Once flash encryption is enabled on first boot, the hardware allows a maximum of 3 subsequent flash updates via serial re-flashing. A special procedure (documented in *Serial Flashing*) must be followed

to perform these updates.

- If secure boot is enabled, physical reflashing with plaintext data requires a "Reflashable" secure boot digest (see *Flash Encryption & Secure Boot*).
- OTA updates can be used to update flash content without counting towards this limit.
- When enabling flash encryption in development, use a *pregenerated flash encryption key* to allow physically re-flashing an unlimited number of times with pre-encrypted data.**

Process to enable flash encryption:

- The bootloader must be compiled with flash encryption support enabled. In `make menuconfig`, navigate to "Security Features" and select "Yes" for "Enable flash encryption on boot" .
- If enabling Secure Boot at the same time, it is best to simultaneously select those options now. Read the *Secure Boot* documentation first.
- Build and flash the bootloader, partition table and factory app image as normal. These partitions are initially written to the flash unencrypted.

注解: The bootloader app binary `bootloader.bin` may become too large when both secure boot and flash encryption are enabled. See *Bootloader Size*.

- On first boot, the bootloader sees *FLASH_CRYPT_CNT efuse* is set to 0 (factory default) so it generates a flash encryption key using the hardware random number generator. This key is stored in efuse. The key is read and write protected against further software access.
- All of the encrypted partitions are then encrypted in-place by the bootloader. Encrypting in-place can take some time (up to a minute for large partitions.)

重要: Do not interrupt power to the ESP32 while the first boot encryption pass is running. If power is interrupted, the flash contents will be corrupted and require flashing with unencrypted data again. A reflash like this will not count towards the flashing limit.

- Once flashing is complete. efuses are blown (by default) to disable encrypted flash access while the UART bootloader is running. See *Enabling UART Bootloader Encryption/Decryption* for advanced details.
- The `FLASH_CRYPT_CONFIG` efuse is also burned to the maximum value (`0xF`) to maximise the number of key bits which are tweaked in the flash algorithm. See *Setting FLASH_CRYPT_CONFIG* for advanced details.
- Finally, the *FLASH_CRYPT_CNT efuse* is burned with the initial value 1. It is this efuse which activates the transparent flash encryption layer, and limits the number of subsequent reflashes. See

the *Updating Encrypted Flash* section for details about *FLASH_CRYPT_CNT efuse*.

- The bootloader resets itself to reboot from the newly encrypted flash.

5.8.4 Using Encrypted Flash

ESP32 app code can check if flash encryption is currently enabled by calling `esp_flash_encryption_enabled()`.

Once flash encryption is enabled, some care needs to be taken when accessing flash contents from code.

Scope of Flash Encryption

Whenever the *FLASH_CRYPT_CNT efuse* is set to a value with an odd number of bits set, all flash content which is accessed via the MMU' s flash cache is transparently decrypted. This includes:

- Executable application code in flash (IROM).
- All read-only data stored in flash (DROM).
- Any data accessed via `esp_spi_flash_mmap()`.
- The software bootloader image when it is read by the ROM bootloader.

重要: The MMU flash cache unconditionally decrypts all data. Data which is stored unencrypted in the flash will be "transparently decrypted" via the flash cache and appear to software like random garbage.

Reading Encrypted Flash

To read data without using a flash cache MMU mapping, we recommend using the partition read function `esp_partition_read()`. When using this function, data will only be decrypted when it is read from an encrypted partition. Other partitions will be read unencrypted. In this way, software can access encrypted and non-encrypted flash in the same way.

Data which is read via other SPI read APIs are not decrypted:

- Data read via `esp_spi_flash_read()` is not decrypted
- Data read via ROM function `SPIRead()` is not decrypted (this function is not supported in esp-idf apps).
- Data stored using the Non-Volatile Storage (NVS) API is always stored and read decrypted from the perspective of Flash Encryption. It is up to the library to provide encryption feature if required. Refer to *NVS Encryption* for more details.

Writing Encrypted Flash

Where possible, we recommend using the partition write function `esp_partition_write`. When using this function, data will only be encrypted when writing to encrypted partitions. Data will be written to other partitions unencrypted. In this way, software can access encrypted and non-encrypted flash in the same way.

The `esp_spi_flash_write` function will write data when the write_encrypted parameter is set to true. Otherwise, data will be written unencrypted.

The ROM function `esp_rom_spiflash_write_encrypted` will write encrypted data to flash, the ROM function `SPIWrite` will write unencrypted to flash. (these function are not supported in esp-idf apps).

The minimum write size for unencrypted data is 4 bytes (and the alignment is 4 bytes). Because data is encrypted in blocks, the minimum write size for encrypted data is 16 bytes (and the alignment is 16 bytes.)

5.8.5 Updating Encrypted Flash

OTA Updates

OTA updates to encrypted partitions will automatically write encrypted, as long as the `esp_partition_write` function is used.

Serial Flashing

The *FLASH_CRYPT_CNT efuse* allows the flash to be updated with new plaintext data via serial flashing (or other physical methods), up to 3 additional times.

The process involves flashing plaintext data, and then bumping the value of *FLASH_CRYPT_CNT efuse* which causes the bootloader to re-encrypt this data.

Limited Updates

Only 4 plaintext serial update cycles of this kind are possible, including the initial encrypted flash.

After the fourth time encryption is enabled, *FLASH_CRYPT_CNT efuse* has the maximum value `0x7F` (7 bits set) and encryption is permanently enabled.

Using *OTA Updates* or *Reflashing via Pregenerated Flash Encryption Key* allows you to exceed this limit.

. _flash-encrypt-best-practices:

Best Practices

When using Flash Encryption in production:

- Do not reuse the same flash encryption key between multiple devices. This means that an attacker who copies encrypted data from one device cannot transfer it to a second device.
- When using ESP32 V3, if the UART ROM Download Mode is not needed for a production device then it should be disabled to provide an extra level of protection. Do this by calling *esp_efuse_disable_rom_download_mode()* during application startup. Alternatively, configure the project *CONFIG_ESP32_REV_MIN* level to 3 (targeting ESP32 V3 only) and enable *CONFIG_SECURE_DISABLE_ROM_DL_MODE*. The ability to disable ROM Download Mode is not available on earlier ESP32 versions.
- Enable *Secure Boot* as an extra layer of protection, and to prevent an attacker from selectively corrupting any part of the flash before boot.

Cautions With Serial Flashing

- When reflashing via serial, reflash every partition that was initially written with plaintext data (including bootloader). It is possible to skip app partitions which are not the "currently selected" OTA partition (these will not be re-encrypted unless a plaintext app image is found there.) However any partition marked with the "encrypt" flag will be unconditionally re-encrypted, meaning that any already encrypted data will be encrypted twice and corrupted.
  - Using `make flash` should flash all partitions which need to be flashed.
- If secure boot is enabled, you can' t reflash plaintext data via serial at all unless you used the "Reflashable" option for Secure Boot. See *Flash Encryption & Secure Boot*.

Serial Re-Flashing Procedure

- Build the application as usual.
- Flash the device with plaintext data as usual (`make flash` or `esptool.py` commands.) Flash all previously encrypted partitions, including the bootloader (see previous section).
- At this point, the device will fail to boot (message is `flash read err, 1000`) because it expects to see an encrypted bootloader, but the bootloader is plaintext.
- Burn the *FLASH_CRYPT_CNT efuse* by running the command `espefuse.py burn_efuse FLASH_CRYPT_CNT`. espefuse.py will automatically increment the bit count by 1, which disables encryption.
- Reset the device and it will re-encrypt plaintext partitions, then burn the *FLASH_CRYPT_CNT efuse* again to re-enable encryption.

To prevent any further serial updates, see *Securing Flash Encryption*.

Reflashing via Pregenerated Flash Encryption Key

It is possible to pregenerate a flash encryption key on the host computer and burn it into the ESP32's efuse key block. This allows data to be pre-encrypted on the host and flashed to the ESP32 without needing a plaintext flash update.

This is useful for development, because it removes the 4 time reflashing limit. It also allows reflashing the app with secure boot enabled, because the bootloader doesn't need to be reflashed each time.

重要: This method is intended to assist with development only, not for production devices. If pre-generating flash encryption for production, ensure the keys are generated from a high quality random number source and do not share the same flash encryption key across multiple devices.

Pregenerating a Flash Encryption Key

Flash encryption keys are 32 bytes of random data. You can generate a random key with espsecure.py:

```
espsecure.py generate_flash_encryption_key my_flash_encryption_key.bin
```

(The randomness of this data is only as good as the OS and it's Python installation's random data source.)

Alternatively, if you're using *secure boot* and have a *secure boot signing key* then you can generate a deterministic SHA-256 digest of the secure boot private signing key and use this as the flash encryption key:

```
espsecure.py digest_private_key --keyfile secure_boot_signing_key.pem --keylen 256 my_
↪flash_encryption_key.bin
```

(The same 32 bytes is used as the secure boot digest key if you enable *reflashable mode* for secure boot.)

Generating the flash encryption key from the secure boot signing key in this way means that you only need to store one key file. However this method is **not at all suitable** for production devices.

Burning Flash Encryption Key

Once you have generated a flash encryption key, you need to burn it to the ESP32's efuse key block. **This must be done before first encrypted boot**, otherwise the ESP32 will generate a random key that software can't access or modify.

To burn a key to the device (one time only):

```
espefuse.py --port PORT burn_key flash_encryption my_flash_encryption_key.bin
```

First Flash with pregenerated key

After flashing the key, follow the same steps as for default *Flash Encryption Initialisation* and flash a plaintext image for the first boot. The bootloader will enable flash encryption using the pre-burned key and encrypt all partitions.

Reflashing with pregenerated key

After encryption is enabled on first boot, reflashing an encrypted image requires an additional manual step. This is where we pre-encrypt the data that we wish to update in flash.

Suppose that this is the normal command used to flash plaintext data:

```
esptool.py --port /dev/ttyUSB0 --baud 115200 write_flash 0x10000 build/my-app.bin
```

Binary app image `build/my-app.bin` is written to offset `0x10000`. This file name and offset need to be used to encrypt the data, as follows:

```
espsecure.py encrypt_flash_data --keyfile my_flash_encryption_key.bin --address 0x10000 -
↪o build/my-app-encrypted.bin build/my-app.bin
```

This example command will encrypts `my-app.bin` using the supplied key, and produce an encrypted file `my-app-encrypted.bin`. Be sure that the address argument matches the address where you plan to flash the binary.

Then, flash the encrypted binary with esptool.py:

```
esptool.py --port /dev/ttyUSB0 --baud 115200 write_flash 0x10000 build/my-app-encrypted.
↪bin
```

No further steps or efuse manipulation is necessary, because the data is already encrypted when we flash it.

5.8.6 Disabling Flash Encryption

If you've accidentally enabled flash encryption for some reason, the next flash of plaintext data will soft-brick the ESP32 (the device will reboot continously, printing the error `flash read err, 1000`).

You can disable flash encryption again by writing *FLASH_CRYPT_CNT efuse*:

- First, run `make menuconfig` and uncheck "Enable flash encryption boot" under "Security Features".
- Exit menuconfig and save the new configuration.
- Run `make menuconfig` again and double-check you really disabled this option! *If this option is left enabled, the bootloader will immediately re-enable encryption when it boots.*

- Run `make flash` to build and flash a new bootloader and app, without flash encryption enabled.
- **Run `espefuse.py` (in `components/esptool_py/esptool`) to disable the *FLASH_CRYPT_CNT efuse*)::**
  espefuse.py burn_efuse FLASH_CRYPT_CNT

Reset the ESP32 and flash encryption should be disabled, the bootloader will boot as normal.

5.8.7 Limitations of Flash Encryption

Flash encryption protects firmware against unauthorised readout and modification. It is important to understand the limitations of the flash encryption feature:

- Flash encryption is only as strong as the key. For this reason, we recommend keys are generated on the device during first boot (default behaviour). If generating keys off-device, ensure proper procedure is followed and don't share the same key between all production devices.
- Not all data is stored encrypted. If storing data on flash, check if the method you are using (library, API, etc.) supports flash encryption.
- Flash encryption does not prevent an attacker from understanding the high-level layout of the flash. This is because the same AES key is used for every pair of adjacent 16 byte AES blocks. When these adjacent 16 byte blocks contain identical content (such as empty or padding areas), these blocks will encrypt to produce matching pairs of encrypted blocks. This may allow an attacker to make high-level comparisons between encrypted devices (i.e. to tell if two devices are probably running the same firmware version).
- For the same reason, an attacker can always tell when a pair of adjacent 16 byte blocks (32 byte aligned) contain two identical 16 byte sequences. Keep this in mind if storing sensitive data on the flash, design your flash storage so this doesn't happen (using a counter byte or some other non-identical value every 16 bytes is sufficient). *NVS Encryption* deals with this and is suitable for many uses.
- Flash encryption alone may not prevent an attacker from modifying the firmware of the device. To prevent unauthorised firmware from running on the device, use flash encryption in combination with *Secure Boot*.

5.8.8 Flash Encryption & Secure Boot

It is recommended to use flash encryption and secure boot together. However, if Secure Boot is enabled then additional restrictions apply to reflashing the device:

- *OTA Updates* are not restricted (provided the new app is signed correctly with the Secure Boot signing key).
- *Plaintext serial flash updates* are only possible if the *Reflashable* Secure Boot mode is selected and a Secure Boot key was pre-generated and burned to the ESP32 (refer to *Secure Boot* docs.). In this configuration, `make bootloader` will produce a pre-digested bootloader and secure boot digest file for

flashing at offset 0x0. When following the plaintext serial reflashing steps it is necessary to re-flash this file before flashing other plaintext data.

- *Reflashing via Pregenerated Flash Encryption Key* is still possible, provided the bootloader is not reflashed. Reflashing the bootloader requires the same *Reflashable* option to be enabled in the Secure Boot config.

5.8.9 Securing Flash Encryption

In a production setting it' s important to ensure that flash encryption cannot be temporarily disabled.

This is because if the *Secure Boot* feature is not enabled, or if Secure Boot is somehow bypassed by an attacker, then unauthorised code can be written to flash in plaintext. This code can then re-enable encryption and access encrypted data, making flash encryption ineffective.

This problem must be avoided by write-protecting *FLASH_CRYPT_CNT efuse* and thereby keeping flash encryption permanently enabled.

The simplest way to do this is to enable the configuration option *CONFIG_FLASH_ENCRYPTION_DISABLE_PLAINTEXT* (enabled by default if Secure Boot is enabled). This option causes *FLASH_CRYPT_CNT efuse* to be write protected during initial app startup, or during first boot when the bootloader enables flash encryption. This includes if an app with this option is OTA updated.

Alternatively, *FLASH_CRYPT_CNT efuse* can be write-protected using the serial bootloader:

```
espefuse.py --port PORT write_protect_efuse FLASH_CRYPT_CNT
```

A third option with more flexibility: the app can call `esp_flash_write_protect_crypt_cnt()` at a convenient time during its startup or provisioning process.

5.8.10 Advanced Features

The following information is useful for advanced use of flash encryption:

Encrypted Partition Flag

Some partitions are encrypted by default. Otherwise, it is possible to mark any partition as requiring encryption:

In the *partition table* description CSV files, there is a field for flags.

Usually left blank, if you write "encrypted" in this field then the partition will be marked as encrypted in the partition table, and data written here will be treated as encrypted (same as an app partition):

```
# Name,   Type, SubType, Offset,  Size, Flags
nvs,      data, nvs,     0x9000,  0x6000
phy_init, data, phy,     0xf000,  0x1000
factory,  app,  factory, 0x10000, 1M
secret_data, 0x40, 0x01, 0x20000, 256K, encrypted
```

- None of the default partition tables include any encrypted data partitions.
- It is not necessary to mark "app" partitions as encrypted, they are always treated as encrypted.
- The "encrypted" flag does nothing if flash encryption is not enabled.
- It is possible to mark the optional `phy` partition with `phy_init` data as encrypted, if you wish to protect this data from physical access readout or modification.
- It is not possible to mark the `nvs` partition as encrypted.

Enabling UART Bootloader Encryption/Decryption

By default, on first boot the flash encryption process will burn efuses `DISABLE_DL_ENCRYPT`, `DISABLE_DL_DECRYPT` and `DISABLE_DL_CACHE`:

- `DISABLE_DL_ENCRYPT` disables the flash encryption operations when running in UART bootloader boot mode.
- `DISABLE_DL_DECRYPT` disables transparent flash decryption when running in UART bootloader mode, even if *FLASH_CRYPT_CNT efuse* is set to enable it in normal operation.
- `DISABLE_DL_CACHE` disables the entire MMU flash cache when running in UART bootloader mode.

It is possible to burn only some of these efuses, and write-protect the rest (with unset value 0) before the first boot, in order to preserve them. For example:

```
espefuse.py --port PORT burn_efuse DISABLE_DL_DECRYPT
espefuse.py --port PORT write_protect_efuse DISABLE_DL_ENCRYPT
```

(Note that all 3 of these efuses are disabled via one write protect bit, so write protecting one will write protect all of them. For this reason, it's necessary to set any bits before write-protecting.)

重要: Write protecting these efuses to keep them unset is not currently very useful, as `esptool.py` does not support writing or reading encrypted flash.

重要: If `DISABLE_DL_DECRYPT` is left unset (0) this effectively makes flash encryption useless, as an attacker with physical access can use UART bootloader mode (with custom stub code) to read out the flash contents.

Setting FLASH_CRYPT_CONFIG

The `FLASH_CRYPT_CONFIG` efuse determines the number of bits in the flash encryption key which are "tweaked" with the block offset. See *Flash Encryption Algorithm* for details.

First boot of the bootloader always sets this value to the maximum *0xF*.

It is possible to write these efuse manually, and write protect it before first boot in order to select different tweak values. This is not recommended.

It is strongly recommended to never write protect `FLASH_CRYPT_CONFIG` when it the value is zero. If this efuse is set to zero, no bits in the flash encryption key are tweaked and the flash encryption algorithm is equivalent to AES ECB mode.

JTAG Debugging

By default, when Flash Encryption is enabled then JTAG debugging is disabled via eFuse. The bootloader does this on first boot, at the same time it enables flash encryption.

See *JTAG with Flash Encryption or Secure Boot* for more information about using JTAG Debugging with Flash Encryption.

5.8.11 Technical Details

The following sections provide some reference information about the operation of flash encryption.

FLASH_CRYPT_CNT efuse

`FLASH_CRYPT_CNT` is a 7-bit efuse field which controls flash encryption. Flash encryption enables or disables based on the number of bits in this efuse which are set to "1":

- When an even number of bits (0,2,4,6) are set: Flash encryption is disabled, any encrypted data cannot be decrypted.
  - If the bootloader was built with "Enable flash encryption on boot" then it will see this situation and immediately re-encrypt the flash wherever it finds unencrypted data. Once done, it sets another bit in the efuse to '1' meaning an odd number of bits are now set.
    1. On first plaintext boot, bit count has brand new value 0 and bootloader changes it to bit count 1 (value 0x01) following encryption.
    2. After next plaintext flash update, bit count is manually updated to 2 (value 0x03). After re-encrypting the bootloader changes efuse bit count to 3 (value 0x07).
    3. After next plaintext flash, bit count is manually updated to 4 (value 0x0F). After re-encrypting the bootloader changes efuse bit count to 5 (value 0x1F).

4. After final plaintext flash, bit count is manually updated to 6 (value 0x3F). After re-encrypting the bootloader changes efuse bit count to 7 (value 0x7F).

- When an odd number of bits (1,3,5,7) are set: Transparent reading of encrypted flash is enabled.
- To avoid use of *FLASH_CRYPT_CNT efuse* state to disable flash encryption, load unauthorised code, then re-enabled flash encryption, secure boot must be used or *FLASH_CRYPT_CNT efuse* must be write-protected.

Flash Encryption Algorithm

- AES-256 operates on 16 byte blocks of data. The flash encryption engine encrypts and decrypts data in 32 byte blocks, two AES blocks in series.
- The main flash encryption key is stored in efuse (BLOCK1) and by default is protected from further writes or software readout.
- AES-256 key size is 256 bits (32 bytes), read from efuse block 1. The hardware AES engine uses the key in reversed byte order to the order stored in the efuse block. - If `CODING_SCHEME` efuse is set to 0 (default "None" Coding Scheme) then the efuse key block is 256 bits and the key is stored as-is (in reversed byte order). - If `CODING_SCHEME` efuse is set to 1 (3/4 Encoding) then the efuse key block is 192 bits (in reversed byte order), so overall entropy is reduced. The hardware flash encryption still operates on a 256-bit key, after being read (and un-reversed), the key is extended by as `key = key[0:255] + key[64:127]`.
- AES algorithm is used inverted in flash encryption, so the flash encryption "encrypt" operation is AES decrypt and the "decrypt" operation is AES encrypt. This is for performance reasons and does not alter the effectiveness of the algorithm.
- Each 32 byte block (two adjacent 16 byte AES blocks) is encrypted with a unique key. The key is derived from the main flash encryption key in efuse, XORed with the offset of this block in the flash (a "key tweak").
- The specific tweak depends on the setting of `FLASH_CRYPT_CONFIG` efuse. This is a 4 bit efuse, where each bit enables XORing of a particular range of the key bits:
  - Bit 1, bits 0-66 of the key are XORed.
  - Bit 2, bits 67-131 of the key are XORed.
  - Bit 3, bits 132-194 of the key are XORed.
  - Bit 4, bits 195-256 of the key are XORed.

  It is recommended that `FLASH_CRYPT_CONFIG` is always left to set the default value *0xF*, so that all key bits are XORed with the block offset. See *Setting FLASH_CRYPT_CONFIG* for details.
- The high 19 bits of the block offset (bit 5 to bit 23) are XORed with the main flash encryption key. This range is chosen for two reasons: the maximum flash size is 16MB (24 bits), and each block is 32 bytes so the least significant 5 bits are always zero.

- There is a particular mapping from each of the 19 block offset bits to the 256 bits of the flash encryption key, to determine which bit is XORed with which. See the variable `_FLASH_ENCRYPTION_TWEAK_PATTERN` in the `espsecure.py` source code for the complete mapping.
- To see the full flash encryption algorithm implemented in Python, refer to the *_flash_encryption_operation()* function in the `espsecure.py` source code.

5.9 ESP-IDF FreeRTOS SMP Changes

5.9.1 Overview

The vanilla FreeRTOS is designed to run on a single core. However the ESP32 is dual core containing a Protocol CPU (known as **CPU 0** or **PRO_CPU**) and an Application CPU (known as **CPU 1** or **APP_CPU**). The two cores are identical in practice and share the same memory. This allows the two cores to run tasks interchangeably between them.

The ESP-IDF FreeRTOS is a modified version of vanilla FreeRTOS which supports symmetric multiprocessing (SMP). ESP-IDF FreeRTOS is based on the Xtensa port of FreeRTOS v8.2.0. This guide outlines the major differences between vanilla FreeRTOS and ESP-IDF FreeRTOS. The API reference for vanilla FreeRTOS can be found via http://www.freertos.org/a00106.html

For information regarding features that are exclusive to ESP-IDF FreeRTOS, see *ESP-IDF FreeRTOS Additions*.

Backported Features: Although ESP-IDF FreeRTOS is based on the Xtensa port of FreeRTOS v8.2.0, a number of FreeRTOS v9.0.0 features have been backported to ESP-IDF.

Tasks and Task Creation: Use *`xTaskCreatePinnedToCore()`* or *`xTaskCreateStaticPinnedToCore()`* to create tasks in ESP-IDF FreeRTOS. The last parameter of the two functions is `xCoreID`. This parameter specifies which core the task is pinned to. Acceptable values are `0` for **PRO_CPU**, `1` for **APP_CPU**, or `tskNO_AFFINITY` which allows the task to run on both.

Round Robin Scheduling: The ESP-IDF FreeRTOS scheduler will skip tasks when implementing Round-Robin scheduling between multiple tasks in the Ready state that are of the same priority. To avoid this behavior, ensure that those tasks either enter a blocked state, or are distributed across a wider range of priorities.

Scheduler Suspension: Suspending the scheduler in ESP-IDF FreeRTOS will only affect the scheduler on the the calling core. In other words, calling *`vTaskSuspendAll()`* on **PRO_CPU** will not prevent **APP_CPU** from scheduling, and vice versa. Use critical sections or semaphores instead for simultaneous access protection.

Tick Interrupt Synchronicity: Tick interrupts of **PRO_CPU** and **APP_CPU** are not synchronized. Do not expect to use *`vTaskDelay()`* or *`vTaskDelayUntil()`* as an accurate method of synchronizing task execution between the two cores. Use a counting semaphore instead as their context switches are not tied to tick interrupts due to preemption.

Critical Sections & Disabling Interrupts: In ESP-IDF FreeRTOS, critical sections are implemented using mutexes. Entering critical sections involve taking a mutex, then disabling the scheduler and interrupts of the calling core. However the other core is left unaffected. If the other core attemps to take same mutex, it will spin until the calling core has released the mutex by exiting the critical section.

Floating Point Aritmetic: The ESP32 supports hardware acceleration of single precision floating point arithmetic (`float`). However the use of hardware acceleration leads to some behavioral restrictions in ESP-IDF FreeRTOS. Therefore, tasks that utilize `float` will automatically be pinned to a core if not done so already. Furthermore, `float` cannot be used in interrupt service routines.

Task Deletion: Task deletion behavior has been backported from FreeRTOS v9.0.0 and modified to be SMP compatible. Task memory will be freed immediately when *vTaskDelete()* is called to delete a task that is not currently running and not pinned to the other core. Otherwise, freeing of task memory will still be delegated to the Idle Task.

Thread Local Storage Pointers & Deletion Callbacks: ESP-IDF FreeRTOS has backported the Thread Local Storage Pointers (TLSP) feature. However the extra feature of Deletion Callbacks has been added. Deletion callbacks are called automatically during task deletion and are used to free memory pointed to by TLSP. Call *vTaskSetThreadLocalStoragePointerAndDelCallback()* to set TLSP and Deletion Callbacks.

Configuring ESP-IDF FreeRTOS: Several aspects of ESP-IDF FreeRTOS can be configured using `make meunconfig` such as running ESP-IDF in Unicore Mode, or configuring the number of Thread Local Storage Pointers each task will have.

5.9.2 Backported Features

The following features have been backported from FreeRTOS v9.0.0 to ESP-IDF.

Static Alocation

This feature has been backported from FreeRTOS v9.0.0 to ESP-IDF. The *CONFIG_SUPPORT_STATIC_ALLOCATION* option must be enabled in *menuconfig* in order for static allocation functions to be available. Once enabled, the following functions can be called···

- *xTaskCreateStatic()* (see *Backporting Notes* below)
- *xQueueCreateStatic*
- *xSemaphoreCreateBinaryStatic*
- *xSemaphoreCreateCountingStatic*
- *xSemaphoreCreateMutexStatic*
- *xSemaphoreCreateRecursiveMutexStatic*
- *xTimerCreateStatic()* (see *Backporting Notes* below)
- *xEventGroupCreateStatic()*

Other Features

- *vTaskSetThreadLocalStoragePointer()* (see *Backporting Notes* below)
- *pvTaskGetThreadLocalStoragePointer()* (see *Backporting Notes* below)
- *vTimerSetTimerID()*
- *xTimerGetPeriod()*
- *xTimerGetExpiryTime()*
- *pcQueueGetName()*
- *uxSemaphoreGetCount*

Backporting Notes

1) *xTaskCreateStatic()* has been made SMP compatible in a similar fashion to *xTaskCreate()* (see *Tasks and Task Creation*). Therefore *xTaskCreateStaticPinnedToCore()* can also be called.

2) Although vanilla FreeRTOS allows the Timer feature's daemon task to be statically allocated, the daemon task is always dynamically allocated in ESP-IDF. Therefore `vApplicationGetTimerTaskMemory` **does not** need to be defined when using statically allocated timers in ESP-IDF FreeRTOS.

3) The Thread Local Storage Pointer feature has been modified in ESP-IDF FreeRTOS to include Deletion Callbacks (see *Thread Local Storage Pointers & Deletion Callbacks*). Therefore the function *vTaskSetThreadLocalStoragePointerAndDelCallback()* can also be called.

5.9.3 Tasks and Task Creation

Tasks in ESP-IDF FreeRTOS are designed to run on a particular core, therefore two new task creation functions have been added to ESP-IDF FreeRTOS by appending `PinnedToCore` to the names of the task creation functions in vanilla FreeRTOS. The vanilla FreeRTOS functions of *xTaskCreate()* and *xTaskCreateStatic()* have led to the addition of *xTaskCreatePinnedToCore()* and *xTaskCreateStaticPinnedToCore()* in ESP-IDF FreeRTOS (see *Backported Features*).

For more details see freertos/task.c

The ESP-IDF FreeRTOS task creation functions are nearly identical to their vanilla counterparts with the exception of the extra parameter known as `xCoreID`. This parameter specifies the core on which the task should run on and can be one of the following values.

- `0` pins the task to **PRO_CPU**
- `1` pins the task to **APP_CPU**
- `tskNO_AFFINITY` allows the task to be run on both CPUs

For example `xTaskCreatePinnedToCore(tsk_callback, "APP_CPU Task", 1000, NULL, 10, NULL, 1)` creates a task of priority 10 that is pinned to **APP_CPU** with a stack size of 1000 bytes. It should be noted that the `uxStackDepth` parameter in vanilla FreeRTOS specifies a task's stack depth in terms of the number of words, whereas ESP-IDF FreeRTOS specifies the stack depth in terms of bytes.

Note that the vanilla FreeRTOS functions *xTaskCreate()* and *xTaskCreateStatic()* have been defined in ESP-IDF FreeRTOS as inline functions which call *xTaskCreatePinnedToCore()* and *xTaskCreateStaticPinnedToCore()* respectively with `tskNO_AFFINITY` as the `xCoreID` value.

Each Task Control Block (TCB) in ESP-IDF stores the `xCoreID` as a member. Hence when each core calls the scheduler to select a task to run, the `xCoreID` member will allow the scheduler to determine if a given task is permitted to run on the core that called it.

5.9.4 Scheduling

The vanilla FreeRTOS implements scheduling in the `vTaskSwitchContext()` function. This function is responsible for selecting the highest priority task to run from a list of tasks in the Ready state known as the Ready Tasks List (described in the next section). In ESP-IDF FreeRTOS, each core will call `vTaskSwitchContext()` independently to select a task to run from the Ready Tasks List which is shared between both cores. There are several differences in scheduling behavior between vanilla and ESP-IDF FreeRTOS such as differences in Round Robin scheduling, scheduler suspension, and tick interrupt synchronicity.

Round Robin Scheduling

Given multiple tasks in the Ready state and of the same priority, vanilla FreeRTOS implements Round Robin scheduling between each task. This will result in running those tasks in turn each time the scheduler is called (e.g. every tick interrupt). On the other hand, the ESP-IDF FreeRTOS scheduler may skip tasks when Round Robin scheduling multiple Ready state tasks of the same priority.

The issue of skipping tasks during Round Robin scheduling arises from the way the Ready Tasks List is implemented in FreeRTOS. In vanilla FreeRTOS, `pxReadyTasksList` is used to store a list of tasks that are in the Ready state. The list is implemented as an array of length `configMAX_PRIORITIES` where each element of the array is a linked list. Each linked list is of type `List_t` and contains TCBs of tasks of the same priority that are in the Ready state. The following diagram illustrates the `pxReadyTasksList` structure.

Each linked list also contains a `pxIndex` which points to the last TCB returned when the list was queried. This index allows the `vTaskSwitchContext()` to start traversing the list at the TCB immediately after `pxIndex` hence implementing Round Robin Scheduling between tasks of the same priority.

In ESP-IDF FreeRTOS, the Ready Tasks List is shared between cores hence `pxReadyTasksList` will contain tasks pinned to different cores. When a core calls the scheduler, it is able to look at the `xCoreID` member of each TCB in the list to determine if a task is allowed to run on calling the core. The ESP-IDF FreeRTOS `pxReadyTasksList` is illustrated below.

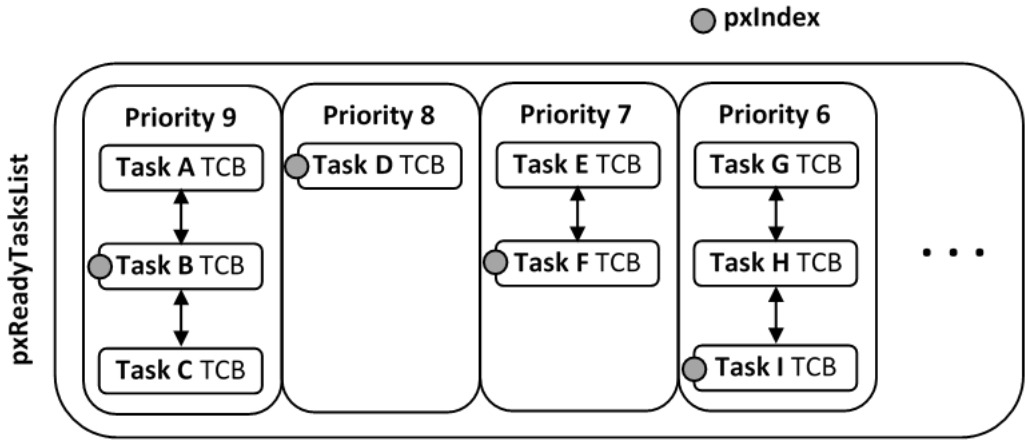

图 2: Illustration of FreeRTOS Ready Task List Data Structure

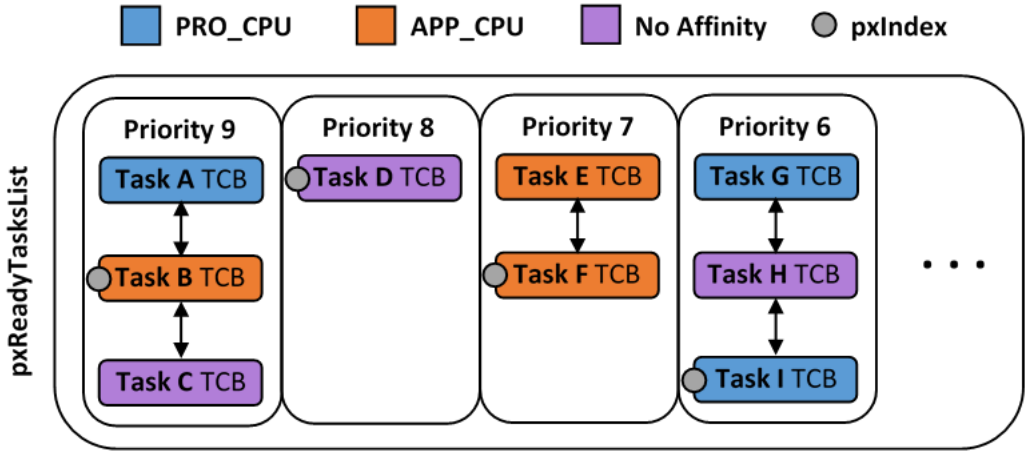

图 3: Illustration of FreeRTOS Ready Task List Data Structure in ESP-IDF

Therefore when **PRO_CPU** calls the scheduler, it will only consider the tasks in blue or purple. Whereas when **APP_CPU** calls the scheduler, it will only consider the tasks in orange or purple.

Although each TCB has an `xCoreID` in ESP-IDF FreeRTOS, the linked list of each priority only has a single `pxIndex`. Therefore when the scheduler is called from a particular core and traverses the linked list, it will skip all TCBs pinned to the other core and point the pxIndex at the selected task. If the other core then calls the scheduler, it will traverse the linked list starting at the TCB immediately after `pxIndex`. Therefore, TCBs skipped on the previous scheduler call from the other core would not be considered on the current scheduler call. This issue is demonstrated in the following illustration.

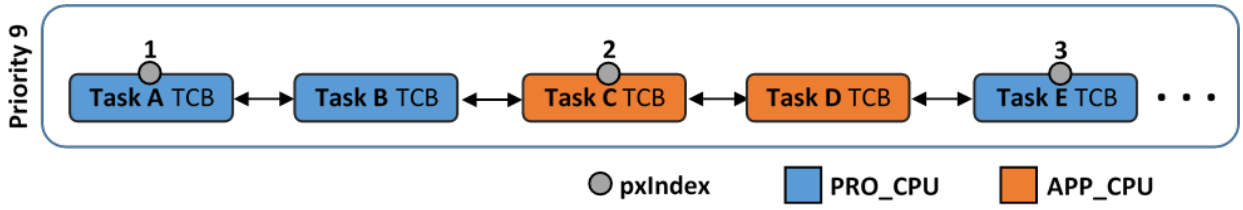

图 4: Illustration of pxIndex behavior in ESP-IDF FreeRTOS

Referring to the illustration above, assume that priority 9 is the highest priority, and none of the tasks in priority 9 will block hence will always be either in the running or Ready state.

1) **PRO_CPU** calls the scheduler and selects Task A to run, hence moves `pxIndex` to point to Task A

2) **APP_CPU** calls the scheduler and starts traversing from the task after `pxIndex` which is Task B. However Task B is not selected to run as it is not pinned to **APP_CPU** hence it is skipped and Task C is selected instead. `pxIndex` now points to Task C

3) **PRO_CPU** calls the scheduler and starts traversing from Task D. It skips Task D and selects Task E to run and points `pxIndex` to Task E. Notice that Task B isn't traversed because it was skipped the last time **APP_CPU** called the scheduler to traverse the list.

4) The same situation with Task D will occur if **APP_CPU** calls the scheduler again as `pxIndex` now points to Task E

One solution to the issue of task skipping is to ensure that every task will enter a blocked state so that they are removed from the Ready Task List. Another solution is to distribute tasks across multiple priorities such that a given priority will not be assigned multiple tasks that are pinned to different cores.

Scheduler Suspension

In vanilla FreeRTOS, suspending the scheduler via *`vTaskSuspendAll()`* will prevent calls of `vTaskSwitchContext` from context switching until the scheduler has been resumed with *`xTaskResumeAll()`*. However servicing ISRs are still permitted. Therefore any changes in task states as a result from the current running task or ISRSs will not be executed until the scheduler is resumed. Scheduler suspension in vanilla FreeRTOS is a common protection method against simultaneous access of data shared between tasks, whilst still allowing ISRs to be serviced.

In ESP-IDF FreeRTOS, *xTaskResumeAll()* will only prevent calls of `vTaskSwitchContext()` from switching contexts on the core that called for the suspension. Hence if **PRO_CPU** calls *vTaskSuspendAll()*, **APP_CPU** will still be able to switch contexts. If data is shared between tasks that are pinned to different cores, scheduler suspension is **NOT** a valid method of protection against simultaneous access. Consider using critical sections (disables interrupts) or semaphores (does not disable interrupts) instead when protecting shared resources in ESP-IDF FreeRTOS.

In general, it's better to use other RTOS primitives like mutex semaphores to protect against data shared between tasks, rather than *vTaskSuspendAll()*.

Tick Interrupt Synchronicity

In ESP-IDF FreeRTOS, tasks on different cores that unblock on the same tick count might not run at exactly the same time due to the scheduler calls from each core being independent, and the tick interrupts to each core being unsynchronized.

In vanilla FreeRTOS the tick interrupt triggers a call to `xTaskIncrementTick()` which is responsible for incrementing the tick counter, checking if tasks which have called *vTaskDelay()* have fulfilled their delay period, and moving those tasks from the Delayed Task List to the Ready Task List. The tick interrupt will then call the scheduler if a context switch is necessary.

In ESP-IDF FreeRTOS, delayed tasks are unblocked with reference to the tick interrupt on PRO_CPU as PRO_CPU is responsible for incrementing the shared tick count. However tick interrupts to each core might not be synchronized (same frequency but out of phase) hence when PRO_CPU receives a tick interrupt, APP_CPU might not have received it yet. Therefore if multiple tasks of the same priority are unblocked on the same tick count, the task pinned to PRO_CPU will run immediately whereas the task pinned to APP_CPU must wait until APP_CPU receives its out of sync tick interrupt. Upon receiving the tick interrupt, APP_CPU will then call for a context switch and finally switches contexts to the newly unblocked task.

Therefore, task delays should **NOT** be used as a method of synchronization between tasks in ESP-IDF FreeRTOS. Instead, consider using a counting semaphore to unblock multiple tasks at the same time.

5.9.5 Critical Sections & Disabling Interrupts

Vanilla FreeRTOS implements critical sections in `vTaskEnterCritical` which disables the scheduler and calls `portDISABLE_INTERRUPTS`. This prevents context switches and servicing of ISRs during a critical section. Therefore, critical sections are used as a valid protection method against simultaneous access in vanilla FreeRTOS.

On the other hand, the ESP32 has no hardware method for cores to disable each other's interrupts. Calling `portDISABLE_INTERRUPTS()` will have no effect on the interrupts of the other core. Therefore, disabling interrupts is **NOT** a valid protection method against simultaneous access to shared data as it leaves the other core free to access the data even if the current core has disabled its own interrupts.

For this reason, ESP-IDF FreeRTOS implements critical sections using mutexes, and calls to enter or exit a critical must provide a mutex that is associated with a shared resource requiring access protection. When entering a critical section in ESP-IDF FreeRTOS, the calling core will disable its scheduler and interrupts similar to the vanilla FreeRTOS implementation. However, the calling core will also take the mutex whilst the other core is left unaffected during the critical section. If the other core attempts to take the same mutex, it will spin until the mutex is released. Therefore, the ESP-IDF FreeRTOS implementation of critical sections allows a core to have protected access to a shared resource without disabling the other core. The other core will only be affected if it tries to concurrently access the same resource.

The ESP-IDF FreeRTOS critical section functions have been modified as follows···

- `taskENTER_CRITICAL(mux)`, `taskENTER_CRITICAL_ISR(mux)`, `portENTER_CRITICAL(mux)`, `portENTER_CRITICAL_ISR(mux)` are all macro defined to call `vTaskEnterCritical()`
- `taskEXIT_CRITICAL(mux)`, `taskEXIT_CRITICAL_ISR(mux)`, `portEXIT_CRITICAL(mux)`, `portEXIT_CRITICAL_ISR(mux)` are all macro defined to call `vTaskExitCritical()`
- `portENTER_CRITICAL_SAFE(mux)`, `portEXIT_CRITICAL_SAFE(mux)` macro identifies the context of execution, i.e ISR or Non-ISR, and calls appropriate critical section functions (`port*_CRITICAL` in Non-ISR and `port*_CRITICAL_ISR` in ISR) in order to be in compliance with Vanilla FreeRTOS.

For more details see freertos/include/freertos/portmacro.h and freertos/task.c

It should be noted that when modifying vanilla FreeRTOS code to be ESP-IDF FreeRTOS compatible, it is trivial to modify the type of critical section called as they are all defined to call the same function. As long as the same mutex is provided upon entering and exiting, the type of call should not matter.

5.9.6 Floating Point Aritmetic

The ESP32 supports hardware acceleration of single precision floating point arithmetic (`float`) via Floating Point Units (FPU, also known as coprocessors) attached to each core. The use of the FPUs imposes some behavioral restrictions on ESP-IDF FreeRTOS.

ESP-IDF FreeRTOS implements Lazy Context Switching for FPUs. In other words, the state of a core' s FPU registers are not immediately saved when a context switch occurs. Therefore, tasks that utilize `float` must be pinned to a particular core upon creation. If not, ESP-IDF FreeRTOS will automatically pin the task in question to whichever core the task was running on upon the task' s first use of `float`. Likewise due to Lazy Context Switching, interrupt service routines must also not use `float`.

ESP32 does not support hardware acceleration for double precision floating point arithmetic (`double`). Instead `double` is implemented via software hence the behavioral restrictions with regards to `float` do not apply to `double`. Note that due to the lack of hardware acceleration, `double` operations may consume significantly larger amount of CPU time in comparison to `float`.

5.9.7 Task Deletion

FreeRTOS task deletion prior to v9.0.0 delegated the freeing of task memory entirely to the Idle Task. Currently, the freeing of task memory will occur immediately (within *vTaskDelete()*) if the task being deleted is not currently running or is not pinned to the other core (with respect to the core *vTaskDelete()* is called on). TLSP deletion callbacks will also run immediately if the same conditions are met.

However, calling *vTaskDelete()* to delete a task that is either currently running or pinned to the other core will still result in the freeing of memory being delegated to the Idle Task.

5.9.8 Thread Local Storage Pointers & Deletion Callbacks

Thread Local Storage Pointers (TLSP) are pointers stored directly in the TCB. TLSP allow each task to have its own unique set of pointers to data structures. However task deletion behavior in vanilla FreeRTOS does not automatically free the memory pointed to by TLSP. Therefore if the memory pointed to by TLSP is not explicitly freed by the user before task deletion, memory leak will occur.

ESP-IDF FreeRTOS provides the added feature of Deletion Callbacks. Deletion Callbacks are called automatically during task deletion to free memory pointed to by TLSP. Each TLSP can have its own Deletion Callback. Note that due to the to *Task Deletion* behavior, there can be instances where Deletion Callbacks are called in the context of the Idle Tasks. Therefore Deletion Callbacks **should never attempt to block** and critical sections should be kept as short as possible to minimize priority inversion.

Deletion callbacks are of type `void (*TlsDeleteCallbackFunction_t)( int, void * )` where the first parameter is the index number of the associated TLSP, and the second parameter is the TLSP itself.

Deletion callbacks are set alongside TLSP by calling *vTaskSetThreadLocalStoragePointerAndDelCallback()*. Calling the vanilla FreeRTOS function *vTaskSetThreadLocalStoragePointer()* will simply set the TLSP's associated Deletion Callback to *NULL* meaning that no callback will be called for that TLSP during task deletion. If a deletion callback is *NULL*, users should manually free the memory pointed to by the associated TLSP before task deletion in order to avoid memory leak.

CONFIG_FREERTOS_THREAD_LOCAL_STORAGE_POINTERS in menuconfig can be used to configure the number TLSP and Deletion Callbacks a TCB will have.

For more details see *FreeRTOS API reference*.

5.9.9 Configuring ESP-IDF FreeRTOS

The ESP-IDF FreeRTOS can be configured using `make menuconfig` under `Component_Config/FreeRTOS`. The following section highlights some of the ESP-IDF FreeRTOS configuration options. For a full list of ESP-IDF FreeRTOS configurations, see *FreeRTOS*

CONFIG_FREERTOS_UNICORE will run ESP-IDF FreeRTOS only on **PRO_CPU**. Note that this is **not equivalent to running vanilla FreeRTOS**. Behaviors of multiple components in ESP-IDF will be

modified such as esp32/cpu_start.c. For more details regarding the effects of running ESP-IDF FreeRTOS on a single core, search for occurences of `CONFIG_FREERTOS_UNICORE` in the ESP-IDF components.

CONFIG_FREERTOS_THREAD_LOCAL_STORAGE_POINTERS will define the number of Thread Local Storage Pointers each task will have in ESP-IDF FreeRTOS.

CONFIG_SUPPORT_STATIC_ALLOCATION will enable the backported functionality of *xTaskCreateStaticPinnedToCore()* in ESP-IDF FreeRTOS

CONFIG_FREERTOS_ASSERT_ON_UNTESTED_FUNCTION will trigger a halt in particular functions in ESP-IDF FreeRTOS which have not been fully tested in an SMP context.

CONFIG_FREERTOS_TASK_FUNCTION_WRAPPER will enclose all task functions within a wrapper function. In the case that a task function mistakenly returns (i.e. does not call *vTaskDelete()*), the call flow will return to the wrapper function. The wrapper function will then log an error and abort the application, as illustrated below:

```
E (25) FreeRTOS: FreeRTOS task should not return. Aborting now!
abort() was called at PC 0x40085c53 on core 0
```

5.10 Thread Local Storage

5.10.1 Overview

Thread-local storage (TLS) is a mechanism by which variables are allocated such that there is one instance of the variable per extant thread. ESP-IDF provides three ways to make use of such variables:

- *FreeRTOS Native API*: ESP-IDF FreeRTOS native API.
- *Pthread API*: ESP-IDF' s pthread API.
- *C11 Standard*: C11 standard introduces special keyword to declare variables as thread local.

5.10.2 FreeRTOS Native API

The ESP-IDF FreeRTOS provides the following API to manage thread local variables:

- *vTaskSetThreadLocalStoragePointer()*
- *pvTaskGetThreadLocalStoragePointer()*
- *vTaskSetThreadLocalStoragePointerAndDelCallback()*

In this case maximum number of variables that can be allocated is limited by `configNUM_THREAD_LOCAL_STORAGE_POINTERS` macro. Variables are kept in the task control block (TCB) and accessed by their index. Note that index 0 is reserved for ESP-IDF internal uses. Using that API user can allocate thread local variables of an arbitrary size and assign them to any number of tasks.

Different tasks can have different sets of TLS variables. If size of the variable is more then 4 bytes then user is responsible for allocating/deallocating memory for it. Variable' s deallocation is initiated by FreeRTOS when task is deleted, but user must provide function (callback) to do proper cleanup.

5.10.3 Pthread API

The ESP-IDF provides the following pthread API to manage thtread local variables:

- `pthread_key_create()`
- `pthread_key_delete()`
- `pthread_getspecific()`
- `pthread_setspecific()`

This API has all benefits of the one above, but eliminates some its limits. The number of variables is limited only by size of available memory on the heap. Due to the dynamic nature this API introduces additional performance overhead compared to the native one.

5.10.4 C11 Standard

The ESP-IDF FreeRTOS supports thread local variables according to C11 standard (ones specified with `__thread` keyword). For details on this GCC feature please see https://gcc.gnu.org/onlinedocs/gcc-5.5.0/gcc/Thread-Local.html#Thread-Local. Storage for that kind of variables is allocated on the task' s stack. Note that area for all such variables in the program will be allocated on the stack of every task in the system even if that task does not use such variables at all. For example ESP-IDF system tasks (like `ipc`, `timer` tasks etc.) will also have that extra stack space allocated. So this feature should be used with care. There is a tradeoff: C11 thread local variables are quite handy to use in programming and can be accessed using just a few Xtensa instructions, but this benefit goes with the cost of additional stack usage for all tasks in the system. Due to static nature of variables allocation all tasks in the system have the same sets of C11 thread local variables.

5.11 High-Level Interrupts

The Xtensa architecture has support for 32 interrupts, divided over 8 levels, plus an assortment of exceptions. On the ESP32, the interrupt mux allows most interrupt sources to be routed to these interrupts using the *interrupt allocator*. Normally, interrupts will be written in C, but ESP-IDF allows high-level interrupts to be written in assembly as well, allowing for very low interrupt latencies.

5.11.1 Interrupt Levels

Level	Symbol	Remark
1	N/A	Exception and level 0 interrupts. Handled by ESP-IDF
2-3	N/A	Medium level interrupts. Handled by ESP-IDF
4	xt_highint4	Normally used by ESP-IDF debug logic
5	xt_highint5	Free to use
NMI	xt_nmi	Free to use
dbg	xt_debugexception	Debug exception. Called on e.g. a BREAK instruction.

Using these symbols is done by creating an assembly file (suffix .S) and defining the named symbols, like this:

```
    .section .iram1,"ax"
    .global     xt_highint5
    .type       xt_highint5,@function
    .align      4
xt_highint5:
    ... your code here
    rsr     a0, EXCSAVE_5
    rfi     5
```

For a real-life example, see the esp32/dport_panic_highint_hdl.S file; the panic handler interrupt is implemented there.

5.11.2 Notes

- Do not call C code from a high-level interrupt; because these interupts still run in critical sections, this can cause crashes. (The panic handler interrupt does call normal C code, but this is OK because there is no intention of returning to the normal code flow afterwards.)
- Make sure your assembly code gets linked in. If the interrupt handler symbol is the only symbol the rest of the code uses from this file, the linker will take the default ISR instead and not link the assembly file into the final project. To get around this, in the assembly file, define a symbol, like this:

```
    .global ld_include_my_isr_file
ld_include_my_isr_file:
```

(The symbol is called `ld_include_my_isr_file` here but can have any arbitrary name not defined anywhere else.) Then, in the component.mk, add this file as an unresolved symbol to the ld command line arguments:

```
COMPONENT_ADD_LDFLAGS := -u ld_include_my_isr_file
```

This should cause the linker to always include a file defining `ld_include_my_isr_file`, causing the ISR to always be linked in.

- High-level interrupts can be routed and handled using esp_intr_alloc and associated functions. The handler and handler arguments to esp_intr_alloc must be NULL, however.
- In theory, medium priority interrupts could also be handled in this way. For now, ESP-IDF does not support this.

5.12 JTAG 调试

[English]

本文将指导安装 ESP32 的 OpenOCD 调试环境，并介绍如何使用 GDB 来调试 ESP32 的应用程序。本文的组织结构如下：

引言 介绍本指南主旨。

工作原理 介绍 ESP32，JTAG（Joint Test Action Group）接口，OpenOCD 和 GDB 是如何相互连接从而实现 ESP32 的调试功能。

选择 *JTAG* 适配器 介绍有关 JTAG 硬件适配器的选择及参照标准。

安装 *OpenOCD* 介绍如何在*Windows*，*Linux* 和*MacOS* 操作系统上安装预编译好的 OpenOCD 软件包。

配置 *ESP32* 目标板 介绍如何设置 OpenOCD 软件并安装 JTAG 硬件适配器，这两者共同组成最终的调试目标。

启动调试器 介绍如何从*Eclipse 集成开发环境* 和*命令行终端* 启动 GDB 调试会话。

调试范例 如果你对 GDB 不太熟悉，本小节会分别针对*Eclipse 集成开发环境* 和*命令行终端* 来讲解调试的范例。

从源码构建 *OpenOCD* 介绍如何在*Windows*，*Linux* 和*MacOS* 操作系统上从源码构建 OpenOCD。

注意事项和补充内容 介绍使用 OpenOCD 和 GDB 通过 JTAG 接口调试 ESP32 时的注意事项和补充内容。

5.12.1 引言

ESP32 具有两个强大的 Xtensa 内核，支持多种程序架构。ESP-IDF 自带的 FreeRTOS 操作系统具有多核抢占式多线程的功能，它允许用户以更加直观的方式编写软件。

与此相对地，简便的编程方式会给程序的调试带来困难（如果没有合适的工具），比如找出由两个线程引起的错误，并且这两个线程在单独的 CPU 核上同时运行，仅凭 `printf` 语句会花费很长的时间来定位到该错误。在大多数情况下，调试此类问题更快的方法是使用调试器，连接到处理器的调试端口。

乐鑫已经为 ESP32 处理器和多核 FreeRTOS 架构移植好了 OpenOCD，它将成为大多数 ESP32 应用程序的基础。此外，乐鑫还提供了一些 OpenOCD 本身并不支持的工具来进一步丰富调试的功能。

本文将指导如何在 Linux，Windows 和 MacOS 环境下为 ESP32 安装 OpenOCD，并使用 GDB 进行软件调试。除了个别操作系统的安装过程有所差别以外，软件用户界面和使用流程都是一样的。

注解： 本文使用的图片素材来自于 Ubuntu 16.04 LTE 上 Eclipse Neon 3 软件的截图，不同的操作系统（Windows，MacOS 或者 Linux）和 Eclipse 软件版本在用户界面上可能会有细微的差别。

5.12.2 工作原理

通过 JTAG（Joint Test Action Group）接口使用 OpenOCD 调试 ESP32 时所需要的一些关键的软件和硬件包括 **xtensa-esp32-elf-gdb 调试器**，**OpenOCD 片上调试器**和连接到 **ESP32** 目标的 **JTAG 适配器**。

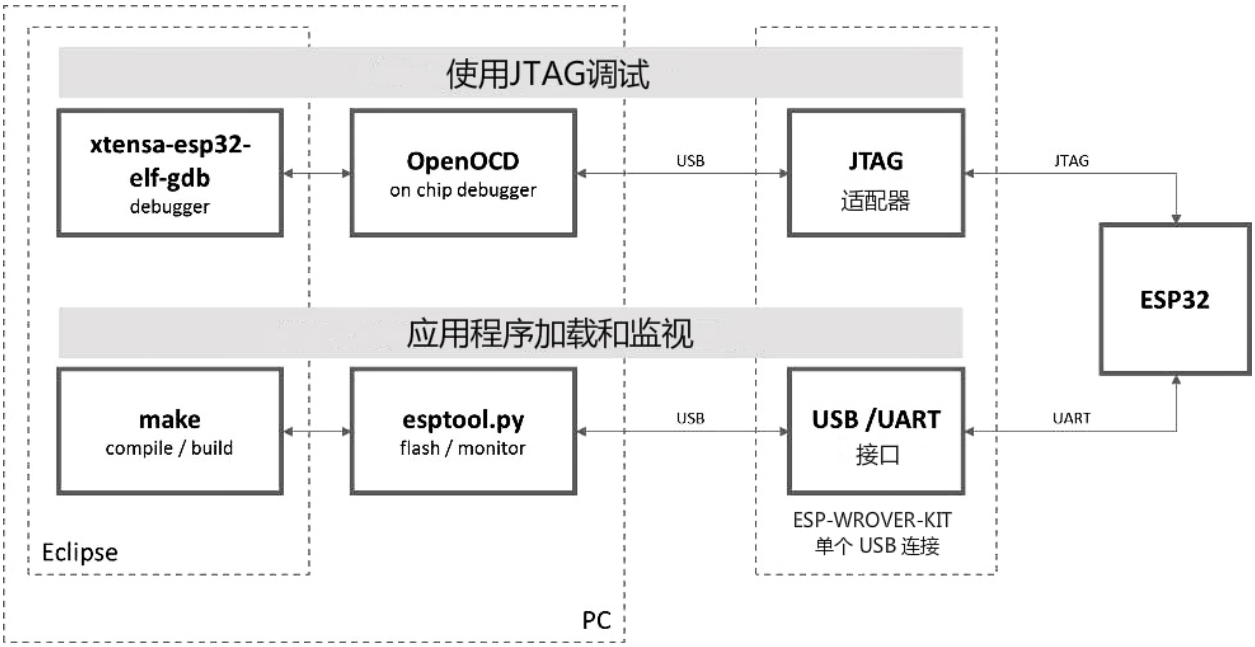

图 5: JTAG 调试 - 概述图

在 “Application Loading and Monitoring” 下还有另外一组软件和硬件，它们用来编译、构建和烧写应用程序到 ESP32 上，以及监视来自 ESP32 的运行诊断信息。

Eclipse 环境集成了 JTAG 调试和应用程序加载、监视的功能，它使得软件从编写、编译、加载到调试的迭代过程变得更加快速而简单。所有的软件均适用于 Windows，Linux 和 MacOS 平台。

如果你使用的是*ESP-WROVER-KIT 开发板*，得益于板载的 FT232H 芯片，PC 和 ESP32 的连接仅仅需要一根 USB 线即可完成。FT232H 提供了两路 USB 通道，一路连接到 JTAG，另一路连接到 UART。

根据用户的喜好，除了使用 Eclipse 集成开发环境，上述的调试工具和构建工具还可以直接在命令行终端运行。

5.12.3 选择 JTAG 适配器

上手 JTAG 最快速便捷的方式是使用*ESP-WROVER-KIT 开发板*，因为它板载了 JTAG 调试接口，无需使用外部的 JTAG 硬件适配器和额外的线缆来连接 JTAG 与 ESP32。ESP-WROVER-KIT 采用 FT2232H 提供的 JTAG 接口，可以稳定运行在 20 MHz 的时钟频率，外接的适配器很难达到这个速度。

如果你想使用单独的 JTAG 适配器，请确保其与 ESP32 的电平电压和 OpenOCD 软件都兼容。ESP32 使用的是业界标准的 JTAG 接口，它省略了（实际上也并不需要）TRST 信号脚。JTAG 使用的 IO 引脚由 VDD_3P3_RTC 电源引脚供电（通常连接到外部 3.3 V 的电源轨），因此 JTAG 硬件适配器的引脚需要能够在该电压范围内正常工作。

在软件方面，OpenOCD 支持相当多数量的 JTAG 适配器，可以参阅 OpenOCD 支持的适配器列表 （尽管上面显示的器件不太完整），这个页面还列出了兼容 SWD 接口的适配器，但是请注意，ESP32 目前并不支持 SWD。此外那些被硬编码为只支持特定产品线的 JTAG 适配器也不能在 ESP32 上工作，比如用于 STM32 产品家族的 ST-LINK 适配器。

JTAG 正常工作至少需要连接的信号线有：TDI，TDO，TCK，TMS 和 GND。某些 JTAG 适配器还需要 ESP32 提供一路电源到适配器的某个引脚上（比如 Vtar）用以设置适配器的工作电压。SRST 信号线是可选的，它可以连接到 ESP32 的 CH_PD 引脚上，尽管目前 OpenOCD 对该信号线的支持还非常有限。

5.12.4 安装 OpenOCD

本节会介绍 OpenOCD 软件包的安装，如果你想从源码构建 OpenOCD，请参阅*从源码构建 OpenOCD*。默认所有 OpenOCD 相关的文件都会被存放到 `~/esp/openocd-esp32` 目录下，你也可以选择任何其它的目录，但相应地，你也需要调整本文档示例中使用的相对路径。

在 Windows 环境下安装 OpenOCD

[English]

IDF 工具安装程序

如果您正在使用 CMake 构建系统，并遵循*Windows 平台工具链的标准设置 (CMake)* 章节的指导使用了 `ESP-IDF Tools Installer` 的 V1.2 及其以上版本，那么默认情况下您已经安装好了 `OpenOCD` 软件。

`ESP-IDF Tools Installer` 会将 `OpenOCD` 添加到环境变量 `PATH` 中，这样你就可以在任何目录运行它。

安装 OpenOCD

Windows 系统版本的 OpenOCD 可以直接从以下 Github 链接中下载：

https://github.com/espressif/openocd-esp32/releases

下载文件名包含 *win32* 字样的最新发布的归档文件，例如 *openocd-esp32-macos-0.10.0-win32-20180418.zip*。

将该文件解压缩到 ~/esp/ 目录下:

```
cd ~/esp
unzip /c/Users/<user>/Downloads/openocd-esp32-win32-<version>.zip
```

下一步

进一下配置调试环境，请前往配置 *ESP32* 目标板 章节。

相关文档

Windows 环境下从源码编译 OpenOCD

[English]

除了从 Espressif 官方 直接下载 OpenOCD 可执行文件，你还可以选择从源码编译得到 OpenOCD。如果想要快速设置 OpenOCD 而不是自行编译，请备份好当前文件，前往在 *Windows* 环境下安装 *OpenOCD* 章节查阅。

下载 OpenOCD 源码

支持 ESP32 的 OpenOCD 源代码可以从乐鑫官方的 GitHub 获得，网址为 https://github.com/espressif/openocd-esp32。请使用以下命令来下载源代码:

```
cd ~/esp
git clone --recursive https://github.com/espressif/openocd-esp32.git
```

克隆后的源代码被保存在 ~/esp/openocd-esp32 目录中。

安装依赖的软件包

安装编译 OpenOCD 所需的软件包。

注解: 依次安装以下软件包，检查安装是否成功，然后继续下一个软件包的安装。在进行下一步操作之前，要先解决当前报告的问题。

```
pacman -S libtool
pacman -S autoconf
pacman -S automake
```

(下页继续)

(续上页)

```
pacman -S texinfo
pacman -S mingw-w64-i686-libusb-compat-git
pacman -S pkg-config
```

注解: 安装 pkg-config 会破坏 esp-idf 的工具链，因而在 OpenOCD 构建完成后，应将其卸载。详见文末进一步说明。如果想要再次构建 OpenOCD，你需要再次运行 pacman -S pkg-config。此步骤安装的其他软件包（在 pkg-config 之前）并不会出现这一问题。

构建 OpenOCD

配置和构建 OpenOCD 的流程如下:

```
cd ~/esp/openocd-esp32
./bootstrap
./configure
make
```

你可以选择最后再执行 sudo make install ，如果你已经安装过别的开发平台的 OpenOCD，请跳过这个步骤，因为它可能会覆盖掉原来的 OpenOCD。

注解:

- 如果发生错误，请解决后再次尝试编译，直到 make 成功为止。
- 如果 OpenOCD 存在子模块问题，请 cd 到 openocd-esp32 目录，并输入 git submodule update --init 命令。
- 如果 ./configure 成功运行，JTAG 被使能的信息会被打印在 OpenOCD configuration summary 下面。
- 如果您的设备信息未显示在日志中，请根据 ../openocd-esp32/doc/INSTALL.txt 文中的描述使用 ./configure 启用它。
- 有关编译 OpenOCD 的详细信息，请参阅 openocd-esp32/README.Windows。

一旦 make 过程成功完成，OpenOCD 的可执行文件会被保存到 ~/esp/openocd-esp32/src/openocd 目录中。

如安装依赖步骤所述，最后还需要移除 pkg-config 软件包:

```
pacman -Rs pkg-config
```

下一步

想要进一步配置调试环境，请前往配置 *ESP32* 目标板 章节。

在 Linux 环境下安装 OpenOCD

[English]

安装 OpenOCD

64 位 Linux 系统版本的 OpenOCD 可以直接从以下 Github 链接中下载：

https://github.com/espressif/openocd-esp32/releases

下载文件名称包含 *linux64* 字样的最新发布的归档文件，例如 *openocd-esp32-linux64-0.10.0-esp32-20180418.tar.gz*。

将该文件解压缩到 `~/esp/` 目录下：

```
cd ~/esp
tar -xzf ~/Downloads/openocd-esp32-linux64-<version>.tar.gz
```

下一步

进一下配置调试环境，请前往配置 *ESP32* 目标板 章节。

相关文档

Linux 环境下从源码编译 OpenOCD

[English]

除了从 Espressif 官方 直接下载 OpenOCD 可执行文件，你还可以选择从源码编译得到 OpenOCD。如果想要快速设置 OpenOCD 而不是自行编译，请备份好当前文件，前往在 *Linux* 环境下安装 *OpenOCD* 章节查阅。

下载 OpenOCD 源码

支持 ESP32 的 OpenOCD 源代码可以从乐鑫官方的 GitHub 获得，网址为 https://github.com/espressif/openocd-esp32。请使用以下命令来下载源代码：

```
cd ~/esp
git clone --recursive https://github.com/espressif/openocd-esp32.git
```

克隆后的源代码被保存在 ~/esp/openocd-esp32 目录中。

安装依赖的软件包

安装编译 OpenOCD 所需的软件包。

注解: 依次安装以下软件包，检查安装是否成功，然后继续下一个软件包的安装。在进行下一步操作之前，要先解决当前报告的问题。

```
sudo apt-get install make
sudo apt-get install libtool
sudo apt-get install pkg-config
sudo apt-get install autoconf
sudo apt-get install automake
sudo apt-get install texinfo
sudo apt-get install libusb-1.0
```

注解:

- pkg-config 应为 0.2.3 或以上的版本。
- autoconf 应为 2.6.4 或以上的版本。
- automake 应为 1.9 或以上的版本。
- 当使用 USB-Blaster，ASIX Presto，OpenJTAG 和 FT2232 作为适配器时，需要下载安装 libFTDI 和 FTD2XX 的驱动。
- 当使用 CMSIS-DAP 时，需要安装 HIDAPI。

构建 OpenOCD

配置和构建 OpenOCD 的流程如下:

```
cd ~/esp/openocd-esp32
./bootstrap
./configure
make
```

你可以选择最后再执行 `sudo make install`，如果你已经安装过别的开发平台的 OpenOCD，请跳过这个步骤，因为它可能会覆盖掉原来的 OpenOCD。

注解:

- 如果发生错误，请解决后再次尝试编译，直到 `make` 成功为止。
- 如果 OpenOCD 存在子模块问题，请 `cd` 到 `openocd-esp32` 目录，并输入 `git submodule update --init` 命令。
- 如果 `./configure` 成功运行，JTAG 被使能的信息会被打印在 `OpenOCD configuration summary` 下面。
- 如果您的设备信息未显示在日志中，请根据 `../openocd-esp32/doc/INSTALL.txt` 文中的描述使用 `./configure` 启用它。
- 有关编译 OpenOCD 的详细信息，请参阅 `openocd-esp32/README`。

一旦 `make` 过程成功结束，OpenOCD 的可执行文件会被保存到 `~/openocd-esp32/bin` 目录中。

下一步

想要进一步配置调试环境，请前往*配置 ESP32 目标板* 章节。

在 MacOS 环境下安装 OpenOCD

[English]

安装 libusb

使用 Homebrew 或者 Macports 来安装 *libusb* 软件包。

安装 OpenOCD

MacOS 系统版本的 OpenOCD 可以直接从以下 Github 链接中下载：

https://github.com/espressif/openocd-esp32/releases

下载文件名包含 *macos* 字样的最新发布的归档文件，例如 *openocd-esp32-macos-0.10.0-esp32-20180418.tar.gz*。

将该文件解压缩到 `~/esp/` 目录下:

```
cd ~/esp
tar -xzf ~/Downloads/openocd-esp32-macos-<version>.tar.gz
```

下一步

进一下配置调试环境，请前往配置 *ESP32* 目标板 章节。

相关文档

MacOS 环境下从源码编译 OpenOCD

[English]

除了从 Espressif 官方 直接下载 OpenOCD 可执行文件，你还可以选择从源码编译得到 OpenOCD。如果想要快速设置 OpenOCD 而不是自行编译，请备份好当前文件，前往在 *MacOS* 环境下安装 *OpenOCD* 章节查阅。

下载 OpenOCD 源码

支持 ESP32 的 OpenOCD 源代码可以从乐鑫官方的 GitHub 获得，网址为 https://github.com/espressif/openocd-esp32。请使用以下命令来下载源代码:

```
cd ~/esp
git clone --recursive https://github.com/espressif/openocd-esp32.git
```

克隆后的源代码被保存在 `~/esp/openocd-esp32` 目录中。

安装依赖的软件包

使用 Homebrew 安装编译 OpenOCD 所需的软件包:

```
brew install automake libtool libusb wget gcc@4.9 pkg-config
```

构建 OpenOCD

配置和构建 OpenOCD 的流程如下:

```
cd ~/esp/openocd-esp32
./bootstrap
./configure
make
```

你可以选择最后再执行 `sudo make install` ，如果你已经安装过别的开发平台的 OpenOCD，请跳过这个步骤，因为它可能会覆盖掉原来的 OpenOCD。

注解:

- 如果发生错误，请解决后再次尝试编译，直到 `make` 成功为止。
- 如果 OpenOCD 存在子模块问题，请 `cd` 到 `openocd-esp32` 目录，并输入 `git submodule update --init` 命令。
- 如果 `./configure` 成功运行，JTAG 被使能的信息会被打印在 `OpenOCD configuration summary` 下面。
- 如果您的设备信息未显示在日志中，请根据 `../openocd-esp32/doc/INSTALL.txt` 文中的描述使用 `./configure` 启用它。
- 有关编译 OpenOCD 的详细信息，请参阅 `openocd-esp32/README.OSX`。

一旦 `make` 过程成功结束，OpenOCD 的可执行文件会被保存到 `~/esp/openocd-esp32/src/openocd` 目录中。

下一步

想要进一步配置调试环境，请前往*配置 ESP32 目标板* 章节。

从下面选择你使用的操作系统，并按照提示进一步设置 OpenOCD。

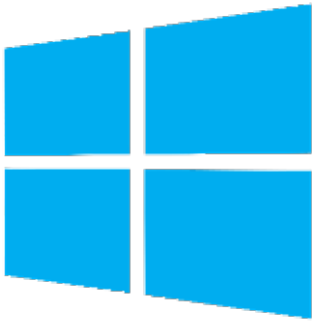		
Windows	Linux	Mac OS

安装完成后，请熟悉一下 `openocd-esp32` 安装路径下的两个关键目录：

- `bin` 目录下包含了 OpenOCD 的可执行文件
- `share\openocd\scripts` 目录下包含了一些配置文件，它们会作为命令行参数与 OpenOCD 一同被调用

注解: 上面的目录名称和结构特定于 OpenOCD 的二进制发行版，它们会被用在本指南中的 OpenOCD 示例中。从源码构建得到的 OpenOCD 存放的目录可能会不一样，所以调用 OpenOCD 的方式也会略有不同。

更多详细信息请参阅*从源码构建 OpenOCD*。

5.12.5 配置 ESP32 目标板

安装好 OpenOCD 之后就可以配置 ESP32 目标（即带 JTAG 接口的 ESP32 板），具体可以通过以下三个步骤进行：

- 配置并连接 JTAG 接口
- 运行 OpenOCD
- 上传待调试的应用程序

配置并连接 JTAG 接口

此步骤取决于您使用的 JTAG 和 ESP32 板，请参考以下两种情况。

配置 WROVER 上的 JTAG 接口

[English]

所有版本的 ESP-WROVER-KIT 板子都内置了 JTAG 调试功能，要使其正常工作，还需要设置相关跳帽来启用 JTAG 功能，设置 SPI 闪存电压和配置 USB 驱动程序。具体步骤请参考以下说明。

配置硬件

1. 根据*ESP-WROVER-KIT V4.1 入门指南* 文档中设置选项 章节所描述的信息，设置 JP8 便可以启用 JTAG 功能。
2. 检查 ESP32 上用于 JTAG 通信的引脚是否被接到了其它硬件上，这可能会影响 JTAG 的工作。

	ESP32 引脚	JTAG 信号
1	CHIP_PU	TRST_N
2	MTDO / GPIO15	TDO
3	MTDI / GPIO12	TDI
4	MTCK / GPIO13	TCK
5	MTMS / GPIO14	TMS

配置 USB 驱动

安装和配置 USB 驱动，这样 OpenOCD 才能够与 ESP-WROVER-KIT 板上的 JTAG 接口通信，并且使用 UART 接口上传待烧写的镜像文件。请根据你的操作系统按照以下步骤进行安装配置。

注解： ESP-WROVER-KIT 使用了 FT2232 芯片实现了 JTAG 适配器，所以以下说明同样适用于其他基于 FT2232 的 JTAG 适配器。

Windows

1. 使用标准 USB A / micro USB B 线将 ESP-WROVER-KIT 与计算机相连接，并打开板子的电源。
2. 等待 Windows 识别出 ESP-WROVER-KIT 并且为其安装驱动。如果驱动没有被自动安装，请前往 官网 下载并手动安装。
3. 从 Zadig 官网 下载 Zadig 工具（Zadig_X.X.exe）并运行。
4. 在 Zadig 工具中，进入 “Options” 菜单中选中 “List All Devices”。
5. 检查设备列表，其中应该包含两条与 ESP-WROVER-KIT 相关的条目：“Dual RS232-HS (Interface 0)” 和 “Dual RS232-HS (Interface 1)”。驱动的名字应该是 “FTDIBUS (vxxxx)” 并且 USB ID 为：0403 6010。

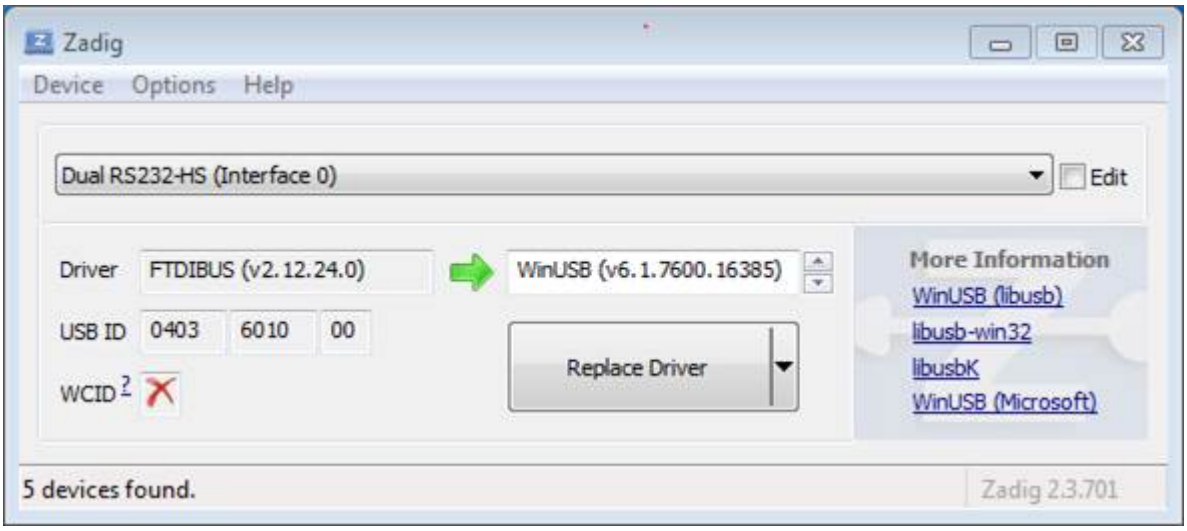

图 6: 在 Zadig 工具中配置 JTAG USB 驱动

6. 第一个设备 “Dual RS232-HS (Interface 0)” 连接到了 ESP32 的 JTAG 端口，此设备原来的 “FTDIBUS (vxxxx)” 驱动需要替换成 “WinUSB (v6xxxxx)”。为此，请选择 “Dual RS232-HS (Interface 0)” 并将驱动重新安装为 “WinUSB (v6xxxxx)”，具体可以参考上图。

注解： 请勿更改第二个设备 “Dual RS232-HS（Interface 1）” 的驱动，它被连接到 ESP32 的串口（UART），用于上传应用程序映像给 ESP32 进行烧写。

现在，ESP-WROVER-KIT 的 JTAG 接口应该可以被 OpenOCD 使用了，想要进一步设置调试环境，请前往*运行 OpenOCD* 章节。

Linux

1. 使用标准 USB A / micro USB B 线将 ESP-WROVER-KIT 与计算机相连接，并打开板子的电源。
2. 打开终端，输入 `ls -l /dev/ttyUSB*` 命令检查操作系统是否能够识别板子的 USB 端口。类似识别结果如下：

```
user-name@computer-name:~/esp$ ls -l /dev/ttyUSB*
crw-rw---- 1 root dialout 188, 0 Jul 10 19:04 /dev/ttyUSB0
crw-rw---- 1 root dialout 188, 1 Jul 10 19:04 /dev/ttyUSB1
```

3. 根据 OpenOCD README 文档 中 “Permissions delegation” 小节的介绍，设置这两个 USB 端口的访问权限。
4. 注销并重新登录 Linux 系统，然后重新插拔板子的电源使之前的改动生效。在终端再次输入 `ls -l /dev/ttyUSB*` 命令进行验证，查看这两个设备的组所有者是否已经从 `dialout` 更改为 `plugdev`:

```
user-name@computer-name:~/esp$ ls -l /dev/ttyUSB*
crw-rw-r-- 1 root plugdev 188, 0 Jul 10 19:07 /dev/ttyUSB0
crw-rw-r-- 1 root plugdev 188, 1 Jul 10 19:07 /dev/ttyUSB1
```

   如果看到类似的输出结果，并且你也是 `plugdev` 组的成员，那么设置工作就完成了。

   具有较低编号的 `/dev/ttyUSBn` 接口用于 JTAG 通信，另一路接口被连接到 ESP32 的串口（UART），用于上传应用程序映像给 ESP32 进行烧写。

现在，ESP-WROVER-KIT 的 JTAG 接口应该可以被 OpenOCD 使用了，想要进一步设置调试环境，请前往*运行 OpenOCD* 章节。

MacOS

在 macOS 上，同时使用 FT2232 的 JTAG 接口和串口还需另外进行其它操作。当操作系统加载 FTDI 串口驱动的时候，它会对 FT2232 芯片的两个通道做相同的操作。但是，这两个通道中只有一个是被用作串口，而另一个用于 JTAG，如果操作系统已经为用于 JTAG 的通道加载了 FTDI 串口驱动的话，OpenOCD 将无法连接到芯片。有两个方法可以解决这个问题：

1. 在启动 OpenOCD 之前手动卸载 FTDI 串口驱动程序，然后启动 OpenOCD，再加载串口驱动程序。
2. 修改 FTDI 驱动程序的配置，使其不会为 FT2232 芯片的通道 B 进行自我加载，该通道用于 ESP-WROVER-KIT 板上的 JTAG 通道。

手动卸载驱动程序

1. 从 FTDI 官网 安装驱动。
2. 使用 USB 线连接 ESP-WROVER-KIT。
3. 卸载串口驱动

```
sudo kextunload -b com.FTDI.driver.FTDIUSBSerialDriver
```

有时，您可能还需要卸载苹果的 FTDI 驱动:

```
sudo kextunload -b com.apple.driver.AppleUSBFTDI
```

4. 运行 OpenOCD（以下路径为 Github 上可供下载的预编译后的 OpenOCD）:

```
bin/openocd -s share/openocd/scripts -f interface/ftdi/esp32_devkitj_v1.cfg -f␣
↪board/esp-wroom-32.cfg
```

如果 OpenOCD 是从源码编译得到的，那么路径需要做相应修改:

```
src/openocd -s tcl -f interface/ftdi/esp32_devkitj_v1.cfg -f board/esp-wroom-32.cfg
```

5. 在另一个终端窗口，再一次加载 FTDI 串口驱动:

```
sudo kextload -b com.FTDI.driver.FTDIUSBSerialDriver
```

注解: 如果您在 Windows 上使用 `ESP-IDF Tools Installer` 安装的 OpenOCD，则无需切换目录即可运行 `openocd -f interface/ftdi/esp32_devkitj_v1.cfg -f board/esp-wroom-32.cfg` ，也无需使用 `-s share/openocd/scripts` 参数指定脚本文件的搜索路径。

注解: 如果你需要重启 OpenOCD，则无需再次卸载 FTDI 驱动程序，只需停止 OpenOCD 并再次启动它。只有在重新连接 ESP-WROVER-KIT 或者切换了电源的情况下才需要再次卸载驱动。

你也可以根据自身需求，将此过程包装进 shell 脚本中。

修改 FTDI 驱动

简而言之，这种方法需要修改 FTDI 驱动程序的配置文件，这样可以防止为 FT2232H 的通道 B 自动加载串口驱动。

注解: 其他板子可能将通道 A 用于 JTAG，因此请谨慎使用此选项。

警告: 此方法还需要操作系统禁止对驱动进行签名验证，因此可能无法被所有的用户所接受。

1. 使用文本编辑器打开 FTDI 驱动的配置文件（注意 sudo）：

```
sudo nano /Library/Extensions/FTDIUSBSerialDriver.kext/Contents/Info.plist
```

2. 找到并删除以下几行:

```
<key>FT2232H_B</key>
<dict>
    <key>CFBundleIdentifier</key>
    <string>com.FTDI.driver.FTDIUSBSerialDriver</string>
    <key>IOClass</key>
    <string>FTDIUSBSerialDriver</string>
    <key>IOProviderClass</key>
    <string>IOUSBInterface</string>
    <key>bConfigurationValue</key>
    <integer>1</integer>
    <key>bInterfaceNumber</key>
    <integer>1</integer>
    <key>bcdDevice</key>
    <integer>1792</integer>
    <key>idProduct</key>
    <integer>24592</integer>
    <key>idVendor</key>
    <integer>1027</integer>
</dict>
```

3. 保存并关闭文件
4. 禁用驱动的签名认证:
    1. 点击苹果的 logo，选择“Restart…”
    2. 重启后当听到响铃时，立即按下键盘上的 CMD+R 组合键
    3. 进入恢复模式后，打开终端
    4. 运行命令:

```
csrutil enable --without kext
```

5. 再一次重启系统

完成这些步骤后，可以同时使用串口和 JTAG 接口了。

想要进一步设置调试环境，请前往运行 *OpenOCD* 章节。

配置其它 JTAG 接口

[English]

关于适配 OpenOCD 和 ESP32 的 JTAG 接口选择问题，请参考选择 *JTAG* 适配器 章节，确保 JTAG 适配器能够与 OpenOCD 和 ESP32 一同工作。然后按照以下三个步骤进行设置，使其正常工作。

配置硬件

1. 找到 JTAG 接口和 ESP32 板上需要相互连接并建立通信的引脚/信号。

	ESP32 引脚	JTAG 信号
1	CHIP_PU	TRST_N
2	MTDO / GPIO15	TDO
3	MTDI / GPIO12	TDI
4	MTCK / GPIO13	TCK
5	MTMS / GPIO14	TMS
6	GND	GND

2. 检查 ESP32 上用于 JTAG 通信的的引脚是否被连接到了其它硬件上，这可能会影响 JTAG 的工作。
3. 连接 ESP32 和 JTAG 接口上的引脚/信号。

配置驱动

你可能还需要安装软件驱动，才能使 JTAG 在计算机上正常工作，请参阅你所使用的 JTAG 适配器的有关文档，获取相关详细信息。

连接

将 JTAG 接口连接到计算机，打开 ESP32 和 JTAG 接口板上的电源，然后检查计算机是否可以识别到 JTAG 接口。

要继续设置调试环境，请前往运行 *OpenOCD* 章节。

运行 OpenOCD

配置完目标并将其连接到电脑后，即可启动 OpenOCD。

打开终端，进入安装目录并启动 OpenOCD:

```
cd ~/esp/openocd-esp32
bin/openocd -s share/openocd/scripts -f interface/ftdi/esp32_devkitj_v1.cfg -f board/esp-
↪wroom-32.cfg
```

注解： 如上所示，`-f` 后面的文件是特定于板载*ESP-WROOM-32* 模组的 ESP-WROVER-KIT 开发板的。您可能需要根据具体使用的硬件而提供不同的配置文件，相关指导请参阅*针对特定目标的 OpenOCD 配置*。

注解： 如果您在 Windows 上使用 `ESP-IDF Tools Installer` 安装的 OpenOCD，则无需切换目录即可运行 `openocd -f interface/ftdi/esp32_devkitj_v1.cfg -f board/esp-wroom-32.cfg` ，也无需使用 `-s share/openocd/scripts` 参数指定脚本文件的搜索路径。

现在应该可以看到类似下面的输出（此日志来自 ESP-WROVER-KIT）：

```
user-name@computer-name:~/esp/openocd-esp32$ bin/openocd -s share/openocd/scripts -f␣
↪interface/ftdi/esp32_devkitj_v1.cfg -f  board/esp-wroom-32.cfg
Open On-Chip Debugger 0.10.0-dev-ged7b1a9 (2017-07-10-07:16)
Licensed under GNU GPL v2
For bug reports, read
        http://openocd.org/doc/doxygen/bugs.html
none separate
adapter speed: 20000 kHz
force hard breakpoints
Info : ftdi: if you experience problems at higher adapter clocks, try the command "ftdi_
↪tdo_sample_edge falling"
Info : clock speed 20000 kHz
Info : JTAG tap: esp32.cpu0 tap/device found: 0x120034e5 (mfg: 0x272 (Tensilica), part:␣
↪0x2003, ver: 0x1)
Info : JTAG tap: esp32.cpu1 tap/device found: 0x120034e5 (mfg: 0x272 (Tensilica), part:␣
↪0x2003, ver: 0x1)
Info : esp32: Debug controller was reset (pwrstat=0x5F, after clear 0x0F).
Info : esp32: Core was reset (pwrstat=0x5F, after clear 0x0F).
```

- 如果出现指示权限问题的错误，请参阅 `~/esp/openocd-esp32` 目录下 OpenOCD README 文件中关于 “Permissions delegation” 的说明。

- 如果发现配置文件有错误，例如 `Can't find interface/ftdi/esp32_devkitj_v1.cfg`，请检查 `-s` 后面的路径，OpenOCD 会根据此路径来查找 `-f` 指定的文件。此外，还需要检查配置文件是否确实位于该路径下。
- 如果看到 JTAG 错误（输出全是 1 或者全是 0），请检查硬件连接，除了 ESP32 的引脚之外是否还有其他信号连接到了 JTAG，并查看是否所有器件都已经上电。

上传待调试的应用程序

您可以像往常一样构建并上传 ESP32 应用程序，具体请参阅*编译和烧写* 章节。

除此以外，还支持使用 OpenOCD 通过 JTAG 接口将应用程序镜像烧写到闪存中，命令如下:

```
cd ~/esp/openocd-esp32
bin/openocd -s share/openocd/scripts -f interface/ftdi/esp32_devkitj_v1.cfg -f board/esp-
↪wroom-32.cfg -c "program_esp32  filename.bin 0x10000 verify exit"
```

注解: 如果您在 Windows 上使用 `ESP-IDF Tools Installer` 安装的 OpenOCD，则无需切换目录即可运行 `openocd -f interface/ftdi/esp32_devkitj_v1.cfg -f board/esp-wroom-32.cfg` ，也无需使用 `-s share/openocd/scripts` 参数指定脚本文件的搜索路径。

其中 OpenOCD 的烧写命令 `program_esp32` 具有以下格式:

`program_esp32 <image_file> <offset> [verify] [reset] [exit]`

- `image_file` - 程序镜像文件存放的路径
- `offset` - 镜像烧写到闪存中的偏移地址
- `verify` - 烧写完成后校验闪存中的内容（可选）
- `reset` - 烧写完成后重启目标（可选）
- `exit` - 烧写完成后退出 OpenOCD（可选）

现在可以进行应用程序的调试了，请按照以下章节中讲解的步骤进行操作。

5.12.6 启动调试器

ESP32 的工具链中带有 GNU 调试器（简称 GDB）`xtensa-esp32-elf-gdb`，它和其它工具链软件存放在同一个 bin 目录下。除了直接在命令行终端中调用并操作 GDB 外，还可以在 IDE (例如 Eclipse, Visual Studio Code 等）中调用它，在图形用户界面的帮助下间接操作 GDB，无需在终端中输入任何命令。

关于以上两种调试器的使用方法，详见以下链接。

- *在 Eclipse 中使用 GDB*
- *在命令行中使用 GDB*

建议首先检查调试器是否能在命令行终端 下正常工作，然后再转到使用 Eclipse 等集成开发环境 下进行调试工作。

5.12.7 调试范例

本节适用于不熟悉 GDB 的用户，将使用 get-started/blink 下简单的应用程序来演示调试会话的工作流程，同时会介绍以下常用的调试操作：

1. 浏览代码，查看堆栈和线程
2. 设置和清除断点
3. 手动暂停目标
4. 单步执行代码
5. 查看并设置内存
6. 观察和设置程序变量
7. 设置条件断点

此外还会提供在命令行终端进行调试 的案例。

在演示之前，请设置好 ESP32 目标板并加载 get-started/blink 至 ESP32 中。

5.12.8 从源码构建 OpenOCD

请参阅以下文档，它们分别介绍了在各大操作系统平台上从源码构建 OpenOCD 的流程。

注解： 本文档演示所使用的 OpenOCD 是安装 *OpenOCD* 章节中介绍的预编译好的二进制发行版，如果要使用本地从源代码构建得到的 OpenOCD 程序，需要将相应可执行文件的路径修改为 `src/openocd`，并将配置文件的路径修改为 `-s tcl`。

具体使用示例如下：

```
src/openocd -s tcl -f interface/ftdi/esp32_devkitj_v1.cfg -f board/esp-wroom-32.cfg
```

5.12.9 注意事项和补充内容

本节列出了本指南中提到的所有注意事项和补充内容的链接。

- 可用的断点和观察点
- 关于断点的补充知识
- 闪存映射 *vs* 软件闪存断点

- *“next”命令无法跳过子程序的原因*
- *OpenOCD 支持的编译时的选项*
- *支持 FreeRTOS*
- *在 OpenOCD 的配置文件中设置 SPI 闪存的工作电压*
- *优化 JTAG 的速度*
- *调试器的启动命令的含义*
- *针对特定目标的 OpenOCD 配置*
- *复位 ESP32*
- *不要将 JTAG 引脚用于其他功能*
- *报告 OpenOCD / GDB 的问题*

5.12.10 相关文档

使用调试器

[English]

本节会在*Eclipse* 和*命令行* 中分别介绍配置和运行调试器的方法。我们建议你首先通过*命令行* 检查调试器是否正常工作，然后再转到使用*Eclipse* 平台。

在 Eclipse 中使用 GDB

标准的 Eclipse 安装流程默认安装调试功能，另外我们还可以使用插件来调试，比如“GDB Hardware Debugging”。这个插件用起来非常方便，本指南会详细介绍该插件的使用方法。

首先，通过打开 Eclipse 并转到“Help”> “Install New Software”来安装“GDB Hardware Debugging”插件。

安装完成后，按照以下步骤配置调试会话。请注意，一些配置参数是通用的，有些则针对特定项目。我们会通过配置“blink”示例项目的调试环境来进行展示，请先按照*使用 Eclipse IDE 编译和烧写* 文章介绍的方法将该示例项目添加到 Eclipse 的工作空间。示例项目 get-started/blink 的源代码可以在 ESP-IDF 仓库的 examples 目录下找到。

1. 在 Eclipse 中，进入 *Run* > *Debug Configuration*，会出现一个新的窗口。在窗口的左侧窗格中，双击“GDB Hardware Debugging”（或者选择“GDB Hardware Debugging”然后按下“New”按钮）来新建一个配置。
2. 在右边显示的表单中，“Name:”一栏中输入配置的名称，例如：“Blink checking”。
3. 在下面的“Main”选项卡中，点击“Project:”边上的“Browse”按钮，然后选择当前的“blink”项目。

4. 在下一行的 “C/C++ Application:” 中，点击 “Browse” 按钮，选择 “blink.elf” 文件。如果 “blink.elf” 文件不存在，那么很有可能该项目还没有编译，请参考使用 *Eclipse IDE* 编辑和烧写 指南中的介绍。

5. 最后，在 “Build (if required) before launching” 下面点击 “Disable auto build”。

   上述步骤 1 - 5 的示例输入如下图所示。

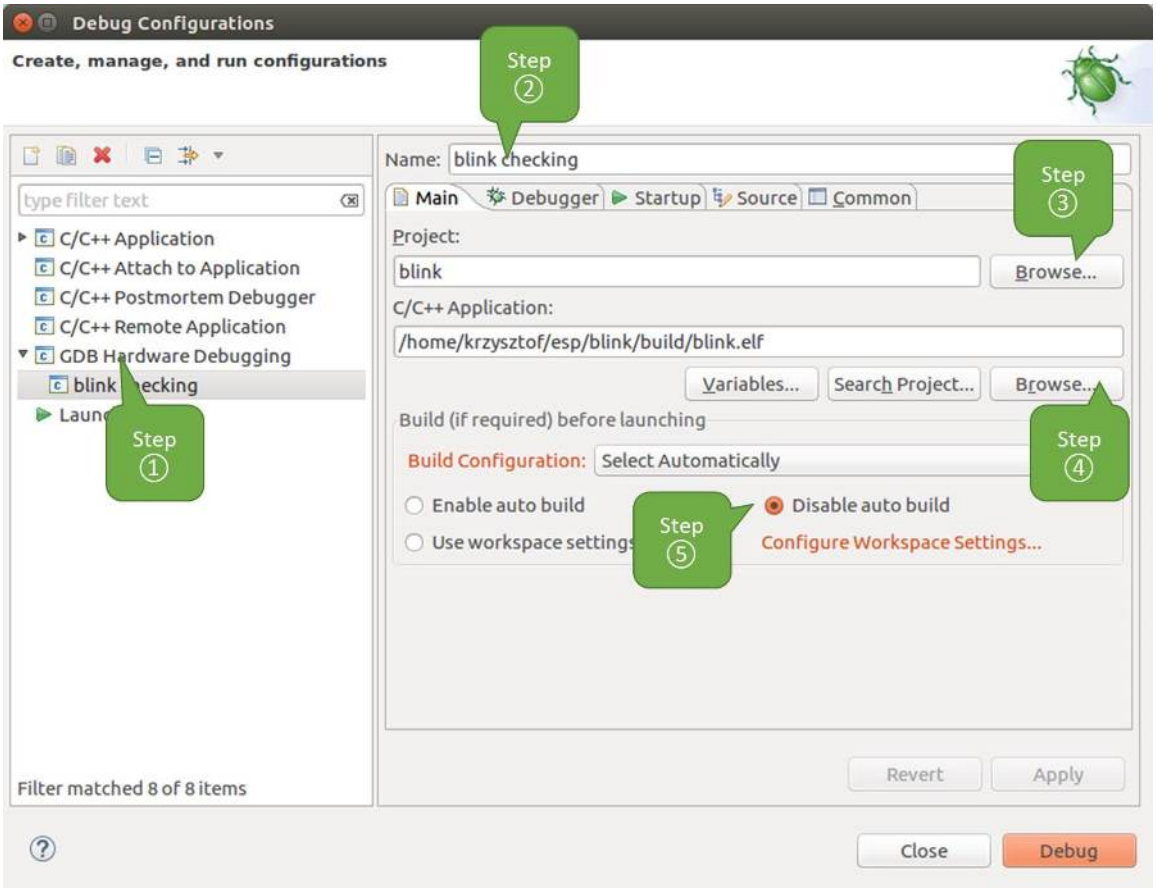

图 7: GDB 硬件调试的配置 - Main 选项卡

6. 点击 “Debugger” 选项卡，在 “GDB Command” 栏中输入 `xtensa-esp32-elf-gdb` 来调用调试器。

7. 更改 “Remote host” 的默认配置，在 “Port number” 下面输入 `3333`。

   上述步骤 6 - 7 的示例输入如下图所示。

8. 最后一个需要更改默认配置的选项卡是 “Startup” 选项卡。在 “Initialization Commands” 下，取消选中 “Reset and Delay (seconds)” 和 “Halt”，然后在下面一栏中输入以下命令：

```
mon reset halt
flushregs
set remote hardware-watchpoint-limit 2
```

注解： 如果你想在启动新的调试会话之前自动更新闪存中的镜像，请在 “Initialization Commands” 文

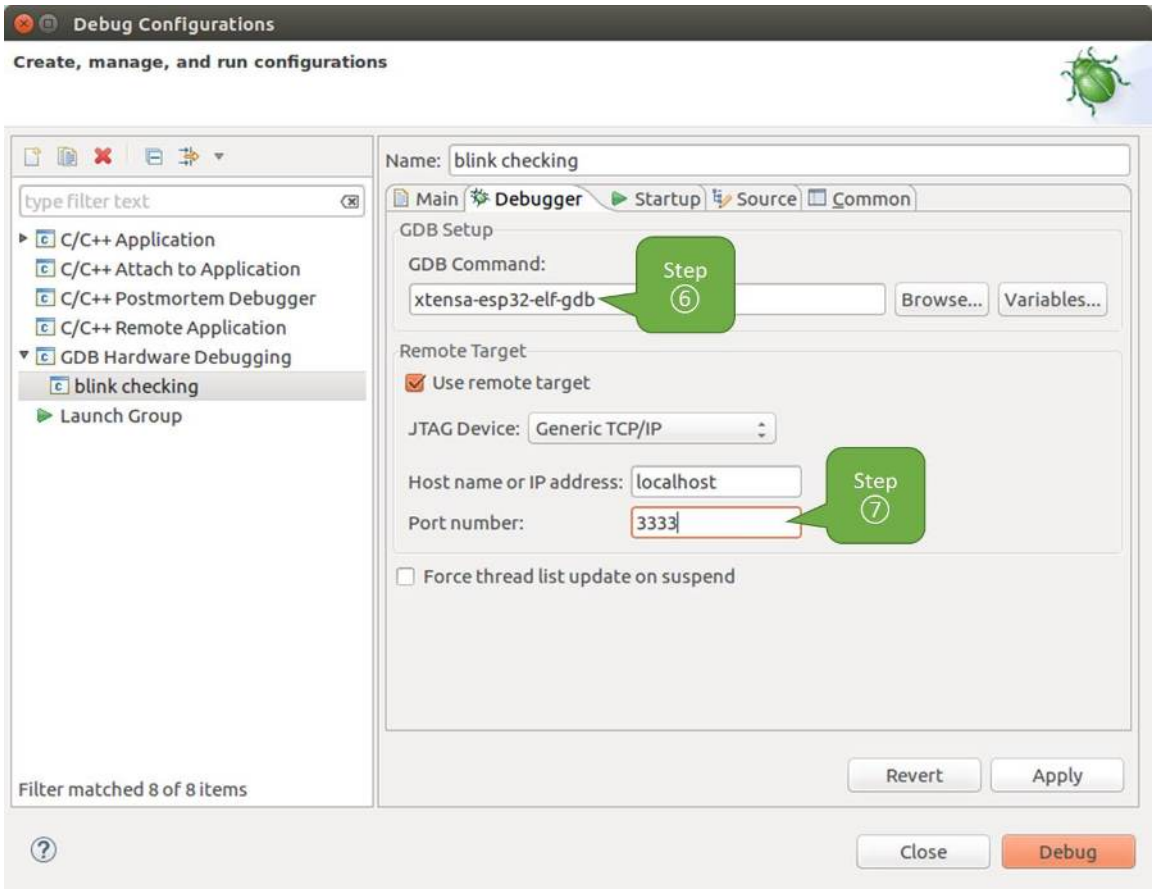

图 8: GDB 硬件调试的配置 - Debugger 选项卡

本框的开头添加以下命令行:

```
mon reset halt
mon program_esp32 ${workspace_loc:blink/build/blink.bin} 0x10000 verify
```

有关 `program_esp32` 命令的说明请参考上传待调试的应用程序 章节。

9. 在 “Load Image and Symbols” 下，取消选中 “Load image” 选项。
10. 在同一个选项卡中继续往下浏览，建立一个初始断点用来在调试器复位后暂停 CPU。插件会根据 “Set break point at:” 一栏中输入的函数名，在该函数的开头设置断点。选中这一选项，并在相应的字段中输入 `app_main`。
11. 选中 “Resume” 选项，这会使得程序在每次调用步骤 8 中的 `mon reset halt` 之后恢复，然后在 `app_main` 的断点处停止。

    上述步骤 8 - 11 的示例输入如下图所示。

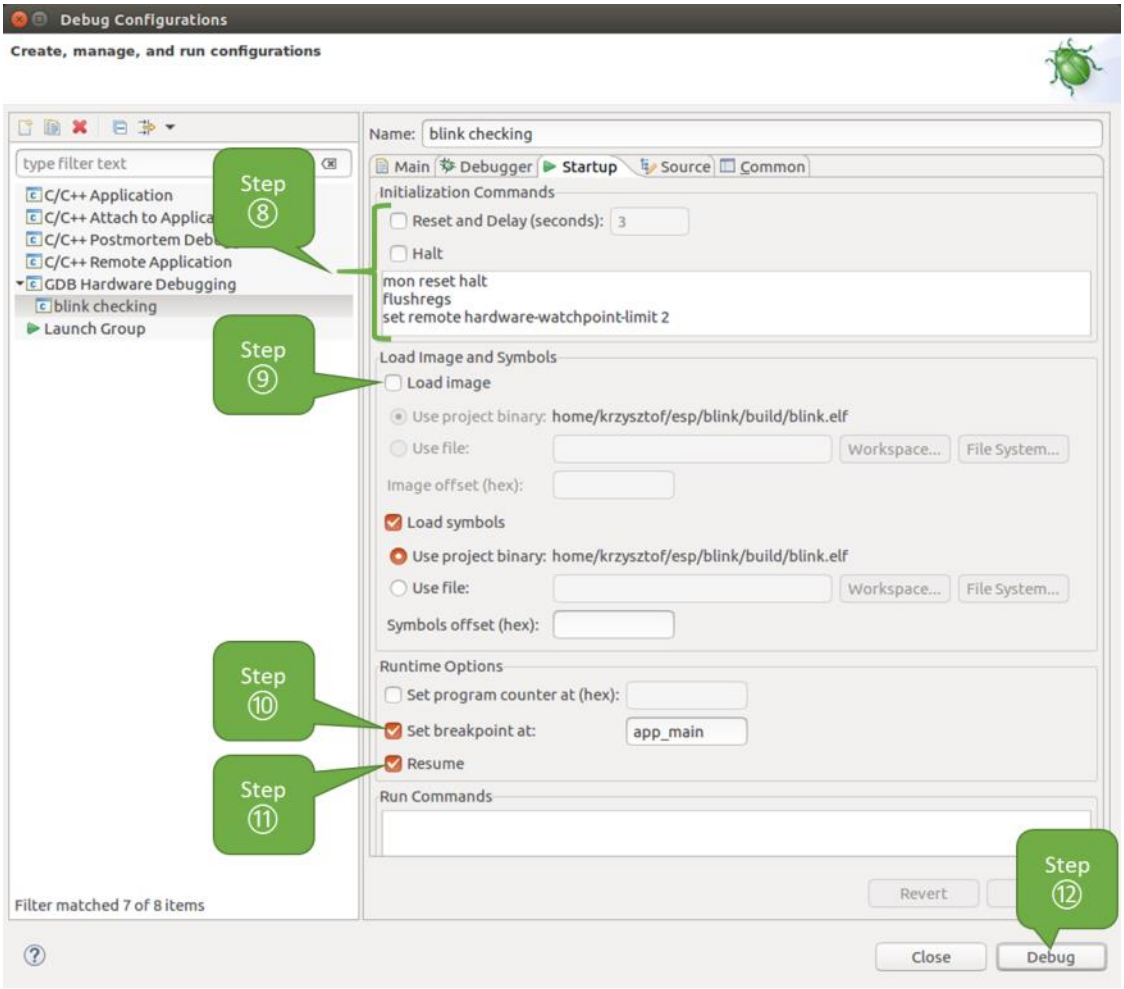

图 9: GDB 硬件调试的配置 - Startup 选项卡

上面的启动序列看起来有些复杂，如果你对其中的初始化命令不太熟悉，请查阅调试器的启动命令的含义 章节获取更多说明。

12. 如果你前面已经完成配置 *ESP32* 目标板 中介绍的步骤，那么目标正在运行并准备与调试器进行对话。按下 “Debug” 按钮就可以直接调试。否则请按下 “Apply” 按钮保存配置，返回配置 *ESP32* 目标板 章节进行配置，最后再回到这里开始调试。

一旦所有 1 - 12 的配置步骤都已经完成，Eclipse 就会打开 “Debug” 视图，如下图所示。

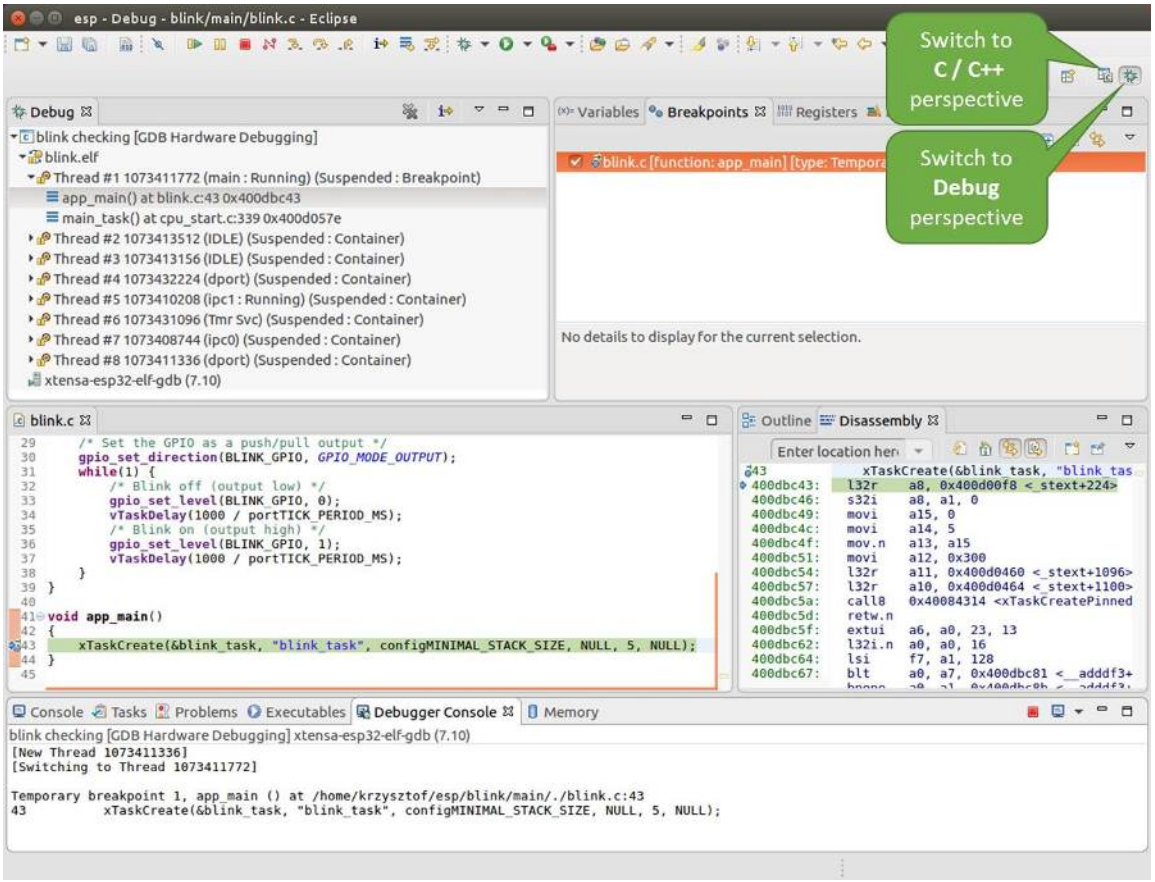

图 10: Eclipse 中的调试视图

如果你不太了解 GDB 的常用方法，请查阅使用 *Eclipse* 的调试示例 文章中的调试示例章节调试范例。

在命令行中使用 GDB

1. 为了能够启动调试会话，需要先启动并运行目标，如果还没有完成，请按照配置 *ESP32* 目标板 中的介绍进行操作。

2. 打开一个新的终端会话并前往待调试的项目目录，比如：

```
cd ~/esp/blink
```

3. 当启动调试器时，通常需要提供几个配置参数和命令，为了避免每次都在命令行中逐行输入这些命令，我们可以新建一个配置文件，并将其命名为 gdbinit:

```
target remote :3333
set remote hardware-watchpoint-limit 2
mon reset halt
flushregs
thb app_main
c
```

将此文件保存在当前目录中。

有关 gdbinit 文件内部的更多详细信息，请参阅调试器的启动命令的含义 章节。

4. 准备好启动 GDB，请在终端中输入以下内容:

```
xtensa-esp32-elf-gdb -x gdbinit build/blink.elf
```

5. 如果前面的步骤已经正确完成，你会看到如下所示的输出日志，在日志的最后会出现 (gdb) 提示符:

```
user-name@computer-name:~/esp/blink$ xtensa-esp32-elf-gdb -x gdbinit build/blink.elf
GNU gdb (crosstool-NG crosstool-ng-1.22.0-61-gab8375a) 7.10
Copyright (C) 2015 Free Software Foundation, Inc.
License GPLv3+: GNU GPL version 3 or later <http://gnu.org/licenses/gpl.html>
This is free software: you are free to change and redistribute it.
There is NO WARRANTY, to the extent permitted by law.  Type "show copying"
and "show warranty" for details.
This GDB was configured as "--host=x86_64-build_pc-linux-gnu --target=xtensa-esp32-
↪elf".
Type "show configuration" for configuration details.
For bug reporting instructions, please see:
<http://www.gnu.org/software/gdb/bugs/>.
Find the GDB manual and other documentation resources online at:
<http://www.gnu.org/software/gdb/documentation/>.
For help, type "help".
Type "apropos word" to search for commands related to "word"...
Reading symbols from build/blink.elf...done.
0x400d10d8 in esp_vApplicationIdleHook () at /home/user-name/esp/esp-idf/components/
↪esp32/./freertos_hooks.c:52
52          asm("waiti 0");
JTAG tap: esp32.cpu0 tap/device found: 0x120034e5 (mfg: 0x272 (Tensilica), part:␣
↪0x2003, ver: 0x1)
JTAG tap: esp32.slave tap/device found: 0x120034e5 (mfg: 0x272 (Tensilica), part:␣
↪0x2003, ver: 0x1)
```

(下页继续)

(续上页)

```
esp32: Debug controller was reset (pwrstat=0x5F, after clear 0x0F).
esp32: Core was reset (pwrstat=0x5F, after clear 0x0F).
Target halted. PRO_CPU: PC=0x5000004B (active)    APP_CPU: PC=0x00000000
esp32: target state: halted
esp32: Core was reset (pwrstat=0x1F, after clear 0x0F).
Target halted. PRO_CPU: PC=0x40000400 (active)    APP_CPU: PC=0x40000400
esp32: target state: halted
Hardware assisted breakpoint 1 at 0x400db717: file /home/user-name/esp/blink/main/./
↪blink.c, line 43.
0x0:    0x00000000
Target halted. PRO_CPU: PC=0x400DB717 (active)    APP_CPU: PC=0x400D10D8
[New Thread 1073428656]
[New Thread 1073413708]
[New Thread 1073431316]
[New Thread 1073410672]
[New Thread 1073408876]
[New Thread 1073432196]
[New Thread 1073411552]
[Switching to Thread 1073411996]

Temporary breakpoint 1, app_main () at /home/user-name/esp/blink/main/./blink.c:43
43      xTaskCreate(&blink_task, "blink_task", 512, NULL, 5, NULL);
(gdb)
```

注意上面日志的倒数第三行显示了调试器已经在 `app_main()` 函数的断点处停止，该断点在 `gdbinit` 文件中设定。由于处理器已经暂停运行，LED 也不会闪烁。如果这也是你看到的现象，你可以开始调试了。

如果你不太了解 GDB 的常用方法，请查阅使用命令行的调试示例 文章中的调试示例章节调试范例。

调试示例

[English]

本节将介绍如何在*Eclipse* 和命令行 中使用 GDB 进行调试的示例。

使用 Eclipse 的调试示例

请检查目标板是否已经准备好，并加载了 get-started/blink 示例代码，然后按照*在 Eclipse 中使用 GDB* 中介绍的步骤配置和启动调试器，最后选择让应用程序在 `app_main()` 建立的断点处停止。

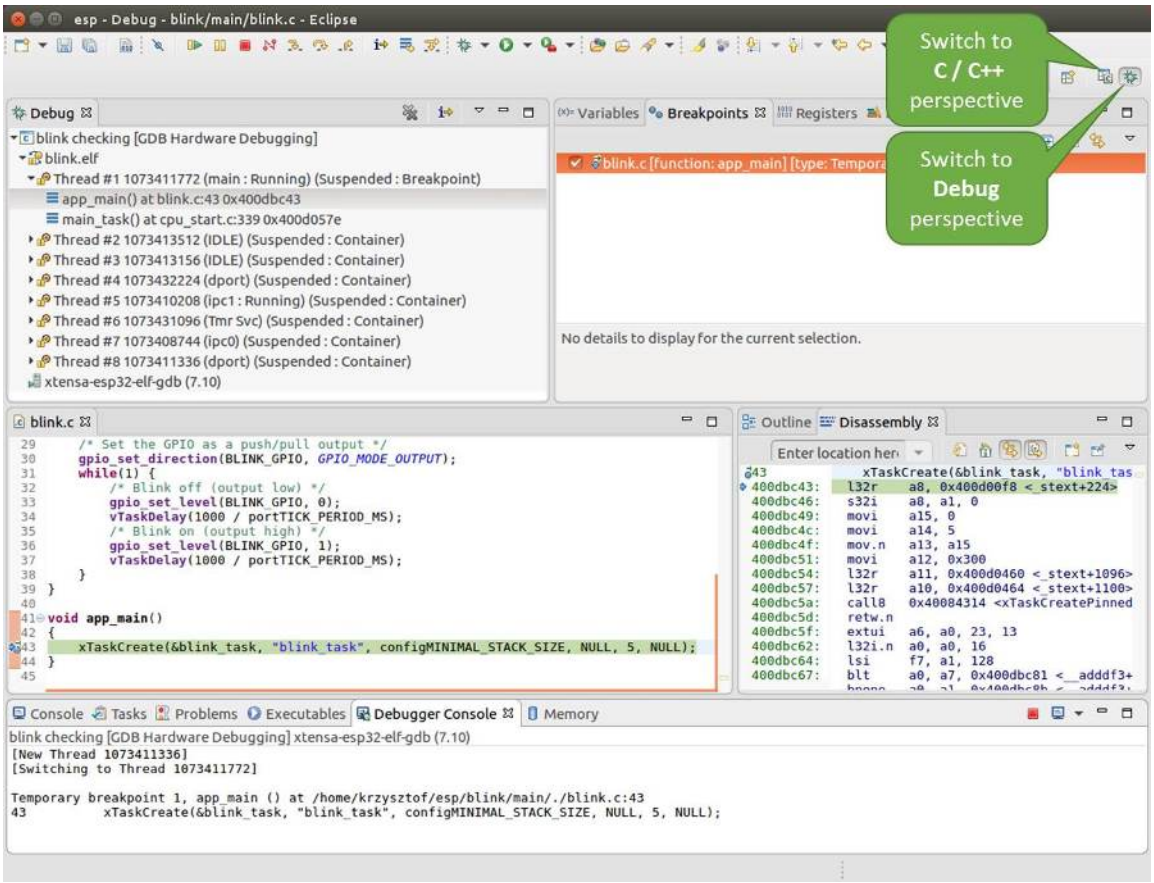

图 11: Eclipse 中的 Debug 视图

本小节的示例

1. 浏览代码，查看堆栈和线程
2. 设置和清除断点
3. 手动暂停目标
4. 单步执行代码
5. 查看并设置内存
6. 观察和设置程序变量
7. 设置条件断点

浏览代码，查看堆栈和线程

当目标暂停时，调试器会在“Debug”窗口中显示线程的列表，程序暂停的代码行在下面的另一个窗口中被高亮显示，如下图所示。此时板子上的 LED 停止了闪烁。

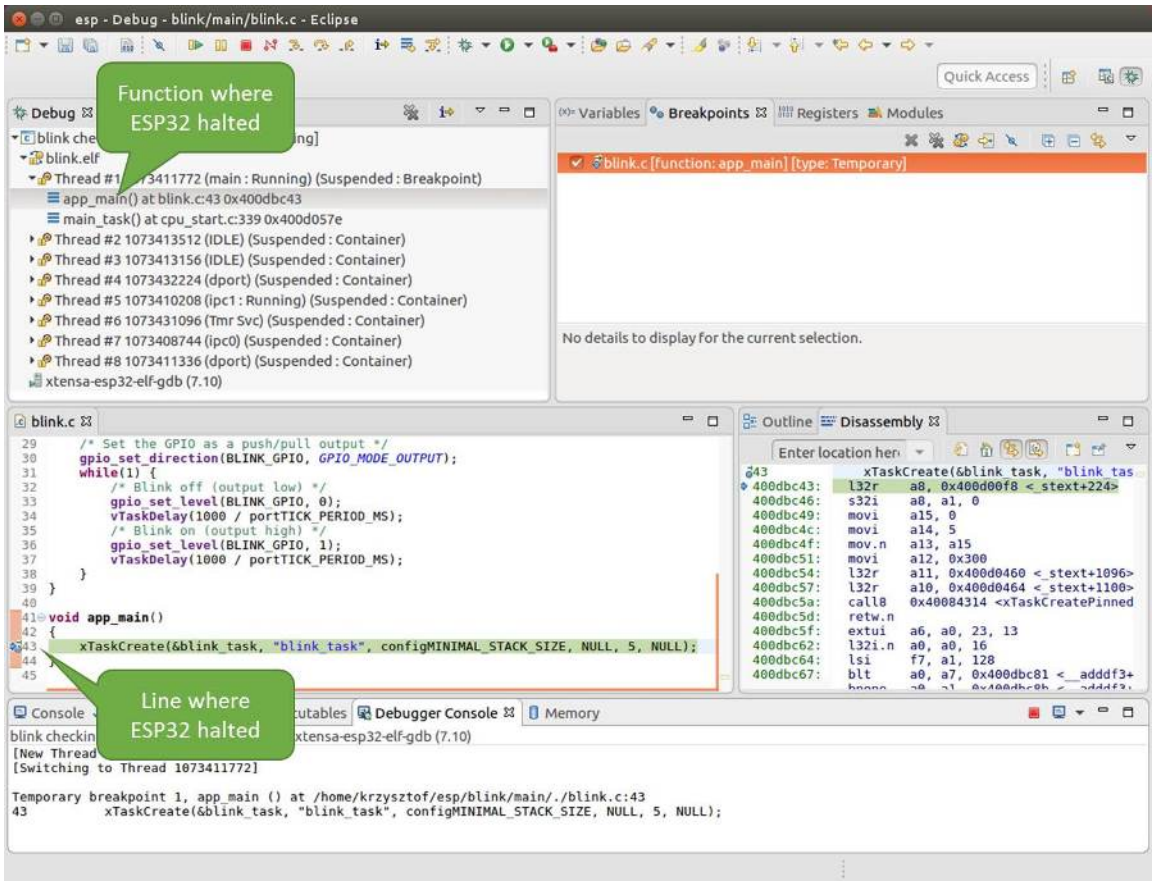

图 12: 调试时目标停止

暂停的程序所在线程也会被展开，显示函数调用的堆栈，它表示直到目标暂停所在代码行（下图高亮处）为止的相关函数的调用关系。1 号线程下函数调用堆栈的第一行包含了最后一个调用的函数 `app_main()`，根据下一行显示，它又是在函数 `main_task()` 中被调用的。堆栈的每一行还包含调用函数的文件名和行号。通过单击每个堆栈的条目，在下面的窗口中，你将看到此文件的内容。

通过展开线程，你可以浏览整个应用程序。展开 5 号线程，它包含了更长的函数调用堆栈，你可以看到函数调用旁边的数字，比如 `0x4000000c`，它们代表未以源码形式提供的二进制代码所在的内存地址。

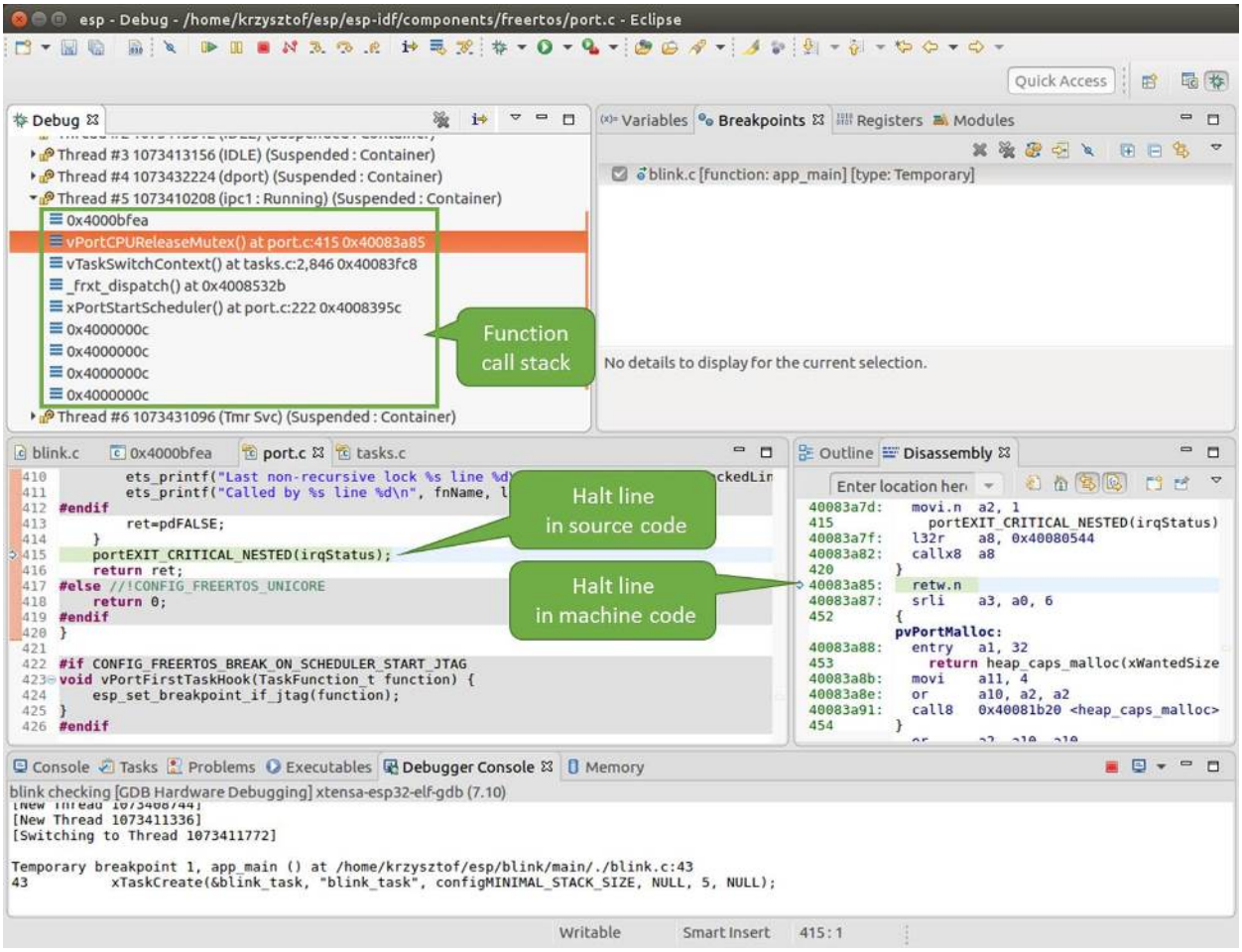

图 13: 浏览函数调用堆栈

无论项目是以源代码还是仅以二进制形式提供，在右边一个窗口中，都可以看到反汇编后的机器代码。

回到 1 号线程中的 `app_main()` 函数所在的 `blink.c` 源码文件，下面的示例将会以该文件为例介绍调试的常用功能。调试器可以轻松浏览整个应用程序的代码，这给单步调试代码和设置断点带来了很大的便利，下面将一一展开讨论。

设置和清除断点

在调试时，我们希望能够在关键的代码行停止应用程序，然后检查特定的变量、内存、寄存器和外设的状态。为此我们需要使用断点，以便在特定某行代码处快速访问和停止应用程序。

我们在控制 LED 状态发生变化的两处代码行分别设置一个断点。基于以上代码列表，这两处分别为第 33 和 36 代码行。按住键盘上的“Control”键，双击 blink.c 文件中的行号 33，并在弹出的对话框中点击“OK”按钮进行确定。如果你不想看到此对话框，双击行号即可。执行同样操作，在第 36 行设置另外一个断点。

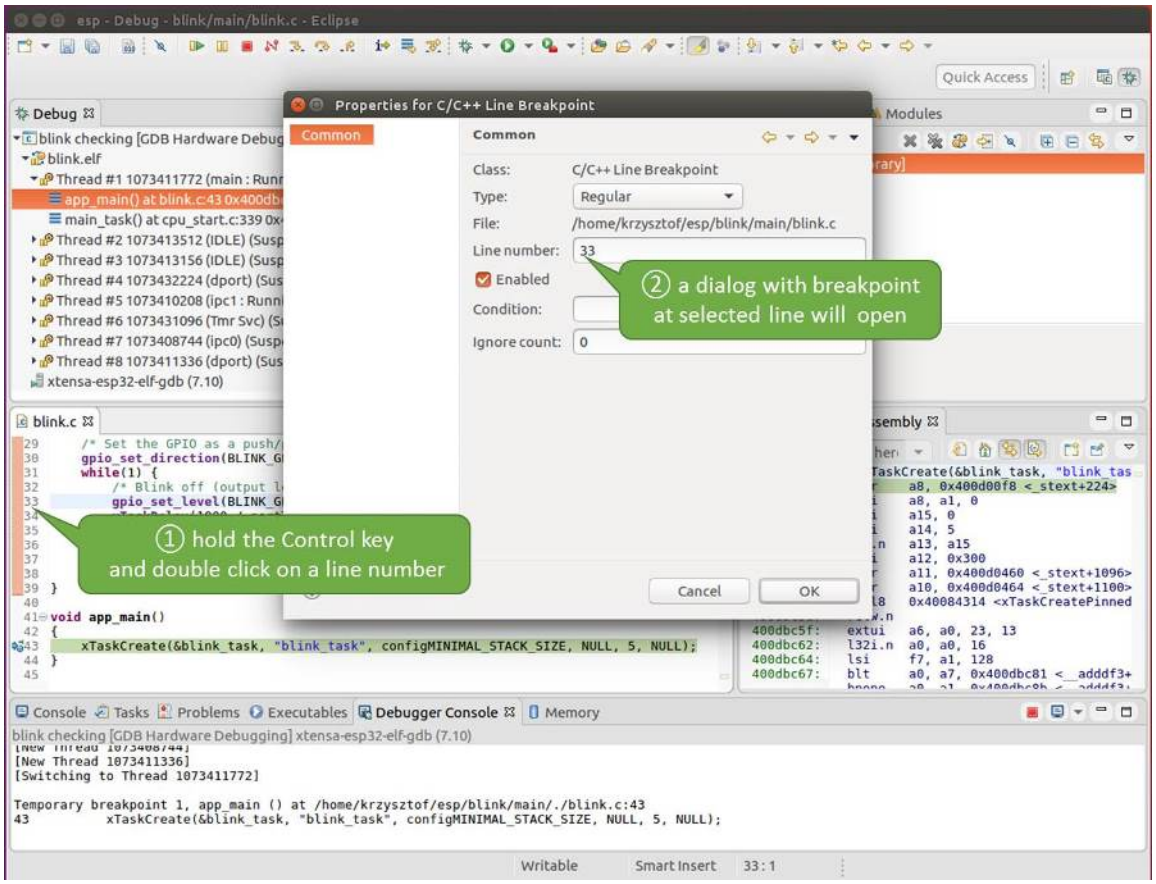

图 14: 设置断点

断点的数量和位置信息会显示在右上角的“断点”窗口中。单击“Show Breakpoints Supported by Selected Target”图标可以刷新此列表。除了刚才设置的两个断点外，列表中可能还包含在调试器启动时设置在 `app_main()` 函数处的临时断点。由于最多只允许设置两个断点（详细信息请参阅可用的断点和观察点），你需要将其删除，否则调试会失败。

单击“Resume”（如果“Resume”按钮是灰色的，请先单击 8 号线程的 `blink_task()` 函数）后处理器将开始继续运行，并在断点处停止。再一次单击“Resume”按钮，使程序再次运行，然后停在第二个断点处，依次类推。

每次单击“Resume”按钮恢复程序运行后，都会看到 LED 切换状态。

更多关于断点的信息，请参阅可用的断点和观察点 和关于断点的补充知识。

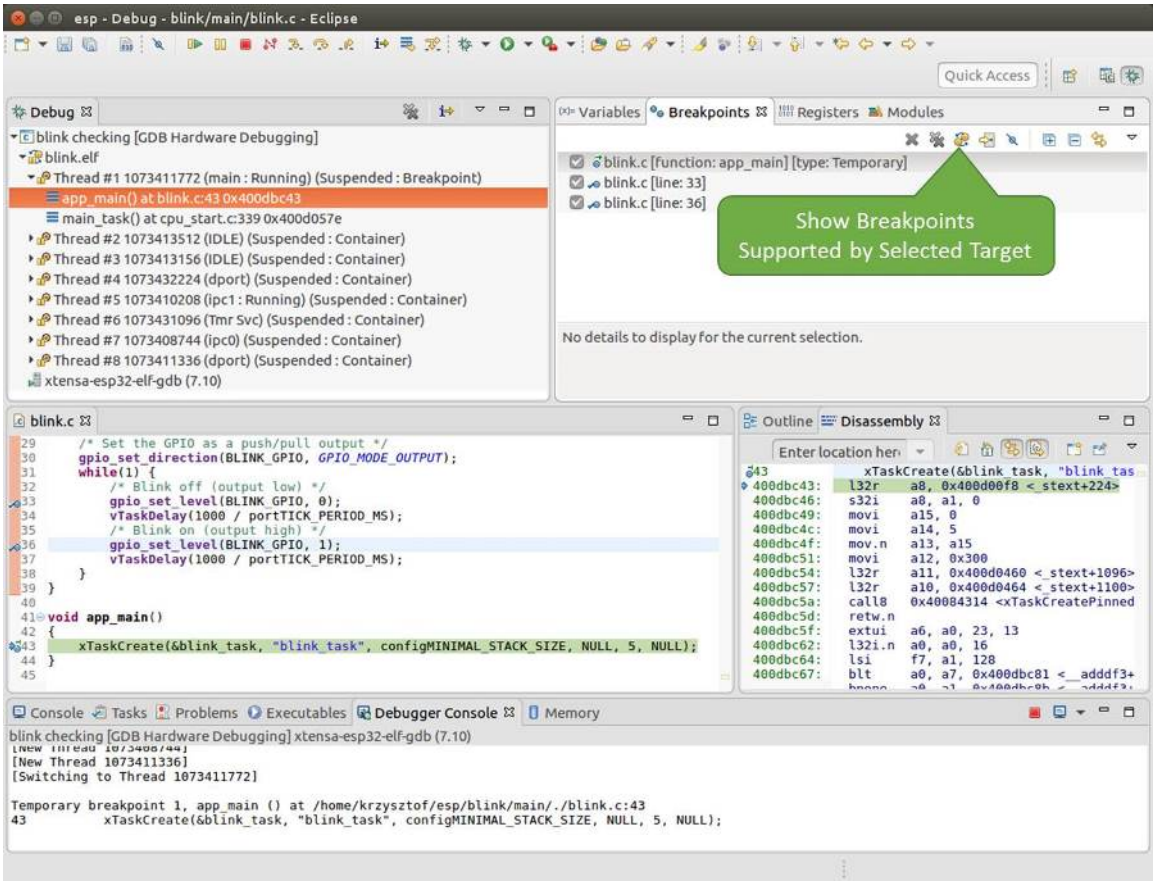

图 15: 设置了三个断点 / 最多允许两个断点

手动暂停目标

在调试时，你可以恢复程序运行并输入代码等待某个事件发生或者保持无限循环而不设置任何断点。后者，如果想要返回调试模式，可以通过单击“Suspend”按钮来手动中断程序的运行。

在此之前，请删除所有的断点，然后单击“Resume”按钮。接着单击“Suspend”按钮，应用程序会停止在某个随机的位置，此时 LED 也将停止闪烁。调试器将展开线程并高亮显示停止的代码行。

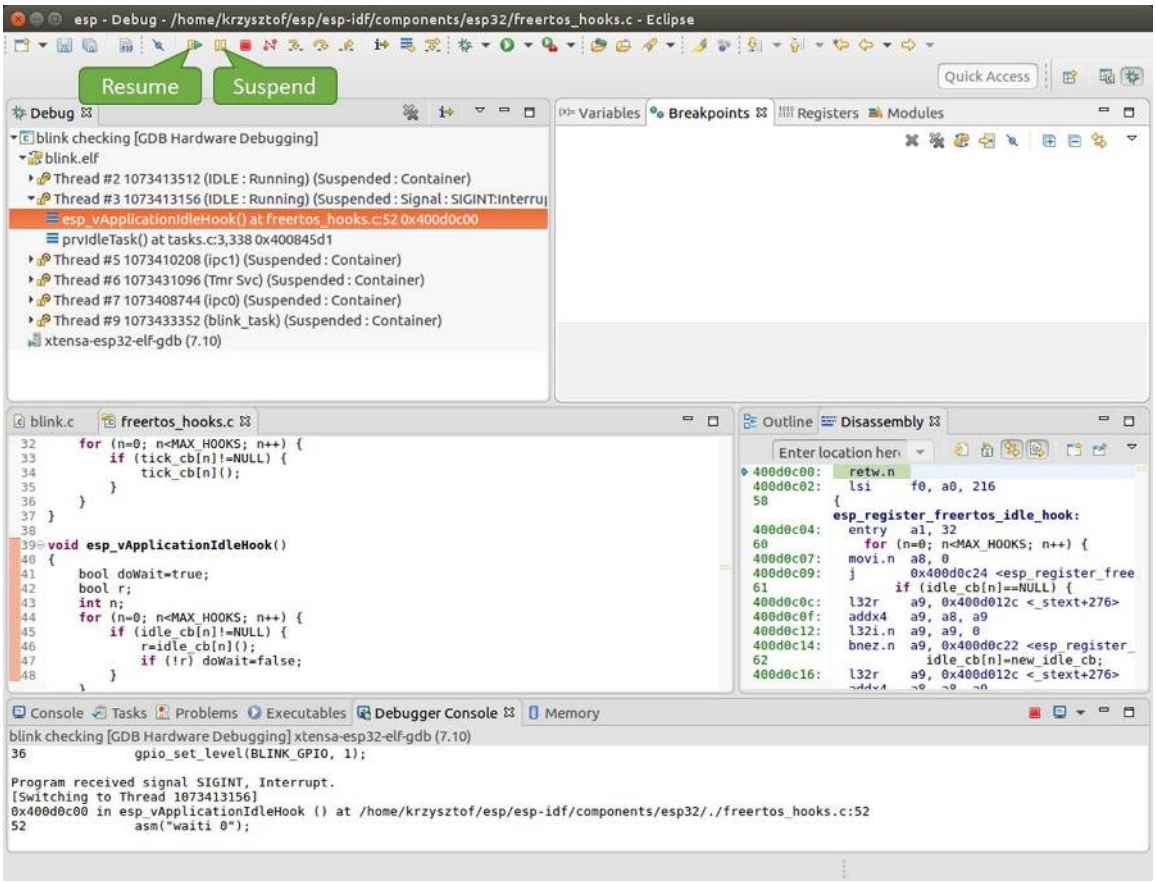

图 16: 手动暂停目标

在上图所示的情况中，应用程序已经在 `freertos_hooks.c` 文件的第 52 行暂停运行，现在你可以通过单击“Resume”按钮再次将其恢复运行或者进行下面要介绍的调试工作。

单步执行代码

我们还可以使用“Step Into (F5)”和“Step Over (F6)”命令单步执行代码，这两者之间的区别是执行“Step Into (F5)”命令会进入调用的子程序，而执行“Step Over (F6)”命令则会直接将子程序看成单个源码行，单步就能将其运行结束。

在继续演示此功能之前，请参照上文所述确保目前只在 `blink.c` 文件的第 36 行设置了一个断点。

按下 F8 键让程序继续运行然后在断点处停止运行，多次按下 “Step Over (F6)” 按钮，观察调试器是如何单步执行一行代码的。

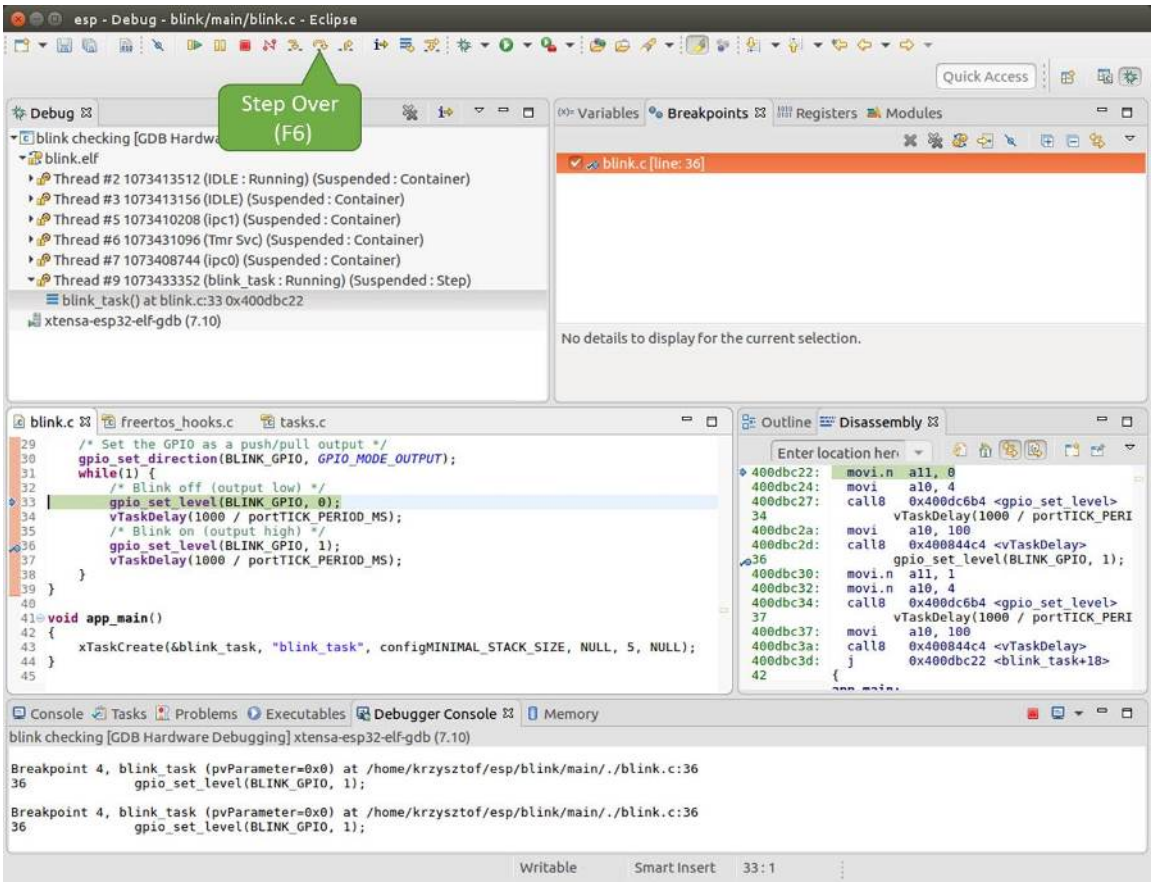

图 17: 使用 “Step Over (F6)” 单步执行代码

如果你改用 “Step Into (F5)”，那么调试器将会进入调用的子程序内部。

在上述例子中，调试器进入 `gpio_set_level(BLINK_GPIO, 0)` 代码内部，同时代码窗口快速切换到 `gpio.c` 驱动文件。

请参阅 *“next” 命令无法跳过子程序的原因* 文档以了解 `next` 命令的潜在局限。

查看并设置内存

要显示或者设置内存的内容，请使用 “调试” 视图中位于底部的 “Memory” 选项卡。

在 “Memory” 选项卡下，我们将在内存地址 `0x3FF44004` 处读取和写入内容。该地址也是 `GPIO_OUT_REG` 寄存器的地址，可以用来控制（设置或者清除）某个 GPIO 的电平。关于该寄存器的更多详细信息，请参阅 ESP32 技术参考手册 中的 IO_MUX 和 GPIO Matrix 章节。

同样在 `blink.c` 项目文件中，在两个 `gpio_set_level` 语句的后面各设置一个断点，单击 “Memory” 选项卡，然后单击 “Add Memory Monitor” 按钮，在弹出的对话框中输入 `0x3FF44004`。

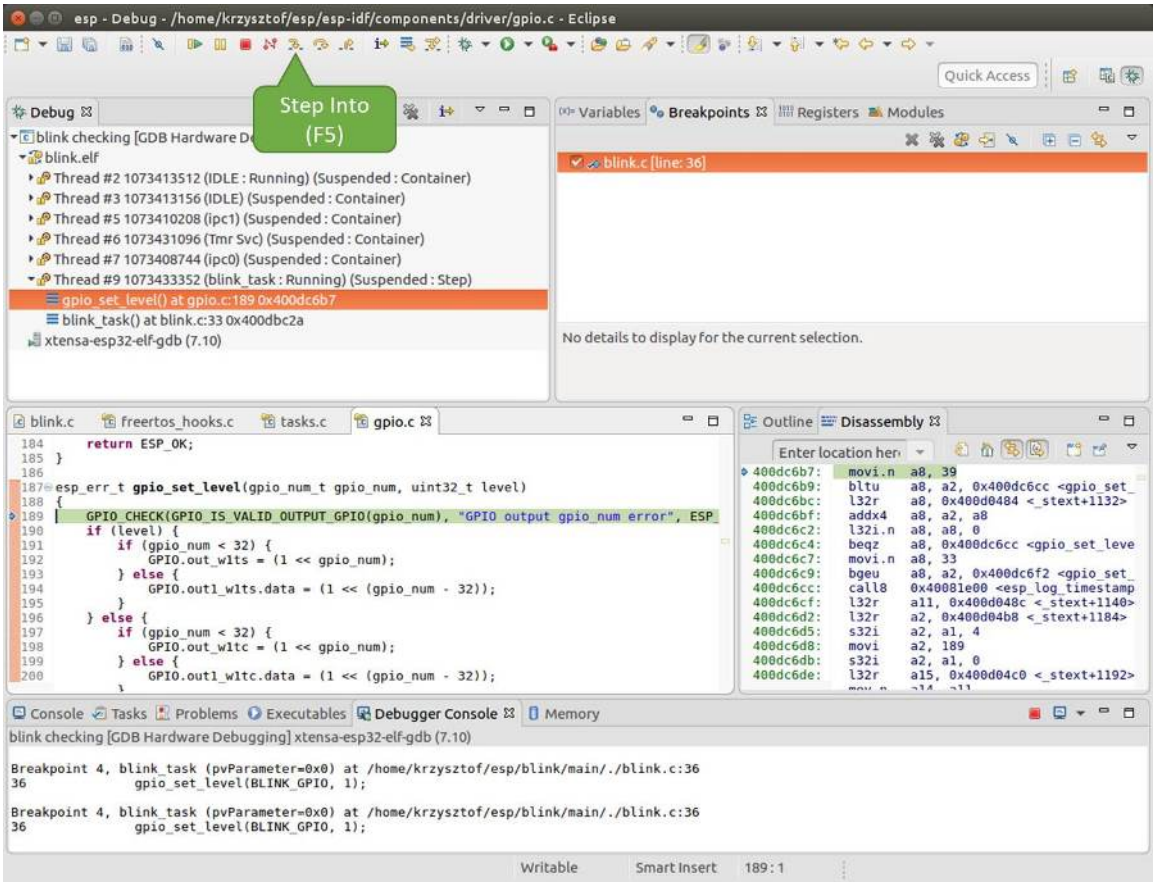

图 18: 使用“Step Into (F5)”单步执行代码

按下 F8 按键恢复程序运行，并观察“Monitor”选项卡。

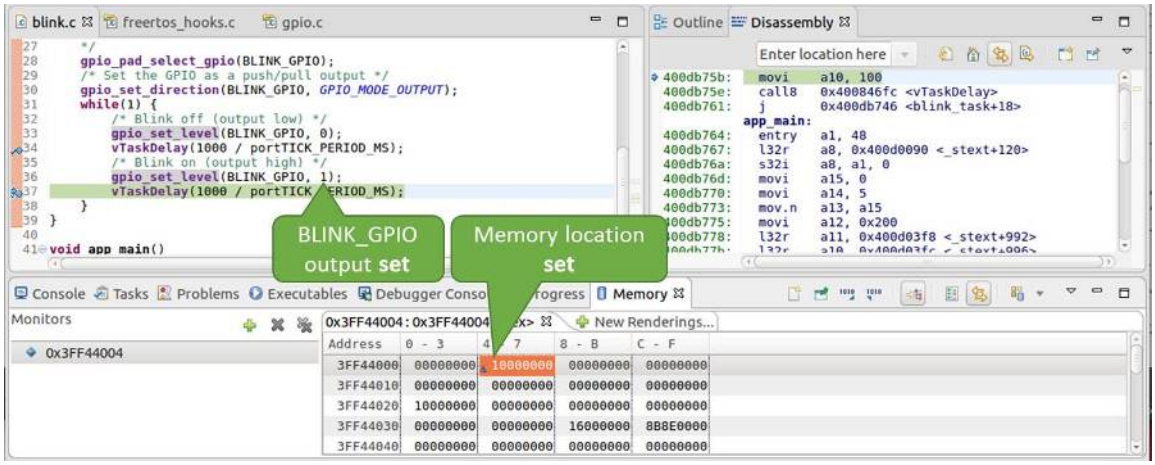

图 19: 观察内存地址 0x3FF44004 处的某个比特被置高

每按一下 F8，你就会看到在内存 `0x3FF44004` 地址处的一个比特位被翻转（并且 LED 会改变状态）。

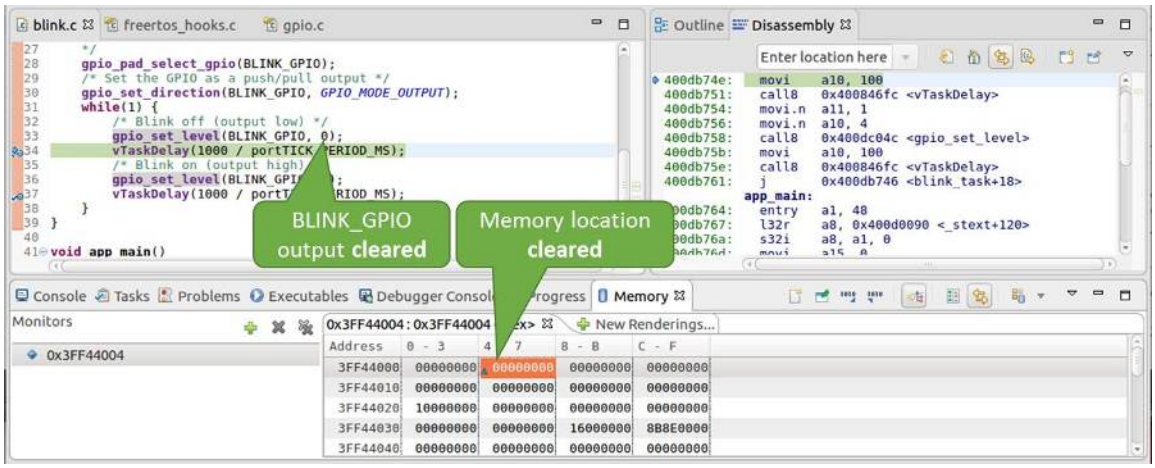

图 20: 观察内存地址 0x3FF44004 处的某个比特被置低

要修改内存的数值，请在“Monitor”选项卡中找到待修改的内存地址，如前面观察的结果一样，输入特定比特翻转后的值。当按下回车键后，将立即看到 LED 的状态发生了改变。

观察和设置程序变量

常见的调试任务是在程序运行期间检查程序中某个变量的值，为了演示这个功能，更新 `blink.c` 文件，在 `blink_task` 函数的上面添加一个全局变量的声明 `int i`，然后在 `while(1)` 里添加 `i++`，这样每次 LED 改变状态的时候，变量 `i` 都会增加 1。

退出调试器，这样就不会与新代码混淆，然后重新构建并烧写代码到 ESP32 中，接着重启调试器。注意，这里不需要我们重启 OpenOCD。

一旦程序停止运行，在代码 `i++` 处添加一个断点。

下一步，在 “Breakpoints” 所在的窗口中，选择 “Expressions” 选项卡。如果该选项卡不存在，请在顶部菜单栏的 Window > Show View > Expressions 中添加这一选项卡。然后在该选项卡中单击 “Add new expression”，并输入 `i`。

按下 F8 继续运行程序，每次程序停止时，都会看到变量 `i` 的值在递增。

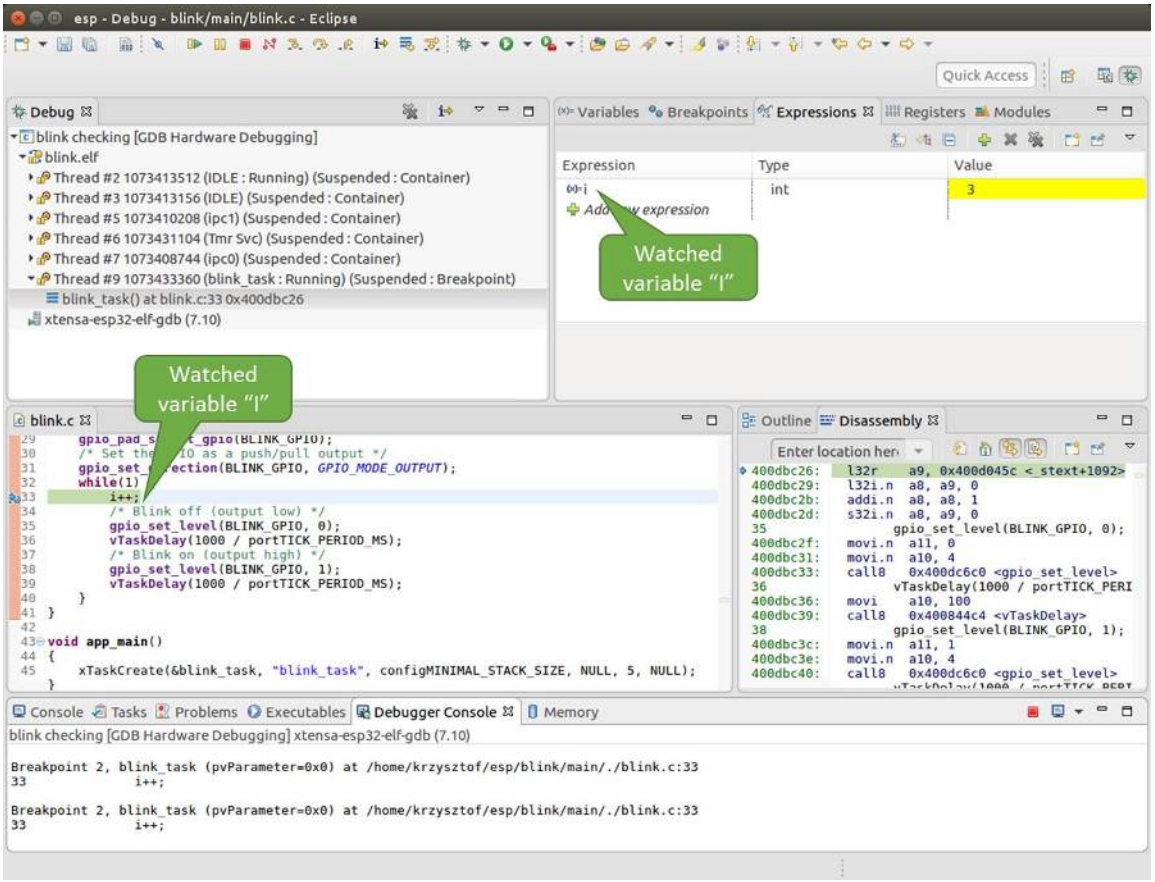

图 21: 观察程序变量 “i”

如想更改 `i` 的值，可以在 “Value” 一栏中输入新的数值。按下 “Resume (F8)” 后，程序将从新输入的数字开始递增 `i`。

设置条件断点

接下来的内容更为有趣，你可能想在一定条件满足的情况下设置断点，然后让程序停止运行。右击断点打开上下文菜单，选择 “Breakpoint Properties”，将 “Type:” 改选为 “Hardware” 然后在 “Condition:” 一栏中输入条件表达式，例如 `i == 2`。

如果当前 `i` 的值小于 2（如果有需要也可以更改这个阈值）并且程序被恢复运行，那么 LED 就会循环闪烁，直到 `i == 2` 条件成立，最后程序停止在该处。

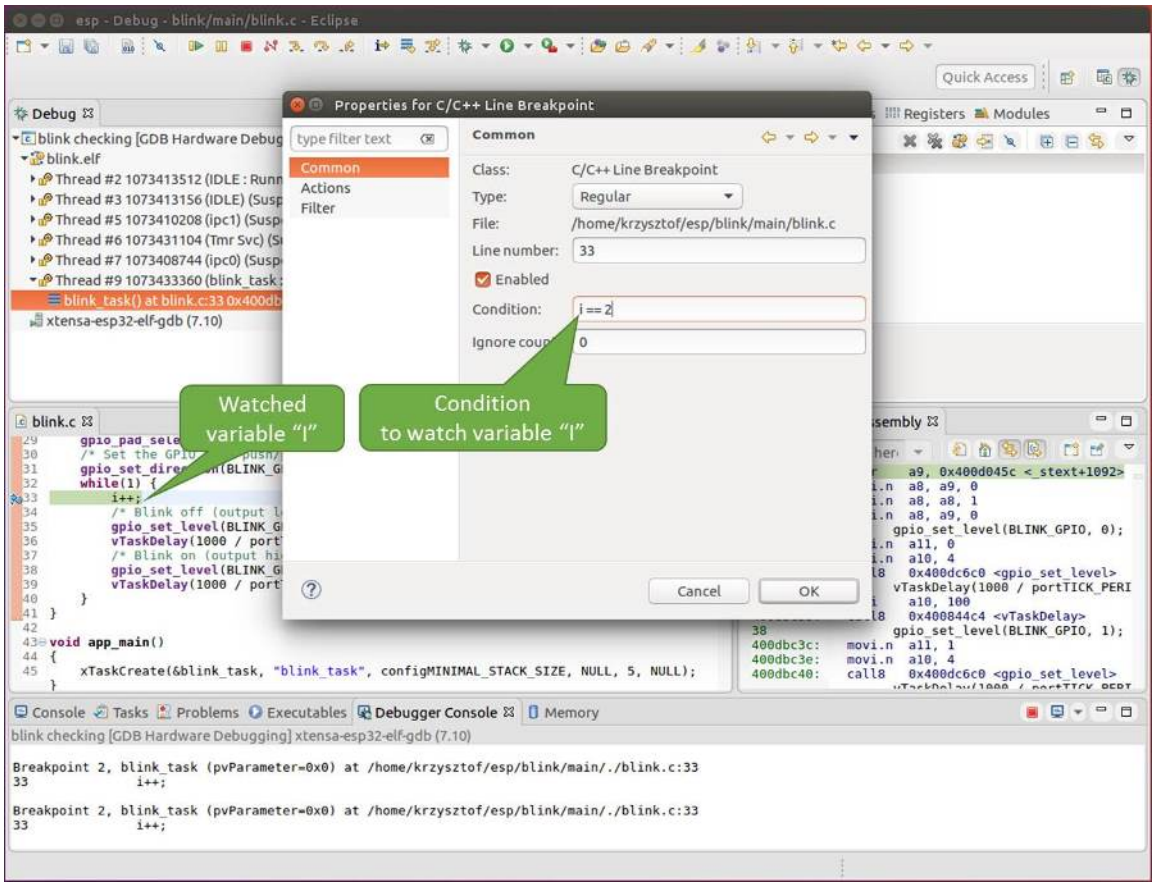
esp - Debug - blink/main/blink.c - Eclipse
Properties for C/C++ Line Breakpoint
Common
Actions
Filter
Class: C/C++ Line Breakpoint
Type: Regular
File: /home/krzysztof/esp/blink/main/blink.c
Line number: 33
Enabled
Condition: i == 2
Cancel
OK
Watched variable "I"
Condition to watch variable "I"
Debugger Console
Breakpoint 2, blink_task (pvParameter=0x0) at /home/krzysztof/esp/blink/main/./blink.c:33
33 i++;

图 22: 设置条件断点

使用命令行的调试示例

请检查您的目标板是否已经准备好，并加载了 get-started/blink 示例代码，然后按照*在命令行中使用 GDB* 中介绍的步骤配置和启动调试器，最后选择让应用程序在 app_main() 建立的断点处停止运行

```
Temporary breakpoint 1, app_main () at /home/user-name/esp/blink/main/./blink.c:43
43          xTaskCreate(&blink_task, "blink_task", configMINIMAL_STACK_SIZE, NULL, 5,␣
↪NULL);
(gdb)
```

本小节的示例

1. 浏览代码，查看堆栈和线程
2. 设置和清除断点
3. 暂停和恢复应用程序的运行
4. 单步执行代码
5. 查看并设置内存
6. 观察和设置程序变量
7. 设置条件断点

浏览代码，查看堆栈和线程

当看到（gdb）提示符的时候，应用程序已停止运行，LED 也停止闪烁。

要找到代码暂停的位置，输入 l 或者 list 命令，调试器会打印出停止点（blink.c 代码文件的第 43 行）附近的几行代码

```
(gdb) l
38          }
39      }
40
41      void app_main()
42      {
43          xTaskCreate(&blink_task, "blink_task", configMINIMAL_STACK_SIZE, NULL, 5,␣
↪NULL);
44      }
(gdb)
```

也可以通过输入 l 30，40 等命令来查看特定行号范围内的代码。

使用 bt 或者 backtrace 来查看哪些函数最终导致了此代码被调用:

```
(gdb) bt
#0  app_main () at /home/user-name/esp/blink/main/./blink.c:43
#1  0x400d057e in main_task (args=0x0) at /home/user-name/esp/esp-idf/components/esp32/./
↪cpu_start.c:339
(gdb)
```

输出的第 0 行表示应用程序暂停之前调用的最后一个函数，即我们之前列出的 app_main ()。app_main () 又被位于 cpu_start.c 文件第 339 行的 main_task 函数调用。

想查看 cpu_start.c 文件中 main_task 函数的上下文，需要输入 frame N，其中 N = 1，因为根据前面的输出，main_task 位于 #1 下:

```
(gdb) frame 1
#1  0x400d057e in main_task (args=0x0) at /home/user-name/esp/esp-idf/components/esp32/./
↪cpu_start.c:339
339         app_main();
(gdb)
```

输入 l 将显示一段名为 app_main() 的代码（在第 339 行）:

```
(gdb) l
334             ;
335         }
336     #endif
337         //Enable allocation in region where the startup stacks were located.
338         heap_caps_enable_nonos_stack_heaps();
339         app_main();
340         vTaskDelete(NULL);
341     }
342
(gdb)
```

通过打印前面的一些行，你会看到我们一直在寻找的 main_task 函数:

```
(gdb) l 326, 341
326     static void main_task(void* args)
327     {
328         // Now that the application is about to start, disable boot watchdogs
329         REG_CLR_BIT(TIMG_WDTCONFIG0_REG(0), TIMG_WDT_FLASHBOOT_MOD_EN_S);
330         REG_CLR_BIT(RTC_CNTL_WDTCONFIG0_REG, RTC_CNTL_WDT_FLASHBOOT_MOD_EN);
331     #if !CONFIG_FREERTOS_UNICORE
```

(下页继续)

(续上页)

```
332         // Wait for FreeRTOS initialization to finish on APP CPU, before replacing␣
↪its startup stack
333         while (port_xSchedulerRunning[1] == 0) {
334             ;
335         }
336     #endif
337         //Enable allocation in region where the startup stacks were located.
338         heap_caps_enable_nonos_stack_heaps();
339         app_main();
340         vTaskDelete(NULL);
341     }
(gdb)
```

如果要查看其他代码，可以输入 `i threads` 命令，则会输出目标板上运行的线程列表:

```
(gdb) i threads
  Id   Target Id         Frame
  8    Thread 1073411336 (dport) 0x400d0848 in dport_access_init_core (arg=<optimized␣
↪out>)
    at /home/user-name/esp/esp-idf/components/esp32/./dport_access.c:170
  7    Thread 1073408744 (ipc0) xQueueGenericReceive (xQueue=0x3ffae694, pvBuffer=0x0,␣
↪xTicksToWait=1644638200,
    xJustPeeking=0) at /home/user-name/esp/esp-idf/components/freertos/./queue.c:1452
  6    Thread 1073431096 (Tmr Svc) prvTimerTask (pvParameters=0x0)
    at /home/user-name/esp/esp-idf/components/freertos/./timers.c:445
  5    Thread 1073410208 (ipc1 : Running) 0x4000bfea in ?? ()
  4    Thread 1073432224 (dport) dport_access_init_core (arg=0x0)
    at /home/user-name/esp/esp-idf/components/esp32/./dport_access.c:150
  3    Thread 1073413156 (IDLE) prvIdleTask (pvParameters=0x0)
    at /home/user-name/esp/esp-idf/components/freertos/./tasks.c:3282
  2    Thread 1073413512 (IDLE) prvIdleTask (pvParameters=0x0)
    at /home/user-name/esp/esp-idf/components/freertos/./tasks.c:3282
* 1    Thread 1073411772 (main : Running) app_main () at /home/user-name/esp/blink/main/.
↪/blink.c:43
(gdb)
```

线程列表显示了每个线程最后一个被调用的函数以及所在的 C 源文件名（如果存在的话）。

您可以通过输入 `thread N` 进入特定的线程，其中 `N` 是线程 ID。我们进入 5 号线程来看一下它是如何工作的:

```
(gdb) thread 5
[Switching to thread 5 (Thread 1073410208)]
#0  0x4000bfea in ?? ()
(gdb)
```

然后查看回溯:

```
(gdb) bt
#0  0x4000bfea in ?? ()
#1  0x40083a85 in vPortCPUReleaseMutex (mux=<optimized out>) at /home/user-name/esp/esp-
↪idf/components/freertos/./port.c:415
#2  0x40083fc8 in vTaskSwitchContext () at /home/user-name/esp/esp-idf/components/
↪freertos/./tasks.c:2846
#3  0x4008532b in _frxt_dispatch ()
#4  0x4008395c in xPortStartScheduler () at /home/user-name/esp/esp-idf/components/
↪freertos/./port.c:222
#5  0x4000000c in ?? ()
#6  0x4000000c in ?? ()
#7  0x4000000c in ?? ()
#8  0x4000000c in ?? ()
(gdb)
```

如上所示，回溯可能会包含多个条目，方便查看直至目标停止运行的函数调用顺序。如果找不到某个函数的源码文件，将会使用问号 `??` 替代，这表示该函数是以二进制格式提供的。像 `0x4000bfea` 这样的值是被调用函数所在的内存地址。

使用诸如 `bt`，`i threads`，`thread N` 和 `list` 命令可以浏览整个应用程序的代码。这给单步调试代码和设置断点带来很大的便利，下面将一一展开来讨论。

设置和清除断点

在调试时，我们希望能够在关键的代码行停止应用程序，然后检查特定的变量、内存、寄存器和外设的状态。为此我们需要使用断点，以便在特定某行代码处快速访问和停止应用程序。

我们在控制 LED 状态发生变化的两处代码行分别设置一个断点。基于以上代码列表，这两处分别为第 33 和 36 代码行。使用命令 `break M` 设置断点，其中 M 是具体的代码行:

```
(gdb) break 33
Breakpoint 2 at 0x400db6f6: file /home/user-name/esp/blink/main/./blink.c, line 33.
(gdb) break 36
Breakpoint 3 at 0x400db704: file /home/user-name/esp/blink/main/./blink.c, line 36.
```

输入命令 c，处理器将运行并在断点处停止。再次输入 c 将使其再次运行，并在第二个断点处停止，依此类推:

```
(gdb) c
Continuing.
Target halted. PRO_CPU: PC=0x400DB6F6 (active)    APP_CPU: PC=0x400D10D8

Breakpoint 2, blink_task (pvParameter=0x0) at /home/user-name/esp/blink/main/./blink.c:33
33          gpio_set_level(BLINK_GPIO, 0);
(gdb) c
Continuing.
Target halted. PRO_CPU: PC=0x400DB6F8 (active)    APP_CPU: PC=0x400D10D8
Target halted. PRO_CPU: PC=0x400DB704 (active)    APP_CPU: PC=0x400D10D8

Breakpoint 3, blink_task (pvParameter=0x0) at /home/user-name/esp/blink/main/./blink.c:36
36          gpio_set_level(BLINK_GPIO, 1);
(gdb)
```

只有在输入命令 c 恢复程序运行后才能看到 LED 改变状态。

查看已设置断点的数量和位置，请使用命令 `info break`:

```
(gdb) info break
Num     Type           Disp Enb Address    What
2       breakpoint     keep y   0x400db6f6 in blink_task at /home/user-name/esp/blink/
↪main/./blink.c:33
    breakpoint already hit 1 time
3       breakpoint     keep y   0x400db704 in blink_task at /home/user-name/esp/blink/
↪main/./blink.c:36
    breakpoint already hit 1 time
(gdb)
```

请注意，断点序号（在 Num 栏列出）从 2 开始，这是因为在调试器启动时执行 `thb app_main` 命令已经在 `app_main()` 函数处建立了第一个断点。由于它是一个临时断点，已经被自动删除，所以没有被列出。

要删除一个断点，请输入 `delete N` 命令（或者简写成 `d N`），其中 N 代表断点序号:

```
(gdb) delete 1
No breakpoint number 1.
(gdb) delete 2
(gdb)
```

更多关于断点的信息，请参阅可用的断点和观察点 和关于断点的补充知识。

暂停和恢复应用程序的运行

在调试时，可以恢复程序运行并输入代码等待某个事件发生或者保持无限循环而不设置任何断点。对于后者，想要返回调试模式，可以通过输入 Ctrl+C 手动中断程序的运行。

在此之前，请删除所有的断点，然后输入 `c` 恢复程序运行。接着输入 Ctrl+C，应用程序会停止在某个随机的位置，此时 LED 也将停止闪烁。调试器会打印如下信息:

```
(gdb) c
Continuing.
^CTarget halted. PRO_CPU: PC=0x400D0C00             APP_CPU: PC=0x400D0C00 (active)
[New Thread 1073433352]

Program received signal SIGINT, Interrupt.
[Switching to Thread 1073413512]
0x400d0c00 in esp_vApplicationIdleHook () at /home/user-name/esp/esp-idf/components/
↪esp32/./freertos_hooks.c:52
52              asm("waiti 0");
(gdb)
```

在上图所示的情况下，应用程序已经在 `freertos_hooks.c` 文件的第 52 行暂停运行，现在您可以通过输入 `c` 再次将其恢复运行或者进行如下所述的一些调试工作。

注解: 在 MSYS2 的 shell 中输入 Ctrl+C 并不会暂停目标的运行，而是会退出调试器。解决这个问题的方法可以通过使用 *Eclipse* 来调试 或者参考 http://www.mingw.org/wiki/Workaround_for_GDB_Ctrl_C_Interrupt 里的解决方案。

单步执行代码

我们还可以使用 `step` 和 `next` 命令（可以简写成 `s` 和 `n`）单步执行代码，这两者之间的区别是执行 “step” 命令会进入调用的子程序内部，而执行 “next” 命令则会直接将子程序看成单个源码行，单步就能将其运行结束。

在继续演示此功能之前，请使用前面介绍的 `break` 和 `delete` 命令，确保目前只在 `blink.c` 文件的第 36 行设置了一个断点:

```
(gdb) info break
Num     Type           Disp Enb Address    What
3       breakpoint     keep y   0x400db704 in blink_task at /home/user-name/esp/blink/
↪main/./blink.c:36
    breakpoint already hit 1 time
```

(下页继续)

(续上页)

```
(gdb)
```

输入 c 恢复程序运行然后等它在断点处停止运行:

```
(gdb) c
Continuing.
Target halted. PRO_CPU: PC=0x400DB754 (active)    APP_CPU: PC=0x400D1128

Breakpoint 3, blink_task (pvParameter=0x0) at /home/user-name/esp/blink/main/./blink.c:36
36          gpio_set_level(BLINK_GPIO, 1);
(gdb)
```

然后输入 n 多次，观察调试器是如何单步执行一行代码的:

```
(gdb) n
Target halted. PRO_CPU: PC=0x400DB756 (active)    APP_CPU: PC=0x400D1128
Target halted. PRO_CPU: PC=0x400DB758 (active)    APP_CPU: PC=0x400D1128
Target halted. PRO_CPU: PC=0x400DC04C (active)    APP_CPU: PC=0x400D1128
Target halted. PRO_CPU: PC=0x400DB75B (active)    APP_CPU: PC=0x400D1128
37          vTaskDelay(1000 / portTICK_PERIOD_MS);
(gdb) n
Target halted. PRO_CPU: PC=0x400DB75E (active)    APP_CPU: PC=0x400D1128
Target halted. PRO_CPU: PC=0x400846FC (active)    APP_CPU: PC=0x400D1128
Target halted. PRO_CPU: PC=0x400DB761 (active)    APP_CPU: PC=0x400D1128
Target halted. PRO_CPU: PC=0x400DB746 (active)    APP_CPU: PC=0x400D1128
33          gpio_set_level(BLINK_GPIO, 0);
(gdb)
```

如果你输入 s，那么调试器将进入子程序:

```
(gdb) s
Target halted. PRO_CPU: PC=0x400DB748 (active)    APP_CPU: PC=0x400D1128
Target halted. PRO_CPU: PC=0x400DB74B (active)    APP_CPU: PC=0x400D1128
Target halted. PRO_CPU: PC=0x400DC04C (active)    APP_CPU: PC=0x400D1128
Target halted. PRO_CPU: PC=0x400DC04F (active)    APP_CPU: PC=0x400D1128
gpio_set_level (gpio_num=GPIO_NUM_4, level=0) at /home/user-name/esp/esp-idf/components/
↪driver/./gpio.c:183
183     GPIO_CHECK(GPIO_IS_VALID_OUTPUT_GPIO(gpio_num), "GPIO output gpio_num error",␣
↪ESP_ERR_INVALID_ARG);
(gdb)
```

上述例子中，调试器进入 gpio_set_level(BLINK_GPIO, 0) 代码内部，同时代码窗口快速切换到 gpio.c

驱动文件。

请参阅 "*next*" 命令无法跳过子程序的原因 文档以了解 `next` 命令的潜在局限。

查看并设置内存

使用命令 `x` 可以显示内存的内容，配合其余参数还可以调整所显示内存位置的格式和数量。运行 `help x` 可以查看更多相关细节。与 `x` 命令配合使用的命令是 `set`，它允许你将值写入内存。

为了演示 `x` 和 `set` 的使用，我们将在内存地址 `0x3FF44004` 处读取和写入内容。该地址也是 `GPIO_OUT_REG` 寄存器的地址，可以用来控制（设置或者清除）某个 GPIO 的电平。关于该寄存器的更多详细信息，请参阅 ESP32 技术参考手册 中的 IO_MUX 和 GPIO Matrix 章节。

同样在 `blink.c` 项目文件中，在两个 `gpio_set_level` 语句的后面各设置一个断点。输入两次 `c` 命令后停止在断点处，然后输入 `x /1wx 0x3FF44004` 来显示 `GPIO_OUT_REG` 寄存器的值:

```
(gdb) c
Continuing.
Target halted. PRO_CPU: PC=0x400DB75E (active)    APP_CPU: PC=0x400D1128
Target halted. PRO_CPU: PC=0x400DB74E (active)    APP_CPU: PC=0x400D1128

Breakpoint 2, blink_task (pvParameter=0x0) at /home/user-name/esp/blink/main/./blink.c:34
34          vTaskDelay(1000 / portTICK_PERIOD_MS);
(gdb) x /1wx 0x3FF44004
0x3ff44004: 0x00000000
(gdb) c
Continuing.
Target halted. PRO_CPU: PC=0x400DB751 (active)    APP_CPU: PC=0x400D1128
Target halted. PRO_CPU: PC=0x400DB75B (active)    APP_CPU: PC=0x400D1128

Breakpoint 3, blink_task (pvParameter=0x0) at /home/user-name/esp/blink/main/./blink.c:37
37          vTaskDelay(1000 / portTICK_PERIOD_MS);
(gdb) x /1wx 0x3FF44004
0x3ff44004: 0x00000010
(gdb)
```

如果闪烁的 LED 连接到了 GPIO4，那么每次 LED 改变状态时你会看到第 4 比特被翻转:

```
0x3ff44004: 0x00000000
...
0x3ff44004: 0x00000010
```

现在，当 LED 熄灭时，与之对应地会显示 `0x3ff44004: 0x00000000`，尝试使用 `set` 命令向相同的内存地址写入 `0x00000010` 来将该比特置高:

```
(gdb) x /1wx 0x3FF44004
0x3ff44004: 0x00000000
(gdb) set {unsigned int}0x3FF44004=0x000010
```

在输入 `set {unsigned int}0x3FF44004=0x000010` 命令后，你会立即看到 LED 亮起。

观察和设置程序变量

常见的调试任务是在程序运行期间检查程序中某个变量的值，为了能够演示这个功能，更新 `blink.c` 文件，在 `blink_task` 函数的上面添加一个全局变量的声明 `int i`，然后在 `while(1)` 里添加 `i++`，这样每次 LED 改变状态的时候，变量 `i` 都会增加 1。

退出调试器，这样就不会与新代码混淆，然后重新构建并烧写代码到 ESP32 中，接着重启调试器。注意，这里不需要我们重启 OpenOCD。

一旦程序停止运行，输入命令 `watch i`:

```
(gdb) watch i
Hardware watchpoint 2: i
(gdb)
```

这会在所有变量 `i` 发生改变的代码处插入所谓的 “观察点”。现在输入 `continue` 命令来恢复应用程序的运行并观察它停止:

```
(gdb) c
Continuing.
Target halted. PRO_CPU: PC=0x400DB751 (active)    APP_CPU: PC=0x400D0811
[New Thread 1073432196]

Program received signal SIGTRAP, Trace/breakpoint trap.
[Switching to Thread 1073432196]
0x400db751 in blink_task (pvParameter=0x0) at /home/user-name/esp/blink/main/./blink.c:33
33          i++;
(gdb)
```

多次恢复程序运行后，变量 `i` 的值会增加，现在你可以输入 `print i` （简写 `p i`）来查看当前 `i` 的值:

```
(gdb) p i
$1 = 3
(gdb)
```

要修改 `i` 的值，请使用 `set` 命令，如下所示（可以将其打印输出来查看是否确已修改）:

```
(gdb) set var i = 0
(gdb) p i
$3 = 0
(gdb)
```

最多可以使用两个观察点，详细信息请参阅可用的断点和观察点。

设置条件断点

接下来的内容更为有趣，你可能想在一定条件满足的情况下设置断点。请先删除已有的断点，然后尝试如下命令:

```
(gdb) break blink.c:34 if (i == 2)
Breakpoint 3 at 0x400db753: file /home/user-name/esp/blink/main/./blink.c, line 34.
(gdb)
```

以上命令在 `blink.c` 文件的 34 处设置了一个条件断点，当 `i==2` 条件满足时，程序会停止运行。

如果当前 `i` 的值小于 2 并且程序被恢复运行，那么 LED 就会循环闪烁，直到 `i == 2` 条件成立，最后程序停止在该处:

```
(gdb) set var i = 0
(gdb) c
Continuing.
Target halted. PRO_CPU: PC=0x400DB755 (active)    APP_CPU: PC=0x400D112C
Target halted. PRO_CPU: PC=0x400DB753 (active)    APP_CPU: PC=0x400D112C
Target halted. PRO_CPU: PC=0x400DB755 (active)    APP_CPU: PC=0x400D112C
Target halted. PRO_CPU: PC=0x400DB753 (active)    APP_CPU: PC=0x400D112C

Breakpoint 3, blink_task (pvParameter=0x0) at /home/user-name/esp/blink/main/./blink.c:34
34          gpio_set_level(BLINK_GPIO, 0);
(gdb)
```

获得命令的帮助信息

目前所介绍的都是些非常基础的命令，目的在于让您快速上手 JTAG 调试。如果想获得特定命令的语法和功能相关的信息，请在 `(gdb)` 提示符下输入 `help` 和命令名:

```
(gdb) help next
Step program, proceeding through subroutine calls.
Usage: next [N]
```

(下页继续)

(续上页)

```
Unlike "step", if the current source line calls a subroutine,
this command does not enter the subroutine, but instead steps over
the call, in effect treating it as a single source line.
(gdb)
```

只需输入 `help` 命令，即可获得高级命令列表，帮助你了解更多详细信息。此外，还可以参考一些 GDB 命令速查表，比如 http://darkdust.net/files/GDB%20Cheat%20Sheet.pdf。虽然不是所有命令都适用于嵌入式环境，但还是会有所裨益。

结束调试会话

输入命令 `q` 可以退出调试器:

```
(gdb) q
A debugging session is active.

    Inferior 1 [Remote target] will be detached.

Quit anyway? (y or n) y
Detaching from program: /home/user-name/esp/blink/build/blink.elf, Remote target
Ending remote debugging.
user-name@computer-name:~/esp/blink$
```

注意事项和补充内容

[English]

本节提供了本指南中各部分提到的一些注意事项和补充内容。

可用的断点和观察点

ESP32 调试器支持 2 个硬件断点和 64 个软件断点。硬件断点是由 ESP32 芯片内部的逻辑电路实现的，能够设置在代码的任何位置：闪存或者 IRAM 的代码区域。除此以外，OpenOCD 实现了两种软件断点：闪存断点（最多 32 个）和 IRAM 断点（最多 32 个）。目前 GDB 无法在闪存中设置软件断点，因此除非解决此限制，否则这些断点只能由 OpenOCD 模拟为硬件断点。(详细信息可以参阅下面)。ESP32 还支持 2 个观察点，所以可以观察两个变量的变化或者通过 GDB 命令 `watch myVariable` 来读取变量的值。请注意 menuconfig 中的*CONFIG_FREERTOS_WATCHPOINT_END_OF_STACK* 选项会使用第二个观察点，如果你想在 OpenOCD 或者 GDB 中再次尝试使用这个观察点，可能不会得到预期的结果。详情请查看 menuconfig 中的帮助文档。

关于断点的补充知识

使用软件闪存模拟部分硬件断点的意思就是当使用 GDB 命令 `hb myFunction` 给某个函数设置硬件断点时，如果该函数位于闪存中，并且此时还有可用的硬件断点，那调试器就会使用硬件断点，否则就使用 32 个软件闪存断点中的一个来模拟。这个规则同样适用于 `b myFunction` 之类的命令，在这种情况下，GDB 会自己决定该使用哪种类型的断点。如果 `myFunction` 位于可写区域（IRAM），那就会使用软件 IRAM 断点，否则就会像处理 `hb` 命令一样使用硬件断点或者软件闪存断点。

闪存映射 vs 软件闪存断点

为了在闪存中设置或者清除软件断点，OpenOCD 需要知道它们在闪存中的地址。为了完成从 ESP32 的地址空间到闪存地址的转换，OpenOCD 使用闪存中程序代码区域的映射。这些映射被保存在程序映像的头部，位于二进制数据（代码段和数据段）之前，并且特定于写入闪存的每一个应用程序的映像。因此，为了支持软件闪存断点，OpenOCD 需要知道待调试的应用程序映像在闪存中的位置。默认情况下，OpenOCD 会在 0x8000 处读取分区表并使用第一个找到的应用程序映像的映射，但是也可能会存在无法工作的情况，比如分区表不在标准的闪存位置，甚至可能有多个映像：一个出厂映像和两个 OTA 映像，你可能想要调试其中的任意一个。为了涵盖所有可能的调试情况，OpenOCD 支持特殊的命令，用于指定待调试的应用程序映像在闪存中的具体位置。该命令具有以下格式：

```
esp32 appimage_offset <offset>
```

偏移量应为十六进制格式，如果要恢复默认行为，可以将偏移地址设置为 `-1` 。

注解： 由于 GDB 在连接 OpenOCD 时仅仅请求一次内存映射，所以可以在 TCL 配置文件中指定该命令，或者通过命令行传递给 OpenOCD。对于后者，命令行示例如下：

```
bin/openocd -s share/openocd/scripts -f interface/ftdi/esp32_devkitj_v1.cfg -f board/
esp-wroom-32.cfg -c "init; halt; esp32 appimage_offset 0x210000"
```

另外还可以通过 OpenOCD 的 telnet 会话执行该命令，然后再连接 GDB，不过这种方式似乎没有那么便捷。

“next” 命令无法跳过子程序的原因

当使用 `next` 命令单步执行代码时，GDB 会在子程序的前面设置一个断点（两个中可用的一个），这样就可以跳过进入子程序内部的细节。如果这两个断点已经用在代码的其它位置，那么 `next` 命令将不起作用。在这种情况下，请删掉一个断点以使其中一个变得可用。当两个断点都已经被使用时，`next` 命令会像 `step` 命令一样工作，调试器就会进入子程序内部。

OpenOCD 支持的编译时的选项

ESP-IDF 有一些针对 OpenOCD 调试功能的选项可以在编译时进行设置：

- *CONFIG_ESP32_DEBUG_OCDAWARE* 默认会被使能。如果程序抛出了不可修复或者未处理的异常，并且此时已经连接上了 JTAG 调试器（即 OpenOCD 正在运行），那么 ESP-IDF 将会进入调试器工作模式。
- *CONFIG_FREERTOS_WATCHPOINT_END_OF_STACK* 默认没有使能。在所有任务堆栈的末尾设置观察点，从 1 号开始索引。这是调试任务堆栈溢出的最准确的方式。

更多有关设置编译时的选项的信息，请参阅*make menuconfig*。

支持 FreeRTOS

OpenOCD 完全支持 ESP-IDF 自带的 FreeRTOS 操作系统，GDB 会将 FreeRTOS 中的任务当做线程。使用 GDB 命令 `i threads` 可以查看所有的线程，使用命令 `thread n` 可以切换到某个具体任务的堆栈，其中 `n` 是线程的编号。检测 FreeRTOS 的功能可以在配置目标时被禁用。更多详细信息，请参阅*针对特定目标的 OpenOCD 配置*.

在 OpenOCD 的配置文件中设置 SPI 闪存的工作电压

ESP32 的 MTDI 引脚是用于 JTAG 通信的四个引脚之一，同时也是 ESP32 的 bootstrapping 引脚。上电时，ESP32 会在 MTDI 引脚上采样二进制电平，据此来设置内部的稳压器，用于给外部的 SPI 闪存芯片供电。如果上电时 MTDI 引脚上的二进制电平为低电平，则稳压器会被设置为 3.3 V；如果 MTDI 引脚为高电平，则稳压器会被设置为 1.8 V。MTDI 引脚通常需要一个上拉电阻或者直接使能内部的弱下拉电阻（详见 ESP32 系列芯片技术规格书 ），具体取决于所使用的 SPI 芯片的类型。但是一旦连接上 JTAG 后，原来用于实现 bootstrapping 功能的上拉或者下拉电阻都会被覆盖掉。

为了解决这个问题，OpenOCD 的板级配置文件（例如 ESP32-WROOM-32 模组的 `boards\esp-wroom-32.cfg`）提供了 `ESP32_FLASH_VOLTAGE` 参数来设置 `TDO` 信号线在空闲状态下的二进制电平，这样就可以减少由于闪存电压不正确而导致的应用程序启动不良的几率。

查看 JTAG 连接的 ESP32 模组的规格书，检查其 SPI 闪存芯片的供电电压值，然后再相应的设置 `ESP32_FLASH_VOLTAGE`。大多数的 WROOM 模组使用 3.3 V 的闪存芯片，但是 WROVER 模组使用 1.8 V 的闪存芯片。

优化 JTAG 的速度

为了实现更高的数据通信速率同时最小化丢包数，建议优化 JTAG 时钟频率的设置，使其达到 JTAG 能稳定运行的最大值。为此，请参考以下建议。

1. 如果 CPU 以 80 MHz 运行，则 JTAG 时钟频率的上限为 20 MHz；如果 CPU 以 160 MHz 或者 240 MHz 运行，则上限为 26 MHz。
2. 根据特定的 JTAG 适配器和连接线缆的长度，你可能需要将 JTAG 的工作频率降低至 20 / 26 MHz 以下。

3. 在某些特殊情况下，如果你看到 DSR/DIR 错误（并且它并不是由 OpenOCD 试图从一个没有物理存储器映射的地址空间读取数据而导致的），请降低 JTAG 的工作频率。
4. ESP-WROVER-KIT 能够稳定运行在 20 / 26 MHz 频率下。

调试器的启动命令的含义

在启动时，调试器发出一系列命令来复位芯片并使其在特定的代码行停止运行。这个命令序列（如下所示）支持自定义，用户可以选择在最方便合适的代码行开始调试工作。

- `set remote hardware-watchpoint-limit 2` —限制 GDB 仅使用 ESP32 支持的两个硬件观察点。更多详细信息，请查阅 GDB 配置远程目标 。
- `mon reset halt` —复位芯片并使 CPU 停止运行。
- `flushregs` —monitor (`mon`) 命令无法通知 GDB 目标状态已经更改，GDB 会假设在 `mon reset halt` 之前所有的任务堆栈仍然有效。实际上，复位后目标状态将发生变化。执行 `flushregs` 是一种强制 GDB 从目标获取最新状态的方法。
- `thb app_main` —在 `app_main` 处插入一个临时的硬件断点，如果有需要，可以将其替换为其他函数名。
- `c` —恢复程序运行，它将会在 `app_main` 的断点处停止运行。

针对特定目标的 OpenOCD 配置

OpenOCD 需要知道当前使用的 JTAG 适配器的类型，以及其连接的目标板和处理器的类型。为此，请使用位于 OpenOCD 安装目录下 `share/openocd/scripts/interface` 和 `share/openocd/scripts/board` 文件夹中现有的配置文件。

例如，如果使用板载 ESP-WROOM-32 模组的 ESP-WROVER-KIT 开发板（详见*ESP-WROVER-KIT V1 / ESP32 DevKitJ V1*），请使用以下配置文件：

- `interface/ftdi/esp32_devkitj_v1.cfg`
- `board/esp-wroom-32.cfg`

当然也可以使用自定义的配置文件，建议在已有配置文件的基础上进行修改，以匹配你的硬件。下面列举一些常用的板级配置参数。

适配器的时钟速度

```
adapter_khz 20000
```

请参阅*优化 JTAG 的速度* 以获取有关如何设置此值的指导。

单核调试

```
set ESP32_ONLYCPU 1
```

如果是双核调试，请注释掉这一行。

禁用 RTOS 支持

```
set ESP32_RTOS none
```

如果要支持 RTOS，请注释掉这一行。

ESP32 的 SPI 闪存芯片的电源电压

```
set ESP32_FLASH_VOLTAGE 1.8
```

如果 SPI 闪存芯片的电源电压为 3.3 V，请注释掉这一行，更多信息请参阅：*在 OpenOCD 的配置文件中设置 SPI 闪存的工作电压*。

ESP32 的目标配置文件

```
source [find target/esp32.cfg]
```

注解： 除非你熟悉 OpenOCD 内部的工作原理，否则请不要更改 `source [find target/esp32.cfg]` 这一行。

目前 `target/esp32.cfg` 仍然是 ESP32 目标（esp108 和 esp32）的唯一配置文件。支持的配置矩阵如下所示：

Dual/single	RTOS	Target used
dual	FreeRTOS	esp32
single	FreeRTOS	esp108 (*)
dual	none	esp108
single	none	esp108

(*) —我们计划修复此问题，并在后续提交中添加对 esp32 目标的单核调试的支持。

更多信息，请查看 `board/esp-wroom-32.cfg` 配置文件的注释部分。

复位 ESP32

通过在 GDB 中输入 `mon reset` 或者 `mon reset halt` 来复位板子。

不要将 JTAG 引脚用于其他功能

如果除了 ESP32 模组和 JTAG 适配器之外的其他硬件也连接到了 JTAG 引脚，那么 JTAG 的操作可能会受到干扰。ESP32 JTAG 使用以下引脚：

	ESP32 JTAG Pin	JTAG Signal
1	MTDO / GPIO15	TDO
2	MTDI / GPIO12	TDI
3	MTCK / GPIO13	TCK
4	MTMS / GPIO14	TMS

如果用户应用程序更改了 JTAG 引脚的配置，JTAG 通信可能会失败。如果 OpenOCD 正确初始化（检测到两个 Tensilica 内核），但在程序运行期间失去了同步并报出大量 DTR/DIR 错误，则应用程序可能将 JTAG 引脚重新配置为其他功能或者用户忘记将 Vtar 连接到 JTAG 适配器。

下面是 GDB 在应用程序进入重新配置 MTDO/GPIO15 作为输入代码后报告的一系列错误摘录：

```
cpu0: xtensa_resume (line 431): DSR (FFFFFFFF) indicates target still busy!
cpu0: xtensa_resume (line 431): DSR (FFFFFFFF) indicates DIR instruction generated an␣
↪exception!
cpu0: xtensa_resume (line 431): DSR (FFFFFFFF) indicates DIR instruction generated an␣
↪overrun!
cpu1: xtensa_resume (line 431): DSR (FFFFFFFF) indicates target still busy!
cpu1: xtensa_resume (line 431): DSR (FFFFFFFF) indicates DIR instruction generated an␣
↪exception!
cpu1: xtensa_resume (line 431): DSR (FFFFFFFF) indicates DIR instruction generated an␣
↪overrun!
```

JTAG with Flash Encryption or Secure Boot

By default, enabling Flash Encryption and/or Secure Boot will disable JTAG debugging. On first boot, the bootloader will burn an eFuse bit to permanently disable JTAG at the same time it enables the other features.

The project configuration option *CONFIG_SECURE_BOOT_ALLOW_JTAG* will keep JTAG enabled at this time, removing all physical security but allowing debugging. (Although the name suggests Secure Boot, this option can be applied even when only Flash Encryption is enabled).

However, OpenOCD may attempt to automatically read and write the flash in order to set *software breakpoints*. This has two problems:

- Software breakpoints are incompatible with Flash Encryption, OpenOCD currently has no support for encrypting or decrypting flash contents.
- If Secure Boot is enabled, setting a software breakpoint will change the digest of a signed app and make the signature invalid. This means if a software breakpoint is set and then a reset occurs, the signature verification will fail on boot.

To disable software breakpoints while using JTAG, add an extra argument `-c 'set ESP_FLASH_SIZE 0'` to the start of the OpenOCD command line. For example:

```
openocd -c 'set ESP_FLASH_SIZE 0' -f board/esp32-wrover-kit-3.3v.cfg
```

注解: For the same reason, the ESP-IDF app may fail bootloader verification of app signatures, when this option is enabled and a software breakpoint is set.

报告 OpenOCD / GDB 的问题

如果你遇到 OpenOCD 或者 GDB 程序本身的问题，并且在网上没有找到可用的解决方案，请前往 https://github.com/espressif/openocd-esp32/issues 新建一个议题。

1. 请在问题报告中提供你使用的配置的详细信息：
   a. JTAG 适配器类型。
   b. 用于编译和加载正在调试的应用程序的 ESP-IDF 版本号。
   c. 用于调试的操作系统的详细信息。
   d. 操作系统是在本地计算机运行还是在虚拟机上运行?
2. 创建一个能够演示问题的简单示例工程，描述复现该问题的步骤。且这个调试示例不能受到 Wi-Fi 协议栈引入的非确定性行为的影响，因而再次遇到同样问题时，更容易复现。
3. 在启动命令中添加额外的参数来输出调试日志。

   OpenOCD 端：

   ```
   bin/openocd -l openocd_log.txt -d 3 -s share/openocd/scripts -f interface/
   ↪ftdi/esp32_devkitj_v1.cfg -f board/esp-wroom-32.cfg
   ```

   这种方式会将日志输出到文件，但是它会阻止调试信息打印在终端上。当有大量信息需要输出的时候（比如调试等级提高到 `-d 3`）这是个不错的选择。如果你仍然希望在屏幕上看到调试日志，请改用以下命令：

```
bin/openocd -d 3 -s share/openocd/scripts -f interface/ftdi/esp32_devkitj_
↪v1.cfg -f board/esp-wroom-32.cfg 2>&1 | tee openocd.log
```

注解： 如果运行的 OpenOCD 是从源码自行编译的，命令的格式会有些许不同，具体请参阅：*从源码构建 OpenOCD*。

Debugger 端：

```
xtensa-esp32-elf-gdb -ex "set remotelogfile gdb_log.txt" <all other options>
```

也可以将命令 `remotelogfile gdb_log.txt` 添加到 `gdbinit` 文件中。

4. 请将 `openocd_log.txt` 和 `gdb_log.txt` 文件附在你的问题报告中。

Application Level Tracing library

Overview

IDF provides useful feature for program behaviour analysis: application level tracing. It is implemented in the corresponding library and can be enabled in menuconfig. This feature allows to transfer arbitrary data between host and ESP32 via JTAG interface with small overhead on program execution.

Developers can use this library to send application specific state of execution to the host and receive commands or other type of info in the opposite direction at runtime. The main use cases of this library are:

1. Collecting application specific data, see *Application Specific Tracing*
2. Lightweight logging to the host, see *Logging to Host*
3. System behaviour analysis, see *System Behaviour Analysis with SEGGER SystemView*

Tracing components when working over JTAG interface are shown in the figure below.

Modes of Operation

The library supports two modes of operation:

Post-mortem mode. This is the default mode. The mode does not need interaction from the host side. In this mode tracing module does not check whether host has read all the data from *HW UP BUFFER* buffer and overwrites old data with the new ones. This mode is useful when only the latest trace data are interesting to the user, e.g. for analyzing program' s behaviour just before the crash. Host can read the data later on upon user request, e.g. via special OpenOCD command in case of working via JTAG interface.

Streaming mode. Tracing module enters this mode when host connects to ESP32. In this mode before writing new data to *HW UP BUFFER* tracing module checks that there is enough space in it and if necessary waits

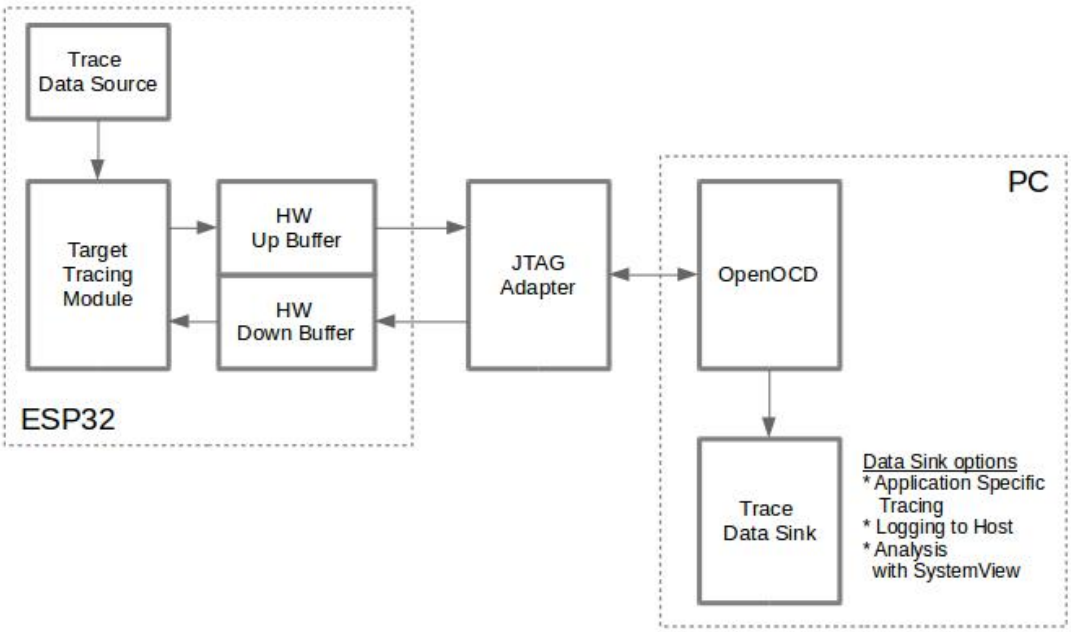

图 23: Tracing Components when Working Over JTAG

for the host to read data and free enough memory. Maximum waiting time is controled via timeout values passed by users to corresponding API routines. So when application tries to write data to trace buffer using finite value of the maximum waiting time it is possible situation that this data will be dropped. Especially this is true for tracing from time critical code (ISRs, OS scheduler code etc.) when infinite timeouts can lead to system malfunction. In order to avoid loss of such critical data developers can enable additional data buffering via menuconfig option *CONFIG_ESP32_APPTRACE_PENDING_DATA_SIZE_MAX*. This macro specifies the size of data which can be buffered in above conditions. The option can also help to overcome situation when data transfer to the host is temporarily slowed down, e.g due to USB bus congestions etc. But it will not help when average bitrate of trace data stream exceeds HW interface capabilities.

Configuration Options and Dependencies

Using of this feature depends on two components:

1. **Host side:** Application tracing is done over JTAG, so it needs OpenOCD to be set up and running on host machine. For instructions how to set it up, please, see *JTAG Debugging* for details.
2. **Target side:** Application tracing functionality can be enabled in menuconfig. *Component config > Application Level Tracing* menu allows selecting destination for the trace data (HW interface for transport). Choosing any of the destinations automatically enables `CONFIG_ESP32_APPTRACE_ENABLE` option.

注解: In order to achieve higher data rates and minimize number of dropped packets it is recommended to optimize setting of JTAG clock frequency, so it is at maximum and still provides stable operation of JTAG, see 优化 *JTAG* 的速度.

There are two additional menuconfig options not mentioned above:

1. *Threshold for flushing last trace data to host on panic* (*CONFIG_ESP32_APPTRACE_POSTMORTEM_FLUSH_TRAX_THRESH*). This option is necessary due to the nature of working over JTAG. In that mode trace data are exposed to the host in 16KB blocks. In post-mortem mode when one block is filled it is exposed to the host and the previous one becomes unavailable. In other words trace data are overwritten in 16KB granularity. On panic the latest data from the current input block are exposed to host and host can read them for post-analysis. It can happen that system panic occurs when there are very small amount of data which are not exposed to the host yet. In this case the previous 16KB of collected data will be lost and host will see the latest, but very small piece of the trace. It can be insufficient to diagnose the problem. This menuconfig option allows avoiding such situations. It controls the threshold for flushing data in case of panic. For example user can decide that it needs not less then 512 bytes of the recent trace data, so if there is less then 512 bytes of pending data at the moment of panic they will not be flushed and will not overwrite previous 16KB. The option is only meaningful in post-mortem mode and when working over JTAG.
2. *Timeout for flushing last trace data to host on panic* (*CONFIG_ESP32_APPTRACE_ONPANIC_HOST_FLUSH_TMO*). The option is only meaningful in streaming mode and controls the maximum time tracing module will wait for the host to read the last data in case of panic.

How to use this library

This library provides API for transferring arbitrary data between host and ESP32. When enabled in menuconfig target application tracing module is initialized automatically at the system startup, so all what the user needs to do is to call corresponding API to send, receive or flush the data.

Application Specific Tracing

In general user should decide what type of data should be transferred in every direction and how these data must be interpreted (processed). The following steps must be performed to transfer data between target and host:

1. On target side user should implement algorithms for writing trace data to the host. Piece of code below shows an example how to do this.

```
#include "esp_app_trace.h"
...
char buf[] = "Hello World!";
esp_err_t res = esp_apptrace_write(ESP_APPTRACE_DEST_TRAX, buf, strlen(buf), ESP_
↪APPTRACE_TMO_INFINITE);
if (res != ESP_OK) {
    ESP_LOGE(TAG, "Failed to write data to host!");
    return res;
}
```

`esp_apptrace_write()` function uses memcpy to copy user data to the internal buffer. In some cases it can be more optimal to use `esp_apptrace_buffer_get()` and `esp_apptrace_buffer_put()` functions. They allow developers to allocate buffer and fill it themselves. The following piece of code shows how to do this.

```
#include "esp_app_trace.h"
...
int number = 10;
char *ptr = (char *)esp_apptrace_buffer_get(ESP_APPTRACE_DEST_TRAX, 32, 100/*tmo in␣
↪us*/);
if (ptr == NULL) {
    ESP_LOGE("Failed to get buffer!");
    return ESP_FAIL;
}
sprintf(ptr, "Here is the number %d", number);
esp_err_t res = esp_apptrace_buffer_put(ESP_APPTRACE_DEST_TRAX, ptr, 100/*tmo in␣
↪us*/);
if (res != ESP_OK) {
    /* in case of error host tracing tool (e.g. OpenOCD) will report incomplete␣
↪user buffer */
    ESP_LOGE("Failed to put buffer!");
    return res;
}
```

Also according to his needs user may want to receive data from the host. Piece of code below shows an example how to do this.

```
#include "esp_app_trace.h"
...
char buf[32];
char down_buf[32];
```

(下页继续)

(续上页)

```
size_t sz = sizeof(buf);

/* config down buffer */
esp_apptrace_down_buffer_config(down_buf, sizeof(down_buf));
/* check for incoming data and read them if any */
esp_err_t res = esp_apptrace_read(ESP_APPTRACE_DEST_TRAX, buf, &sz, 0/*do not wait*/
↪);
if (res != ESP_OK) {
    ESP_LOGE(TAG, "Failed to read data from host!");
    return res;
}
if (sz > 0) {
    /* we have data, process them */
    ...
}
```

`esp_apptrace_read()` function uses memcpy to copy host data to user buffer. In some cases it can be more optimal to use `esp_apptrace_down_buffer_get()` and `esp_apptrace_down_buffer_put()` functions. They allow developers to occupy chunk of read buffer and process it in-place. The following piece of code shows how to do this.

```
#include "esp_app_trace.h"
...
char down_buf[32];
uint32_t *number;
size_t sz = 32;

/* config down buffer */
esp_apptrace_down_buffer_config(down_buf, sizeof(down_buf));
char *ptr = (char *)esp_apptrace_down_buffer_get(ESP_APPTRACE_DEST_TRAX, &sz, 100/
↪*tmo in us*/);
if (ptr == NULL) {
    ESP_LOGE("Failed to get buffer!");
    return ESP_FAIL;
}
if (sz > 4) {
    number = (uint32_t *)ptr;
    printf("Here is the number %d", *number);
} else {
    printf("No data");
```

(下页继续)

(续上页)

```
}
esp_err_t res = esp_apptrace_down_buffer_put(ESP_APPTRACE_DEST_TRAX, ptr, 100/*tmo␣
↪in us*/);
if (res != ESP_OK) {
    /* in case of error host tracing tool (e.g. OpenOCD) will report incomplete␣
↪user buffer */
    ESP_LOGE("Failed to put buffer!");
    return res;
}
```

2. The next step is to build the program image and download it to the target as described in *Build and Flash*.
3. Run OpenOCD (see *JTAG Debugging*).
4. Connect to OpenOCD telnet server. It can be done using the following command in terminal `telnet <oocd_host> 4444`. If telnet session is opened on the same machine which runs OpenOCD you can use `localhost` as `<oocd_host>` in the command above.
5. Start trace data collection using special OpenOCD command. This command will transfer tracing data and redirect them to specified file or socket (currently only files are supported as trace data destination). For description of the corresponding commands see *OpenOCD Application Level Tracing Commands*.
6. The final step is to process received data. Since format of data is defined by user the processing stage is out of the scope of this document. Good starting points for data processor are python scripts in `$IDF_PATH/tools/esp_app_trace`: `apptrace_proc.py` (used for feature tests) and `logtrace_proc.py` (see more details in section *Logging to Host*).

OpenOCD Application Level Tracing Commands

HW UP BUFFER is shared between user data blocks and filling of the allocated memory is performed on behalf of the API caller (in task or ISR context). In multithreading environment it can happen that task/ISR which fills the buffer is preempted by another high priority task/ISR. So it is possible situation that user data preparation process is not completed at the moment when that chunk is read by the host. To handle such conditions tracing module prepends all user data chunks with header which contains allocated user buffer size (2 bytes) and length of actually written data (2 bytes). So total length of the header is 4 bytes. OpenOCD command which reads trace data reports error when it reads incomplete user data chunk, but in any case it puts contents of the whole user chunk (including unfilled area) to output file.

Below is the description of available OpenOCD application tracing commands.

注解: Currently OpenOCD does not provide commands to send arbitrary user data to the target.

Command usage:

```
esp32 apptrace [start <options>] | [stop] | [status] | [dump <cores_num> <outfile>]
```

Sub-commands:

start Start tracing (continuous streaming).

stop Stop tracing.

status Get tracing status.

dump Dump all data from (post-mortem dump).

Start command syntax:

```
start <outfile> [poll_period [trace_size [stop_tmo [wait4halt [skip_size]]]]
```

outfile Path to file to save data from both CPUs. This argument should have the following format: `file://path/to/file`.

poll_period Data polling period (in ms) for available trace data. If greater then 0 then command runs in non-blocking mode. By default 1 ms.

trace_size Maximum size of data to collect (in bytes). Tracing is stopped after specified amount of data is received. By default -1 (trace size stop trigger is disabled).

stop_tmo Idle timeout (in sec). Tracing is stopped if there is no data for specified period of time. By default -1 (disable this stop trigger). Optionally set it to value longer than longest pause between tracing commands from target.

wait4halt If 0 start tracing immediately, otherwise command waits for the target to be halted (after reset, by breakpoint etc.) and then automatically resumes it and starts tracing. By default 0.

skip_size Number of bytes to skip at the start. By default 0.

注解: If `poll_period` is 0, OpenOCD telnet command line will not be available until tracing is stopped. You must stop it manually by resetting the board or pressing Ctrl+C in OpenOCD window (not one with the telnet session). Another option is to set `trace_size` and wait until this size of data is collected. At this point tracing stops automatically.

Command usage examples:

1. Collect 2048 bytes of tracing data to a file "trace.log". The file will be saved in "openocd-esp32" directory.

```
esp32 apptrace start file://trace.log 1 2048 5 0 0
```

The tracing data will be retrieved and saved in non-blocking mode. This process will stop automatically after 2048 bytes are collected, or if no data are available for more than 5 seconds.

注解: Tracing data is buffered before it is made available to OpenOCD. If you see "Data timeout!" message, then the target is likely sending not enough data to empty the buffer to OpenOCD before expiration of timeout. Either increase the timeout or use a function `esp_apptrace_flush()` to flush the data on specific intervals.

---

2. Retrieve tracing data indefinitely in non-blocking mode.

```
esp32 apptrace start file://trace.log 1 -1 -1 0 0
```

There is no limitation on the size of collected data and there is no any data timeout set. This process may be stopped by issuing `esp32 apptrace stop` command on OpenOCD telnet prompt, or by pressing Ctrl+C in OpenOCD window.

3. Retrieve tracing data and save them indefinitely.

```
esp32 apptrace start file://trace.log 0 -1 -1 0 0
```

OpenOCD telnet command line prompt will not be available until tracing is stopped. To stop tracing press Ctrl+C in OpenOCD window.

4. Wait for target to be halted. Then resume target's operation and start data retrieval. Stop after collecting 2048 bytes of data:

```
esp32 apptrace start file://trace.log 0 2048 -1 1 0
```

To configure tracing immediately after reset use the openocd `reset halt` command.

Logging to Host

IDF implements useful feature: logging to host via application level tracing library. This is a kind of semihosting when all ESP_LOGx calls sends strings to be printed to the host instead of UART. This can be useful because "printing to host" eliminates some steps performed when logging to UART. The most part of work is done on the host.

By default IDF's logging library uses vprintf-like function to write formatted output to dedicated UART. In general it involves the following steps:

1. Format string is parsed to obtain type of each argument.

2. According to its type every argument is converted to string representation.
3. Format string combined with converted arguments is sent to UART.

Though implementation of vprintf-like function can be optimised to a certain level, all steps above have to be performed in any case and every step takes some time (especially item 3). So it is frequent situation when addition of extra logging to the program to diagnose some problem changes its behaviour and problem disappears or in the worst cases program can not work normally at all and ends up with an error or even hangs.

Possible ways to overcome this problem are to use higher UART bitrates (or another faster interface) and/or move string formatting procedure to the host.

Application level tracing feature can be used to transfer log information to host using `esp_apptrace_vprintf` function. This function does not perform full parsing of the format string and arguments, instead it just calculates number of arguments passed and sends them along with the format string address to the host. On the host log data are processed and printed out by a special Python script.

Limitations

Current implementation of logging over JTAG has some limitations:

1. Tracing from `ESP_EARLY_LOGx` macros is not supported.
2. No support for printf arguments which size exceeds 4 bytes (e.g. `double` and `uint64_t`).
3. Only strings from .rodata section are supported as format strings and arguments.
4. Maximum number of printf arguments is 256.

How To Use It

In order to use logging via trace module user needs to perform the following steps:

1. On target side special vprintf-like function needs to be installed. As it was mentioned earlier this function is `esp_apptrace_vprintf`. It sends log data to the host. Example code is provided in system/app_trace_to_host.
2. Follow instructions in items 2-5 in *Application Specific Tracing*.
3. To print out collected log records, run the following command in terminal: `$IDF_PATH/tools/esp_app_trace/logtrace_proc.py /path/to/trace/file /path/to/program/elf/file`.

Log Trace Processor Command Options

Command usage:

```
logtrace_proc.py [-h] [--no-errors] <trace_file> <elf_file>
```

Positional arguments:

trace_file Path to log trace file

elf_file Path to program ELF file

Optional arguments:

-h, --help show this help message and exit

--no-errors, -n Do not print errors

System Behaviour Analysis with SEGGER SystemView

Another useful IDF feature built on top of application tracing library is the system level tracing which produces traces compatible with SEGGER SystemView tool (see SystemView). SEGGER SystemView is a real-time recording and visualization tool that allows to analyze runtime behavior of an application.

注解: Currently IDF-based application is able to generate SystemView compatible traces in form of files to be opened in SystemView application. The tracing process can not yet be controlled using that tool.

How To Use It

Support for this feature is enabled by *Component config > Application Level Tracing > FreeRTOS SystemView Tracing* (*CONFIG_SYSVIEW_ENABLE*) menuconfig option. There are several other options enabled under the same menu:

1. *ESP32 timer to use as SystemView timestamp source* (*CONFIG_SYSVIEW_TS_SOURCE*) selects the source of timestamps for SystemView events. In single core mode timestamps are generated using ESP32 internal cycle counter running at maximum 240 Mhz (~4 ns granularity). In dual-core mode external timer working at 40Mhz is used, so timestamp granularity is 25 ns.
2. Individually enabled or disabled collection of SystemView events (`CONFIG_SYSVIEW_EVT_XXX`):
   - Trace Buffer Overflow Event
   - ISR Enter Event
   - ISR Exit Event
   - ISR Exit to Scheduler Event
   - Task Start Execution Event
   - Task Stop Execution Event
   - Task Start Ready State Event
   - Task Stop Ready State Event

- Task Create Event
- Task Terminate Event
- System Idle Event
- Timer Enter Event
- Timer Exit Event

IDF has all the code required to produce SystemView compatible traces, so user can just configure necessary project options (see above), build, download the image to target and use OpenOCD to collect data as described in the previous sections.

OpenOCD SystemView Tracing Command Options

Command usage:

```
esp32 sysview [start <options>] | [stop] | [status]
```

Sub-commands:

start Start tracing (continuous streaming).

stop Stop tracing.

status Get tracing status.

Start command syntax:

```
start <outfile1> [outfile2] [poll_period [trace_size [stop_tmo]]]
```

outfile1 Path to file to save data from PRO CPU. This argument should have the following format: `file://path/to/file`.

outfile2 Path to file to save data from APP CPU. This argument should have the following format: `file://path/to/file`.

poll_period Data polling period (in ms) for available trace data. If greater then 0 then command runs in non-blocking mode. By default 1 ms.

trace_size Maximum size of data to collect (in bytes). Tracing is stopped after specified amount of data is received. By default -1 (trace size stop trigger is disabled).

stop_tmo Idle timeout (in sec). Tracing is stopped if there is no data for specified period of time. By default -1 (disable this stop trigger).

注解: If `poll_period` is 0 OpenOCD telnet command line will not be available until tracing is stopped. You must stop it manually by resetting the board or pressing Ctrl+C in OpenOCD window (not one with

the telnet session). Another option is to set `trace_size` and wait until this size of data is collected. At this point tracing stops automatically.

Command usage examples:

1. Collect SystemView tracing data to files "pro-cpu.SVDat" and "pro-cpu.SVDat" . The files will be saved in "openocd-esp32" directory.

   ```
   esp32 sysview start file://pro-cpu.SVDat file://app-cpu.SVDat
   ```

   The tracing data will be retrieved and saved in non-blocking mode. To stop data this process enter `esp32 apptrace stop` command on OpenOCD telnet prompt, Optionally pressing Ctrl+C in OpenOCD window.

2. Retrieve tracing data and save them indefinitely.

   ```
   esp32 sysview start file://pro-cpu.SVDat file://app-cpu.SVDat 0 -1 -1
   ```

   OpenOCD telnet command line prompt will not be available until tracing is stopped. To stop tracing, press Ctrl+C in OpenOCD window.

Data Visualization

After trace data are collected user can use special tool to visualize the results and inspect behaviour of the program. Unfortunately SystemView does not support tracing from multiple cores. So when tracing from ESP32 working in dual-core mode two files are generated: one for PRO CPU and another one for APP CPU. User can load every file into separate instance of the tool.

It is uneasy and awkward to analyze data for every core in separate instance of the tool. Fortunately there is Eclipse plugin called *Impulse* which can load several trace files and makes its possible to inspect events from both cores in one view. Also this plugin has no limitation of 1000000 events as compared to free version of SystemView.

Good instruction on how to install, configure and visualize data in Impulse from one core can be found here.

注解: IDF uses its own mapping for SystemView FreeRTOS events IDs, so user needs to replace original file with mapping `$SYSVIEW_INSTALL_DIR/Description/SYSVIEW_FreeRTOS.txt` with `$IDF_PATH/docs/api-guides/SYSVIEW_FreeRTOS.txt`. Also contents of that IDF specific file should be used when configuring SystemView serializer using above link.

Configure Impulse for Dual Core Traces

After installing Impulse and ensuring that it can successfully load trace files for each core in separate tabs user can add special Multi Adapter port and load both files into one view. To do this user needs to do the following in Eclipse:

1. Open ‘Signal Ports’ view. Go to Windows->Show View->Other menu. Find ‘Signal Ports’ view in Impulse folder and double-click on it.
2. In ‘Signal Ports’ view right-click on ‘Ports’ and select ‘Add …’ ->New Multi Adapter Port
3. In open dialog Press ‘Add’ button and select ‘New Pipe/File’.
4. In open dialog select ‘SystemView Serializer’ as Serializer and set path to PRO CPU trace file. Press OK.
5. Repeat steps 3-4 for APP CPU trace file.
6. Double-click on created port. View for this port should open.
7. Click Start/Stop Streaming button. Data should be loaded.
8. Use ‘Zoom Out’, ‘Zoom In’ and ‘Zoom Fit’ button to inspect data.
9. For settings measurement cursors and other features please see Impulse documentation).

注解: If you have problems with visualization (no data are shown or strange behaviour of zoom action is observed) you can try to delete current signal hierarchy and double click on necessary file or port. Eclipse will ask you to create new signal hierarchy.

5.13 Bootloader

Bootloader performs the following functions:

1. Minimal initial configuration of internal modules;
2. Select the application partition to boot, based on the partition table and ota_data (if any);
3. Load this image to RAM (IRAM & DRAM) and transfer management to it.

Bootloader is located at the address *0x1000* in the flash.

5.13.1 Bootloader compatibility

It is recommended to update to newer *versions of ESP-IDF*: when they are released. The OTA (over the air) update process can flash new apps in the field but cannot flash a new bootloader. For this reason, the bootloader supports booting apps built from newer versions of ESP-IDF.

The bootloader does not support booting apps from older versions of ESP-IDF. When updating ESP-IDF manually on an existing product that might need to downgrade the app to an older version, keep using the older ESP-IDF bootloader binary as well.

注解: If testing an OTA update for an existing product in production, always test it using the same ESP-IDF bootloader binary that is deployed in production.

Before ESP-IDF V2.1

Bootloaders built from very old versions of ESP-IDF (before ESP-IDF V2.1) perform less hardware configuration than newer versions. When using a bootloader from these early ESP-IDF versions and building a new app, enable the config option *CONFIG_COMPATIBLE_PRE_V2_1_BOOTLOADERS*.

Before ESP-IDF V3.1

Bootloaders built from versions of ESP-IDF before V3.1 do not support MD5 checksums in the partition table binary. When using a bootloader from these ESP-IDF versions and building a new app, enable the config option *CONFIG_ESP32_COMPATIBLE_PRE_V3_1_BOOTLOADERS*.

SPI Flash Configuration

Each ESP-IDF application or bootloader .bin file contains a header with *CONFIG_FLASHMODE*, *CONFIG_ESPTOOLPY_FLASHFREQ*, *CONFIG_ESPTOOLPY_FLASHSIZE* embedded in it. These are used to configure the SPI flash during boot.

The :first stage bootloader in ROM reads the second stage bootloader header from flash and uses these settings to load it. However, at this time the system clock speed is lower than configured and not all flash modes are supported. When the second stage bootloader then runs and re-configures the flash, it reads values from the currently selected app binary header not the bootloader header. This allows an OTA update to change the SPI flash settings in use.

Bootloaders prior to ESP-IDF V4.0 used the bootloader' s own header to configure the SPI flash, meaning these values could not be changed in an update. To maintain compatibility with older bootloaders, the app re-initializes the flash settings during app startup using the configuration found in the app header.

5.13.2 FACTORY reset

The user can write a basic working firmware and load it into the factory partition. Next, update the firmware via OTA (over the air). The updated firmware will be loaded into an OTA app partition slot and the OTA data partition is updated to boot from this partition. If you want to be able to roll back to the factory

firmware and clear the settings, then you need to set *CONFIG_BOOTLOADER_FACTORY_RESET*. The factory reset mechanism allows to reset the device to factory settings:

- Clear one or more data partitions.
- Boot from "factory" partition.

CONFIG_BOOTLOADER_DATA_FACTORY_RESET allows customers to select which data partitions will be erased when the factory reset is executed. Can specify the names of partitions through comma-delimited with optional spaces for readability. (Like this: "nvs, phy_init, nvs_custom, ···"). Make sure that the name specified in the partition table and here are the same. Partitions of type "app" cannot be specified here.

CONFIG_BOOTLOADER_OTA_DATA_ERASE - the device will boot from "factory" partition after a factory reset. The OTA data partition will be cleared.

CONFIG_BOOTLOADER_NUM_PIN_FACTORY_RESET- number of the GPIO input for factory reset uses to trigger a factory reset, this GPIO must be pulled low on reset to trigger this.

CONFIG_BOOTLOADER_HOLD_TIME_GPIO- this is hold time of GPIO for reset/test mode (by default 5 seconds). The GPIO must be held low continuously for this period of time after reset before a factory reset or test partition boot (as applicable) is performed.

Partition table.:

```
# Name,   Type, SubType, Offset,   Size, Flags
# Note: if you change the phy_init or app partition offset, make sure to change the␣
↪offset in Kconfig.projbuild
nvs,      data, nvs,     0x9000,   0x4000
otadata,  data, ota,     0xd000,   0x2000
phy_init, data, phy,     0xf000,   0x1000
factory,  0,    0,       0x10000,  1M
test,     0,    test,    ,         512K
ota_0,    0,    ota_0,   ,         512K
ota_1,    0,    ota_1,   ,         512K
```

5.13.3 Boot from TEST firmware

The user can write a special firmware for testing in production, and run it as needed. The partition table also needs a dedicated partition for this testing firmware (See *partition table*). To trigger a test app you need to set *CONFIG_BOOTLOADER_APP_TEST*.

CONFIG_BOOTLOADER_NUM_PIN_APP_TEST - GPIO number to boot TEST partition. The selected GPIO will be configured as an input with internal pull-up enabled. To trigger a test app, this GPIO must be pulled low on reset. After the GPIO input is deactivated and the device reboots, the normally configured application will boot (factory or any OTA slot).

CONFIG_BOOTLOADER_HOLD_TIME_GPIO - this is hold time of GPIO for reset/test mode (by default 5 seconds). The GPIO must be held low continuously for this period of time after reset before a factory reset or test partition boot (as applicable) is performed.

5.13.4 Customer bootloader

The current bootloader implementation allows the customer to override it. To do this, you must copy the folder */esp-idf/components/bootloader* and then edit */your_project/components/bootloader/subproject/main/bootloader_main.c*. In the bootloader space, you can not use the drivers and functions from other components. If necessary, then the required functionality should be placed in the folder bootloader (note that this will increase its size). It is necessary to monitor its size because there can be overlays in memory with a partition table leading to damage. At the moment the bootloader is limited to the partition table from the address *0x8000*.

5.14 分区表

[English]

5.14.1 概述

每片 ESP32 的 flash 可以包含多个应用程序，以及多种不同类型的数据（例如校准数据、文件系统数据、参数存储器数据等）。因此，我们需要引入分区表的概念。

具体来说，ESP32 在 flash 的默认偏移地址 0x8000 处烧写一张分区表。该分区表的长度为 0xC00 字节（最多可以保存 95 条分区表条目）。分区表数据后还保存着该表的 MD5 校验和，用于验证分区表的完整性。此外，如果芯片使能了安全启动 功能，则该分区表后还会保存签名信息。

分区表中的每个条目都包括以下几个部分：Name（标签）、Type（app、data 等）、SubType 以及在 flash 中的偏移量（分区的加载地址）。

在使用分区表时，最简单的方法就是用 *make menuconfig* 选择一张预定义的分区表：

- “Single factory app, no OTA”
- “Factory app, two OTA definitions”

在以上两种选项中，出厂应用程序均将被烧录至 flash 的 0x10000 偏移地址处。这时，运行 *make partition_table* ，即可以打印当前使用分区表的信息摘要。

5.14.2 内置分区表

以下是 “Single factory app, no OTA” 选项的分区表信息摘要：

```
# Espressif ESP32 Partition Table
# Name, Type, SubType, Offset, Size, Flags
nvs, data, nvs, 0x9000, 0x6000,
phy_init, data, phy, 0xf000, 0x1000,
factory, app, factory, 0x10000, 1M,
```

- flash 的 0x10000 (64KB) 偏移地址处存放一个标记为 “factory” 的二进制应用程序，且 Bootloader 将默认加载这个应用程序。
- 分区表中还定义了两个数据区域，分别用于存储 NVS 库专用分区和 PHY 初始化数据。

以下是 “Factory app, two OTA definitions” 选项的分区表信息摘要：

```
# Espressif ESP32 Partition Table
# Name, Type, SubType, Offset, Size, Flags
nvs, data, nvs, 0x9000, 0x4000,
otadata, data, ota, 0xd000, 0x2000,
phy_init, data, phy, 0xf000, 0x1000,
factory, app, factory, 0x10000, 1M,
ota_0, app, ota_0, 0x110000, 1M,
ota_1, app, ota_1, 0x210000, 1M,
```

- 分区表中定义了三个应用程序分区，这三个分区的类型都被设置为 “app”，但具体 app 类型不同。其中，位于 0x10000 偏移地址处的为出厂应用程序（factory），其余两个为 OTA 应用程序（ota_0，ota_1）。
- 新增了一个名为 “otadata” 的数据分区，用于保存 OTA 升级时候需要的数据。Bootloader 会查询该分区的数据，以判断该从哪个 OTA 应用程序分区加载程序。如果 “otadata” 分区为空，则会执行出厂程序。

5.14.3 创建自定义分区表

如果在 `menuconfig` 中选择了 “Custom partition table CSV”，则还需要输入该分区表的 CSV 文件在项目中的路径。CSV 文件可以根据需要，描述任意数量的分区信息。

CSV 文件的格式与上面摘要中打印的格式相同，但是在 CSV 文件中并非所有字段都是必需的。例如下面是一个自定义的 OTA 分区表的 CSV 文件：

```
# Name, Type, SubType, Offset, Size, Flags
nvs, data, nvs, 0x9000, 0x4000
otadata, data, ota, 0xd000, 0x2000
phy_init, data, phy, 0xf000, 0x1000
factory, app, factory, 0x10000, 1M
ota_0, app, ota_0, , 1M
ota_1, app, ota_1, , 1M
nvs_key, data, nvs_keys, , 0x1000
```

- 字段之间的空格会被忽略，任何以 `#` 开头的行（注释）也会被忽略。
- CSV 文件中的每个非注释行均为一个分区定义。
- 每个分区的 `Offset` 字段可以为空，`gen_esp32part.py` 工具会从分区表位置的后面开始自动计算并填充该分区的偏移地址，同时确保每个分区的偏移地址正确对齐。

Name 字段

Name 字段可以是任何有意义的名称，但不能超过 16 个字符（之后的内容将被截断）。该字段对 ESP32 并不是特别重要。

Type 字段

Type 字段可以指定为 app (0) 或者 data (1)，也可以直接使用数字 0-254（或者十六进制 0x00-0xFE）。注意，0x00-0x3F 不得使用（预留给 esp-idf 的核心功能）。

如果您的应用程序需要保存数据，请在 0x40-0xFE 内添加一个自定义分区类型。

注意，bootloader 将忽略 app (0) 和 data (1) 以外的其他分区类型。

SubType 字段

SubType 字段长度为 8 bit，内容与具体 Type 有关。目前，esp-idf 仅仅规定了 “app” 和 “data” 两种子类型。

- 当 Type 定义为 `app` 时，SubType 字段可以指定为 factory (0)，ota_0 (0x10) …ota_15 (0x1F) 或者 test (0x20)。
  - factory (0) 是默认的 app 分区。Bootloader 将默认加在该应用程序。但如果存在类型为 data/ota 分区，则 Bootloader 将加载 data/ota 分区中的数据，进而判断启动哪个 OTA 镜像文件。- OTA 升级永远都不会更新 factory 分区中的内容。- 如果您希望在 OTA 项目中预留更多 flash，可以删除 factory 分区，转而使用 ota_0 分区。
  - ota_0 (0x10) …ota_15 (0x1F) 为 OTA 应用程序分区，Bootloader 将根据 OTA 数据分区中的数据来决定加载哪个 OTA 应用程序分区中的程序。在使用 OTA 功能时，应用程序应至少拥有 2 个 OTA 应用程序分区（ota_0 和 ota_1）。更多详细信息，请参考*OTA 文档* 。
  - test (0x2) 为预留 app 子类型，用于工厂测试过程。注意，目前，esp-idf 并不支持这种子类型。
- 当 Type 定义为 `data` 时，SubType 字段可以指定为 ota (0)，phy (1)，nvs (2) 或者 nvs_keys (4)。
  - ota (0) 即*OTA 数据分区* ，用于存储当前所选的 OTA 应用程序的信息。这个分区的大小需要设定为 0x2000。更多详细信息，请参考*OTA 文档* 。
  - phy (1) 分区用于存放 PHY 初始化数据，从而保证可以为每个设备单独配置 PHY，而非必须采用固件中的统一 PHY 初始化数据。
    * 默认配置下，phy 分区并不启用，而是直接将 phy 初始化数据编译至应用程序中，从而节省分区表空间（直接将此分区删掉）。
    * 如果需要从此分区加载 phy 初始化数据，请运行 `make menuconfig`，并且使能*CONFIG_ESP32_PHY_INIT_DATA_IN_PARTITION* 选项。此时，您还需要手动将 phy 初始化数据烧至设备 flash（esp-idf 编译系统并不会自动完成该操作）。
  - nvs (2) 是专门给*非易失性存储 (NVS) API* 使用的分区。
    * 用于存储每台设备的 PHY 校准数据（注意，并不是 PHY 初始化数据）。
    * 用于存储 Wi-Fi 数据（如果使用了*esp_wifi_set_storage(WIFI_STORAGE_FLASH)* 初始化函数）。
    * NVS API 还可以用于其他应用程序数据。

    * 强烈建议您应为 NVS 分区分配至少 0x3000 字节空间。
    * 如果使用 NVS API 存储大量数据，请增加 NVS 分区的大小（默认是 0x6000 字节）。
  - nvs_keys (4) 是 NVS 秘钥分区。详细信息，请参考*非易失性存储 (NVS) API* 文档。
    * 用于存储加密密钥（如果启用了 *NVS 加密功能*）。
    * 此分区应至少设定为 4096 字节。

其它数据子类型已预留给 esp-idf 的未来使用。

Offset 和 Size 字段

分区若为指定偏移地址，则会紧跟着前一个分区之后开始。若此分区为首个分区，则将紧跟着分区表开始。

app 分区的偏移地址必须要与 0x10000 (64K) 对齐，如果将偏移字段留空，`gen_esp32part.py` 工具会自动计算得到一个满足对齐要求的偏移地址。如果 app 分区的偏移地址没有与 0x10000 (64K) 对齐，则该工具会报错。

app 分区的大小和偏移地址可以采用十进制数、以 0x 为前缀的十六进制数，且支持 K 或 M 的倍数单位（分别代表 1024 和 1024*1024 字节）。

如果您希望允许分区表中的分区采用任意起始偏移量 (*CONFIG_PARTITION_TABLE_OFFSET*)，请将分区表（CSV 文件）中所有分区的偏移字段都留空。注意，此时，如果您更改了分区表中任意分区的偏移地址，则其他分区的偏移地址也会跟着改变。这种情况下，如果您之前还曾设定某个分区采用固定偏移地址，则可能造成分区表冲突，从而导致报错。

Flags 字段

当前仅支持 `encrypted` 标记。如果 Flags 字段设置为 `encrypted`，且已启用*Flash Encryption* 功能，则该分区将会被加密。

注解： app 分区始终会被加密，不管 Flags 字段是否设置。

5.14.4 生成二进制分区表

烧写到 ESP32 中的分区表采用二进制格式，而不是 CSV 文件本身。此时，partition_table/gen_esp32part.py 工具可以实现 CSV 和二进制文件之间的转换。

如果您在 `make menuconfig` 指定了分区表 CSV 文件的名称，然后执行 `make partition_table`。这时，转换将在编译过程中自动完成。

手动将 CSV 文件转换为二进制文件:

```
python gen_esp32part.py input_partitions.csv binary_partitions.bin
```

手动将二进制文件转换为 CSV 文件:

```
python gen_esp32part.py binary_partitions.bin input_partitions.csv
```

在标准输出（stdout）上，打印二进制分区表的内容（在运行 `make partition_table` 时，我们正是这样打印上文展示的信息摘要的）：

```
python gen_esp32part.py binary_partitions.bin
```

MD5 校验和

二进制格式的分区表中含有一个 MD5 校验和。这个 MD5 校验和是根据分区表内容计算的，可在设备启动阶段，用于验证分区表的完整性。

注意，一些版本较老的 bootloader 无法支持 MD5 校验，如果发现 MD5 校验和则将报错 `invalid magic number 0xebeb`。此时，用户可通过 `gen_esp32part.py` 的 `--disable-md5sum` 选项或者 `menuconfig` 的*CONFIG_PARTITION_TABLE_MD5* 选项关闭 MD5 校验。

5.14.5 烧写分区表

- `make partition_table-flash`： 使用 esptool.py 工具烧写分区表。
- `make flash`： 会烧写所有内容，包括分区表。

在执行 `make partition_table` 命令时，手动烧写分区表的命令也将打印在终端上。

注解: 分区表的更新并不会擦除根据之前分区表存储的数据。此时，您可以使用 `make erase_flash` 命令或者 `esptool.py erase_flash` 命令来擦除 flash 中的所有内容。

5.15 Secure Boot

Secure Boot is a feature for ensuring only your code can run on the chip. Data loaded from flash is verified on each reset.

Secure Boot is separate from the *Flash Encryption* feature, and you can use secure boot without encrypting the flash contents. However, for a secure environment both should be used simultaneously. See *Secure Boot & Flash Encryption* for more details.

重要: Enabling secure boot limits your options for further updates of your ESP32. Make sure to read this document throughly and understand the implications of enabling secure boot.

注解: Secure boot is only supported when using the default GNU Make build system. The CMake build system preview in ESP-IDF v3.x does not support secure boot.

5.15.1 Background

- Most data is stored in flash. Flash access does not need to be protected from physical access in order for secure boot to function, because critical data is stored (non-software-accessible) in Efuses internal to the chip.
- Efuses are used to store the secure bootloader key (in efuse BLOCK2), and also a single Efuse bit (ABS_DONE_0) is burned (written to 1) to permanently enable secure boot on the chip. For more details about efuse, see Chapter 11 "eFuse Controller" in the Technical Reference Manual.
- To understand the secure boot process, first familiarise yourself with the standard *ESP-IDF boot process*.
- Both stages of the boot process (initial software bootloader load, and subsequent partition & app loading) are verified by the secure boot process, in a "chain of trust" relationship.

5.15.2 Secure Boot Process Overview

This is a high level overview of the secure boot process. Step by step instructions are supplied under *How To Enable Secure Boot*. Further in-depth details are supplied under *Technical Details*:

1. The options to enable secure boot are provided in the `make menuconfig` hierarchy, under "Secure Boot Configuration".
2. Secure Boot defaults to signing images and partition table data during the build process. The "Secure boot private signing key" config item is a file path to a ECDSA public/private key pair in a PEM format file.
3. The software bootloader image is built by esp-idf with secure boot support enabled and the public key (signature verification) portion of the secure boot signing key compiled in. This software bootloader image is flashed at offset 0x1000.
4. On first boot, the software bootloader follows the following process to enable secure boot:
   - Hardware secure boot support generates a device secure bootloader key (generated via hardware RNG, then stored read/write protected in efuse), and a secure digest. The digest is derived from the key, an IV, and the bootloader image contents.
   - The secure digest is flashed at offset 0x0 in the flash.
   - Depending on Secure Boot Configuration, efuses are burned to disable JTAG and the ROM BASIC interpreter (it is strongly recommended these options are turned on.)

- Bootloader permanently enables secure boot by burning the ABS_DONE_0 efuse. The software bootloader then becomes protected (the chip will only boot a bootloader image if the digest matches.)

5. On subsequent boots the ROM bootloader sees that the secure boot efuse is burned, reads the saved digest at 0x0 and uses hardware secure boot support to compare it with a newly calculated digest. If the digest does not match then booting will not continue. The digest and comparison are performed entirely by hardware, and the calculated digest is not readable by software. For technical details see *Secure Boot Hardware Support*.
6. When running in secure boot mode, the software bootloader uses the secure boot signing key (the public key of which is embedded in the bootloader itself, and therefore validated as part of the bootloader) to verify the signature appended to all subsequent partition tables and app images before they are booted.

5.15.3 Keys

The following keys are used by the secure boot process:

- "secure bootloader key" is a 256-bit AES key that is stored in Efuse block 2. The bootloader can generate this key itself from the internal hardware random number generator, the user does not need to supply it (it is optionally possible to supply this key, see *Re-Flashable Software Bootloader*). The Efuse holding this key is read & write protected (preventing software access) before secure boot is enabled.
  - By default, the Efuse Block 2 Coding Scheme is "None" and a 256 bit key is stored in this block. On some ESP32s, the Coding Scheme is set to 3/4 Encoding (CODING_SCHEME efuse has value 1) and a 192 bit key must be stored in this block. See ESP32 Technical Reference Manual section 20.3.1.3 *System Parameter coding_scheme* for more details. The algorithm operates on a 256 bit key in all cases, 192 bit keys are extended by repeating some bits (*details*).
- "secure boot signing key" is a standard ECDSA public/private key pair (see *Image Signing Algorithm*) in PEM format.
  - The public key from this key pair (for signature verification but not signature creation) is compiled into the software bootloader and used to verify the second stage of booting (partition table, app image) before booting continues. The public key can be freely distributed, it does not need to be kept secret.
  - The private key from this key pair *must be securely kept private*, as anyone who has this key can authenticate to any bootloader that is configured with secure boot and the matching public key.

5.15.4 Bootloader Size

When secure boot is enabled the bootloader app binary `bootloader.bin` may exceed the default bootloader size limit. This is especially likely if flash encryption is enabled as well. The default size limit is 0x7000 (28672) bytes (partition table offset 0x8000 - bootloader offset 0x1000).

If the bootloader becomes too large, the ESP32 will fail to boot - errors will be logged about either invalid partition table or invalid bootloader checksum.

Options to work around this are:

- Reduce *bootloader log level*. Setting log level to Warning, Error or None all significantly reduce the final binary size (but may make it harder to debug).
- Set *partition table offset* to a higher value than 0x8000, to place the partition table later in the flash. This increases the space available for the bootloader. If the *partition table* CSV file contains explicit partition offsets, they will need changing so no partition has an offset lower than `CONFIG_PARTITION_TABLE_OFFSET + 0x1000`. (This includes the default partition CSV files supplied with ESP-IDF.)

5.15.5 How To Enable Secure Boot

1. Run `make menuconfig`, navigate to "Secure Boot Configuration" and select the option "One-time Flash". (To understand the alternative "Reflashable" choice, see *Re-Flashable Software Bootloader*.)
2. Select a name for the secure boot signing key. This option will appear after secure boot is enabled. The file can be anywhere on your system. A relative path will be evaluated from the project directory. The file does not need to exist yet.
3. Set other menuconfig options (as desired). Pay particular attention to the "Bootloader Config" options, as you can only flash the bootloader once. Then exit menuconfig and save your configuration
4. The first time you run `make`, if the signing key is not found then an error message will be printed with a command to generate a signing key via `espsecure.py generate_signing_key`.

重要: A signing key generated this way will use the best random number source available to the OS and its Python installation (*/dev/urandom* on OSX/Linux and *CryptGenRandom()* on Windows). If this random number source is weak, then the private key will be weak.

重要: For production environments, we recommend generating the keypair using openssl or another industry standard encryption program. See *Generating Secure Boot Signing Key* for more details.

---

5. Run `make bootloader` to build a secure boot enabled bootloader. The output of `make` will include a prompt for a flashing command, using `esptool.py write_flash`.

6. When you' re ready to flash the bootloader, run the specified command (you have to enter it yourself, this step is not performed by make) and then wait for flashing to complete. **Remember this is a one time flash, you can' t change the bootloader after this!**.

7. Run `make flash` to build and flash the partition table and the just-built app image. The app image will be signed using the signing key you generated in step 4.

注解: `make flash` doesn' t flash the bootloader if secure boot is enabled.

---

8. Reset the ESP32 and it will boot the software bootloader you flashed. The software bootloader will enable secure boot on the chip, and then it verifies the app image signature and boots the app. You should watch the serial console output from the ESP32 to verify that secure boot is enabled and no errors have occurred due to the build configuration.

注解: Secure boot won' t be enabled until after a valid partition table and app image have been flashed. This is to prevent accidents before the system is fully configured.

注解: If the ESP32 is reset or powered down during the first boot, it will start the process again on the next boot.

---

9. On subsequent boots, the secure boot hardware will verify the software bootloader has not changed (using the secure bootloader key) and then the software bootloader will verify the signed partition table and app image (using the public key portion of the secure boot signing key).

5.15.6 Re-Flashable Software Bootloader

Configuration "Secure Boot: One-Time Flash" is the recommended configuration for production devices. In this mode, each device gets a unique key that is never stored outside the device.

However, an alternative mode *Secure Boot: Reflashable* is also available. This mode allows you to supply a binary key file that is used for the secure bootloader key. As you have the key file, you can generate new bootloader images and secure boot digests for them.

In the esp-idf build process, this 256-bit key file is derived from the app signing key generated during the generate_signing_key step above. The private key' s SHA-256 digest is used as the secure bootloader key (as-is for Coding Scheme None, or truncate to 192 bytes for 3/4 Encoding). This is a convenience so you only need to generate/protect a single private key.

注解: Although it' s possible, we strongly recommend not generating one secure boot key and flashing it to every device in a production environment. The "One-Time Flash" option is recommended for production

environments.

To enable a reflashable bootloader:

1. In the `make menuconfig` step, select "Bootloader Config"-> *CONFIG_SECURE_BOOT_ENABLED* -> *CONFIG_SECURE_BOOTLOADER_MODE* -> Reflashable.
2. If necessary, set the *CONFIG_SECURE_BOOTLOADER_KEY_ENCODING* based on the coding scheme used by the device. The coding scheme is shown in the `Features` line when `esptool.py` connects to the chip, or in the `espefuse.py summary` output.
2. Follow the steps shown above to choose a signing key file, and generate the key file.
3. Run `make bootloader`. A binary key file will be created, derived from the private key that is used for signing. Two sets of flashing steps will be printed - the first set of steps includes an `espefuse.py burn_key` command which is used to write the bootloader key to efuse. (Flashing this key is a one-time-only process.) The second set of steps can be used to reflash the bootloader with a pre-calculated digest (generated during the build process).
4. Resume from *Step 6 of the one-time flashing process*, to flash the bootloader and enable secure boot. Watch the console log output closely to ensure there were no errors in the secure boot configuration.

5.15.7 Generating Secure Boot Signing Key

The build system will prompt you with a command to generate a new signing key via `espsecure.py generate_signing_key`. This uses the python-ecdsa library, which in turn uses Python's os.urandom() as a random number source.

The strength of the signing key is proportional to (a) the random number source of the system, and (b) the correctness of the algorithm used. For production devices, we recommend generating signing keys from a system with a quality entropy source, and using the best available EC key generation utilities.

For example, to generate a signing key using the openssl command line:

```
` openssl ecparam -name prime256v1 -genkey -noout -out my_secure_boot_signing_key.pem `
```

Remember that the strength of the secure boot system depends on keeping the signing key private.

5.15.8 Remote Signing of Images

For production builds, it can be good practice to use a remote signing server rather than have the signing key on the build machine (which is the default esp-idf secure boot configuration). The espsecure.py command line program can be used to sign app images & partition table data for secure boot, on a remote system.

To use remote signing, disable the option "Sign binaries during build". The private signing key does not need to be present on the build system. However, the public (signature verification) key is required because it is compiled into the bootloader (and can be used to verify image signatures during OTA updates.

To extract the public key from the private key:

```
espsecure.py extract_public_key --keyfile PRIVATE_SIGNING_KEY PUBLIC_VERIFICATION_KEY
```

The path to the public signature verification key needs to be specified in the menuconfig under "Secure boot public signature verification key" in order to build the secure bootloader.

After the app image and partition table are built, the build system will print signing steps using espsecure.py:

```
espsecure.py sign_data --keyfile PRIVATE_SIGNING_KEY BINARY_FILE
```

The above command appends the image signature to the existing binary. You can use the *–output* argument to write the signed binary to a separate file:

```
espsecure.py sign_data --keyfile PRIVATE_SIGNING_KEY --output SIGNED_BINARY_FILE BINARY_
↪FILE
```

5.15.9 Secure Boot Best Practices

- Generate the signing key on a system with a quality source of entropy.
- Keep the signing key private at all times. A leak of this key will compromise the secure boot system.
- Do not allow any third party to observe any aspects of the key generation or signing process using espsecure.py. Both processes are vulnerable to timing or other side-channel attacks.
- Enable all secure boot options in the Secure Boot Configuration. These include flash encryption, disabling of JTAG, disabling BASIC ROM interpeter, and disabling the UART bootloader encrypted flash access.
- Use secure boot in combination with *flash encryption* to prevent local readout of the flash contents.

5.15.10 Technical Details

The following sections contain low-level reference descriptions of various secure boot elements:

Secure Boot Hardware Support

The first stage of secure boot verification (checking the software bootloader) is done via hardware. The ESP32' s Secure Boot support hardware can perform three basic operations:

1. Generate a random sequence of bytes from a hardware random number generator.
2. Generate a digest from data (usually the bootloader image from flash) using a key stored in Efuse block 2. The key in Efuse can (& should) be read/write protected, which prevents software access. For

full details of this algorithm see *Secure Bootloader Digest Algorithm*. The digest can only be read back by software if Efuse ABS_DONE_0 is *not* burned (ie still 0).

3. Generate a digest from data (usually the bootloader image from flash) using the same algorithm as step 2 and compare it to a pre-calculated digest supplied in a buffer (usually read from flash offset 0x0). The hardware returns a true/false comparison without making the digest available to software. This function is available even when Efuse ABS_DONE_0 is burned.

Secure Bootloader Digest Algorithm

Starting with an "image" of binary data as input, this algorithm generates a digest as output. The digest is sometimes referred to as an "abstract" in hardware documentation.

For a Python version of this algorithm, see the `espsecure.py` tool in the components/esptool_py directory (specifically, the `digest_secure_bootloader` command).

Items marked with (^) are to fulfill hardware restrictions, as opposed to cryptographic restrictions.

1. Read the AES key from efuse block 2, in reversed byte order. If Coding Scheme is set to 3/4 Encoding, extend the 192 bit key to 256 bits using the same algorithm described in *Flash Encryption Algorithm*.
2. Prefix the image with a 128 byte randomly generated IV.
3. If the image length is not modulo 128, pad the image to a 128 byte boundary with 0xFF. (^)
4. For each 16 byte plaintext block of the input image: - Reverse the byte order of the plaintext input block (^) - Apply AES256 in ECB mode to the plaintext block. - Reverse the byte order of the ciphertext output block. (^) - Append to the overall ciphertext output.
5. Byte-swap each 4 byte word of the ciphertext (^)
6. Calculate SHA-512 of the ciphertext.

Output digest is 192 bytes of data: The 128 byte IV, followed by the 64 byte SHA-512 digest.

Image Signing Algorithm

Deterministic ECDSA as specified by RFC 6979.

- Curve is NIST256p (openssl calls this curve "prime256v1", it is also sometimes called secp256r1).
- Hash function is SHA256.
- Key format used for storage is PEM.
  - In the bootloader, the public key (for signature verification) is flashed as 64 raw bytes.
- Image signature is 68 bytes - a 4 byte version word (currently zero), followed by a 64 bytes of signature data. These 68 bytes are appended to an app image or partition table data.

Manual Commands

Secure boot is integrated into the esp-idf build system, so `make` will automatically sign an app image if secure boot is enabled. `make bootloader` will produce a bootloader digest if menuconfig is configured for it.

However, it is possible to use the `espsecure.py` tool to make standalone signatures and digests.

To sign a binary image:

```
espsecure.py sign_data --keyfile ./my_signing_key.pem --output ./image_signed.bin image-
↪unsigned.bin
```

Keyfile is the PEM file containing an ECDSA private signing key.

To generate a bootloader digest:

```
espsecure.py digest_secure_bootloader --keyfile ./securebootkey.bin --output ./
↪bootloader-digest.bin build/bootloader/bootloader.bin
```

Keyfile is the 32 byte raw secure boot key for the device.

The output of the `espsecure.py digest_secure_bootloader` command is a single file which contains both the digest and the bootloader appended to it. To flash the combined digest plus bootloader to the device:

```
esptool.py write_flash 0x0 bootloader-digest.bin
```

5.15.11 Secure Boot & Flash Encryption

If secure boot is used without *Flash Encryption*, it is possible to launch "time-of-check to time-of-use" attack, where flash contents are swapped after the image is verified and running. Therefore, it is recommended to use both the features together.

5.15.12 Signed App Verification Without Hardware Secure Boot

The integrity of apps can be checked even without enabling the hardware secure boot option. This option uses the same app signature scheme as hardware secure boot, but unlike hardware secure boot it does not prevent the bootloader from being physically updated. This means that the device can be secured against remote network access, but not physical access. Compared to using hardware Secure Boot this option is much simpler to implement. See *How To Enable Signed App Verification* for step by step instructions.

An app can be verified on update and, optionally, be verified on boot.

- Verification on update: When enabled, the signature is automatically checked whenever the esp_ota_ops.h APIs are used for OTA updates. If hardware secure boot is enabled, this option is always enabled and cannot be disabled. If hardware secure boot is not enabled, this option still adds significant security against network-based attackers by preventing spoofing of OTA updates.

- Verification on boot: When enabled, the bootloader will be compiled with code to verify that an app is signed before booting it. If hardware secure boot is enabled, this option is always enabled and cannot be disabled. If hardware secure boot is not enabled, this option doesn't add significant security by itself so most users will want to leave it disabled.

How To Enable Signed App Verification

1. Run `make menuconfig` -> Security features -> Enable "Require signed app images"
2. "Bootloader verifies app signatures" can be enabled, which verifies app on boot.
3. By default, "Sign binaries during build" will be enabled on selecting "Require signed app images" option, which will sign binary files as a part of build process. The file named in "Secure boot private signing key" will be used to sign the image.
4. If you disable "Sign binaries during build" option then you'll have to enter path of a public key file used to verify signed images in "Secure boot public signature verification key". In this case, private signing key should be generated by following instructions in *Generating Secure Boot Signing Key*; public verification key and signed image should be generated by following instructions in *Remote Signing of Images*.

5.15.13 Advanced Features

JTAG Debugging

By default, when Secure Boot is enabled then JTAG debugging is disabled via eFuse. The bootloader does this on first boot, at the same time it enables Secure Boot.

See *JTAG with Flash Encryption or Secure Boot* for more information about using JTAG Debugging with either Secure Boot or signed app verification enabled.

5.16 ULP coprocessor programming

5.16.1 ULP coprocessor instruction set

This document provides details about the instructions used by ESP32 ULP coprocessor assembler.

ULP coprocessor has 4 16-bit general purpose registers, labeled R0, R1, R2, R3. It also has an 8-bit counter register (stage_cnt) which can be used to implement loops. Stage count regiter is accessed using special instructions.

ULP coprocessor can access 8k bytes of RTC_SLOW_MEM memory region. Memory is addressed in 32-bit word units. It can also access peripheral registers in RTC_CNTL, RTC_IO, and SENS peripherals.

All instructions are 32-bit. Jump instructions, ALU instructions, peripheral register and memory access instructions are executed in 1 cycle. Instructions which work with peripherals (TSENS, ADC, I2C) take variable number of cycles, depending on peripheral operation.

The instruction syntax is case insensitive. Upper and lower case letters can be used and intermixed arbitrarily. This is true both for register names and instruction names.

Note about addressing

ESP32 ULP coprocessor' s JUMP, ST, LD instructions which take register as an argument (jump address, store/load base address) expect the argument to be expressed in 32-bit words.

Consider the following example program:

```
entry:
        NOP
        NOP
        NOP
        NOP
loop:
        MOVE R1, loop
        JUMP R1
```

When this program is assembled and linked, address of label `loop` will be equal to 16 (expressed in bytes). However *JUMP* instruction expects the address stored in register to be expressed in 32-bit words. To account for this common use case, assembler will convert the address of label *loop* from bytes to words, when generating `MOVE` instruction, so the code generated code will be equivalent to:

```
0000    NOP
0004    NOP
0008    NOP
000c    NOP
0010    MOVE R1, 4
0014    JUMP R1
```

The other case is when the argument of `MOVE` instruction is not a label but a constant. In this case assembler will use the value as is, without any conversion:

```
.set        val, 0x10
MOVE        R1, val
```

In this case, value loaded into R1 will be `0x10`.

Similar considerations apply to `LD` and `ST` instructions. Consider the following code:

```
        .global array
array:  .long 0
        .long 0
        .long 0
        .long 0

        MOVE R1, array
        MOVE R2, 0x1234
        ST R2, R1, 0      // write value of R2 into the first array element,
                          // i.e. array[0]

        ST R2, R1, 4      // write value of R2 into the second array element
                          // (4 byte offset), i.e. array[1]

        ADD R1, R1, 2     // this increments address by 2 words (8 bytes)
        ST R2, R1, 0      // write value of R2 into the third array element,
                          // i.e. array[2]
```

Note about instruction execution time

ULP coprocessor is clocked from RTC_FAST_CLK, which is normally derived from the internal 8MHz oscillator. Applications which need to know exact ULP clock frequency can calibrate it against the main XTAL clock:

```
#include "soc/rtc.h"

// calibrate 8M/256 clock against XTAL, get 8M/256 clock period
uint32_t rtc_8md256_period = rtc_clk_cal(RTC_CAL_8MD256, 100);
uint32_t rtc_fast_freq_hz = 1000000ULL * (1 << RTC_CLK_CAL_FRACT) * 256 / rtc_8md256_
↪period;
```

ULP coprocessor needs certain number of clock cycles to fetch each instuction, plus certain number of cycles to execute it, depending on the instruction. See description of each instruction below for details on the execution time.

Instruction fetch time is:

- 2 clock cycles —for instructions following ALU and branch instructions.
- 4 clock cycles —in other cases.

Note that when accessing RTC memories and RTC registers, ULP coprocessor has lower priority than the main CPUs. This means that ULP coprocessor execution may be suspended while the main CPUs access

same memory region as the ULP.

NOP - no operation

Syntax **NOP**

Operands None

Cycles 2 cycle to execute, 4 cycles to fetch next instruction

Description No operation is performed. Only the PC is incremented.

Example:

```
1:    NOP
```

ADD - Add to register

Syntax **ADD** *Rdst, Rsrc1, Rsrc2*

ADD *Rdst, Rsrc1, imm*

Operands

- *Rdst* - Register R[0..3]
- *Rsrc1* - Register R[0..3]
- *Rsrc2* - Register R[0..3]
- *Imm* - 16-bit signed value

Cycles 2 cycles to execute, 4 cycles to fetch next instruction

Description The instruction adds source register to another source register or to a 16-bit signed value and stores result to the destination register.

Examples:

```
1:    ADD R1, R2, R3        //R1 = R2 + R3

2:    Add R1, R2, 0x1234    //R1 = R2 + 0x1234

3:    .set value1, 0x03     //constant value1=0x03
      Add R1, R2, value1    //R1 = R2 + value1


4:    .global label         //declaration of variable label
      Add R1, R2, label     //R1 = R2 + label
```

(下页继续)

(续上页)

```
    ...
label: nop            //definition of variable label
```

SUB - Subtract from register

Syntax **SUB** *Rdst, Rsrc1, Rsrc2*

SUB *Rdst, Rsrc1, imm*

Operands

- *Rdst* - Register R[0..3]
- *Rsrc1* - Register R[0..3]
- *Rsrc2* - Register R[0..3]
- *Imm* - 16-bit signed value

Cycles 2 cycles to execute, 4 cycles to fetch next instruction

Description The instruction subtracts the source register from another source register or subtracts 16-bit signed value from a source register, and stores result to the destination register.

Examples:

```
1:          SUB R1, R2, R3              //R1 = R2 - R3

2:          sub R1, R2, 0x1234          //R1 = R2 - 0x1234

3:          .set value1, 0x03           //constant value1=0x03
            SUB R1, R2, value1          //R1 = R2 - value1
4:          .global label               //declaration of variable label
            SUB R1, R2, label           //R1 = R2 - label
              ....
  label:    nop                         //definition of variable label
```

AND - Logical AND of two operands

Syntax **AND** *Rdst, Rsrc1, Rsrc2*

AND *Rdst, Rsrc1, imm*

Operands

- *Rdst* - Register R[0..3]
- *Rsrc1* - Register R[0..3]

- *Rsrc2* - Register R[0..3]
- *Imm* - 16-bit signed value

Cycles 2 cycles to execute, 4 cycles to fetch next instruction

Description The instruction does logical AND of a source register and another source register or 16-bit signed value and stores result to the destination register.

Examples:

```
1:        AND R1, R2, R3          //R1 = R2 & R3

2:        AND R1, R2, 0x1234      //R1 = R2 & 0x1234

3:        .set value1, 0x03       //constant value1=0x03
          AND R1, R2, value1      //R1 = R2 & value1

4:        .global label           //declaration of variable label
          AND R1, R2, label       //R1 = R2 & label
              ...
  label:  nop                     //definition of variable label
```

OR - Logical OR of two operands

Syntax **OR** *Rdst, Rsrc1, Rsrc2*

OR *Rdst, Rsrc1, imm*

Operands

- *Rdst* - Register R[0..3]
- *Rsrc1* - Register R[0..3]
- *Rsrc2* - Register R[0..3]
- *Imm* - 16-bit signed value

Cycles 2 cycles to execute, 4 cycles to fetch next instruction

Description The instruction does logical OR of a source register and another source register or 16-bit signed value and stores result to the destination register.

Examples:

```
1:       OR R1, R2, R3           //R1 = R2 \| R3

2:       OR R1, R2, 0x1234       //R1 = R2 \| 0x1234
```

(下页继续)

(续上页)

```
3:        .set value1, 0x03        //constant value1=0x03
          OR R1, R2, value1        //R1 = R2 \| value1

4:        .global label            //declaration of variable label
          OR R1, R2, label         //R1 = R2 \|label
          ...
  label: nop                       //definition of variable label
```

LSH - Logical Shift Left

Syntax **LSH** *Rdst, Rsrc1, Rsrc2*

LSH *Rdst, Rsrc1, imm*

Operands

- *Rdst* - Register R[0..3]
- *Rsrc1* - Register R[0..3]
- *Rsrc2* - Register R[0..3]
- *Imm* - 16-bit signed value

Cycles 2 cycles to execute, 4 cycles to fetch next instruction

Description The instruction does logical shift to left of source register to number of bits from another source register or 16-bit signed value and store result to the destination register.

Examples:

```
1:        LSH R1, R2, R3           //R1 = R2 << R3

2:        LSH R1, R2, 0x03         //R1 = R2 << 0x03

3:        .set value1, 0x03        //constant value1=0x03
          LSH R1, R2, value1       //R1 = R2 << value1

4:        .global label            //declaration of variable label
          LSH R1, R2, label        //R1 = R2 << label
          ...
  label:  nop                       //definition of variable label
```

RSH - Logical Shift Right

Syntax **RSH** *Rdst, Rsrc1, Rsrc2*

RSH *Rdst, Rsrc1, imm*

Operands *Rdst* - Register R[0..3] *Rsrc1* - Register R[0..3] *Rsrc2* - Register R[0..3] *Imm* - 16-bit signed value

Cycles 2 cycles to execute, 4 cycles to fetch next instruction

Description The instruction does logical shift to right of source register to number of bits from another source register or 16-bit signed value and store result to the destination register.

Examples:

```
1:        RSH R1, R2, R3              //R1 = R2 >> R3

2:        RSH R1, R2, 0x03            //R1 = R2 >> 0x03

3:        .set value1, 0x03           //constant value1=0x03
          RSH R1, R2, value1          //R1 = R2 >> value1

4:        .global label               //declaration of variable label
          RSH R1, R2, label           //R1 = R2 >> label
  label:  nop                         //definition of variable label
```

MOVE – Move to register

Syntax **MOVE** *Rdst, Rsrc*

MOVE *Rdst, imm*

Operands

- *Rdst* – Register R[0..3]
- *Rsrc* – Register R[0..3]
- *Imm* – 16-bit signed value

Cycles 2 cycles to execute, 4 cycles to fetch next instruction

Description The instruction move to destination register value from source register or 16-bit signed value.

Note that when a label is used as an immediate, the address of the label will be converted from bytes to words. This is because LD, ST, and JUMP instructions expect the address register value to be expressed in words rather than bytes. To avoid using an extra instruction

Examples:

```
1:        MOVE       R1, R2            //R1 = R2 >> R3

2:        MOVE       R1, 0x03          //R1 = R2 >> 0x03

3:        .set       value1, 0x03      //constant value1=0x03
          MOVE       R1, value1        //R1 = value1

4:        .global     label            //declaration of label
          MOVE        R1, label        //R1 = address_of(label) / 4
          ...
  label:  nop                          //definition of label
```

ST – Store data to the memory

Syntax ST *Rsrc, Rdst, offset*

Operands

- *Rsrc* – Register R[0..3], holds the 16-bit value to store
- *Rdst* – Register R[0..3], address of the destination, in 32-bit words
- *Offset* – 10-bit signed value, offset in bytes

Cycles 4 cycles to execute, 4 cycles to fetch next instruction

Description The instruction stores the 16-bit value of Rsrc to the lower half-word of memory with address Rdst+offset. The upper half-word is written with the current program counter (PC), expressed in words, shifted left by 5 bits:

```
Mem[Rdst + offset / 4]{31:0} = {PC[10:0], 5'b0, Rsrc[15:0]}
```

The application can use higher 16 bits to determine which instruction in the ULP program has written any particular word into memory.

Examples:

```
1:        ST  R1, R2, 0x12        //MEM[R2+0x12] = R1

2:        .data                   //Data section definition
  Addr1:  .word     123           // Define label Addr1 16 bit
          .set      offs, 0x00    // Define constant offs
          .text                   //Text section definition
          MOVE      R1, 1         // R1 = 1
          MOVE      R2, Addr1     // R2 = Addr1
```

(下页继续)

(续上页)

```
        ST      R1, R2, offs  // MEM[R2 +  0] = R1
                              // MEM[Addr1 + 0] will be 32'h600001
```

LD – Load data from the memory

Syntax LD *Rdst, Rsrc, offset*

Operands *Rdst* – Register R[0..3], destination

Rsrc – Register R[0..3], holds address of destination, in 32-bit words

Offset – 10-bit signed value, offset in bytes

Cycles 4 cycles to execute, 4 cycles to fetch next instruction

Description The instruction loads lower 16-bit half-word from memory with address Rsrc+offset into the destination register Rdst:

```
Rdst[15:0] = Mem[Rsrc + offset / 4][15:0]
```

Examples:

```
1:      LD  R1, R2, 0x12          //R1 = MEM[R2+0x12]

2:      .data                     //Data section definition
  Addr1:.word   123               // Define label Addr1 16 bit
        .set    offs, 0x00        // Define constant offs
        .text                     //Text section definition
        MOVE    R1, 1             // R1 = 1
        MOVE    R2, Addr1         // R2 = Addr1 / 4 (address of label is converted␣
↪into words)
        LD      R1, R2, offs      // R1 = MEM[R2 +  0]
                                  // R1 will be 123
```

JUMP – Jump to an absolute address

Syntax JUMP *Rdst*

JUMP *ImmAddr*

JUMP *Rdst, Condition*

JUMP *ImmAddr, Condition*

Operands

- *Rdst* – Register R[0..3] containing address to jump to (expressed in 32-bit words)
- *ImmAddr* – 13 bits address (expressed in bytes), aligned to 4 bytes
- ***Condition*:**
  - EQ – jump if last ALU operation result was zero
  - OV – jump if last ALU has set overflow flag

Cycles 2 cycles to execute, 2 cycles to fetch next instruction

Description The instruction makes jump to the specified address. Jump can be either unconditional or based on an ALU flag.

Examples:

```
1:        JUMP       R1            // Jump to address in R1 (address in R1 is in 32-bit␣
↪words)

2:        JUMP       0x120, EQ     // Jump to address 0x120 (in bytes) if ALU result is␣
↪zero

3:        JUMP       label         // Jump to label
          ...
  label:  nop                      // Definition of label

4:        .global    label         // Declaration of global label

          MOVE       R1, label     // R1 = label (value loaded into R1 is in words)
          JUMP       R1            // Jump to label
          ...
  label:  nop                      // Definition of label
```

JUMPR – Jump to a relative offset (condition based on R0)

Syntax JUMPR *Step, Threshold, Condition*

Operands

- *Step* – relative shift from current position, in bytes
- *Threshold* – threshold value for branch condition
- ***Condition*:**
  - *GE* (greater or equal) – jump if value in R0 >= threshold
  - *LT* (less than) – jump if value in R0 < threshold

Cycles 2 cycles to execute, 2 cycles to fetch next instruction

Description The instruction makes a jump to a relative address if condition is true. Condition is the result of comparison of R0 register value and the threshold value.

Examples:

```
1:pos:    JUMPR       16, 20, GE   // Jump to address (position + 16 bytes) if value in␣
↪R0 >= 20

2:        // Down counting loop using R0 register
          MOVE        R0, 16       // load 16 into R0
  label:  SUB         R0, R0, 1    // R0--
          NOP                      // do something
          JUMPR       label, 1, GE // jump to label if R0 >= 1
```

JUMPS – Jump to a relative address (condition based on stage count)

Syntax JUMPS *Step, Threshold, Condition*

Operands

- *Step* – relative shift from current position, in bytes
- *Threshold* – threshold value for branch condition
- ***Condition*:**
  - *EQ* (equal) – jump if value in stage_cnt == threshold
  - *LT* (less than) – jump if value in stage_cnt < threshold
  - *LE* (less or equal) - jump if value in stage_cnt <= threshold
  - *GT* (greater than) – jump if value in stage_cnt > threshold
  - *GE* (greater or equal) —jump if value in stage_cnt >= threshold

Cycles Conditions *LE*, *LT*, *GE*: 2 cycles to execute, 2 cycles to fetch next instruction

Conditions *EQ*, *GT* are implemented in the assembler using two **JUMPS** instructions:

```
// JUMPS target, threshold, EQ is implemented as:

          JUMPS next, threshold, LT
          JUMPS target, threshold, LE
next:

// JUMPS target, threshold, GT is implemented as:
```

(下页继续)

(续上页)

```
        JUMPS next, threshold, LE
        JUMPS target, threshold, GE
next:
```

Therefore the execution time will depend on the branches taken: either 2 cycles to execute + 2 cycles to fetch, or 4 cycles to execute + 4 cycles to fetch.

Description The instruction makes a jump to a relative address if condition is true. Condition is the result of comparison of count register value and threshold value.

Examples:

```
1:pos:    JUMPS     16, 20, EQ     // Jump to (position + 16 bytes) if stage_cnt == 20

2:        // Up counting loop using stage count register
          STAGE_RST                 // set stage_cnt to 0
  label:  STAGE_INC  1              // stage_cnt++
          NOP                       // do something
          JUMPS       label, 16, LT  // jump to label if stage_cnt < 16
```

STAGE_RST – Reset stage count register

Syntax STAGE_RST

Operands No operands

Description The instruction sets the stage count register to 0

Cycles 2 cycles to execute, 4 cycles to fetch next instruction

Examples:

```
1:       STAGE_RST      // Reset stage count register
```

STAGE_INC – Increment stage count register

Syntax STAGE_INC *Value*

Operands

- *Value* – 8 bits value

Cycles 2 cycles to execute, 4 cycles to fetch next instruction

Description The instruction increments stage count register by given value.

Examples:

```
1:        STAGE_INC      10          // stage_cnt += 10

2:        // Up counting loop example:
          STAGE_RST                  // set stage_cnt to 0
  label:  STAGE_INC  1               // stage_cnt++
          NOP                        // do something
          JUMPS      label, 16, LT   // jump to label if stage_cnt < 16
```

STAGE_DEC – Decrement stage count register

Syntax **STAGE_DEC** *Value*

Operands

- *Value* – 8 bits value

Cycles 2 cycles to execute, 4 cycles to fetch next instruction

Description The instruction decrements stage count register by given value.

Examples:

```
1:        STAGE_DEC      10        // stage_cnt -= 10;

2:        // Down counting loop exaple
          STAGE_RST                // set stage_cnt to 0
          STAGE_INC  16            // increment stage_cnt to 16
  label:  STAGE_DEC  1             // stage_cnt--;
          NOP                      // do something
          JUMPS      label, 0, GT  // jump to label if stage_cnt > 0
```

HALT – End the program

Syntax **HALT**

Operands No operands

Cycles 2 cycles to execute

Description The instruction halts the ULP coprocessor and restarts ULP wakeup timer, if it is enabled.

Examples:

```
1:       HALT      // Halt the coprocessor
```

WAKE – Wake up the chip

Syntax **WAKE**

Operands No operands

Cycles 2 cycles to execute, 4 cycles to fetch next instruction

Description The instruction sends an interrupt from ULP to RTC controller.

- If the SoC is in deep sleep mode, and ULP wakeup is enabled, this causes the SoC to wake up.
- If the SoC is not in deep sleep mode, and ULP interrupt bit (RTC_CNTL_ULP_CP_INT_ENA) is set in RTC_CNTL_INT_ENA_REG register, RTC interrupt will be triggered.

Note that before using WAKE instruction, ULP program may needs to wait until RTC controller is ready to wake up the main CPU. This is indicated using RTC_CNTL_RDY_FOR_WAKEUP bit of RTC_CNTL_LOW_POWER_ST_REG register. If WAKE instruction is executed while RTC_CNTL_RDY_FOR_WAKEUP is zero, it has no effect (wake up does not occur).

Examples:

```
1: is_rdy_for_wakeup:                   // Read RTC_CNTL_RDY_FOR_WAKEUP bit
          READ_RTC_FIELD(RTC_CNTL_LOW_POWER_ST_REG, RTC_CNTL_RDY_FOR_WAKEUP)
          AND r0, r0, 1
          JUMP is_rdy_for_wakeup, eq    // Retry until the bit is set
          WAKE                          // Trigger wake up
          REG_WR 0x006, 24, 24, 0       // Stop ULP timer (clear RTC_CNTL_ULP_CP_SLP_
↪TIMER_EN)
          HALT                          // Stop the ULP program
          // After these instructions, SoC will wake up,
          // and ULP will not run again until started by the main program.
```

SLEEP – set ULP wakeup timer period

Syntax **SLEEP** *sleep_reg*

Operands

- *sleep_reg* – 0..4, selects one of `SENS_ULP_CP_SLEEP_CYCx_REG` registers.

Cycles 2 cycles to execute, 4 cycles to fetch next instruction

Description The instruction selects which of the `SENS_ULP_CP_SLEEP_CYCx_REG` (x = 0..4) register values is to be used by the ULP wakeup timer as wakeup period. By default, the value from `SENS_ULP_CP_SLEEP_CYC0_REG` is used.

Examples:

```
1:        SLEEP     1          // Use period set in SENS_ULP_CP_SLEEP_CYC1_REG

2:        .set sleep_reg, 4    // Set constant
          SLEEP  sleep_reg     // Use period set in SENS_ULP_CP_SLEEP_CYC4_REG
```

WAIT – wait some number of cycles

Syntax **WAIT** *Cycles*

Operands

- *Cycles* – number of cycles for wait

Cycles 2 + *Cycles* cycles to execute, 4 cycles to fetch next instruction

Description The instruction delays for given number of cycles.

Examples:

```
1:        WAIT     10          // Do nothing for 10 cycles

2:        .set  wait_cnt, 10   // Set a constant
          WAIT  wait_cnt       // wait for 10 cycles
```

TSENS – do measurement with temperature sensor

Syntax

- **TSENS** *Rdst, Wait_Delay*

Operands

- *Rdst* – Destination Register R[0..3], result will be stored to this register
- *Wait_Delay* – number of cycles used to perform the measurement

Cycles 2 + *Wait_Delay* + 3 * TSENS_CLK to execute, 4 cycles to fetch next instruction

Description The instruction performs measurement using TSENS and stores the result into a general purpose register.

Examples:

```
1:        TSENS     R1, 1000     // Measure temperature sensor for 1000 cycles,
                                 // and store result to R1
```

ADC – do measurement with ADC

Syntax

- **ADC** *Rdst, Sar_sel, Mux*
- **ADC** *Rdst, Sar_sel, Mux, 0* —deprecated form

Operands

- *Rdst* – Destination Register R[0..3], result will be stored to this register
- *Sar_sel* – Select ADC: 0 = SARADC1, 1 = SARADC2
- *Mux* - selected PAD, SARADC Pad[Mux+1] is enabled

Cycles `23 + max(1, SAR_AMP_WAIT1) + max(1, SAR_AMP_WAIT2) + max(1, SAR_AMP_WAIT3) + SARx_SAMPLE_CYCLE + SARx_SAMPLE_BIT` cycles to execute, 4 cycles to fetch next instruction

Description The instruction makes measurements from ADC.

Examples:

```
1:        ADC      R1, 0, 1      // Measure value using ADC1 pad 2 and store result into␣
↪R1
```

I2C_RD - read single byte from I2C slave

Syntax

- **I2C_RD** *Sub_addr, High, Low, Slave_sel*

Operands

- *Sub_addr* – Address within the I2C slave to read.
- *High*, *Low* —Define range of bits to read. Bits outside of [High, Low] range are masked.
- *Slave_sel* - Index of I2C slave address to use.

Cycles Execution time mostly depends on I2C communication time. 4 cycles to fetch next instruction.

Description `I2C_RD` instruction reads one byte from I2C slave with index `Slave_sel`. Slave address (in 7-bit format) has to be set in advance into *SENS_I2C_SLAVE_ADDRx* register field, where `x == Slave_sel`. 8 bits of read result is stored into *R0* register.

Examples:

```
1:        I2C_RD      0x10, 7, 0, 0      // Read byte from sub-address 0x10 of slave␣
↪with address set in SENS_I2C_SLAVE_ADDR0
```

I2C_WR - write single byte to I2C slave

Syntax

- **I2C_WR** *Sub_addr, Value, High, Low, Slave_sel*

Operands

- *Sub_addr* – Address within the I2C slave to write.
- *Value* – 8-bit value to be written.
- *High*, *Low* —Define range of bits to write. Bits outside of [High, Low] range are masked.
- *Slave_sel* - Index of I2C slave address to use.

Cycles Execution time mostly depends on I2C communication time. 4 cycles to fetch next instruction.

Description `I2C_WR` instruction writes one byte to I2C slave with index `Slave_sel`. Slave address (in 7-bit format) has to be set in advance into *SENS_I2C_SLAVE_ADDRx* register field, where `x == Slave_sel`.

Examples:

```
1:        I2C_WR      0x20, 0x33, 7, 0, 1      // Write byte 0x33 to sub-address 0x20 of␣
↪slave with address set in SENS_I2C_SLAVE_ADDR1.
```

REG_RD – read from peripheral register

Syntax **REG_RD** *Addr, High, Low*

Operands

- *Addr* – register address, in 32-bit words
- *High* – High part of R0
- *Low* – Low part of R0

Cycles 4 cycles to execute, 4 cycles to fetch next instruction

Description The instruction reads up to 16 bits from a peripheral register into a general purpose register: `R0 = REG[Addr][High:Low]`.

This instruction can access registers in RTC_CNTL, RTC_IO, SENS, and RTC_I2C peripherals. Address of the the register, as seen from the ULP, can be calculated from the address of the same register on the DPORT bus as follows:

```
addr_ulp = (addr_dport - DR_REG_RTCCNTL_BASE) / 4
```

Examples:

```
1:        REG_RD      0x120, 2, 0     // load 4 bits: R0 = {12'b0, REG[0x120][7:4]}
```

REG_WR – write to peripheral register

Syntax REG_WR *Addr, High, Low, Data*

Operands

- *Addr* – register address, in 32-bit words.
- *High* – High part of R0
- *Low* – Low part of R0
- *Data* – value to write, 8 bits

Cycles 8 cycles to execute, 4 cycles to fetch next instruction

Description The instruction writes up to 8 bits from a general purpose register into a peripheral register.

`REG[Addr][High:Low] = data`

This instruction can access registers in RTC_CNTL, RTC_IO, SENS, and RTC_I2C peripherals. Address of the the register, as seen from the ULP, can be calculated from the address of the same register on the DPORT bus as follows:

```
addr_ulp = (addr_dport - DR_REG_RTCCNTL_BASE) / 4
```

Examples:

```
1:        REG_WR      0x120, 7, 0, 0x10   // set 8 bits: REG[0x120][7:0] = 0x10
```

Convenience macros for peripheral registers access

ULP source files are passed through C preprocessor before the assembler. This allows certain macros to be used to facilitate access to peripheral registers.

Some existing macros are defined in `soc/soc_ulp.h` header file. These macros allow access to the fields of peripheral registers by their names. Peripheral registers names which can be used with these macros are the ones defined in `soc/rtc_cntl_reg.h`, `soc/rtc_io_reg.h`, `soc/sens_reg.h`, and `soc/rtc_i2c_reg.h`.

READ_RTC_REG(rtc_reg, low_bit, bit_width) Read up to 16 bits from rtc_reg[low_bit + bit_width - 1 : low_bit] into R0. For example:

```
#include "soc/soc_ulp.h"
#include "soc/rtc_cntl_reg.h"
```

(下页继续)

(续上页)

```
/* Read 16 lower bits of RTC_CNTL_TIME0_REG into R0 */
READ_RTC_REG(RTC_CNTL_TIME0_REG, 0, 16)
```

READ_RTC_FIELD(rtc_reg, field) Read from a field in rtc_reg into R0, up to 16 bits. For example:

```
#include "soc/soc_ulp.h"
#include "soc/sens_reg.h"

/* Read 8-bit SENS_TSENS_OUT field of SENS_SAR_SLAVE_ADDR3_REG into R0 */
READ_RTC_FIELD(SENS_SAR_SLAVE_ADDR3_REG, SENS_TSENS_OUT)
```

WRITE_RTC_REG(rtc_reg, low_bit, bit_width, value) Write immediate value into rtc_reg[low_bit + bit_width - 1 : low_bit], bit_width <= 8. For example:

```
#include "soc/soc_ulp.h"
#include "soc/rtc_io_reg.h"

/* Set BIT(2) of RTC_GPIO_OUT_DATA_W1TS field in RTC_GPIO_OUT_W1TS_REG */
WRITE_RTC_REG(RTC_GPIO_OUT_W1TS_REG, RTC_GPIO_OUT_DATA_W1TS_S + 2, 1, 1)
```

WRITE_RTC_FIELD(rtc_reg, field, value) Write immediate value into a field in rtc_reg, up to 8 bits. For example:

```
#include "soc/soc_ulp.h"
#include "soc/rtc_cntl_reg.h"

/* Set RTC_CNTL_ULP_CP_SLP_TIMER_EN field of RTC_CNTL_STATE0_REG to 0 */
WRITE_RTC_FIELD(RTC_CNTL_STATE0_REG, RTC_CNTL_ULP_CP_SLP_TIMER_EN, 0)
```

5.16.2 Programming ULP coprocessor using C macros

In addition to the existing binutils port for the ESP32 ULP coprocessor, it is possible to generate programs for the ULP by embedding assembly-like macros into an ESP32 application. Here is an example how this can be done:

```
const ulp_insn_t program[] = {
    I_MOVI(R3, 16),          // R3 <- 16
    I_LD(R0, R3, 0),         // R0 <- RTC_SLOW_MEM[R3 + 0]
    I_LD(R1, R3, 1),         // R1 <- RTC_SLOW_MEM[R3 + 1]
    I_ADDR(R2, R0, R1),      // R2 <- R0 + R1
```

(下页继续)

(续上页)

```
    I_ST(R2, R3, 2),        // R2 -> RTC_SLOW_MEM[R2 + 2]
    I_HALT()
};
size_t load_addr = 0;
size_t size = sizeof(program)/sizeof(ulp_insn_t);
ulp_process_macros_and_load(load_addr, program, &size);
ulp_run(load_addr);
```

The `program` array is an array of `ulp_insn_t`, i.e. ULP coprocessor instructions. Each `I_XXX` preprocessor define translates into a single 32-bit instruction. Arguments of these preprocessor defines can be register numbers (`R0` —`R3`) and literal constants. See *ULP coprocessor instruction defines* section for descriptions of instructions and arguments they take.

注解: Because some of the instruction macros expand to inline function calls, defining such array in global scope will cause the compiler to produce an "initializer element is not constant" error. To fix this error, move the definition of instructions array into local scope.

Load and store instructions use addresses expressed in 32-bit words. Address 0 corresponds to the first word of `RTC_SLOW_MEM` (which is address 0x50000000 as seen by the main CPUs).

To generate branch instructions, special `M_` preprocessor defines are used. `M_LABEL` define can be used to define a branch target. Label identifier is a 16-bit integer. `M_Bxxx` defines can be used to generate branch instructions with target set to a particular label.

Implementation note: these `M_` preprocessor defines will be translated into two `ulp_insn_t` values: one is a token value which contains label number, and the other is the actual instruction. `ulp_process_macros_and_load` function resolves the label number to the address, modifies the branch instruction to use the correct address, and removes the the extra `ulp_insn_t` token which contains the label numer.

Here is an example of using labels and branches:

```
const ulp_insn_t program[] = {
    I_MOVI(R0, 34),         // R0 <- 34
    M_LABEL(1),             // label_1
    I_MOVI(R1, 32),         // R1 <- 32
    I_LD(R1, R1, 0),        // R1 <- RTC_SLOW_MEM[R1]
    I_MOVI(R2, 33),         // R2 <- 33
    I_LD(R2, R2, 0),        // R2 <- RTC_SLOW_MEM[R2]
    I_SUBR(R3, R1, R2),     // R3 <- R1 - R2
    I_ST(R3, R0, 0),        // R3 -> RTC_SLOW_MEM[R0 + 0]
```

(下页继续)

(续上页)

```
    I_ADDI(R0, R0, 1),      // R0++
    M_BL(1, 64),            // if (R0 < 64) goto label_1
    I_HALT(),
};
RTC_SLOW_MEM[32] = 42;
RTC_SLOW_MEM[33] = 18;
size_t load_addr = 0;
size_t size = sizeof(program)/sizeof(ulp_insn_t);
ulp_process_macros_and_load(load_addr, program, &size);
ulp_run(load_addr);
```

Functions

esp_err_t **ulp_process_macros_and_load**(uint32_t *load_addr*, **const** ulp_insn_t **program*, size_t *psize)

Resolve all macro references in a program and load it into RTC memory.

Return

- ESP_OK on success
- ESP_ERR_NO_MEM if auxiliary temporary structure can not be allocated
- one of ESP_ERR_ULP_xxx if program is not valid or can not be loaded

Parameters

- `load_addr`: address where the program should be loaded, expressed in 32-bit words
- `program`: ulp_insn_t array with the program
- `psize`: size of the program, expressed in 32-bit words

esp_err_t **ulp_run**(uint32_t *entry_point*)

Run the program loaded into RTC memory.

Return ESP_OK on success

Parameters

- `entry_point`: entry point, expressed in 32-bit words

Error codes

`ESP_ERR_ULP_BASE`

Offset for ULP-related error codes

ESP_ERR_ULP_SIZE_TOO_BIG
: Program doesn’ t fit into RTC memory reserved for the ULP

ESP_ERR_ULP_INVALID_LOAD_ADDR
: Load address is outside of RTC memory reserved for the ULP

ESP_ERR_ULP_DUPLICATE_LABEL
: More than one label with the same number was defined

ESP_ERR_ULP_UNDEFINED_LABEL
: Branch instructions references an undefined label

ESP_ERR_ULP_BRANCH_OUT_OF_RANGE
: Branch target is out of range of B instruction (try replacing with BX)

ULP coprocessor registers

ULP co-processor has 4 16-bit general purpose registers. All registers have same functionality, with one exception. R0 register is used by some of the compare-and-branch instructions as a source register.

These definitions can be used for all instructions which require a register.

R0
: general purpose register 0

R1
: general purpose register 1

R2
: general purpose register 2

R3
: general purpose register 3

ULP coprocessor instruction defines

I_DELAY(cycles_)
: Delay (nop) for a given number of cycles

I_HALT()
: Halt the coprocessor.

  This instruction halts the coprocessor, but keeps ULP timer active. As such, ULP program will be restarted again by timer. To stop the program and prevent the timer from restarting the program, use I_END(0) instruction.

I_END()
: Stop ULP program timer.

This is a convenience macro which disables the ULP program timer. Once this instruction is used, ULP program will not be restarted anymore until ulp_run function is called.

ULP program will continue running after this instruction. To stop the currently running program, use I_HALT().

`I_ST`(reg_val, reg_addr, offset_)

Store value from register reg_val into RTC memory.

The value is written to an offset calculated by adding value of reg_addr register and offset_ field (this offset is expressed in 32-bit words). 32 bits written to RTC memory are built as follows:

- bits [31:21] hold the PC of current instruction, expressed in 32-bit words
- bits [20:16] = 5' b1
- bits [15:0] are assigned the contents of reg_val

RTC_SLOW_MEM[addr + offset_] = { 5' b0, insn_PC[10:0], val[15:0] }

`I_LD`(reg_dest, reg_addr, offset_)

Load value from RTC memory into reg_dest register.

Loads 16 LSBs from RTC memory word given by the sum of value in reg_addr and value of offset_.

`I_WR_REG`(reg, low_bit, high_bit, val)

Write literal value to a peripheral register

reg[high_bit : low_bit] = val This instruction can access RTC_CNTL_, RTC_IO_, SENS_, and RTC_I2C peripheral registers.

`I_RD_REG`(reg, low_bit, high_bit)

Read from peripheral register into R0

R0 = reg[high_bit : low_bit] This instruction can access RTC_CNTL_, RTC_IO_, SENS_, and RTC_I2C peripheral registers.

`I_BL`(pc_offset, imm_value)

Branch relative if R0 less than immediate value.

pc_offset is expressed in words, and can be from -127 to 127 imm_value is a 16-bit value to compare R0 against

`I_BGE`(pc_offset, imm_value)

Branch relative if R0 greater or equal than immediate value.

pc_offset is expressed in words, and can be from -127 to 127 imm_value is a 16-bit value to compare R0 against

`I_BXR`(reg_pc)

Unconditional branch to absolute PC, address in register.

reg_pc is the register which contains address to jump to. Address is expressed in 32-bit words.

`I_BXI`(imm_pc)
: Unconditional branch to absolute PC, immediate address.

  Address imm_pc is expressed in 32-bit words.

`I_BXZR`(reg_pc)
: Branch to absolute PC if ALU result is zero, address in register.

  reg_pc is the register which contains address to jump to. Address is expressed in 32-bit words.

`I_BXZI`(imm_pc)
: Branch to absolute PC if ALU result is zero, immediate address.

  Address imm_pc is expressed in 32-bit words.

`I_BXFR`(reg_pc)
: Branch to absolute PC if ALU overflow, address in register

  reg_pc is the register which contains address to jump to. Address is expressed in 32-bit words.

`I_BXFI`(imm_pc)
: Branch to absolute PC if ALU overflow, immediate address

  Address imm_pc is expressed in 32-bit words.

`I_ADDR`(reg_dest, reg_src1, reg_src2)
: Addition: dest = src1 + src2

`I_SUBR`(reg_dest, reg_src1, reg_src2)
: Subtraction: dest = src1 - src2

`I_ANDR`(reg_dest, reg_src1, reg_src2)
: Logical AND: dest = src1 & src2

`I_ORR`(reg_dest, reg_src1, reg_src2)
: Logical OR: dest = src1 | src2

`I_MOVR`(reg_dest, reg_src)
: Copy: dest = src

`I_LSHR`(reg_dest, reg_src, reg_shift)
: Logical shift left: dest = src << shift

`I_RSHR`(reg_dest, reg_src, reg_shift)
: Logical shift right: dest = src >> shift

`I_ADDI`(reg_dest, reg_src, imm_)
: Add register and an immediate value: dest = src1 + imm

`I_SUBI`(reg_dest, reg_src, imm_)
: Subtract register and an immediate value: dest = src - imm

`I_ANDI`(reg_dest, reg_src, imm_)

Logical AND register and an immediate value: dest = src & imm

`I_ORI`(reg_dest, reg_src, imm_)

Logical OR register and an immediate value: dest = src | imm

`I_MOVI`(reg_dest, imm_)

Copy an immediate value into register: dest = imm

`I_LSHI`(reg_dest, reg_src, imm_)

Logical shift left register value by an immediate: dest = src << imm

`I_RSHI`(reg_dest, reg_src, imm_)

Logical shift right register value by an immediate: dest = val >> imm

`M_LABEL`(label_num)

Define a label with number label_num.

This is a macro which doesn' t generate a real instruction. The token generated by this macro is removed by ulp_process_macros_and_load function. Label defined using this macro can be used in branch macros defined below.

`M_BL`(label_num, imm_value)

Macro: branch to label label_num if R0 is less than immediate value.

This macro generates two ulp_insn_t values separated by a comma, and should be used when defining contents of ulp_insn_t arrays. First value is not a real instruction; it is a token which is removed by ulp_process_macros_and_load function.

`M_BGE`(label_num, imm_value)

Macro: branch to label label_num if R0 is greater or equal than immediate value

This macro generates two ulp_insn_t values separated by a comma, and should be used when defining contents of ulp_insn_t arrays. First value is not a real instruction; it is a token which is removed by ulp_process_macros_and_load function.

`M_BX`(label_num)

Macro: unconditional branch to label

This macro generates two ulp_insn_t values separated by a comma, and should be used when defining contents of ulp_insn_t arrays. First value is not a real instruction; it is a token which is removed by ulp_process_macros_and_load function.

`M_BXZ`(label_num)

Macro: branch to label if ALU result is zero

This macro generates two ulp_insn_t values separated by a comma, and should be used when defining contents of ulp_insn_t arrays. First value is not a real instruction; it is a token which is removed by ulp_process_macros_and_load function.

`M_BXF`(label_num)

Macro: branch to label if ALU overflow

This macro generates two ulp_insn_t values separated by a comma, and should be used when defining contents of ulp_insn_t arrays. First value is not a real instruction; it is a token which is removed by ulp_process_macros_and_load function.

Defines

`RTC_SLOW_MEM`

RTC slow memory, 8k size

ULP (Ultra Low Power) coprocessor is a simple FSM which is designed to perform measurements using ADC, temperature sensor, and external I2C sensors, while main processors are in deep sleep mode. ULP coprocessor can access RTC_SLOW_MEM memory region, and registers in RTC_CNTL, RTC_IO, and SARADC peripherals. ULP coprocessor uses fixed-width 32-bit instructions, 32-bit memory addressing, and has 4 general purpose 16-bit registers.

5.16.3 Installing the toolchain

ULP coprocessor code is written in assembly and compiled using the binutils-esp32ulp toolchain.

1. Download pre-built binaries of the latest toolchain release from: https://github.com/espressif/binutils-esp32ulp/releases.

2. Extract the toolchain into a directory, and add the path to the `bin/` directory of the toolchain to the `PATH` environment variable.

5.16.4 Compiling ULP code

To compile ULP code as part of a component, the following steps must be taken:

1. ULP code, written in assembly, must be added to one or more files with *.S* extension. These files must be placed into a separate directory inside component directory, for instance *ulp/*.

2. Modify the component makefile, adding the following:

```
ULP_APP_NAME ?= ulp_$(COMPONENT_NAME)
ULP_S_SOURCES = $(COMPONENT_PATH)/ulp/ulp_source_file.S
ULP_EXP_DEP_OBJECTS := main.o
include $(IDF_PATH)/components/ulp/component_ulp_common.mk
```

Here is each line explained:

ULP_APP_NAME Name of the generated ULP application, without an extension. This name is used for build products of the ULP application: ELF file, map file, binary file, generated header file, and generated linker export file.

ULP_S_SOURCES List of assembly files to be passed to the ULP assembler. These must be absolute paths, i.e. start with `$(COMPONENT_PATH)`. Consider using `$(addprefix)` function if more than one file needs to be listed. Paths are relative to component build directory, so prefixing them is not necessary.

ULP_EXP_DEP_OBJECTS List of object files names within the component which include the generated header file. This list is needed to build the dependencies correctly and ensure that the generated header file is created before any of these files are compiled. See section below explaining the concept of generated header files for ULP applications.

include $(IDF_PATH)/components/ulp/component_ulp_common.mk Includes common definitions of ULP build steps. Defines build targets for ULP object files, ELF file, binary file, etc.

3. Build the application as usual (e.g. *make app*)

   Inside, the build system will take the following steps to build ULP program:

   1. **Run each assembly file (foo.S) through C preprocessor.** This step generates the preprocessed assembly files (foo.ulp.pS) in the component build directory. This step also generates dependency files (foo.ulp.d).
   2. **Run preprocessed assembly sources through assembler.** This produces objects (foo.ulp.o) and listing (foo.ulp.lst) files. Listing files are generated for debugging purposes and are not used at later stages of build process.
   3. **Run linker script template through C preprocessor.** The template is located in components/ulp/ld directory.
   4. **Link object files into an output ELF file** (ulp_app_name.elf). Map file (ulp_app_name.map) generated at this stage may be useful for debugging purposes.
   5. **Dump contents of the ELF file into binary** (ulp_app_name.bin) for embedding into the application.
   6. **Generate list of global symbols** (ulp_app_name.sym) in the ELF file using esp32ulp-elf-nm.
   7. **Create LD export script and header file** (ulp_app_name.ld and ulp_app_name.h) containing the symbols from ulp_app_name.sym. This is done using esp32ulp_mapgen.py utility.
   8. **Add the generated binary to the list of binary files** to be emedded into the application.

5.16.5 Accessing ULP program variables

Global symbols defined in the ULP program may be used inside the main program.

For example, ULP program may define a variable `measurement_count` which will define the number of ADC measurements the program needs to make before waking up the chip from deep sleep:

```
                        .global measurement_count
measurement_count:      .long 0

                        /* later, use measurement_count */
                        move r3, measurement_count
                        ld r3, r3, 0
```

Main program needs to initialize this variable before ULP program is started. Build system makes this possible by generating a `$(ULP_APP_NAME).h` and `$(ULP_APP_NAME).ld` files which define global symbols present in the ULP program. This files include each global symbol defined in the ULP program, prefixed with `ulp_`.

The header file contains declaration of the symbol:

```
extern uint32_t ulp_measurement_count;
```

Note that all symbols (variables, arrays, functions) are declared as `uint32_t`. For functions and arrays, take address of the symbol and cast to the appropriate type.

The generated linker script file defines locations of symbols in RTC_SLOW_MEM:

```
PROVIDE ( ulp_measurement_count = 0x50000060 );
```

To access ULP program variables from the main program, include the generated header file and use variables as one normally would:

```
#include "ulp_app_name.h"

// later
void init_ulp_vars() {
    ulp_measurement_count = 64;
}
```

Note that ULP program can only use lower 16 bits of each 32-bit word in RTC memory, because the registers are 16-bit, and there is no instruction to load from high part of the word.

Likewise, ULP store instruction writes register value into the lower 16 bit part of the 32-bit word. Upper 16 bits are written with a value which depends on the address of the store instruction, so when reading variables written by the ULP, main application needs to mask upper 16 bits, e.g.:

```
printf("Last measurement value: %d\n", ulp_last_measurement & UINT16_MAX);
```

5.16.6 Starting the ULP program

To run a ULP program, main application needs to load the ULP program into RTC memory using `ulp_load_binary` function, and then start it using `ulp_run` function.

Note that "Enable Ultra Low Power (ULP) Coprocessor" option must be enabled in menuconfig in order to reserve memory for the ULP. "RTC slow memory reserved for coprocessor" option must be set to a value sufficient to store ULP code and data. If the application components contain multiple ULP programs, then the size of the RTC memory must be sufficient to hold the largest one.

Each ULP program is embedded into the ESP-IDF application as a binary blob. Application can reference this blob and load it in the following way (suppose ULP_APP_NAME was defined to `ulp_app_name`:

```
extern const uint8_t bin_start[] asm("_binary_ulp_app_name_bin_start");
extern const uint8_t bin_end[]   asm("_binary_ulp_app_name_bin_end");

void start_ulp_program() {
    ESP_ERROR_CHECK( ulp_load_binary(
        0 /* load address, set to 0 when using default linker scripts */,
        bin_start,
        (bin_end - bin_start) / sizeof(uint32_t)) );
}
```

esp_err_t **ulp_load_binary**(uint32_t *load_addr*, **const** uint8_t **program_binary*, size_t *program_size*)

Load ULP program binary into RTC memory.

ULP program binary should have the following format (all values little-endian):

1. MAGIC, (value 0x00706c75, 4 bytes)
2. TEXT_OFFSET, offset of .text section from binary start (2 bytes)
3. TEXT_SIZE, size of .text section (2 bytes)
4. DATA_SIZE, size of .data section (2 bytes)
5. BSS_SIZE, size of .bss section (2 bytes)
6. (TEXT_OFFSET - 12) bytes of arbitrary data (will not be loaded into RTC memory)
7. .text section
8. .data section

Linker script in components/ulp/ld/esp32.ulp.ld produces ELF files which correspond to this format. This linker script produces binaries with load_addr == 0.

Return

- ESP_OK on success
- ESP_ERR_INVALID_ARG if load_addr is out of range
- ESP_ERR_INVALID_SIZE if program_size doesn' t match (TEXT_OFFSET + TEXT_SIZE + DATA_SIZE)
- ESP_ERR_NOT_SUPPORTED if the magic number is incorrect

Parameters

- `load_addr`: address where the program should be loaded, expressed in 32-bit words
- `program_binary`: pointer to program binary
- `program_size`: size of the program binary

Once the program is loaded into RTC memory, application can start it, passing the address of the entry point to `ulp_run` function:

```
ESP_ERROR_CHECK( ulp_run(&ulp_entry - RTC_SLOW_MEM) );
```

esp_err_t **ulp_run**(uint32_t *entry_point*)

Run the program loaded into RTC memory.

Return ESP_OK on success

Parameters

- `entry_point`: entry point, expressed in 32-bit words

Declaration of the entry point symbol comes from the above mentioned generated header file, `$(ULP_APP_NAME).h`. In assembly source of the ULP application, this symbol must be marked as `.global`:

```
        .global entry
entry:
        /* code starts here */
```

5.16.7 ULP program flow

ULP coprocessor is started by a timer. The timer is started once `ulp_run` is called. The timer counts a number of RTC_SLOW_CLK ticks (by default, produced by an internal 150kHz RC oscillator). The number of ticks is set using `SENS_ULP_CP_SLEEP_CYCx_REG` registers (x = 0..4). When starting the ULP for the first time, `SENS_ULP_CP_SLEEP_CYC0_REG` will be used to set the number of timer ticks. Later the ULP program can select another `SENS_ULP_CP_SLEEP_CYCx_REG` register using `sleep` instruction.

The application can set ULP timer period values (SENS_ULP_CP_SLEEP_CYCx_REG, x = 0..4) using `ulp_set_wakeup_period` function.

esp_err_t **ulp_set_wakeup_period**(size_t *period_index*, uint32_t *period_us*)

Set one of ULP wakeup period values.

ULP coprocessor starts running the program when the wakeup timer counts up to a given value (called period). There are 5 period values which can be programmed into SENS_ULP_CP_SLEEP_CYCx_REG registers, x = 0..4. By default, wakeup timer will use the period set into SENS_ULP_CP_SLEEP_CYC0_REG, i.e. period number 0. ULP program code can use SLEEP instruction to select which of the SENS_ULP_CP_SLEEP_CYCx_REG should be used for subsequent wakeups.

However, please note that SLEEP instruction issued (from ULP program) while the system is in deep sleep mode does not have effect, and sleep cycle count 0 is used.

Note The ULP FSM requires two clock cycles to wakeup before being able to run the program. Then additional 16 cycles are reserved after wakeup waiting until the 8M clock is stable. The FSM also requires two more clock cycles to go to sleep after the program execution is halted. The minimum wakeup period that may be set up for the ULP is equal to the total number of cycles spent on the above internal tasks. For a default configuration of the ULP running at 150kHz it makes about 133us.

Return

- ESP_OK on success
- ESP_ERR_INVALID_ARG if period_index is out of range

Parameters

- `period_index`: wakeup period setting number (0 - 4)
- `period_us`: wakeup period, us

Once the timer counts the number of ticks set in the selected `SENS_ULP_CP_SLEEP_CYCx_REG` register, ULP coprocessor powers up and starts running the program from the entry point set in the call to `ulp_run`.

The program runs until it encounters a `halt` instruction or an illegal instruction. Once the program halts, ULP coprocessor powers down, and the timer is started again.

To disable the timer (effectively preventing the ULP program from running again), clear the `RTC_CNTL_ULP_CP_SLP_TIMER_EN` bit in the `RTC_CNTL_STATE0_REG` register. This can be done both from ULP code and from the main program.

5.17 ULP coprocessor programming (CMake)

ULP (Ultra Low Power) coprocessor is a simple FSM which is designed to perform measurements using ADC, temperature sensor, and external I2C sensors, while main processors are in deep sleep mode. ULP coprocessor can access RTC_SLOW_MEM memory region, and registers in RTC_CNTL, RTC_IO, and

SARADC peripherals. ULP coprocessor uses fixed-width 32-bit instructions, 32-bit memory addressing, and has 4 general purpose 16-bit registers.

5.17.1 Installing the toolchain

ULP coprocessor code is written in assembly and compiled using the binutils-esp32ulp toolchain.

1. Download pre-built binaries of the latest toolchain release from: https://github.com/espressif/binutils-esp32ulp/releases.

2. Extract the toolchain into a directory, and add the path to the `bin/` directory of the toolchain to the `PATH` environment variable.

5.17.2 Compiling ULP code

To compile ULP code as part of a component, the following steps must be taken:

1. ULP code, written in assembly, must be added to one or more files with *.S* extension. These files must be placed into a separate directory inside component directory, for instance *ulp/*.

2. Modify component CMakeLists.txt, appending the necessary ULP CMake definitions. As an example:

```
set(ULP_APP_NAME ulp_${COMPONENT_NAME})
set(ULP_S_SOURCES ulp/ulp_assembly_source_file.S)
set(ULP_EXP_DEP_SRCS "ulp_c_source_file.c")
include(${IDF_PATH}/components/ulp/component_ulp_common.cmake)
```

Here is each line explained:

set(ULP_APP_NAME ulp_${COMPONENT_NAME}) Sets the name of the generated ULP application, without an extension. This name is used for build products of the ULP application: ELF file, map file, binary file, generated header file, and generated linker export file.

set(ULP_S_SOURCES "ulp/ulp_assembly_source_file_1.S ulp/ulp_assembly_source_file_2.S") Sets list of assembly files to be passed to the ULP assembler. The list should be space-delimited and the paths can either be absolute or relative to component CMakeLists.txt.

set(ULP_EXP_DEP_SRCS "ulp_c_source_file_1.c ulp_c_source_file_2.c") Sets list of source files names within the component which include the generated header file. This list is needed to build the dependencies correctly and ensure that the generated header file is created before any of these files are compiled. See section below explaining the concept of generated header files for ULP applications. The list should be space-delimited and the paths can either be absolute or relative to component CMakeLists.txt.

include(${IDF_PATH}/components/ulp/component_ulp_common.cmake) Includes common definitions of ULP build steps. Configures build for ULP object files, ELF file, binary file, etc using the ULP toolchain.

3. Build the application as usual (e.g. *idf.py app*)

   Inside, the build system will take the following steps to build ULP program:

   1. **Run each assembly file (foo.S) through C preprocessor.** This step generates the preprocessed assembly files (foo.ulp.S) in the component build directory. This step also generates dependency files (foo.ulp.d).
   2. **Run preprocessed assembly sources through assembler.** This produces objects (foo.ulp.o) and listing (foo.ulp.lst) files. Listing files are generated for debugging purposes and are not used at later stages of build process.
   3. **Run linker script template through C preprocessor.** The template is located in components/ulp/ld directory.
   4. **Link object files into an output ELF file** (ulp_app_name.elf). Map file (ulp_app_name.map) generated at this stage may be useful for debugging purposes.
   5. **Dump contents of the ELF file into binary** (ulp_app_name.bin) for embedding into the application.
   6. **Generate list of global symbols** (ulp_app_name.sym) in the ELF file using esp32ulp-elf-nm.
   7. **Create LD export script and header file** (ulp_app_name.ld and ulp_app_name.h) containing the symbols from ulp_app_name.sym. This is done using esp32ulp_mapgen.py utility.
   8. **Add the generated binary to the list of binary files** to be emedded into the application.

5.17.3 Accessing ULP program variables

Global symbols defined in the ULP program may be used inside the main program.

For example, ULP program may define a variable `measurement_count` which will define the number of ADC measurements the program needs to make before waking up the chip from deep sleep:

```
                        .global measurement_count
measurement_count:      .long 0

                        /* later, use measurement_count */
                        move r3, measurement_count
                        ld r3, r3, 0
```

Main program needs to initialize this variable before ULP program is started. Build system makes this possible by generating a `${ULP_APP_NAME}.h` and `${ULP_APP_NAME}.ld` files which define global symbols present in the ULP program. This files include each global symbol defined in the ULP program, prefixed with `ulp_`.

The header file contains declaration of the symbol:

```
extern uint32_t ulp_measurement_count;
```

Note that all symbols (variables, arrays, functions) are declared as `uint32_t`. For functions and arrays, take address of the symbol and cast to the appropriate type.

The generated linker script file defines locations of symbols in RTC_SLOW_MEM:

```
PROVIDE ( ulp_measurement_count = 0x50000060 );
```

To access ULP program variables from the main program, include the generated header file and use variables as one normally would:

```
#include "ulp_app_name.h"

// later
void init_ulp_vars() {
    ulp_measurement_count = 64;
}
```

Note that ULP program can only use lower 16 bits of each 32-bit word in RTC memory, because the registers are 16-bit, and there is no instruction to load from high part of the word.

Likewise, ULP store instruction writes register value into the lower 16 bit part of the 32-bit word. Upper 16 bits are written with a value which depends on the address of the store instruction, so when reading variables written by the ULP, main application needs to mask upper 16 bits, e.g.:

```
printf("Last measurement value: %d\n", ulp_last_measurement & UINT16_MAX);
```

5.17.4 Starting the ULP program

To run a ULP program, main application needs to load the ULP program into RTC memory using `ulp_load_binary` function, and then start it using `ulp_run` function.

Note that "Enable Ultra Low Power (ULP) Coprocessor" option must be enabled in menuconfig in order to reserve memory for the ULP. "RTC slow memory reserved for coprocessor" option must be set to a value sufficient to store ULP code and data. If the application components contain multiple ULP programs, then the size of the RTC memory must be sufficient to hold the largest one.

Each ULP program is embedded into the ESP-IDF application as a binary blob. Application can reference this blob and load it in the following way (suppose ULP_APP_NAME was defined to `ulp_app_name`:

```
extern const uint8_t bin_start[] asm("_binary_ulp_app_name_bin_start");
extern const uint8_t bin_end[]   asm("_binary_ulp_app_name_bin_end");
```

(下页继续)

(续上页)

```
void start_ulp_program() {
    ESP_ERROR_CHECK( ulp_load_binary(
        0 /* load address, set to 0 when using default linker scripts */,
        bin_start,
        (bin_end - bin_start) / sizeof(uint32_t)) );
}
```

esp_err_t **ulp_load_binary**(uint32_t *load_addr*, **const** uint8_t **program_binary*, size_t *program_size*)

Load ULP program binary into RTC memory.

ULP program binary should have the following format (all values little-endian):

1. MAGIC, (value 0x00706c75, 4 bytes)
2. TEXT_OFFSET, offset of .text section from binary start (2 bytes)
3. TEXT_SIZE, size of .text section (2 bytes)
4. DATA_SIZE, size of .data section (2 bytes)
5. BSS_SIZE, size of .bss section (2 bytes)
6. (TEXT_OFFSET - 12) bytes of arbitrary data (will not be loaded into RTC memory)
7. .text section
8. .data section

Linker script in components/ulp/ld/esp32.ulp.ld produces ELF files which correspond to this format. This linker script produces binaries with load_addr == 0.

Return

- ESP_OK on success
- ESP_ERR_INVALID_ARG if load_addr is out of range
- ESP_ERR_INVALID_SIZE if program_size doesn' t match (TEXT_OFFSET + TEXT_SIZE + DATA_SIZE)
- ESP_ERR_NOT_SUPPORTED if the magic number is incorrect

Parameters

- `load_addr`: address where the program should be loaded, expressed in 32-bit words
- `program_binary`: pointer to program binary
- `program_size`: size of the program binary

Once the program is loaded into RTC memory, application can start it, passing the address of the entry point to `ulp_run` function:

```
ESP_ERROR_CHECK( ulp_run(&ulp_entry - RTC_SLOW_MEM) );
```

esp_err_t **ulp_run**(uint32_t *entry_point*)

Run the program loaded into RTC memory.

Return ESP_OK on success

Parameters

- `entry_point`: entry point, expressed in 32-bit words

Declaration of the entry point symbol comes from the above mentioned generated header file, `${ULP_APP_NAME}.h`. In assembly source of the ULP application, this symbol must be marked as `.global`:

```
        .global entry
entry:
        /* code starts here */
```

5.17.5 ULP program flow

ULP coprocessor is started by a timer. The timer is started once `ulp_run` is called. The timer counts a number of RTC_SLOW_CLK ticks (by default, produced by an internal 150kHz RC oscillator). The number of ticks is set using `SENS_ULP_CP_SLEEP_CYCx_REG` registers (x = 0..4). When starting the ULP for the first time, `SENS_ULP_CP_SLEEP_CYC0_REG` will be used to set the number of timer ticks. Later the ULP program can select another `SENS_ULP_CP_SLEEP_CYCx_REG` register using `sleep` instruction.

The application can set ULP timer period values (SENS_ULP_CP_SLEEP_CYCx_REG, x = 0..4) using `ulp_set_wakeup_period` function.

esp_err_t **ulp_set_wakeup_period**(size_t *period_index*, uint32_t *period_us*)

Set one of ULP wakeup period values.

ULP coprocessor starts running the program when the wakeup timer counts up to a given value (called period). There are 5 period values which can be programmed into SENS_ULP_CP_SLEEP_CYCx_REG registers, x = 0..4. By default, wakeup timer will use the period set into SENS_ULP_CP_SLEEP_CYC0_REG, i.e. period number 0. ULP program code can use SLEEP instruction to select which of the SENS_ULP_CP_SLEEP_CYCx_REG should be used for subsequent wakeups.

However, please note that SLEEP instruction issued (from ULP program) while the system is in deep sleep mode does not have effect, and sleep cycle count 0 is used.

Note The ULP FSM requires two clock cycles to wakeup before being able to run the program. Then additional 16 cycles are reserved after wakeup waiting until the 8M clock is stable. The FSM also requires two more clock cycles to go to sleep after the program execution is halted. The minimum wakeup period that may be set up for the ULP is equal to the total number of cycles spent on the above internal tasks. For a default configuration of the ULP running at 150kHz it makes about 133us.

Return

- ESP_OK on success
- ESP_ERR_INVALID_ARG if period_index is out of range

Parameters

- `period_index`: wakeup period setting number (0 - 4)
- `period_us`: wakeup period, us

Once the timer counts the number of ticks set in the selected `SENS_ULP_CP_SLEEP_CYCx_REG` register, ULP coprocessor powers up and starts running the program from the entry point set in the call to `ulp_run`.

The program runs until it encounters a `halt` instruction or an illegal instruction. Once the program halts, ULP coprocessor powers down, and the timer is started again.

To disable the timer (effectively preventing the ULP program from running again), clear the `RTC_CNTL_ULP_CP_SLP_TIMER_EN` bit in the `RTC_CNTL_STATE0_REG` register. This can be done both from ULP code and from the main program.

5.18 ESP32 中的单元测试

[English]

ESP-IDF 中附带了一个基于 `Unity` 的单元测试应用程序框架，且所有的单元测试用例分别保存在 ESP-IDF 仓库中每个组件的 `test` 子目录中。

5.18.1 添加常规测试用例

单元测试被添加在相应组件的 `test` 子目录中，测试用例写在 C 文件中，一个 C 文件可以包含多个测试用例。测试文件的名字要以“test”开头。

测试文件需要包含 `unity.h` 头文件，此外还需要包含待测试 C 模块需要的头文件。

测试用例需要通过 C 文件中特定的函数来添加，如下所示：

```
TEST_CASE("test name", "[module name]"
{
```

(下页继续)

(续上页)

```
        // 在这里添加测试用例
}
```

- 第一个参数是字符串，用来描述当前测试。
- 第二个参数是字符串，用方括号中的标识符来表示，标识符用来对相关测试或具有特定属性的测试进行分组。

没有必要在每个测试用例中使用 UNITY_BEGIN() 和 UNITY_END() 来声明主函数的区域，unity_platform.c 会自动调用 UNITY_BEGIN()，然后运行测试用例，最后调用 UNITY_END()。

每一个测试子目录下都应该包含一个 component.mk，并且里面至少要包含如下的一行内容：

```
COMPONENT_ADD_LDFLAGS = -Wl,--whole-archive -l$(COMPONENT_NAME) -Wl,--no-whole-archive
```

更多关于如何在 Unity 下编写测试用例的信息，请查阅 http://www.throwtheswitch.org/unity 。

5.18.2 添加多设备测试用例

常规测试用例会在一个 DUT（Device Under Test，在试设备）上执行，那些需要互相通信的组件（比如 GPIO，SPI…）不能使用常规测试用例进行测试。多设备测试用例支持使用多个 DUT 进行写入和运行测试。

以下是一个多设备测试用例：

```
void gpio_master_test()
{
    gpio_config_t slave_config = {
            .pin_bit_mask = 1 << MASTER_GPIO_PIN,
            .mode = GPIO_MODE_INPUT,
    };
    gpio_config(&slave_config);
    unity_wait_for_signal("output high level");
    TEST_ASSERT(gpio_get_level(MASTER_GPIO_PIN) == 1);
}

void gpio_slave_test()
{
    gpio_config_t master_config = {
            .pin_bit_mask = 1 << SLAVE_GPIO_PIN,
            .mode = GPIO_MODE_OUTPUT,
    };
    gpio_config(&master_config);
    gpio_set_level(SLAVE_GPIO_PIN, 1);
```

(下页继续)

(续上页)

```
    unity_send_signal("output high level");
}

TEST_CASE_MULTIPLE_DEVICES("gpio multiple devices test example", "[driver]", gpio_master_
↪test, gpio_slave_test);
```

宏 TEST_CASE_MULTIPLE_DEVICES 用来声明多设备测试用例，

- 第一个参数指定测试用例的名字。
- 第二个参数是测试用例的描述。
- 从第三个参数开始，可以指定最多 5 个测试函数，每个函数都是单独运行在一个 DUT 上的测试入口点。

在不同的 DUT 上运行的测试用例，通常会要求它们之间进行同步。我们提供 unity_wait_for_signal 和 unity_send_signal 这两个函数来使用 UART 去支持同步操作。如上例中的场景，slave 应该在在 master 设置好 GPIO 电平后再去读取 GPIO 电平，DUT 的 UART 终端会打印提示信息，并要求用户进行交互。

DUT1（master）终端：

```
Waiting for signal: [output high level]!
Please press "Enter" key once any board send this signal.
```

DUT2（slave）终端：

```
Send signal: [output high level]!
```

一旦 DUT2 发送了该信号，您需要在 DUT2 的终端输入回车，然后 DUT1 会从 unity_wait_for_signal 函数中解除阻塞，并开始更改 GPIO 的电平。

信号也可以用来在不同 DUT 之间传递参数。例如，DUT1 希望能够拿到 DUT2 的 MAC 地址，来进行蓝牙连接。这时，我们可以使用 unity_wait_for_signal_param 以及 unity_send_signal_param。

DUT1 终端:

```
Waiting for signal: [dut2 mac address]!
Please input parameter value from any board send this signal and press "Enter" key.
```

DUT2 终端:

```
Send signal: [dut2 mac address][10:20:30:40:50:60]!
```

一旦 DUT2 发送信号，您需要在 DUT1 输入 10:20:30:40:50:60 及回车，然后 DUT1 会从 unity_wait_for_signal_param 中获取到蓝牙地址的字符串，并解除阻塞开始蓝牙连接。

5.18.3 添加多阶段测试用例

常规的测试用例无需重启就会结束（或者仅需要检查是否发生了重启），可有些时候我们想在某些特定类型的重启事件后运行指定的测试代码，例如，我们想在深度睡眠唤醒后检查复位的原因是否正确。首先我们需要出发深度睡眠复位事件，然后检查复位的原因。为了实现这一点，我们可以定义多阶段测试用例来将这些测试函数组合在一起。

```
static void trigger_deepsleep(void)
{
    esp_sleep_enable_timer_wakeup(2000);
    esp_deep_sleep_start();
}

void check_deepsleep_reset_reason()
{
    RESET_REASON reason = rtc_get_reset_reason(0);
    TEST_ASSERT(reason == DEEPSLEEP_RESET);
}

TEST_CASE_MULTIPLE_STAGES("reset reason check for deepsleep", "[esp32]", trigger_
↪deepsleep, check_deepsleep_reset_reason);
```

多阶段测试用例向用户呈现了一组测试函数，它需要用户进行交互（选择用例并选择不同的阶段）来运行。

5.18.4 编译单元测试程序

按照 esp-idf 顶层目录的 README 文件中的说明进行操作，请确保 IDF_PATH 环境变量已经被设置指向了 esp-idf 的顶层目录。

切换到 tools/unit-test-app 目录下进行配置和编译：

- make menuconfig - 配置单元测试程序。
- make TESTS_ALL=1 - 编译单元测试程序，测试每个组件 test 子目录下的用例。
- make TEST_COMPONENTS='xxx' - 编译单元测试程序，测试指定的组件。
- make TESTS_ALL=1 TEST_EXCLUDE_COMPONENTS='xxx' - 编译单元测试程序，测试所有（除开指定）的组件。例如 make TESTS_ALL=1 TEST_EXCLUDE_COMPONENTS='ulp mbedtls' - 编译所有的单元测试，不包括 ulp 和 mbedtls 组件。

当编译完成时，它会打印出烧写芯片的指令。您只需要运行 make flash 即可烧写所有编译输出的文件。

您还可以运行 make flash TESTS_ALL=1 或者 make TEST_COMPONENTS='xxx' 来编译并烧写，所有需要的文件都会在烧写之前自动重新编译。

使用 menuconfig 可以设置烧写测试程序所使用的串口。

5.18.5 运行单元测试

烧写完成后重启 ESP32，它将启动单元测试程序。

当单元测试应用程序空闲时，输入回车键，它会打印出测试菜单，其中包含所有的测试项目。

```
Here's the test menu, pick your combo:
(1)     "esp_ota_begin() verifies arguments" [ota]
(2)     "esp_ota_get_next_update_partition logic" [ota]
(3)     "Verify bootloader image in flash" [bootloader_support]
(4)     "Verify unit test app image" [bootloader_support]
(5)     "can use new and delete" [cxx]
(6)     "can call virtual functions" [cxx]
(7)     "can use static initializers for non-POD types" [cxx]
(8)     "can use std::vector" [cxx]
(9)     "static initialization guards work as expected" [cxx]
(10)    "global initializers run in the correct order" [cxx]
(11)    "before scheduler has started, static initializers work correctly" [cxx]
(12)    "adc2 work with wifi" [adc]
(13)    "gpio master/slave test example" [ignore][misc][test_env=UT_T2_1][multi_device]
        (1)     "gpio_master_test"
        (2)     "gpio_slave_test"
(14)    "SPI Master clockdiv calculation routines" [spi]
(15)    "SPI Master test" [spi][ignore]
(16)    "SPI Master test, interaction of multiple devs" [spi][ignore]
(17)    "SPI Master no response when switch from host1 (HSPI) to host2 (VSPI)" [spi]
(18)    "SPI Master DMA test, TX and RX in different regions" [spi]
(19)    "SPI Master DMA test: length, start, not aligned" [spi]
(20)    "reset reason check for deepsleep" [esp32][test_env=UT_T2_1][multi_stage]
        (1)     "trigger_deepsleep"
        (2)     "check_deepsleep_reset_reason"
```

常规测试用例会打印用例名字和描述，主从测试用例还会打印子菜单（已注册的测试函数的名字）。

可以输入以下任意一项来运行测试用例：

- 引号中的测试用例的名字（例如 `"esp_ota_begin() verifies arguments"`），运行单个测试用例。
- 测试用例的序号（例如 `1`），运行单个测试用例。
- 方括号中的模块名字（例如 `[cxx]`），运行指定模块所有的测试用例。
- 星号 (`*`)，运行所有测试用例。

`[multi_device]` 和 `[multi_stage]` 标签告诉测试运行者该用例是多设备测试还是多阶段测试。这些标签由 `TEST_CASE_MULTIPLE_STAGES` 和 `TEST_CASE_MULTIPLE_DEVICES` 宏自动生成。

一旦选择了多设备测试用例，它会打印一个子菜单：

```
Running gpio master/slave test example...
gpio master/slave test example
        (1)     "gpio_master_test"
        (2)     "gpio_slave_test"
```

您需要输入数字以选择在 DUT 上运行的测试。

与多设备测试用例相似，多阶段测试用例也会打印子菜单：

```
Running reset reason check for deepsleep...
reset reason check for deepsleep
        (1)     "trigger_deepsleep"
        (2)     "check_deepsleep_reset_reason"
```

第一次执行此用例时，输入 1 来运行第一阶段（触发深度睡眠）。在重启 DUT 并再次选择运行此用例后，输入 2 来运行第二阶段。只有在最后一个阶段通过并且之前所有的阶段都成功触发了复位的情况下，该测试才算通过。

5.19 ESP32 中的单元测试 (CMake)

[English]

ESP-IDF 中附带了一个基于 Unity 的单元测试应用程序框架，且所有的单元测试用例分别保存在 ESP-IDF 仓库中每个组件的 test 子目录中。

5.19.1 添加常规测试用例

单元测试被添加在相应组件的 test 子目录中，测试用例写在 C 文件中，一个 C 文件可以包含多个测试用例。测试文件的名字要以“test”开头。

测试文件需要包含 unity.h 头文件，此外还需要包含待测试 C 模块需要的头文件。

测试用例需要通过 C 文件中特定的函数来添加，如下所示：

```
TEST_CASE("test name", "[module name]"
{
        // 在这里添加测试用例
}
```

- 第一个参数是字符串，用来描述当前测试。
- 第二个参数是字符串，用方括号中的标识符来表示，标识符用来对相关测试或具有特定属性的测试进行分组。

没有必要在每个测试用例中使用 UNITY_BEGIN() 和 UNITY_END() 来声明主函数的区域，unity_platform.c 会自动调用 UNITY_BEGIN()，然后运行测试用例，最后调用 UNITY_END()。

test 子目录需要包含：ref：组件 *CMakeLists.txt <component-directories-cmake>*，因为他们本身就是一种组件。ESP-IDF 使用了 unity 测试框架，需要将其指定为组件的依赖项。通常，组件：ref：需要手动指定待编译的源文件 *<cmake-file-globbing>*; 但是，对于测试组件来说，这个要求被放宽了，仅仅是建议使用“COMPONENT_SRCDIRS”。

总的来说，test 子目录下最简单的 CMakeLists.txt 文件可能如下所示:

```
set(COMPONENT_SRCDIRS ".")
set(COMPONENT_ADD_INCLUDEDIRS ".")
set(COMPONENT_REQUIRES unity)

register_component()
```

更多关于如何在 Unity 下编写测试用例的信息，请查阅 http://www.throwtheswitch.org/unity 。

5.19.2 添加多设备测试用例

常规测试用例会在一个 DUT（Device Under Test，在试设备）上执行，那些需要互相通信的组件（比如 GPIO，SPI…）不能使用常规测试用例进行测试。多设备测试用例支持使用多个 DUT 进行写入和运行测试。

以下是一个多设备测试用例:

```
void gpio_master_test()
{
    gpio_config_t slave_config = {
            .pin_bit_mask = 1 << MASTER_GPIO_PIN,
            .mode = GPIO_MODE_INPUT,
    };
    gpio_config(&slave_config);
    unity_wait_for_signal("output high level");
    TEST_ASSERT(gpio_get_level(MASTER_GPIO_PIN) == 1);
}

void gpio_slave_test()
{
    gpio_config_t master_config = {
            .pin_bit_mask = 1 << SLAVE_GPIO_PIN,
            .mode = GPIO_MODE_OUTPUT,
    };
    gpio_config(&master_config);
```

（下页继续）

(续上页)

```
    gpio_set_level(SLAVE_GPIO_PIN, 1);
    unity_send_signal("output high level");
}

TEST_CASE_MULTIPLE_DEVICES("gpio multiple devices test example", "[driver]", gpio_master_
↪test, gpio_slave_test);
```

宏 TEST_CASE_MULTIPLE_DEVICES 用来声明多设备测试用例，

- 第一个参数指定测试用例的名字。
- 第二个参数是测试用例的描述。
- 从第三个参数开始，可以指定最多 5 个测试函数，每个函数都是单独运行在一个 DUT 上的测试入口点。

在不同的 DUT 上运行的测试用例，通常会要求它们之间进行同步。我们提供 unity_wait_for_signal 和 unity_send_signal 这两个函数来使用 UART 去支持同步操作。如上例中的场景，slave 应该在在 master 设置好 GPIO 电平后再去读取 GPIO 电平，DUT 的 UART 终端会打印提示信息，并要求用户进行交互。

DUT1（master）终端：

```
Waiting for signal: [output high level]!
Please press "Enter" key once any board send this signal.
```

DUT2（slave）终端：

```
Send signal: [output high level]!
```

一旦 DUT2 发送了该信号，您需要在 DUT2 的终端输入回车，然后 DUT1 会从 unity_wait_for_signal 函数中解除阻塞，并开始更改 GPIO 的电平。

5.19.3 添加多阶段测试用例

常规的测试用例无需重启就会结束（或者仅需要检查是否发生了重启），可有些时候我们想在某些特定类型的重启事件后运行指定的测试代码，例如，我们想在深度睡眠唤醒后检查复位的原因是否正确。首先我们需要出发深度睡眠复位事件，然后检查复位的原因。为了实现这一点，我们可以定义多阶段测试用例来将这些测试函数组合在一起。

```
static void trigger_deepsleep(void)
{
    esp_sleep_enable_timer_wakeup(2000);
    esp_deep_sleep_start();
}
```

(下页继续)

(续上页)

```
void check_deepsleep_reset_reason()
{
    RESET_REASON reason = rtc_get_reset_reason(0);
    TEST_ASSERT(reason == DEEPSLEEP_RESET);
}

TEST_CASE_MULTIPLE_STAGES("reset reason check for deepsleep", "[esp32]", trigger_
↪deepsleep, check_deepsleep_reset_reason);
```

多阶段测试用例向用户呈现了一组测试函数，它需要用户进行交互（选择用例并选择不同的阶段）来运行。

5.19.4 编译单元测试程序

按照 esp-idf 顶层目录的 README 文件中的说明进行操作，请确保 `IDF_PATH` 环境变量已经被设置指向了 esp-idf 的顶层目录。

切换到 `tools/unit-test-app` 目录下进行配置和编译：

- `idf.py menuconfig` - 配置单元测试程序。
- `idf.py build -T all` - 编译单元测试程序，测试每个组件 `test` 子目录下的用例。
- `idf.py build -T xxx` - 编译单元测试程序，测试指定的组件。
- `idf.py build -T all -E xxx` - 编译单元测试程序，测试所有（除开指定）的组件。例如 `idf.py build -T all -E ulp mbedtls` - 编译所有的单元测试，不包括 `ulp` 和 `mbedtls` 组件。

当编译完成时，它会打印出烧写芯片的指令。您只需要运行 `idf.py flash` 即可烧写所有编译输出的文件。

您还可以运行 `idf.py flash -T all` 或者 `idf.py flash -T xxx` 来编译并烧写，所有需要的文件都会在烧写之前自动重新编译。

使用 `menuconfig` 可以设置烧写测试程序所使用的串口。

5.19.5 运行单元测试

烧写完成后重启 ESP32，它将启动单元测试程序。

当单元测试应用程序空闲时，输入回车键，它会打印出测试菜单，其中包含所有的测试项目。

```
Here's the test menu, pick your combo:
(1)     "esp_ota_begin() verifies arguments" [ota]
(2)     "esp_ota_get_next_update_partition logic" [ota]
(3)     "Verify bootloader image in flash" [bootloader_support]
```

(下页继续)

(续上页)

```
(4)     "Verify unit test app image" [bootloader_support]
(5)     "can use new and delete" [cxx]
(6)     "can call virtual functions" [cxx]
(7)     "can use static initializers for non-POD types" [cxx]
(8)     "can use std::vector" [cxx]
(9)     "static initialization guards work as expected" [cxx]
(10)    "global initializers run in the correct order" [cxx]
(11)    "before scheduler has started, static initializers work correctly" [cxx]
(12)    "adc2 work with wifi" [adc]
(13)    "gpio master/slave test example" [ignore][misc][test_env=UT_T2_1][multi_device]
        (1)     "gpio_master_test"
        (2)     "gpio_slave_test"
(14)    "SPI Master clockdiv calculation routines" [spi]
(15)    "SPI Master test" [spi][ignore]
(16)    "SPI Master test, interaction of multiple devs" [spi][ignore]
(17)    "SPI Master no response when switch from host1 (HSPI) to host2 (VSPI)" [spi]
(18)    "SPI Master DMA test, TX and RX in different regions" [spi]
(19)    "SPI Master DMA test: length, start, not aligned" [spi]
(20)    "reset reason check for deepsleep" [esp32][test_env=UT_T2_1][multi_stage]
        (1)     "trigger_deepsleep"
        (2)     "check_deepsleep_reset_reason"
```

常规测试用例会打印用例名字和描述，主从测试用例还会打印子菜单（已注册的测试函数的名字）。

可以输入以下任意一项来运行测试用例：

- 引号中的测试用例的名字，运行单个测试用例。
- 测试用例的序号，运行单个测试用例。
- 方括号中的模块名字，运行指定模块所有的测试用例。
- 星号，运行所有测试用例。

[multi_device] 和 [multi_stage] 标签告诉测试运行者该用例是多设备测试还是多阶段测试。这些标签由 TEST_CASE_MULTIPLE_STAGES 和 TEST_CASE_MULTIPLE_DEVICES 宏自动生成。

一旦选择了多设备测试用例，它会打印一个子菜单：

```
Running gpio master/slave test example...
gpio master/slave test example
        (1)     "gpio_master_test"
        (2)     "gpio_slave_test"
```

您需要输入数字以选择在 DUT 上运行的测试。

与多设备测试用例相似，多阶段测试用例也会打印子菜单：

```
Running reset reason check for deepsleep...
reset reason check for deepsleep
        (1)     "trigger_deepsleep"
        (2)     "check_deepsleep_reset_reason"
```

第一次执行此用例时，输入 1 来运行第一阶段（触发深度睡眠）。在重启 DUT 并再次选择运行此用例后，输入 2 来运行第二阶段。只有在最后一个阶段通过并且之前所有的阶段都成功触发了复位的情况下，该测试才算通过。

5.20 控制台终端

[English]

ESP-IDF 提供了 `console` 组件，它包含了开发基于串口的交互式控制终端所需要的所有模块，主要支持以下功能：

- 行编辑，由 linenoise 库具体实现，它支持处理退格键和方向键，支持回看命令的历史记录，支持命令的自动补全和参数提示。
- 将命令行拆分为参数列表。
- 参数解析，由 argtable3 库具体实现，它支持解析 GNU 样式的命令行参数。
- 用于注册和调度命令的函数。

这些功能模块可以一起使用也可以独立使用，例如仅使用行编辑和命令注册的功能，然后使用 `getopt` 函数或者自定义的函数来实现参数解析，而不是直接使用 argtable3 库。同样地，还可以使用更简单的命令输入方法（比如 `fgets` 函数）和其他用于命令分割和参数解析的方法。

5.20.1 行编辑

行编辑功能允许用户通过按键输入来编辑命令，使用退格键删除符号，使用左/右键在命令中移动光标，使用上/下键导航到之前输入的命令，使用制表键（“Tab”）来自动补全命令。

注解： 此功能依赖于终端应用程序对 ANSI 转移符的支持，显示原始 UART 数据的串口监视器不能与行编辑库一同使用。如果运行 get_started/console 示例程序的时候观察到的输出结果是 `[6n` 或者类似的转义字符而不是命令行提示符 `[esp32]>` 时，就表明当前的串口监视器不支持 ANSI 转移字符。已知可用的串口监视程序有 GNU screen，minicom 和 idf_monitor.py（可以通过在项目目录下执行 `make monitor` 来调用）。

前往这里可以查看 linenoise 库提供的所有函数的描述。

配置

Linenoise 库不需要显式地初始化，但是在调用行编辑函数之前，可能需要对某些配置的默认值稍作修改。

`linenoiseClearScreen`

使用转移字符清除终端屏幕，并将光标定位在左上角。

`linenoiseSetMultiLine`

在单行和多行编辑模式之间进行切换。单行模式下，如果命令的长度超过终端的宽度，会在行内滚动命令文本以显示文本的结尾，在这种情况下，文本的开头部分会被隐藏。单行模式在每次按下按键时发送给屏幕刷新的数据比较少，与多行模式相比更不容易发生故障。另一方面，在单行模式下编辑命令和复制命令将变得更加困难。默认情况下开启的是单行模式。

主循环

`linenoise`

在大多数情况下，控制台应用程序都会具有相同的工作形式——在某个循环中不断读取输入的内容，然后解析再处理。`linenoise` 是专门用来获取用户按键输入的函数，当回车键被按下后会便返回完整的一行内容。因此可以用它来完成前面循环中的“读取”任务。

`linenoiseFree`

必须调用此函数才能释放从 `linenoise` 函数获取的命令行缓冲。

提示和补全

`linenoiseSetCompletionCallback`

当用户按下制表键时，linenoise 会调用 **补全回调函数**，该回调函数会检查当前已经输入的内容，然后调用 `linenoiseAddCompletion` 函数来提供所有可能的补全后的命令列表。启用补全功能，需要事先调用 `linenoiseSetCompletionCallback` 函数来注册补全回调函数。

`console` 组件提供了一个现成的函数来为注册的命令提供补全功能 `esp_console_get_completion`（见后文）。

`linenoiseAddCompletion`

补全回调函数会通过调用此函数来通知 linenoise 库当前键入命令所有可能的补全结果。

`linenoiseSetHintsCallback`

每当用户的输入改变时，linenoise 就会调用此回调函数，检查到目前为止输入的命令行内容，然后提供带有提示信息的字符串（例如命令参数列表），然后会在同一行上用不同的颜色显示出该文本。

`linenoiseSetFreeHintsCallback`

如果 **提示回调函数**返回的提示字符串是动态分配的或者需要以其它方式回收，就需要使用 `linenoiseSetFreeHintsCallback` 注册具体的清理函数。

历史记录

`linenoiseHistorySetMaxLen`

该函数设置要保留在内存中的最近输入的命令的数量。用户通过使用向上/向下箭头来导航历史记录。

`linenoiseHistoryAdd`

Linenoise 不会自动向历史记录中添加命令，应用程序需要调用此函数来将命令字符串添加到历史记录中。

`linenoiseHistorySave`

该函数将命令的历史记录从 RAM 中保存为文本文件，例如保存到 SD 卡或者 Flash 的文件系统中。

`linenoiseHistoryLoad`

与 `linenoiseHistorySave` 相对应，从文件中加载历史记录。

`linenoiseHistoryFree`

释放用于存储命令历史记录的内存。当使用完 linenoise 库后需要调用此函数。

5.20.2 将命令行拆分成参数列表

`console` 组件提供 `esp_console_split_argv` 函数来将命令行字符串拆分为参数列表。该函数会返回参数的数量（`argc`）和一个指针数组，该指针数组可以作为 `argv` 参数传递给任何接受 `argc`，`argv` 格式参数的函数。

根据以下规则来将命令行拆分成参数列表：

- 参数由空格分隔
- 如果参数本身需要使用空格，可以使用 `\`（反斜杠）对它们进行转义
- 其它能被识别的转义字符有 `\\`（显示反斜杠本身）和 `\"`（显示双引号）
- 可以使用双引号来引用参数，引号只可能出现在参数的开头和结尾。参数中的引号必须如上所述进行转移。参数周围的引号会被 `esp_console_split_argv` 函数删除

示例：

- `abc def 1 20 .3` [`abc`, `def`, `1`, `20`, `.3`]
- `abc "123 456" def` [`abc`, `123 456`, `def`]
- `` `a\ b\\c\" `` [`a b\c"`]

5.20.3 参数解析

对于参数解析，`console` 组件使用 argtable3 库。有关 argtable3 的介绍请查看 教程 或者 Github 仓库中的 示例代码 。

5.20.4 命令的注册与调度

`console` 组件包含了一些工具函数，用来注册命令，将用户输入的命令和已经注册的命令进行匹配，使用命令行输入的参数调用命令。

应用程序首先调用 `esp_console_init` 来初始化命令注册模块，然后调用 `esp_console_cmd_register` 函数注册命令处理程序。

对于每个命令，应用程序需要提供以下信息（需要以 `esp_console_cmd_t` 结构体的形式给出）：

- 命令名字（不含空格的字符串）
- 帮助文档，解释该命令的用途
- 可选的提示文本，列出命令的参数。如果应用程序使用 `Argtable3` 库来解析参数，则可以通过提供指向 argtable 参数定义结构体的指针来自动生成提示文本
- 命令处理函数

命令注册模块还提供了其它函数：

`esp_console_run`

> 该函数接受命令行字符串，使用 `esp_console_split_argv` 函数将其拆分为 argc/argv 形式的参数列表，在已经注册的组件列表中查找命令，如果找到，则执行其对应的处理程序。

`esp_console_register_help_command`

> 将 `help` 命令添加到已注册命令列表中，此命令将会以列表的方式打印所有注册的命令及其参数和帮助文本。

`esp_console_get_completion`

> 与 linenoise 库中的 `linenoiseSetCompletionCallback` 一同使用的回调函数，根据已经注册的命令列表为 linenoise 提供补全功能。

`esp_console_get_hint`

> 与 linenoise 库中 `linenoiseSetHintsCallback` 一同使用的回调函数，为 linenoise 提供已经注册的命令的参数提示功能。

5.20.5 示例

`examples/system/console` 目录下提供了 `console` 组件的示例应用程序，展示了具体的使用方法。该示例介绍了如何初始化 UART 和 VFS 的功能，设置 linenoise 库，从 UART 中读取命令并加以处理，然后将历

史命令存储到 Flash 中。更多信息，请参阅示例代码目录中的 README.md 文件。

5.21 ESP32 ROM console

When an ESP32 is unable to boot from flash ROM (and the fuse disabling it hasn' t been blown), it boots into a rom console. The console is based on TinyBasic, and statements entered should be in the form of BASIC statements. As is common in the BASIC language, without a preceeding line number, commands entered are executed immediately; lines with a prefixed line number are stored as part of a program.

5.21.1 Full list of supported statements and functions

System

- BYE - *exits Basic, reboots ESP32, retries booting from flash*
- END - *stops execution from the program, also "STOP"*
- MEM - *displays memory usage statistics*
- NEW - *clears the current program*
- RUN - *executes the current program*

IO, Documentation

- PEEK(address) - *get a 32-bit value from a memory address*
- POKE - *write a 32-bit value to memory*
- USR(addr, arg1, ..) - *Execute a machine language function*
- PRINT expression - *print out the expression, also "?"*
- PHEX expression - *print expression as a hex number*
- REM stuff - *remark/comment, also "'"*

Expressions, Math

- A=V, LET A=V - *assign value to a variable*
- +, -, *, / - *Math*
- <,<=,=,<>,!=,>=,> - *Comparisons*
- ABS(expression) - *returns the absolute value of the expression*
- RSEED(v) - *sets the random seed to v*

- RND(m) - *returns a random number from 0 to m*
- A=1234 - * Assign a decimal value*
- A=&h1A2 - * Assign a hex value*
- A=&b1001 - *Assign a binary value*

Control

- IF expression statement - *perform statement if expression is true*
- FOR variable = start TO end - *start for block*
- FOR variable = start TO end STEP value - *start for block with step*
- NEXT - *end of for block*
- GOTO linenumber - *continue execution at this line number*
- GOSUB linenumber - *call a subroutine at this line number*
- RETURN - *return from a subroutine*
- DELAY - *Delay a given number of milliseconds*

Pin IO

- IODIR - *Set a GPIO-pin as an output (1) or input (0)*
- IOSET - *Set a GPIO-pin, configured as output, to high (1) or low (0)*
- IOGET - *Get the value of a GPIO-pin*

5.21.2 Example programs

Here are a few example commands and programs to get you started…

Read UART_DATE register of uart0

```
> PHEX PEEK(&h3FF40078)
15122500
```

Set GPIO2 using memory writes to GPIO_OUT_REG

Note: you can do this easier with the IOSET command

```
> POKE &h3FF44004,PEEK(&h3FF44004) OR &b100
```

Get value of GPIO0

```
> IODIR 0,0
> PRINT IOGET(0)
0
```

Blink LED

Hook up an LED between GPIO2 and ground. When running the program, the LED should blink 10 times.

```
10 IODIR 2,1
20 FOR A=1 TO 10
30 IOSET 2,1
40 DELAY 250
50 IOSET 2,0
60 DELAY 250
70 NEXT A
RUN
```

5.21.3 Credits

The ROM console is based on "TinyBasicPlus" by Mike Field and Scott Lawrence, which is based on "68000 TinyBasic" by Gordon Brandly

5.22 RF calibration

ESP32 supports three RF calibration methods during RF initialization:

1. Partial calibration
2. Full calibration
3. No calibration

5.22.1 Partial calibration

During RF initialization, the partial calibration method is used by default for RF calibration. It is done based on the full calibration data which is stored in the NVS. To use this method, please go to `menuconfig`

and enable *CONFIG_ESP32_PHY_CALIBRATION_AND_DATA_STORAGE*.

5.22.2 Full calibration

Full calibration is triggered in the follwing conditions:

1. NVS does not exist.
2. The NVS partition to store calibration data is erased.
3. Hardware MAC address is changed.
4. PHY library version is changed.
5. The RF calibration data loaded from the NVS partition is broken.

It takes about 100ms more than partial calibration. If boot duration is not critical, it is suggested to use the full calibration method. To switch to the full calibration method, go to `menuconfig` and disable *CONFIG_ESP32_PHY_CALIBRATION_AND_DATA_STORAGE*. If you use the default method of RF calibration, there are two ways to add the function of triggering full calibration as a last-resort remedy.

1. Erase the NVS partition if you don' t mind all of the data stored in the NVS partition is erased. That is indeed the easiest way.
2. Call API `esp_phy_erase_cal_data_in_nvs()` before initializing WiFi and BT/BLE based on some conditions (e.g. an option provided in some diagnostic mode). In this case, only phy namespace of the NVS partition is erased.

5.22.3 No calibration

No calibration method is only used when ESP32 wakes up from deep sleep.

5.22.4 PHY initialization data

The PHY initialization data is used for RF calibration. There are two ways to get the PHY initialization data.

One is the default initialization data which is located in the header file components/esp32/phy_init_data.h. It is embedded into the application binary after compiling and then stored into read-only memory (DROM). To use the default initialization data, please go to `menuconfig` and disable *CONFIG_ESP32_PHY_INIT_DATA_IN_PARTITION*.

Another is the initialization data which is stored in a partition. When using a custom partition table, make sure that PHY data partition is included (type: *data*, subtype: *phy*). With default partition table, this is done automatically. If initialization data is stored in a partition, it has to be flashed there, otherwise runtime error will occur. To switch to the initialization data stored in a partition, go to `menuconfig` and enable *CONFIG_ESP32_PHY_INIT_DATA_IN_PARTITION*.

5.23 Wi-Fi Driver

5.23.1 ESP32 Wi-Fi Feature List

- Support Station-only mode, AP-only mode, Station/AP-coexistence mode
- Support IEEE-802.11B, IEEE-802.11G, IEEE802.11N and APIs to configure the protocol mode
- Support WPA/WPA2/WPA2-Enterprise and WPS
- Support AMPDU, HT40, QoS and other key features
- Support Modem-sleep
- Support an Espressif-specific protocol which, in turn, supports up to **1 km** of data traffic
- Up to 20 MBit/sec TCP throughput and 30 MBit/sec UDP throughput over the air
- Support Sniffer
- Support set fast_crypto algorithm and normal algorithm switch which used in wifi connect
- Support both fast scan and all channel scan feature
- Support multiple antennas
- Support channel state information

5.23.2 How To Write a Wi-Fi Application

Preparation

Generally, the most effective way to begin your own Wi-Fi application is to select an example which is similar to your own application, and port the useful part into your project. It is not a MUST but it is strongly recommended that you take some time to read this article first, especially if you want to program a robust Wi-Fi application. This article is supplementary to the Wi-Fi APIs/Examples. It describes the principles of using the Wi-Fi APIs, the limitations of the current Wi-Fi API implementation, and the most common pitfalls in using Wi-Fi. This article also reveals some design details of the Wi-Fi driver. We recommend that you become familiar at least with the following sections: <*ESP32 Wi-Fi API Error Code*>, <*ESP32 Wi-Fi Programming Model*>, and <*ESP32 Wi-Fi Event Description*>.

Setting Wi-Fi Compile-time Options

Refer to <*Wi-Fi Menuconfig*>

Init Wi-Fi

Refer to <*ESP32 Wi-Fi Station General Scenario*>, <*ESP32 Wi-Fi AP General Scenario*>.

Start/Connect Wi-Fi

Refer to <*ESP32 Wi-Fi Station General Scenario*>, <*ESP32 Wi-Fi AP General Scenario*>.

Event-Handling

Generally, it is easy to write code in "sunny-day" scenarios, such as <*SYSTEM_EVENT_STA_START*>, <*SYSTEM_EVENT_STA_CONNECTED*> etc. The hard part is to write routines in "rainy-day"scenarios, such as <*SYSTEM_EVENT_STA_DISCONNECTED*> etc. Good handling of "rainy-day" scenarios is fundamental to robust Wi-Fi applications. Refer to <*ESP32 Wi-Fi Event Description*>, <*ESP32 Wi-Fi Station General Scenario*>, <*ESP32 Wi-Fi AP General Scenario*>

Write Error-Recovery Routines Correctly at All Times

Just like the handling of "rainy-day" scenarios, a good error-recovery routine is also fundamental to robust Wi-Fi applications. Refer to <*ESP32 Wi-Fi API Error Code*>

5.23.3 ESP32 Wi-Fi API Error Code

All of the ESP32 Wi-Fi APIs have well-defined return values, namely, the error code. The error code can b

- No errors, e.g. ESP_OK means that the API returns successfully
- Recoverable errors, such as ESP_ERR_NO_MEM, etc.
- Non-recoverable, non-critical errors
- Non-recoverable, critical errors

Whether the error is critical or not depends on the API and the application scenario, and it is defined by the API user.

The primary principle to write a robust application with Wi-Fi API is to always check the error code and write the error-handling code. Generally, the error-handling code can be used:

- for recoverable errors, in which case you can write a recoverable-error code. For example, when esp_wifi_start returns ESP_ERR_NO_MEM, the recoverable-error code vTaskDelay can be called, in order to get a microseconds' delay for another try.
- for non-recoverable, yet non-critical, errors, in which case printing the error code is a good method for error handling.
- for non-recoverable, critical errors, in which case "assert" may be a good method for error handling. For example, if esp_wifi_set_mode returns ESP_ERR_WIFI_NOT_INIT, it means that the Wi-Fi driver is not initialized by esp_wifi_init successfully. You can detect this kind of error very quickly in the application development phase.

In esp_err.h, ESP_ERROR_CHECK checks the return values. It is a rather commonplace error-handling code and can be used as the default error-handling code in the application development phase. However, we strongly recommend that API users write their own error-handling code.

5.23.4 ESP32 Wi-Fi API Parameter Initialization

When initializing struct parameters for the API, one of two approaches should be followed: - explicitly set all fields of the parameter or - use get API to get current configuration first, then set application specific fields

Initializing or getting the entire structure is very important because most of the time the value 0 indicates the default value is used. More fields may be added to the struct in the future and initializing these to zero ensures the application will still work correctly after IDF is updated to a new release.

5.23.5 ESP32 Wi-Fi Programming Model

The ESP32 Wi-Fi programming model is depicted as follows:

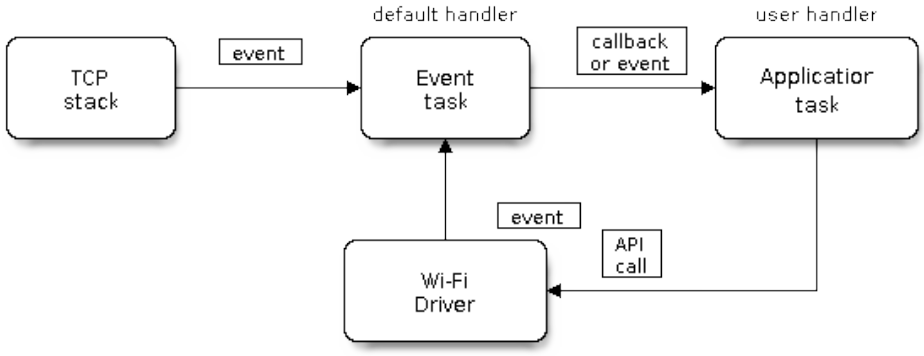

图 24: Wi-Fi Programming Model

The Wi-Fi driver can be considered a black box that knows nothing about high-layer code, such as the TCPIP stack, application task, event task, etc. All the Wi-Fi driver can do is receive API calls from the high layer, or post an event-queue to a specified queue which is initialized by API esp_wifi_init().

The event task is a daemon task which receives events from the Wi-Fi driver or from other subsystems, such as the TCPIP stack. The event task will call the default callback function upon receiving the event. For example, upon receiving SYSTEM_EVENT_STA_CONNECTED, it will call tcpip_adapter_start() to start the DHCP client in its default handler.

An application can register its own event callback function by using API esp_event_init. Then, the application callback function will be called after the default callback. Also, if the application does not want

to execute the callback in the event task, it needs to post the relevant event to the application task in the application callback function.

The application task (code) generally mixes all these things together: it calls APIs to initialize the system/Wi-Fi and handle the events when necessary.

5.23.6 ESP32 Wi-Fi Event Description

SYSTEM_EVENT_WIFI_READY

The Wi-Fi driver will never generate this event, which, as a result, can be ignored by the application event callback. This event may be removed in future releases.

SYSTEM_EVENT_SCAN_DONE

The scan-done event is triggered by esp_wifi_scan_start() and will arise in the following scenarios:

- The scan is completed, e.g., the target AP is found successfully, or all channels have been scanned.
- The scan is stopped by esp_wifi_scan_stop().
- The esp_wifi_scan_start() is called before the scan is completed. A new scan will override the current scan and a scan-done event will be generated.

The scan-done event will not arise in the following scenarios:

- It is a blocked scan.
- The scan is caused by esp_wifi_connect().

Upon receiving this event, the event task does nothing. The application event callback needs to call esp_wifi_scan_get_ap_num() and esp_wifi_scan_get_ap_records() to fetch the scanned AP list and trigger the Wi-Fi driver to free the internal memory which is allocated during the scan **(do not forget to do this)**! Refer to 'ESP32 Wi-Fi Scan' for a more detailed description.

SYSTEM_EVENT_STA_START

If esp_wifi_start() returns ESP_OK and the current Wi-Fi mode is Station or AP+Station, then this event will arise. Upon receiving this event, the event task will initialize the LwIP network interface (netif). Generally, the application event callback needs to call esp_wifi_connect() to connect to the configured AP.

SYSTEM_EVENT_STA_STOP

If esp_wifi_stop() returns ESP_OK and the current Wi-Fi mode is Station or AP+Station, then this event will arise. Upon receiving this event, the event task will release the station's IP address, stop the DHCP

client, remove TCP/UDP-related connections and clear the LwIP station netif, etc. The application event callback generally does not need to do anything.

SYSTEM_EVENT_STA_CONNECTED

If esp_wifi_connect() returns ESP_OK and the station successfully connects to the target AP, the connection event will arise. Upon receiving this event, the event task starts the DHCP client and begins the DHCP process of getting the IP address. Then, the Wi-Fi driver is ready for sending and receiving data. This moment is good for beginning the application work, provided that the application does not depend on LwIP, namely the IP address. However, if the application is LwIP-based, then you need to wait until the *got ip* event comes in.

SYSTEM_EVENT_STA_DISCONNECTED

This event can be generated in the following scenarios:

- When *esp_wifi_disconnect()*, or *esp_wifi_stop()*, or *esp_wifi_deinit()* is called and the station is already connected to the AP.
- When esp_wifi_connect() is called, but the Wi-Fi driver fails to set up a connection with the AP due to certain reasons, e.g. the scan fails to find the target AP, authentication times out, etc. If there are more than one AP with the same SSID, the disconnected event is raised after the station fails to connect all of the found APs.
- When the Wi-Fi connection is disrupted because of specific reasons, e.g., the station continuously loses N beacons, the AP kicks off the station, the AP' s authentication mode is changed, etc.

Upon receiving this event, the default behavior of the event task is: - Shuts down the station' s LwIP netif. - Notifies the LwIP task to clear the UDP/TCP connections which cause the wrong status to all sockets. For socket-based applications, the application callback can choose to close all sockets and re-create them, if necessary, upon receiving this event.

The most common event handle code for this event in application is to call esp_wifi_connect() to reconnect the Wi-Fi. However, if the event is raised because esp_wifi_disconnect() is called, the application should not call esp_wifi_connect() to reconnect. It' s application' s responsibility to distinguish whether the event is caused by esp_wifi_disconnect() or other reasons. Sometimes a better reconnect strategy is required, refer to <*Wi-Fi Reconnect*> and <*Scan When Wi-Fi Is Connecting*>.

Another thing deserves our attention is that the default behavior of LwIP is to abort all TCP socket connections on receiving the disconnect. Most of time it is not a problem. However, for some special application, this may not be what they want, consider following scenarios:

- The application creates a TCP connection to maintain the application-level keep-alive data that is sent out every 60 seconds.

- Due to certain reasons, the Wi-Fi connection is cut off, and the <SYSTEM_EVENT_STA_DISCONNECTED> is raised. According to the current implementation, all TCP connections will be removed and the keep-alive socket will be in a wrong status. However, since the application designer believes that the network layer should NOT care about this error at the Wi-Fi layer, the application does not close the socket.
- Five seconds later, the Wi-Fi connection is restored because esp_wifi_connect() is called in the application event callback function. **Moreover, the station connects to the same AP and gets the same IPV4 address as before**.
- Sixty seconds later, when the application sends out data with the keep-alive socket, the socket returns an error and the application closes the socket and re-creates it when necessary.

In above scenario, ideally, the application sockets and the network layer should not be affected, since the Wi-Fi connection only fails temporarily and recovers very quickly. The application can enable "Keep TCP connections when IP changed" via LwIP menuconfig.

SYSTEM_EVENT_STA_GOT_IP

This event arises when the DHCP client successfully gets the IPV4 address from the DHCP server, or when the IPV4 address is changed. The event means that everything is ready and the application can begin its tasks (e.g., creating sockets).

The IPV4 may be changed because of the following reasons:

- The DHCP client fails to renew/rebind the IPV4 address, and the station's IPV4 is reset to 0.
- The DHCP client rebinds to a different address.
- The static-configured IPV4 address is changed.

Whether the IPV4 address is changed or NOT is indicated by field "ip_change" of system_event_sta_got_ip_t.

The socket is based on the IPV4 address, which means that, if the IPV4 changes, all sockets relating to this IPV4 will become abnormal. Upon receiving this event, the application needs to close all sockets and recreate the application when the IPV4 changes to a valid one.

SYSTEM_EVENT_AP_STA_GOT_IP6

This event arises when the IPV6 SLAAC supports auto-configures an address for the ESP32, or when this address changes. The event means that everything is ready and the application can begin its tasks (e.g., creating sockets).

SYSTEM_EVENT_STA_LOST_IP

This event arises when the IPV4 address become invalid.

SYSTEM_EVENT_STA_LOST_IP doesn't arise immediately after the WiFi disconnects, instead it starts an IPV4 address lost timer, if the IPV4 address is got before ip lost timer expires, SYSTEM_EVENT_STA_LOST_IP doesn't happen. Otherwise, the event arises when IPV4 address lost timer expires.

Generally the application don't need to care about this event, it is just a debug event to let the application know that the IPV4 address is lost.

SYSTEM_EVENT_AP_START

Similar to <*SYSTEM_EVENT_STA_START*>.

SYSTEM_EVENT_AP_STOP

Similar to <*SYSTEM_EVENT_STA_STOP*>.

SYSTEM_EVENT_AP_STACONNECTED

Every time a station is connected to ESP32 AP, the <*SYSTEM_EVENT_AP_STACONNECTED*> will arise. Upon receiving this event, the event task will do nothing, and the application callback can also ignore it. However, you may want to do something, for example, to get the info of the connected STA, etc.

SYSTEM_EVENT_AP_STADISCONNECTED

This event can happen in the following scenarios:

- The application calls esp_wifi_disconnect(), or esp_wifi_deauth_sta(), to manually disconnect the station.
- The Wi-Fi driver kicks off the station, e.g. because the AP has not received any packets in the past five minutes, etc. The time can be modified by *esp_wifi_set_inactive_time()*.
- The station kicks off the AP.

When this event happens, the event task will do nothing, but the application event callback needs to do something, e.g., close the socket which is related to this station, etc.

SYSTEM_EVENT_AP_PROBEREQRECVED

This event is disabled by default. The application can enable it via API esp_wifi_set_event_mask(). When this event is enabled, it will be raised each time the AP receives a probe request.

5.23.7 ESP32 Wi-Fi Station General Scenario

Below is a "big scenario" which describes some small scenarios in Station mode:

1. Wi-Fi/LwIP Init Phase

- s1.1: The main task calls tcpip_adapter_init() to create an LwIP core task and initialize LwIP-related work.
- s1.2: The main task calls esp_event_loop_init() to create a system Event task and initialize an application event's callback function. In the scenario above, the application event's callback function does nothing but relaying the event to the application task.
- s1.3: The main task calls esp_wifi_init() to create the Wi-Fi driver task and initialize the Wi-Fi driver.
- s1.4: The main task calls OS API to create the application task.

Step 1.1~1.4 is a recommended sequence that initializes a Wi-Fi-/LwIP-based application. However, it is **NOT** a must-follow sequence, which means that you can create the application task in step 1.1 and put all other initializations in the application task. Moreover, you may not want to create the application task in the initialization phase if the application task depends on the sockets. Rather, you can defer the task creation until the IP is obtained.

2. Wi-Fi Configuration Phase

Once the Wi-Fi driver is initialized, you can start configuring the Wi-Fi driver. In this scenario, the mode is Station, so you may need to call esp_wifi_set_mode(WIFI_MODE_STA) to configure the Wi-Fi mode as Station. You can call other esp_wifi_set_xxx APIs to configure more settings, such as the protocol mode, country code, bandwidth, etc. Refer to <*ESP32 Wi-Fi Configuration*>.

Generally, we configure the Wi-Fi driver before setting up the Wi-Fi connection, but this is **NOT** mandatory, which means that you can configure the Wi-Fi connection anytime, provided that the Wi-Fi driver is initialized successfully. However, if the configuration does not need to change after the Wi-Fi connection is set up, you should configure the Wi-Fi driver at this stage, because the configuration APIs (such as esp_wifi_set_protocol) will cause the Wi-Fi to reconnect, which may not be desirable.

If the Wi-Fi NVS flash is enabled by menuconfig, all Wi-Fi configuration in this phase, or later phases, will be stored into flash. When the board powers on/reboots, you do not need to configure the Wi-Fi driver from scratch. You only need to call esp_wifi_get_xxx APIs to fetch the configuration stored in flash previously. You can also configure the Wi-Fi driver if the previous configuration is not what you want.

3. Wi-Fi Start Phase

- s3.1: Call esp_wifi_start to start the Wi-Fi driver.

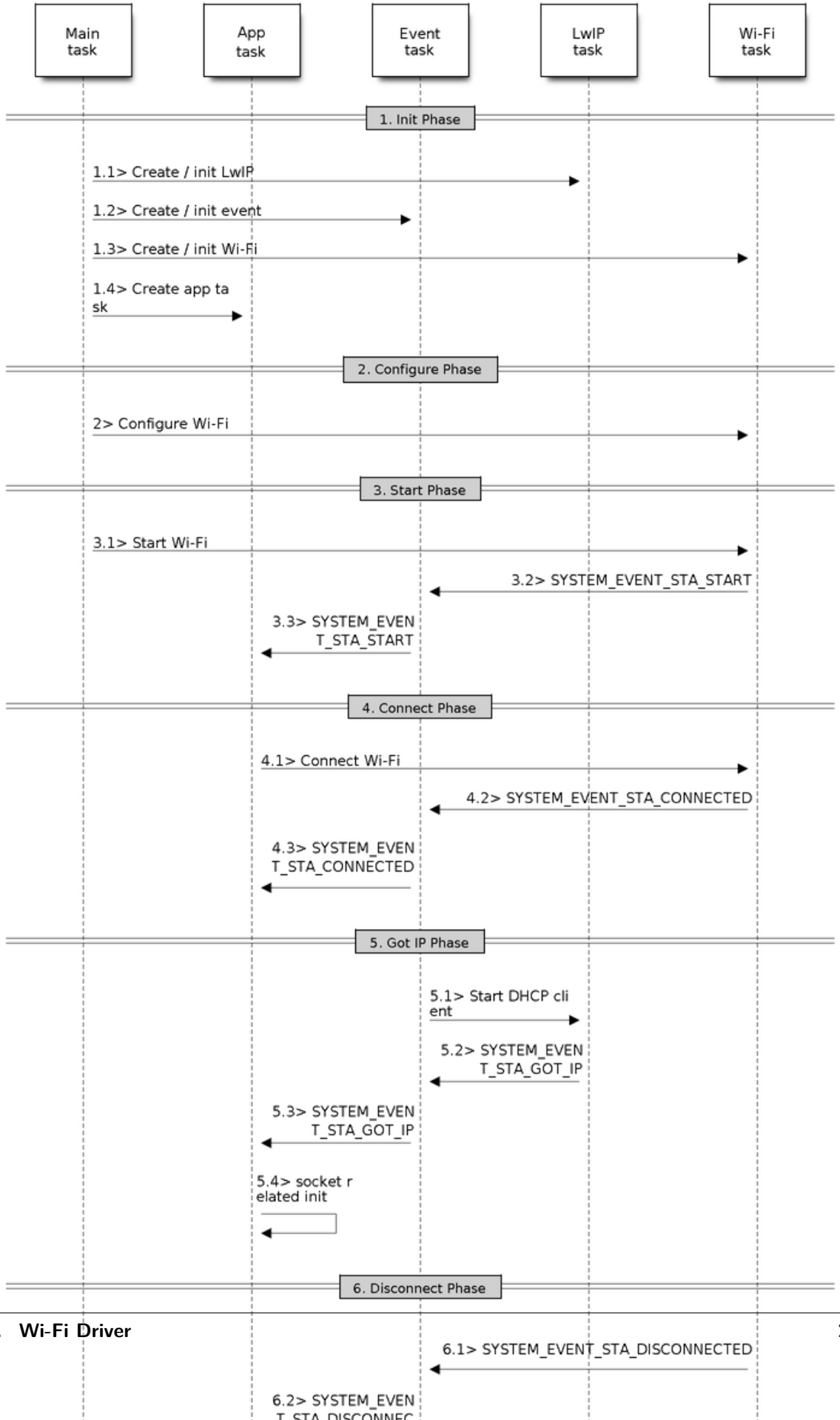
Main task
App task
Event task
LwIP task
Wi-Fi task
1. Init Phase
1.1> Create / init LwIP
1.2> Create / init event
1.3> Create / init Wi-Fi
1.4> Create app task
2. Configure Phase
2> Configure Wi-Fi
3. Start Phase
3.1> Start Wi-Fi
3.2> SYSTEM_EVENT_STA_START
3.3> SYSTEM_EVENT_STA_START
4. Connect Phase
4.1> Connect Wi-Fi
4.2> SYSTEM_EVENT_STA_CONNECTED
4.3> SYSTEM_EVENT_STA_CONNECTED
5. Got IP Phase
5.1> Start DHCP client
5.2> SYSTEM_EVENT_STA_GOT_IP
5.3> SYSTEM_EVENT_STA_GOT_IP
5.4> socket related init
6. Disconnect Phase
6.1> SYSTEM_EVENT_STA_DISCONNECTED
6.2> SYSTEM_EVENT_STA_DISCONNECTED

- s3.2: The Wi-Fi driver posts <*SYSTEM_EVENT_STA_START*> to the event task; then, the event task will do some common things and will call the application event callback function.
- s3.3: The application event callback function relays the <*SYSTEM_EVENT_STA_START*> to the application task. We recommend that you call esp_wifi_connect(). However, you can also call esp_wifi_connect() in other phrases after the <*SYSTEM_EVENT_STA_START*> arises.

4. Wi-Fi Connect Phase

- s4.1: Once esp_wifi_connect() is called, the Wi-Fi driver will start the internal scan/connection process.
- s4.2: If the internal scan/connection process is successful, the <*SYSTEM_EVENT_STA_CONNECTED*> will be generated. In the event task, it starts the DHCP client, which will finally trigger the DHCP process.
- s4.3: In the above-mentioned scenario, the application event callback will relay the event to the application task. Generally, the application needs to do nothing, and you can do whatever you want, e.g., print a log, etc.

In step 4.2, the Wi-Fi connection may fail because, for example, the password is wrong, the AP is not found, etc. In a case like this, <*SYSTEM_EVENT_STA_DISCONNECTED*> will arise and the reason for such a failure will be provided. For handling events that disrupt Wi-Fi connection, please refer to phase 6.

5. Wi-Fi 'Got IP' Phase

- s5.1: Once the DHCP client is initialized in step 4.2, the *got IP* phase will begin.
- s5.2: If the IP address is successfully received from the DHCP server, then <*SYSTEM_EVENT_STA_GOT_IP*> will arise and the event task will perform common handling.
- s5.3: In the application event callback, <*SYSTEM_EVENT_STA_GOT_IP*> is relayed to the application task. For LwIP-based applications, this event is very special and means that everything is ready for the application to begin its tasks, e.g. creating the TCP/UDP socket, etc. A very common mistake is to initialize the socket before <*SYSTEM_EVENT_STA_GOT_IP*> is received. **DO NOT start the socket-related work before the IP is received.**

6. Wi-Fi Disconnect Phase

- s6.1: When the Wi-Fi connection is disrupted, e.g. because the AP is powered off, the RSSI is poor, etc., <*SYSTEM_EVENT_STA_DISCONNECTED*> will arise. This event may also arise in phase 3. Here, the event task will notify the LwIP task to clear/remove all UDP/TCP connections. Then, all application sockets will be in a wrong status. In other words, no socket can work properly when this event happens.

- s6.2: In the scenario described above, the application event callback function relays <*SYSTEM_EVENT_STA_DISCONNECTED*> to the application task. We recommend that esp_wifi_connect() be called to reconnect the Wi-Fi, close all sockets and re-create them if necessary. Refer to <*SYSTEM_EVENT_STA_DISCONNECTED*>.

7. Wi-Fi IP Change Phase

- s7.1: If the IP address is changed, the <*SYSTEM_EVENT_STA_GOT_IP*> will arise with "ip_change" set to true.
- s7.2: **This event is important to the application. When it occurs, the timing is good for closing all created sockets and recreating them.**

8. Wi-Fi Deinit Phase

- s8.1: Call esp_wifi_disconnect() to disconnect the Wi-Fi connectivity.
- s8.2: Call esp_wifi_stop() to stop the Wi-Fi driver.
- s8.3: Call esp_wifi_deinit() to unload the Wi-Fi driver.

5.23.8 ESP32 Wi-Fi AP General Scenario

Below is a "big scenario" which describes some small scenarios in AP mode:

5.23.9 ESP32 Wi-Fi Scan

Currently, the esp_wifi_scan_start() API is supported only in Station or Station+AP mode.

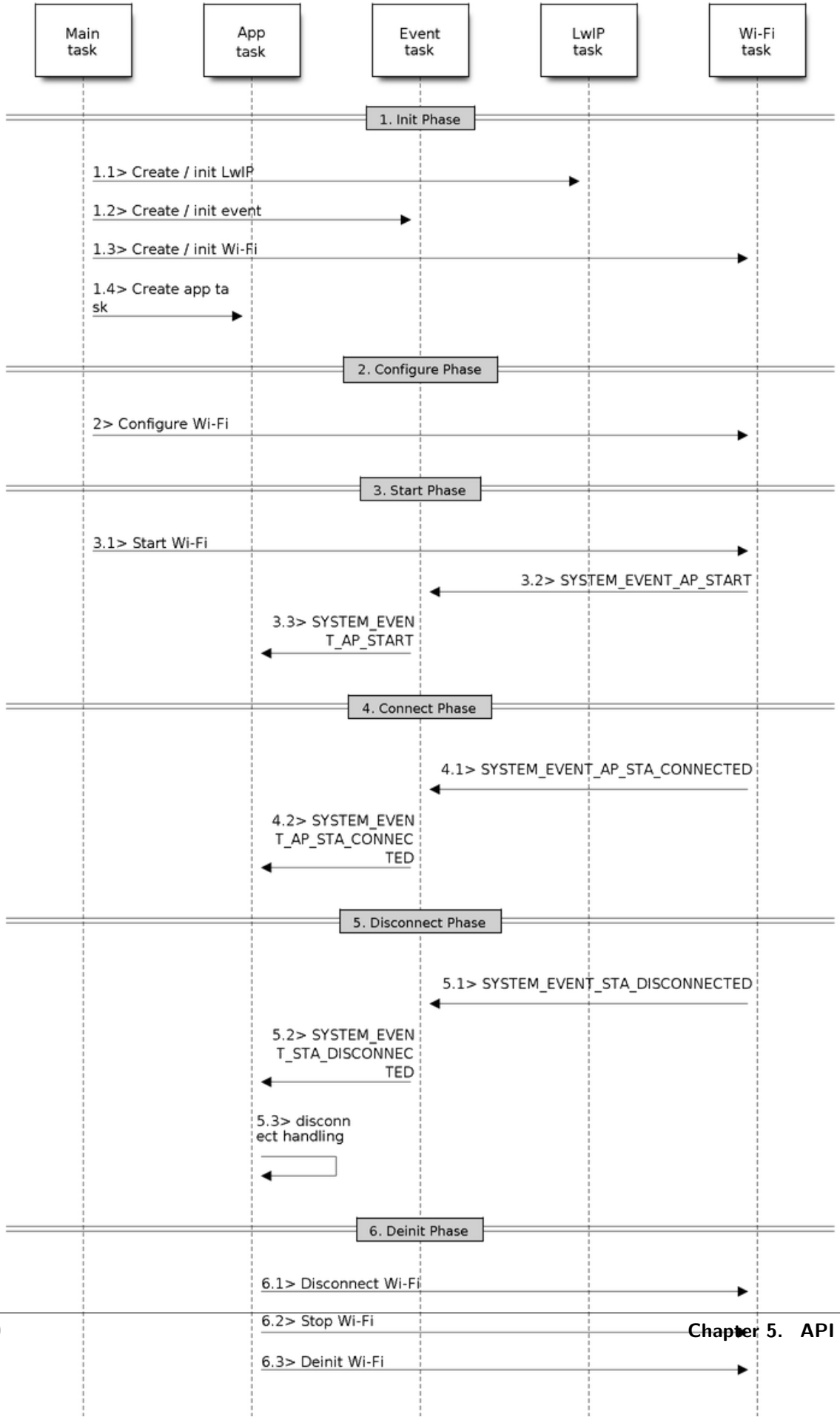
Main task
App task
Event task
LwIP task
Wi-Fi task
1. Init Phase
1.1> Create / init LwIP
1.2> Create / init event
1.3> Create / init Wi-Fi
1.4> Create app task
2. Configure Phase
2> Configure Wi-Fi
3. Start Phase
3.1> Start Wi-Fi
3.2> SYSTEM_EVENT_AP_START
3.3> SYSTEM_EVENT_AP_START
4. Connect Phase
4.1> SYSTEM_EVENT_AP_STA_CONNECTED
4.2> SYSTEM_EVENT_AP_STA_CONNECTED
5. Disconnect Phase
5.1> SYSTEM_EVENT_STA_DISCONNECTED
5.2> SYSTEM_EVENT_STA_DISCONNECTED
5.3> disconnect handling
6. Deinit Phase
6.1> Disconnect Wi-Fi
6.2> Stop Wi-Fi
6.3> Deinit Wi-Fi

Scan Type

Mode	Description
Active Scan	Scan by sending a probe request. The default scan is an active scan.
Passive Scan	No probe request is sent out. Just switch to the specific channel and wait for a beacon. Application can enable it via the scan_type field of wifi_scan_config_t.
Foreground Scan	This scan is applicable when there is no Wi-Fi connection in Station mode. Foreground or background scanning is controlled by the Wi-Fi driver and cannot be configured by the application.
Background Scan	This scan is applicable when there is a Wi-Fi connection in Station mode or in Station+AP mode. Whether it is a foreground scan or background scan depends on the Wi-Fi driver and cannot be configured by the application.
All-Channel Scan	It scans all of the channels. If the channel field of wifi_scan_config_t is set to 0, it is an all-channel scan.
Specific Channel Scan	It scans specific channels only. If the channel field of wifi_scan_config_t set to 1, it is a specific-channel scan.

The scan modes in above table can be combined arbitrarily, so we totally have 8 different scans:

- All-Channel Background Active Scan
- All-Channel Background Passive Scan
- All-Channel Foreground Active Scan
- All-Channel Foreground Passive Scan
- Specific-Channel Background Active Scan
- Specific-Channel Background Passive Scan
- Specific-Channel Foreground Active Scan
- Specific-Channel Foreground Passive Scan

Scan Configuration

The scan type and other per-scan attributes are configured by esp_wifi_scan_start. The table below provides a detailed description of wifi_scan_config_t.

Field	Description
ssid	If the SSID is not NULL, it is only the AP with the same SSID that can be scanned.
bssid	If the BSSID is not NULL, it is only the AP with the same BSSID that can be scanned.
channel	If "channel" is 0, there will be an all-channel scan; otherwise, there will be a specific-channel scan.
show_hidden	If "show_hidden" is 0, the scan ignores the AP with a hidden SSID; otherwise, the scan considers the hidden AP a normal one.
scan_type	If "scan_type" is WIFI_SCAN_TYPE_ACTIVE, the scan is "active" ; otherwise, it is a "passive" one.
scan_time	This field is used to control how long the scan dwells on each channel. For passive scans, scan_time.passive designates the dwell time for each channel. For active scans, dwell times for each channel are listed in the table below. Here, min is short for scan time.active.min and max is short for scan_time.active.max. • min=0, max=0: scan dwells on each channel for 120 ms. • min>0, max=0: scan dwells on each channel for 120 ms. • min=0, max>0: scan dwells on each channel for `max` ms. • min>0, max>0: the minimum time the scan dwells on each channel is `min` ms. If no AP is found during this time frame, the scan switches to the next channel. Otherwise, the scan dwells on the channel for `max` ms. If you want to improve the performance of the the scan, you can try to modify these two parameters.

There also some global scan attributes which is configured by API esp_wifi_set_config, refer to *Station*

Basic Configuration

Scan All APs In All Channels(foreground)

Scenario:

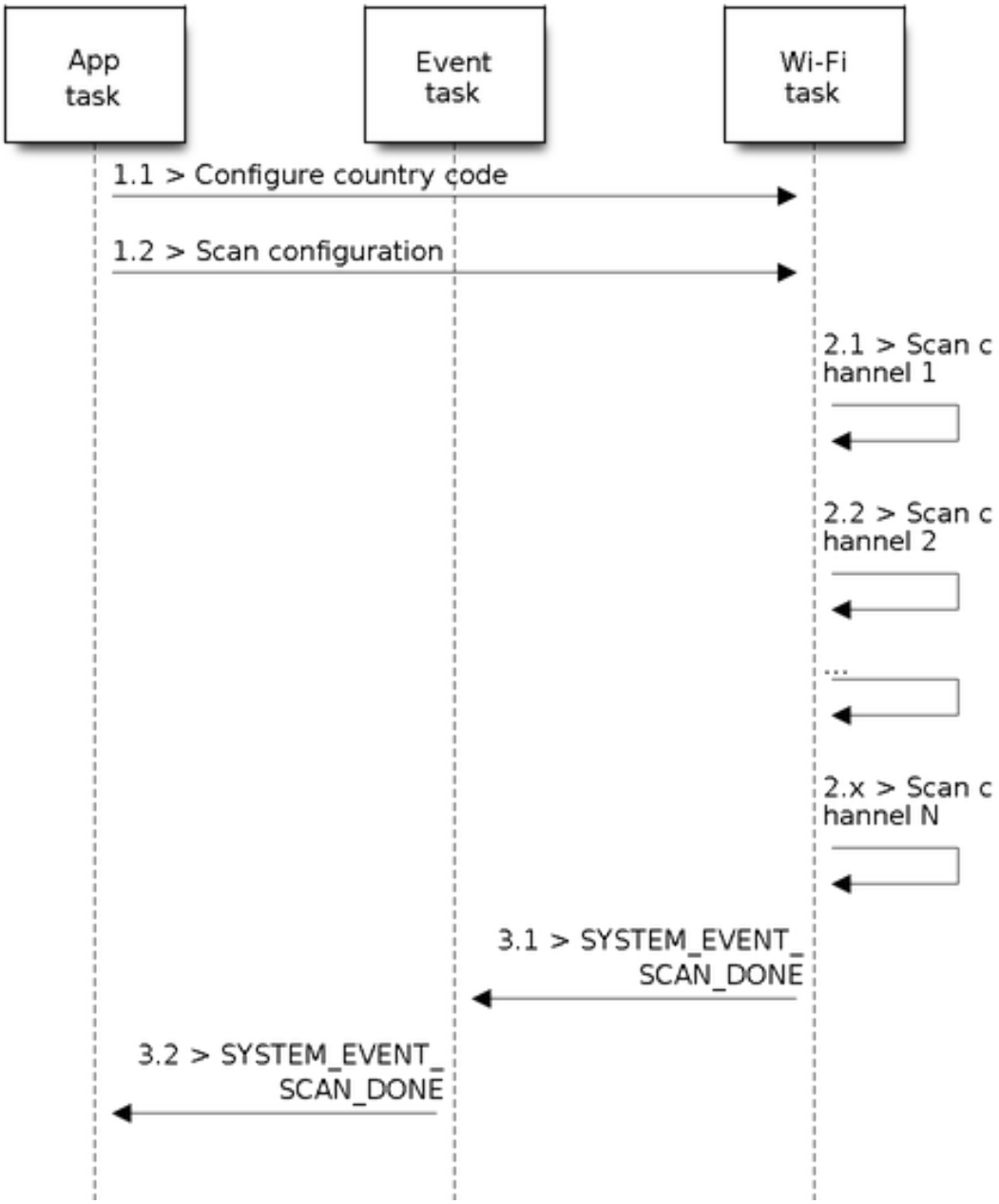

图 27: Foreground Scan of all Wi-Fi Channels

The scenario above describes an all-channel, foreground scan. The foreground scan can only occur in Station mode where the station does not connect to any AP. Whether it is a foreground or background scan is totally determined by the Wi-Fi driver, and cannot be configured by the application.

Detailed scenario description:

Scan Configuration Phase

- s1.1: Call esp_wifi_set_country() to set the country info if the default country info is not what you want, refer to <*Wi-Fi Country Code*>.
- s1.2: Call esp_wifi_scan_start() to configure the scan. To do so, you can refer to <*Scan Configuration*>. Since this is an all-channel scan, just set the SSID/BSSID/channel to 0.

Wi-Fi Driver' s Internal Scan Phase

- s2.1: The Wi-Fi driver switches to channel 1, in case the scan type is WIFI_SCAN_TYPE_ACTIVE, and broadcasts a probe request. Otherwise, the Wi-Fi will wait for a beacon from the APs. The Wi-Fi driver will stay in channel 1 for some time. The dwell time is configured in min/max time, with default value being 120 ms.
- s2.2: The Wi-Fi driver switches to channel 2 and performs the same operation as in step 2.1.
- s2.3: The Wi-Fi driver scans the last channel N, where N is determined by the country code which is configured in step 1.1.

Scan-Done Event Handling Phase

- s3.1: When all channels are scanned, <*SYSTEM_EVENT_SCAN_DONE*> will arise.
- s3.2: The application' s event callback function notifies the application task that <*SYSTEM_EVENT_SCAN_DONE*> is received. esp_wifi_scan_get_ap_num() is called to get the number of APs that have been found in this scan. Then, it allocates enough entries and calls esp_wifi_scan_get_ap_records() to get the AP records. Please note that the AP records in the Wi-Fi driver will be freed, once esp_wifi_scan_get_ap_records() is called. Do not call esp_wifi_scan_get_ap_records() twice for a single scan-done event. If esp_wifi_scan_get_ap_records() is not called when the scan-done event occurs, the AP records allocated by the Wi-Fi driver will not be freed. So, make sure you call esp_wifi_scan_get_ap_records(), yet only once.

Scan All APs on All Channels(background)

Scenario:

The scenario above is an all-channel background scan. Compared to *Scan All APs In All Channels(foreground)* , the difference in the all-channel background scan is that the Wi-Fi driver will scan the back-to-home channel for 30 ms before it switches to the next channel to give the Wi-Fi connection a chance to transmit/receive data.

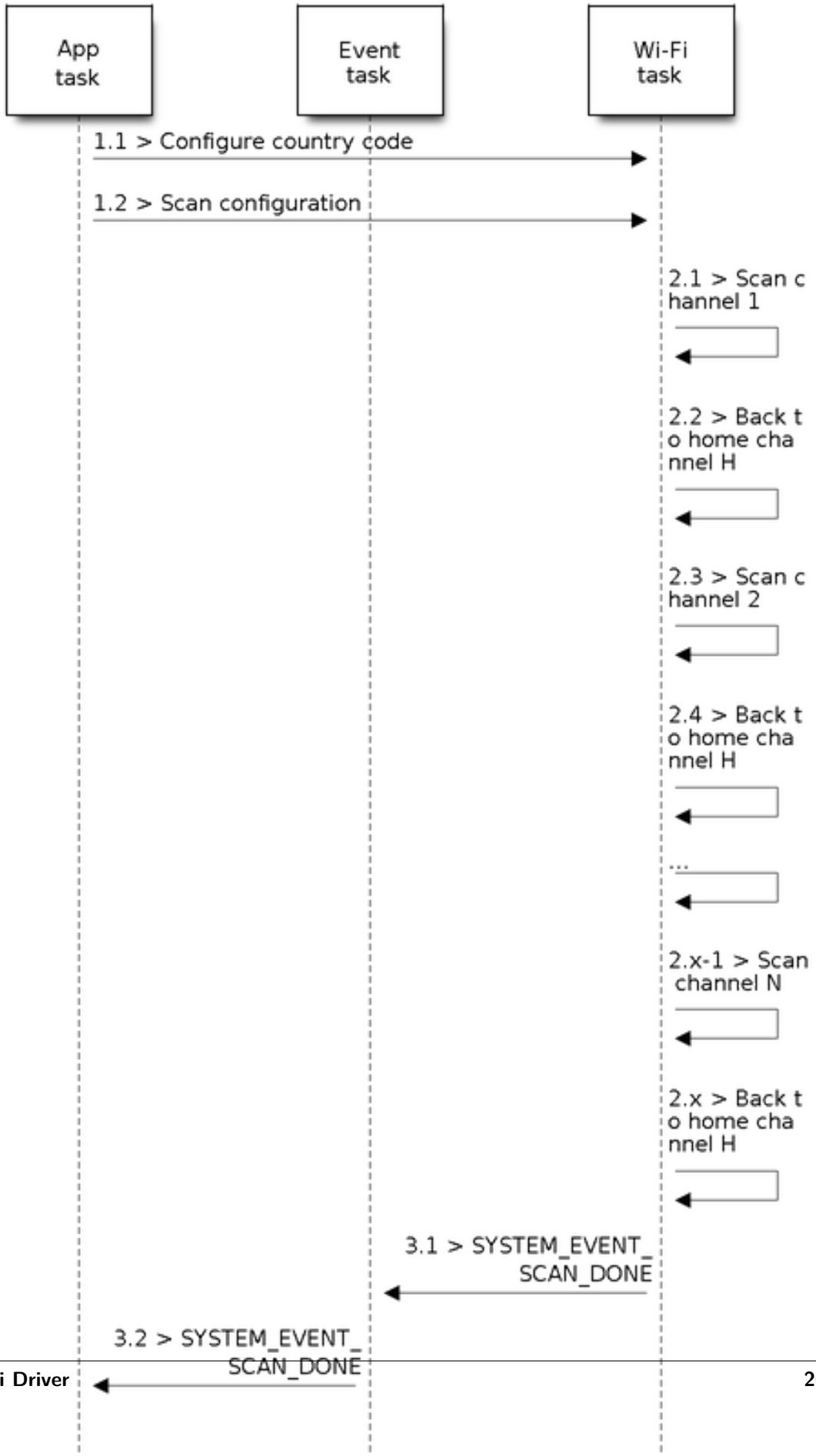
App task
Event task
Wi-Fi task
1.1 > Configure country code
1.2 > Scan configuration
2.1 > Scan channel 1
2.2 > Back to home channel H
2.3 > Scan channel 2
2.4 > Back to home channel H
...
2.x-1 > Scan channel N
2.x > Back to home channel H
3.1 > SYSTEM_EVENT_SCAN_DONE
3.2 > SYSTEM_EVENT_SCAN_DONE

Scan for a Specific AP in All Channels

Scenario:

This scan is similar to *Scan All APs In All Channels(foreground)*. The differences are:

- s1.1: In step 1.2, the target AP will be configured to SSID/BSSID.
- s2.1~s2.N: Each time the Wi-Fi driver scans an AP, it will check whether it is a target AP or not. If the scan is WIFI_FAST_SCAN scan and the target AP is found, then the scan-done event will arise and scanning will end; otherwise, the scan will continue. Please note that the first scanned channel may not be channel 1, because the Wi-Fi driver optimizes the scanning sequence.

If there are multiple APs which match the target AP info, for example, if we happen to scan two APs whose SSID is "ap". If the scan is WIFI_FAST_SCAN, then only the first scanned "ap" will be found, if the scan is WIFI_ALL_CHANNEL_SCAN, both "ap" will be found and the station will connect the "ap" according to the configured strategy, refer to *Station Basic Configuration*.

You can scan a specific AP, or all of them, in any given channel. These two scenarios are very similar.

Scan in Wi-Fi Connect

When esp_wifi_connect() is called, then the Wi-Fi driver will try to scan the configured AP first. The scan in "Wi-Fi Connect" is the same as *Scan for a Specific AP In All Channels*, except that no scan-done event will be generated when the scan is completed. If the target AP is found, then the Wi-Fi driver will start the Wi-Fi connection; otherwise, <*SYSTEM_EVENT_STA_DISCONNECTED*> will be generated. Refer to *Scan for a Specific AP in All Channels*

Scan In Blocked Mode

If the block parameter of esp_wifi_scan_start() is true, then the scan is a blocked one, and the application task will be blocked until the scan is done. The blocked scan is similar to an unblocked one, except that no scan-done event will arise when the blocked scan is completed.

Parallel Scan

Two application tasks may call esp_wifi_scan_start() at the same time, or the same application task calls esp_wifi_scan_start() before it gets a scan-done event. Both scenarios can happen. **However, the Wi-Fi driver does not support multiple concurrent scans adequately. As a result, concurrent scans should be avoided.** Support for concurrent scan will be enhanced in future releases, as the ESP32' s Wi-Fi functionality improves continuously.

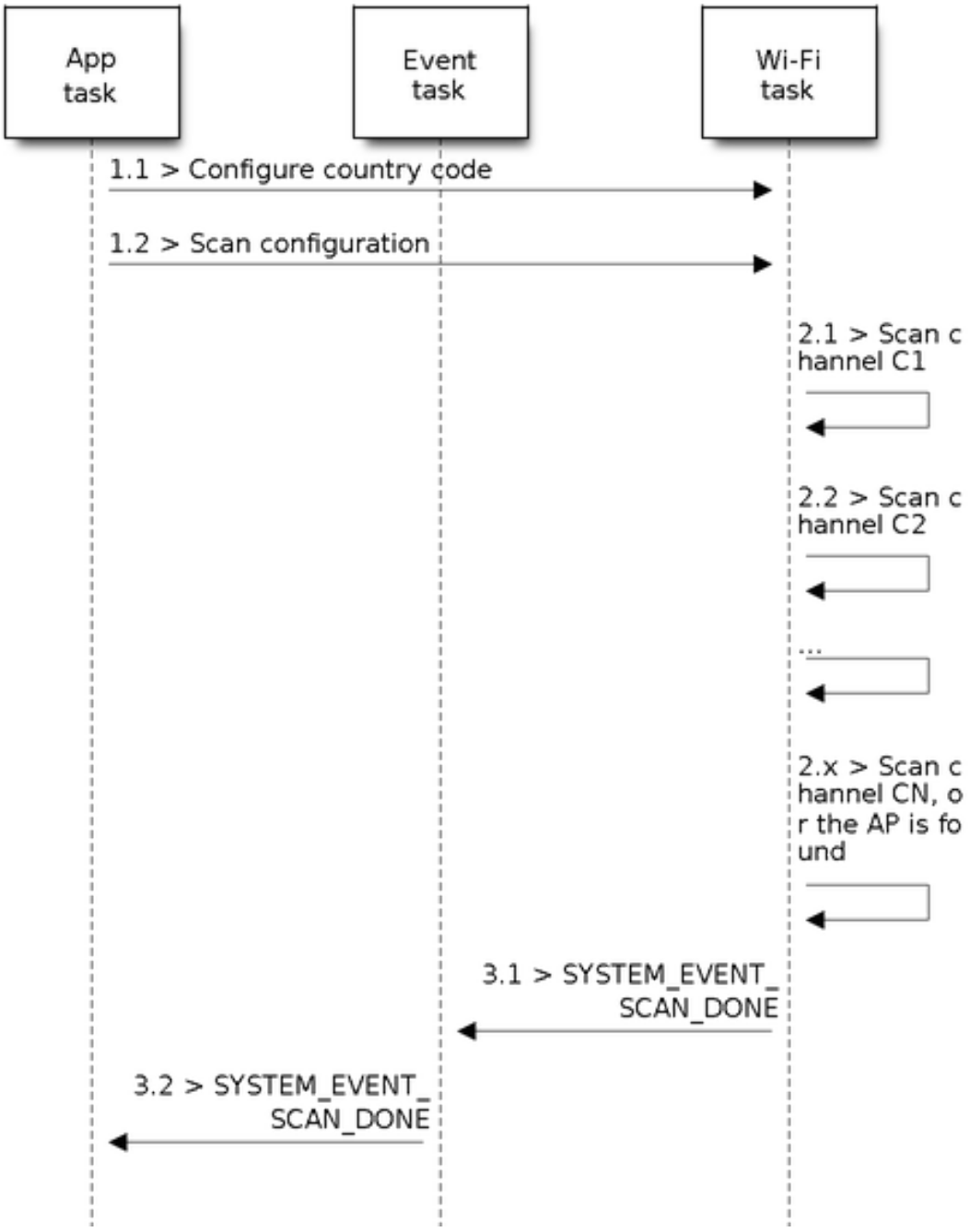

图 29: Scan of specific Wi-Fi Channels

Scan When Wi-Fi Is Connecting

The esp_wifi_scan_start() fails immediately if the Wi-Fi is in connecting process because the connecting has higher priority than the scan. If scan fails because of connecting, the recommended strategy is to delay sometime and retry scan again, the scan will succeed once the connecting is completed.

However, the retry/delay strategy may not work all the time. Considering following scenario: - The station is connecting a non-existed AP or if the station connects the existed AP with a wrong password, it always raises the event <*SYSTEM_EVENT_STA_DISCONNECTED*>. - The application call esp_wifi_connect() to do reconnection on receiving the disconnect event. - Another application task, e.g. the console task, call esp_wifi_scan_start() to do scan, the scan always fails immediately because the station is keeping connecting. - When scan fails, the application simply delay sometime and retry the scan.

In above scenario the scan will never succeed because the connecting is in process. So if the application supports similar scenario, it needs to implement a better reconnect strategy. E.g. - The application can choose to define a maximum continuous reconnect counter, stop reconnect once the reconnect reaches the max counter. - The application can choose to do reconnect immediately in the first N continous reconnect, then give a delay sometime and reconnect again.

The application can define its own reconnect strategy to avoid the scan starve to death. Refer to <*Wi-Fi Reconnect*>.

5.23.10 ESP32 Wi-Fi Station Connecting Scenario

This scenario only depicts the case when there is only one target AP are found in scan phase, for the scenario that more than one AP with the same SSID are found, refer to <*ESP32 Wi-Fi Station Connecting When Multiple APs Are Found*>.

Generally, the application does not need to care about the connecting process. Below is a brief introduction to the process for those who are really interested.

Scenario:

Scan Phase

- s1.1, The Wi-Fi driver begins scanning in "Wi-Fi Connect". Refer to <*Scan in Wi-Fi Connect*> for more details.
- s1.2, If the scan fails to find the target AP, <*SYSTEM_EVENT_STA_DISCONNECTED*> will arise and the reason-code will be WIFI_REASON_NO_AP_FOUND. Refer to <*Wi-Fi Reason Code*>.

Auth Phase

- s2.1, The authentication request packet is sent and the auth timer is enabled.

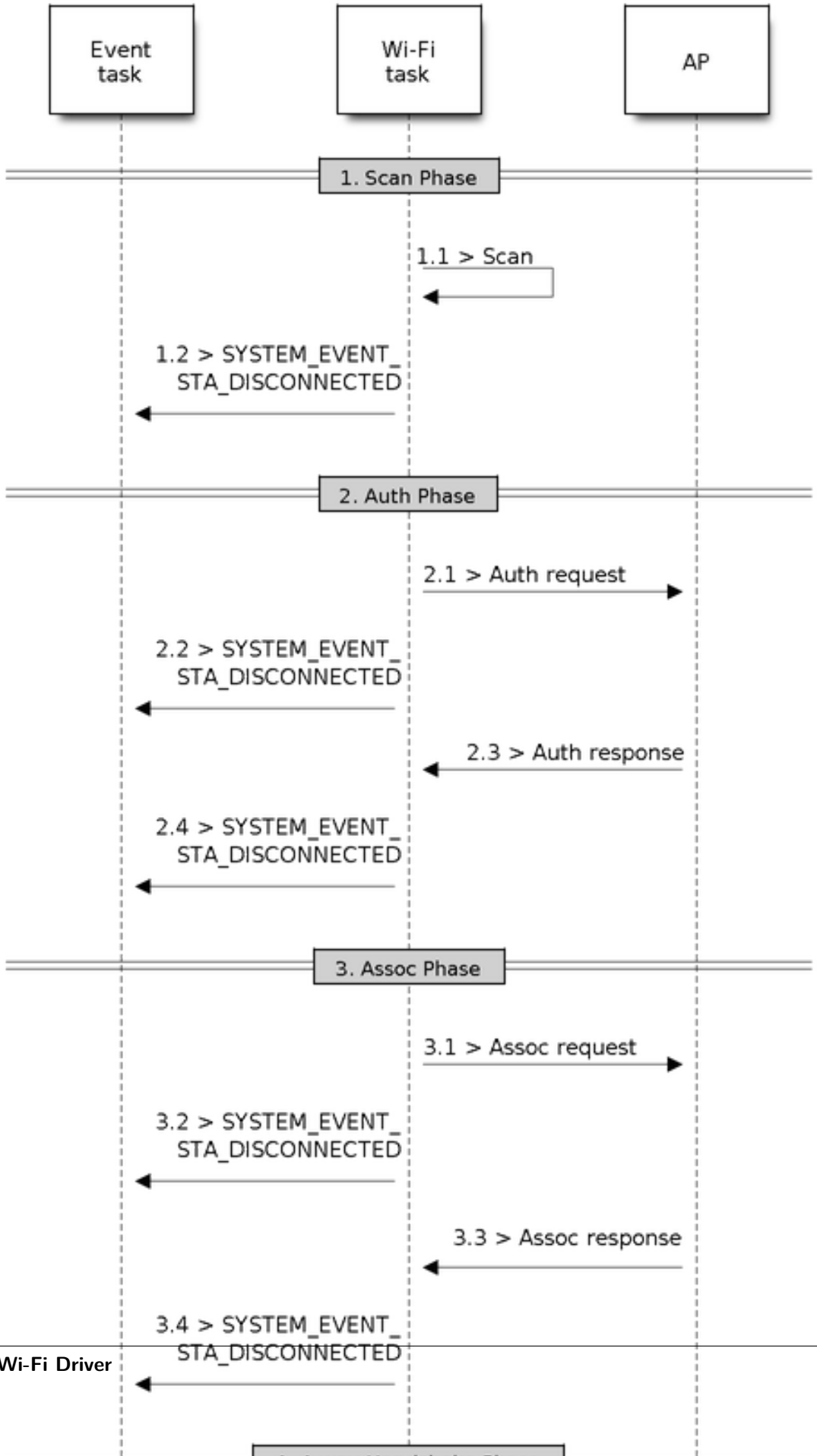
Event task
Wi-Fi task
AP
1. Scan Phase
1.1 > Scan
1.2 > SYSTEM_EVENT_STA_DISCONNECTED
2. Auth Phase
2.1 > Auth request
2.2 > SYSTEM_EVENT_STA_DISCONNECTED
2.3 > Auth response
2.4 > SYSTEM_EVENT_STA_DISCONNECTED
3. Assoc Phase
3.1 > Assoc request
3.2 > SYSTEM_EVENT_STA_DISCONNECTED
3.3 > Assoc response
3.4 > SYSTEM_EVENT_STA_DISCONNECTED

- s2.2, If the authentication response packet is not received before the authentication timer times out, <*SYSTEM_EVENT_STA_DISCONNECTED*> will arise and the reason-code will be WIFI_REASON_AUTH_EXPIRE. Refer to <*Wi-Fi Reason Code*>.
- s2.3, The auth-response packet is received and the auth-timer is stopped.
- s2.4, The AP rejects authentication in the response and <*SYSTEM_EVENT_STA_DISCONNECTED*> arises, while the reason-code is WIFI_REASON_AUTH_FAIL or the reasons specified by the AP. Refer to <*Wi-Fi Reason Code*>.

Association Phase

- s3.1, The association request is sent and the association timer is enabled.
- s3.2, If the association response is not received before the association timer times out, <*SYSTEM_EVENT_STA_DISCONNECTED*> will arise and the reason-code will be WIFI_REASON_ASSOC_EXPIRE. Refer to <*Wi-Fi Reason Code*>.
- s3.3, The association response is received and the association timer is stopped.
- s3.4, The AP rejects the association in the response and <*SYSTEM_EVENT_STA_DISCONNECTED*> arises, while the reason-code is the one specified in the association response. Refer to <*Wi-Fi Reason Code*>.

Four-way Handshake Phase

- s4.1, The four-way handshake is sent out and the association timer is enabled.
- s4.2, If the association response is not received before the association timer times out, <*SYSTEM_EVENT_STA_DISCONNECTED*> will arise and the reason-code will be WIFI_REASON_ASSOC_EXPIRE. Refer to <*Wi-Fi Reason Code*>.
- s4.3, The association response is received and the association timer is stopped.
- s4.4, The AP rejects the association in the response and <*SYSTEM_EVENT_STA_DISCONNECTED*> arises and the reason-code will be the one specified in the association response. Refer to <*Wi-Fi Reason Code*>.

Wi-Fi Reason Code

The table below shows the reason-code defined in ESP32. The first column is the macro name defined in esp_wifi_types.h. The common prefix *WIFI_REASON* is removed, which means that *UNSPECIFIED* actually stands for *WIFI_REASON_UNSPECIFIED* and so on. The second column is the value of the reason. The third column is the standard value to which this reason is mapped in section 8.4.1.7 of ieee802.11-2012. (For more information, refer to the standard mentioned above.) The last column is a description of the reason.

Reason code	Value	Mapped To	Description
UNSPECIFIED	1	1	Generally, it means an internal failure, e.g., the memory runs out, the internal TX fails, or the reason is received from the remote side, etc.
AUTH_EXPIRE	2	2	The previous authentication is no longer valid. For the ESP32 Station, this reason is reported when: • auth is timed out • the reason is received from the AP. For the ESP32 AP, this reason is reported when: • the AP has not received any packets from the station in the past five minutes. • the AP is stopped by calling esp_wifi_stop(). • the station is deauthed by calling esp_wifi_deauth_sta()
AUTH_LEAVE	3	3	De-authenticated, because the sending STA is leaving (or has left). For the ESP32 Station, this reason is reported when: • it is received from the AP.
ASSOC_EXPIRE	4	4	Disassociated due to inactivity. For the ESP32 Station, this reason is reported when: • it is received from the AP.

5.23.11 ESP32 Wi-Fi Station Connecting When Multiple APs Are Found

This scenario is similar as <*ESP32 Wi-Fi Station Connecting Scenario*>, the difference is the station will not raise the event <*SYSTEM_EVENT_STA_DISCONNECTED*> unless it fails to connect all of the found APs.

5.23.12 Wi-Fi Reconnect

The station may disconnect due to many reasons, e.g. the connected AP is restarted etc. It's the application's responsibility to do the reconnect. The recommended reconnect strategy is to call esp_wifi_connect() on receiving event <*SYSTEM_EVENT_STA_DISCONNECTED*>.

Sometimes the application needs more complex reconnect strategy: - If the disconnect event is raised because the esp_wifi_disconnect() is called, the application may not want to do reconnect. - If the esp_wifi_scan_start() may be called at anytime, a better reconnect strategy is necessary, refer to <*Scan When Wi-Fi Is Connecting*>.

Another thing we need to consider is the reconnect may not connect the same AP if there are more than one APs with the same SSID. The reconnect always select current best APs to connect.

5.23.13 Wi-Fi Beacon Timeout

The beacon timeout mechanism is used by ESP32 station to detect whether the AP is alive or not. If the station continuously loses 60 beacons of the connected AP, the beacon timeout happens.

After the beacon timeout happens, the station sends 5 probe requests to AP, it disconnects the AP and raises the event <*SYSTEM_EVENT_STA_DISCONNECTED*> if still no probe response or beacon is received from AP.

5.23.14 ESP32 Wi-Fi Configuration

All configurations will be stored into flash when the Wi-Fi NVS is enabled; otherwise, refer to <*Wi-Fi NVS Flash*>.

Wi-Fi Mode

Call esp_wifi_set_mode() to set the Wi-Fi mode.

Mode	Description
WIFI_MODE_NULL	NULL mode: in this mode, the internal data struct is not allocated to the station and the AP, while both the station and AP interfaces are not initialized for RX/TX Wi-Fi data. Generally, this mode is used for Sniffer, or when you only want to stop both the STA and the AP without calling esp_wifi_deinit() to unload the whole Wi-Fi driver.
WIFI_MODE_STA	Station mode: in this mode, esp_wifi_start() will init the internal station data, while the station's interface is ready for the RX and TX Wi-Fi data. After esp_wifi_connect() is called, the STA will connect to the target AP.
WIFI_MODE_AP	AP mode: in this mode, esp_wifi_start() will init the internal AP data, while the AP's interface is ready for RX/TX Wi-Fi data. Then, the Wi-Fi driver starts broad- casting beacons, and the AP is ready to get connected to other stations.
WIFI_MODE_APSTA	Station-AP coexistence mode: in this mode, esp_wifi_start() will simultaneously init both the station and the AP. This is done in station mode and AP mode. Please note that the channel of the external AP, which the ESP32 Station is connected to, has higher priority over the ESP32 AP channel.

Station Basic Configuration

API esp_wifi_set_config() can be used to configure the station. The table below describes the fields in detail.

Field	Description
ssid	This is the SSID of the target AP, to which the station wants to connect to.
password	Password of the target AP
scan_method	For WIFI_FAST_SCAN scan, the scan ends when the first matched AP is found, for WIFI_ALL_CHANNEL_SCAN, the scan finds all matched APs in all channels. The default scan is WIFI_FAST_SCAN.
bssid_set	If bssid_set is 0, the station connects to the AP whose SSID is the same as the field "ssid", while the field "bssid" is ignored. In all other cases, the station connects to the AP whose SSID is the same as the "ssid" field, while its BSSID is the same the "bssid" field .
bssid	This is valid only when bssid_set is 1; see field "bssid_set".
channel	If the channel is 0, the station scans the channel 1~N to search for the target AP; otherwise, the station starts by scanning the channel whose value is the same as that of the "channel" field, and then scans others to find the target AP. If you do not know which channel the target AP is running on, set it to 0.
sort_method	This field is only for WIFI_ALL_CHANNEL_SCAN If the sort_method is WIFI_CONNECT_AP_BY_SIGNAL, all matched APs are sorted by signal, for AP with best signal will be connected firstly. E.g. if the station want to connect AP whose ssid is "apxx", the scan finds two AP whose ssid equals to "apxx", the first AP's signal is -90dBm, the second AP's signal is -30dBm, the station connects the second AP firstly, it doesn't connect the first one unless it fails to connect the second one. If the sort_method is WIFI_CONNECT_AP_BY_SECURITY, all matched APs are sorted by security. E.g. if the station wants to connect AP whose ssid is "apxx", the scan finds two AP whose ssid is "apxx", the security of the first found AP is open while the second one is WPA2, the stations connects to the second AP firstly, it doesn't connect the second one unless it fails to connect the first one.
threshold	The threshold is used to filter the found AP, if the RSSI or security mode is less than the configured threshold, the AP will be discard. If the RSSI set to 0, it means default threshold, the default RSSI threshold is -127dBm. If the authmode threshold is set to 0, it means default threshold, the default authmode threshold is open.

注意: WEP/WPA security modes are deprecated in IEEE802.11-2016 specifications and are recommended not to be used. These modes c an be rejected using authmode threshold by setting threshold as WPA2 by threshold.authmode as WIFI_AUTH_WPA2_PSK.

AP Basic Configuration

API esp_wifi_set_config() can be used to configure the AP. The table below describes the fields in detail.

Field	Description
ssid	SSID of AP; if the ssid[0] is 0xFF and ssid[1] is 0xFF, the AP defaults the SSID to ESP_aabbcc, where "aabbcc" is the last three bytes of the AP MAC.
password	Password of AP; if the auth mode is WIFI_AUTH_OPEN, this field will be ignored.
ssid_len	Length of SSID; if ssid_len is 0, check the SSID until there is a termination character. If ssid_len > 32, change it to 32; otherwise, set the SSID length according to ssid_len.
channel	Channel of AP; if the channel is out of range, the Wi-Fi driver defaults the channel to channel 1. So, please make sure the channel is within the required range. For more details, refer to <*Wi-Fi Country Code*>.
authmode	Auth mode of ESP32 AP; currently, ESP32 Wi-Fi does not support AUTH_WEP. If the authmode is an invalid value, AP defaults the value to WIFI_AUTH_OPEN.
ssid_hidden	If ssid_hidden is 1, AP does not broadcast the SSID; otherwise, it does broadcast the SSID.
max_connection	Currently, ESP32 Wi-Fi supports up to 10 Wi-Fi connections. If max_connection > 10, AP defaults the value to 10.
beacon_interval	Beacon interval; the value is 100 ~ 60000 ms, with default value being 100 ms. If the value is out of range, AP defaults it to 100 ms.

Wi-Fi Protocol Mode

Currently, the IDF supports the following protocol modes:

Protocol Mode	Description
802.11B	Call esp_wifi_set_protocol(ifx, WIFI_PROTOCOL_11B) to set the station/AP to 802.11B-only mode.
802.11BG	Call esp_wifi_set_protocol(ifx, WIFI_PROTOCOL_11B|WIFI_ PROTOCOL_11G) to set the station/AP to 802.11BG mode.
802.11BGN	Call esp_wifi_set_protocol(ifx, WIFI_PROTOCOL_11B| WIFI_PROTOCOL_11G|WIFI_PROTOCOL_11N) to set the station/ AP to BGN mode.
802.11BGNLR	Call esp_wifi_set_protocol(ifx, WIFI_PROTOCOL_11B| WIFI_PROTOCOL_11G|WIFI_PROTOCOL_11N|W to set the station/AP to BGN and the Espressif-specific mode.
802.11LR	Call esp_wifi_set_protocol(ifx, WIFI_PROTOCOL_LR) to set the station/AP only to the Espressif-specific mode. **This mode is an Espressif-patented mode which can achieve a one-kilometer line of sight range. Please, make sure both the station and the AP are connected to an ESP32 device**

Long Range (LR)

Long Range (LR) mode is an Espressif-patented Wi-Fi mode which can achieve a one-kilometer line of sight range. It has better reception sensitivity, stronger anti-interference ability and longer transmission distance than the traditional 802.11B mode.

LR Compitability

Since LR is Espressif unique Wi-Fi mode, only ESP32 devices can transmit and receive the LR data. In other words, the ESP32 device should NOT transmit the data in LR data rate if the connected device doesn't support LR. The application can achieve this by configuring suitable Wi-Fi mode. If the negotiated mode supports LR, the ESP32 may transmit data in LR rate, otherwise, ESP32 will transmit all data in traditional Wi-Fi data rate.

Following table depicts the Wi-Fi mode negotiation:

APSTA	BGN	BG	B	BGNLR	BGLR	BLR	LR
BGN	BGN	BG	B	BGN	BG	B	•
BG	BG	BG	B	BG	BG	B	•
B	B	B	B	B	B	B	•
BGNLR	•	•	•	BGNLR	BGLR	BLR	LR
BGLR	•	•	•	BGLR	BGLR	BLR	LR
BLR	•	•	•	BLR	BLR	BLR	LR
LR	•	•	•	LR	LR	LR	LR

In above table, the row is the Wi-Fi mode of AP and the column is the Wi-Fi mode of station. The "-" indicates Wi-Fi mode of the AP and station are not compatible.

According to the table, we can conclude that:

- For LR enabled in ESP32 AP, it's incompatible with traditional 802.11 mode because the beacon is sent in LR mode.
- For LR enabled in ESP32 station and the mode is NOT LR only mode, it's compatible with traditional 802.11 mode.

- If both station and AP are ESP32 devices and both of them enable LR mode, the negotiated mode supports LR.

If the negotiated Wi-Fi mode supports both traditional 802.11 mode and LR mode, it' s the WiFi driver' s responsibility to automatically select the best data rate in different Wi-Fi mode and the application don' t need to care about it.

LR Impacts to Traditional Wi-Fi device

The data transmission in LR rate has no impacts on the traditional Wi-Fi device because:

- The CCA and backoff process in LR mode are consistent with 802.11 specification.
- The traditional Wi-Fi device can detect the LR signal via CCA and do backoff.

In other words, the impact transmission in LR mode is similar as the impact in 802.11B mode.

LR Transmission Distance

The reception sensitivity of LR has about 4 dB gain than the traditional 802.11 B mode, theoretically the transmission distance is about 2 to 2.5 times the distance of 11B.

LR Throughput

The LR rate has very limited throughput because the raw PHY data rate LR is 1/2 Mbits and 1/4 Mbits.

When to Use LR

The general conditions for using LR are:

- Both the AP and station are ESP32 devices.
- Long distance WiFi connection and data transmission is required.
- Data throughput requirements are very small, such as remote device control, etc.

Wi-Fi Country Code

Call esp_wifi_set_country() to set the country info. The table below describes the fields in detail, please consult local 2.4GHz RF operating regulations before configuring these fields.

Field	Description
cc[3]	Country code string, this attributes identify the country or noncountry entity in which the station/AP is operating. If it' s a country, the first two octets of this string is the two character country info as described in document ISO/IEC3166-1. The third octect is one of the following: • an ASCII space character, if the regulations under which the station/AP is operating encompass all environments for the current frequency band in the country • an ASCII 'O' character if the regulations under which the station/AP is operating are for an outdoor environment only, or • an ASCII 'I' character if the regulations under which the station/AP is operating are for an indoor environment only. • an ASCII 'X' character if the station/AP is operating under a noncountry entity. The first two octets of the noncountry entity is two ASSCII 'XX' characters. • the binary representation of the Operating Class table number currently in use. Refer 802.11-2012 Annex E.
schan	Start channel, it' s the minimum channel number of the regulations under which the station/AP can operate.
snum	Total channel number of the regulations, e.g. if the schan=1, nchan=13, it means the station/AP can send data from channel 1 to 13.
policy	Country policy, this field control which country info will be used if the configured country info is conflict with the connected AP' s. More description about policy is provided in following section.

The default country info is {.cc=" CN" , .schan=1, .nchan=13, policy=WIFI_COUNTRY_POLICY_AUTO}, if the WiFi Mode is station/AP coexist mode, they share the same configured country info. Sometimes, the country info of AP, to which the station is connected, is different from the country info of configured. For example, the configured station has country info {.cc=" JP" , .schan=1, .nchan=14, policy=WIFI_COUNTRY_POLICY_AUTO}, but the connected AP has

country info {.cc=" CN" , .schan=1, .nchan=13}, then country info of connected AP' s is used. Following table depicts which country info is used in different WiFi Mode and different country policy, also describe the impact to active scan.

WiFi Mode	Policy	Description
Station	WIFI_COUNTRY_POLICY_AUTO	If the connected AP has country IE in its beacon, the country info equals to the country info in beacon, otherwise, use default country info. For scan: • before the station connects to the AP, scans channel "schan" to "min(11, schan+nchan-1)" with active scan and channel min(12, schan+nchan)" to 14 with passive scan. E.g. if the used country info is {.cc=" CN" , .schan=1, .nchan=6} then 1 to 6 is active scan and 7 to 14 is passive scan If the used country info is {.cc=" CN" , .schan=1, .nchan=12} then 1 to 11 is active scan and 12 to 14 is passive scan • after the station connects to the AP, scans channel "schan" to "schan+nchan-1" with active scan and channel "schan+nchan" to 14 with passive scan Always keep in mind that if if a AP with with hidden SSID is set to a passive scan channel, the passive scan will not find it. In other words, if the application hopes to find the AP with hidden SSID in every channel, the policy of country info should be configured to WIFI_COUNTRY_POLICY_MANUAL.
Station	WIFI_COUNTRY_POLICY_MANUAL	Always use the configured country info For scan, scans channel "schan" to "schan+nchan-1" with active scan
AP	WIFI_COUNTRY_POLICY_AUTO	Always use the configured country info

Home Channel

In AP mode, the home channel is defined as that of the AP channel. In Station mode, the home channel is defined as the channel of the AP to which the station is connected. In Station+AP mode, the home channel of AP and station must be the same. If the home channels of Station and AP are different, the station' s home channel is always in priority. Take the following as an example: at the beginning, the AP is on channel 6, then the station connects to an AP whose channel is 9. Since the station' s home channel has a higher priority, the AP needs to switch its channel from 6 to 9 to make sure that both station and AP have the same home channel.

Wi-Fi Vendor IE Configuration

By default, all Wi-Fi management frames are processed by the Wi-Fi driver, and the application does not need to care about them. Some applications, however, may have to handle the beacon, probe request, probe response and other management frames. For example, if you insert some vendor-specific IE into the management frames, it is only the management frames which contain this vendor-specific IE that will be processed. In ESP32, esp_wifi_set_vendor_ie() and esp_wifi_set_vendor_ie_cb() are responsible for this kind of tasks.

5.23.15 ESP32 Wi-Fi Power-saving Mode

Station Sleep

Currently, ESP32 Wi-Fi supports the Modem-sleep mode which refers to the legacy power-saving mode in the IEEE 802.11 protocol. Modem-sleep mode works in Station-only mode and the station must connect to the AP first. If the Modem-sleep mode is enabled, station will switch between active and sleep state periodically. In sleep state, RF, PHY and BB are turned off in order to reduce power consumption. Station can keep connection with AP in modem-sleep mode.

Modem-sleep mode includes minimum and maximum power save modes. In minimum power save mode, station wakes up every DTIM to receive beacon. Broadcast data will not be lost because it is transmitted after DTIM. However, it can not save much more power if DTIM is short for DTIM is determined by AP.

In maximum power save mode, station wakes up every listen interval to receive beacon. This listen interval can be set longer than the AP DTIM period. Broadcast data may be lost because station may be in sleep state at DTIM time. If listen interval is longer, more power is saved but broadcast data is more easy to lose. Listen interval can be configured by calling API *esp_wifi_set_config()* before connecting to AP.

Call `esp_wifi_set_ps(WIFI_PS_MIN_MODEM)` to enable Modem-sleep minimum power save mode or `esp_wifi_set_ps(WIFI_PS_MAX_MODEM)` to enable Modem-sleep maximum power save mode after calling *esp_wifi_init()*. When station connects to AP, Modem-sleep will start. When station disconnects from AP, Modem-sleep will stop.

Call `esp_wifi_set_ps(WIFI_PS_NONE)` to disable modem sleep entirely. This has much higher power consumption, but provides minimum latency for receiving Wi-Fi data in real time. When modem sleep is enabled, received Wi-Fi data can be delayed for as long as the DTIM period (minimum power save mode) or the listen interval (maximum power save mode). Disabling modem sleep entirely is not possible for Wi-Fi and Bluetooth coexist mode.

The default Modem-sleep mode is WIFI_PS_MIN_MODEM.

AP Sleep

Currently ESP32 AP doesn't support all of the power save feature defined in Wi-Fi specification. To be specific, the AP only caches unicast data for the stations connect to this AP, but doesn't cache the multicast data for the stations. If stations connected to the ESP32 AP are power save enabled, they may experience multicast packet loss.

In future, all power save features will be supported on ESP32 AP.

5.23.16 ESP32 Wi-Fi Connect Crypto

Now ESP32 have two group crypto functions can be used when do wifi connect, one is the original functions, the other is optimized by ESP hardware: 1. Original functions which is the source code used in the folder components/wpa_supplicant/src/crypto function; 2. The optimized functions is in the folder components/wpa_supplicant/src/fast_crypto, these function used the hardware crypto to make it faster than origin one, the type of function's name add *fast_* to distinguish with the original one. For example, the API aes_wrap() is used to encrypt frame information when do 4 way handshake, the fast_aes_wrap() has the same result but can be faster.

Two groups of crypto function can be used when register in the wpa_crypto_funcs_t, wpa2_crypto_funcs_t and wps_crypto_funcs_t structure, also we have given the recommend functions to register in the fast_crypto_ops.c, you can register the function as the way you need, however what should make action is that the crypto_hash_xxx function and crypto_cipher_xxx function need to register with the same function to operation. For example, if you register crypto_hash_init() function to initialize the esp_crypto_hash structure, you need use the crypto_hash_update() and crypto_hash_finish() function to finish the operation, rather than fast_crypto_hash_update() or fast_crypto_hash_finish().

5.23.17 ESP32 Wi-Fi Throughput

The table below shows the best throughput results we got in Espressif's lab and in a shield box.

Type/Throughput	Air In Lab	Shield-box	Test Tool	IDF Version (commit ID)
Raw 802.11 Packet RX	N/A	**130 MBit/sec**	Internal tool	NA
Raw 802.11 Packet TX	N/A	**130 MBit/sec**	Internal tool	NA
UDP RX	30 MBit/sec	90 MBit/sec	iperf example	05838641
UDP TX	30 MBit/sec	60 MBit/sec	iperf example	05838641
TCP RX	20 MBit/sec	50 MBit/sec	iperf example	05838641
TCP TX	20 MBit/sec	50 MBit/sec	iperf example	05838641

When the throughput is tested by iperf example, the sdkconfig is examples/wifi/iperf/sdkconfig.defaults.99

5.23.18 Wi-Fi 80211 Packet Send

The esp_wifi_80211_tx API can be used to:

- Send the beacon, probe request, probe response, action frame.
- Send the non-QoS data frame.

It cannot be used for sending encrypted or QoS frames.

Preconditions of Using esp_wifi_80211_tx

- The Wi-Fi mode is Station, or AP, or Station+AP.
- Either esp_wifi_set_promiscuous(true), or esp_wifi_start(), or both of these APIs return ESP_OK. This is because we need to make sure that Wi-Fi hardware is initialized before esp_wifi_80211_tx() is called. In ESP32, both esp_wifi_set_promiscuous(true) and esp_wifi_start() can trigger the initialization of Wi-Fi hardware.
- The parameters of esp_wifi_80211_tx are hereby correctly provided.

Data rate

- If there is no WiFi connection, the data rate is 1Mbps.
- If there is WiFi connection and the packet is from station to AP or from AP to station, the data rate is same as the WiFi connection. Otherwise the data rate is 1Mbps.

Side-Effects to Avoid in Different Scenarios

Theoretically, if we do not consider the side-effects the API imposes on the Wi-Fi driver or other stations/APs, we can send a raw 802.11 packet over the air, with any destination MAC, any source MAC, any BSSID, or any other type of packet. However,robust/useful applications should avoid such side-effects. The

table below provides some tips/recommendations on how to avoid the side-effects of esp_wifi_80211_tx in different scenarios.

Scenario	Description
No WiFi connection	In this scenario, no Wi-Fi connection is set up, so there are no side-effects on the Wi-Fi driver. If en_sys_seq==true, the Wi-Fi driver is responsible for the sequence control. If en_sys_seq==false, the application needs to ensure that the buffer has the correct sequence. Theoretically, the MAC address can be any address. However, this may impact other stations/APs with the same MAC/BSSID. Side-effect example#1 The application calls esp_wifi_80211_tx to send a beacon with BSSID == mac_x in AP mode, but the mac_x is not the MAC of the AP interface. Moreover, there is another AP, say "other-AP" , whose bssid is mac_x. If this happens, an "unexpected behavior" may occur, because the stations which connect to the "other-AP" cannot figure out whether the beacon is from the "other-AP" or the esp_wifi_80211_tx. To avoid the above-mentioned side-effects, we recommend that: • If esp_wifi_80211_tx is called in Station mode, the first MAC should be a multicast MAC or the exact target-device' s MAC, while the second MAC should be that of the station interface. • If esp_wifi_80211_tx is called in AP mode, the first MAC should be a multicast MAC or the exact target-device' s MAC, while the second MAC should be that of the AP interface. The recommendations above are only for avoiding side-effects and can be ignored when there are good reasons for doing this.
Have WiFi connection	When the Wi-Fi connection is already set up, and the sequence is controlled by the application, the latter may impact the sequence control of the Wi-Fi connection, as a whole. So, the en_sys_seq need to be true, otherwise ESP_ERR_WIFI_ARG is returned. The MAC-address recommendations in the "No WiFi connection" scenario also apply to this scenario. If the WiFi mode is station mode and the MAC address1 is the MAC of AP to which the station is connected, the MAC address2 is the MAC of station

5.23.19 Wi-Fi Sniffer Mode

The Wi-Fi sniffer mode can be enabled by esp_wifi_set_promiscuous(). If the sniffer mode is enabled, the following packets **can** be dumped to the application:

- 802.11 Management frame
- 802.11 Data frame, including MPDU, AMPDU, AMSDU, etc.
- 802.11 MIMO frame, for MIMO frame, the sniffer only dumps the length of the frame.
- 802.11 Control frame

The following packets will **NOT** be dumped to the application:

- 802.11 error frame, such as the frame with a CRC error, etc.

For frames that the sniffer **can** dump, the application can additionally decide which specific type of packets can be filtered to the application by using esp_wifi_set_promiscuous_filter() and esp_wifi_set_promiscuous_ctrl_filter(). By default, it will filter all 802.11 data and management frames to the application.

The Wi-Fi sniffer mode can be enabled in the Wi-Fi mode of WIFI_MODE_NULL, or WIFI_MODE_STA, or WIFI_MODE_AP, or WIFI_MODE_APSTA. In other words, the sniffer mode is active when the station is connected to the AP, or when the AP has a Wi-Fi connection. Please note that the sniffer has a **great impact** on the throughput of the station or AP Wi-Fi connection. Generally, we should **NOT** enable the sniffer, when the station/AP Wi-Fi connection experiences heavy traffic unless we have special reasons.

Another noteworthy issue about the sniffer is the callback wifi_promiscuous_cb_t. The callback will be called directly in the Wi-Fi driver task, so if the application has a lot of work to do for each filtered packet, the recommendation is to post an event to the application task in the callback and defer the real work to the application task.

5.23.20 Wi-Fi Multiple Antennas

The Wi-Fi multiple antennas selecting can be depicted as following picture:

```
                ----------
               |Enabled   |
            ___|Antenna 0 |\\                                          ---------
               |__________| \\        GPIO[0] <----> antenna_select[0] ---|         | ---
↪ antenna 0
RX/TX ___                    \\____\  GPIO[1] <----> antenna_select[1] ---| Antenna | ---
↪ antenna 1
         \      __________   //    /  GPIO[2] <----> antenna_select[2] ---| Switch  | ...
↪  ...
```

(下页继续)

(续上页)

```
         \ ___|Enabled   | //        GPIO[3] <----> antenna_select[3] ---|_________| ---
↪ antenna 15
          \   |Antenna 1 |//
              |__________|
```

ESP32 supports up to sixteen antennas through external antenna switch. The antenna switch can be controlled by up to four address pins - antenna_select[0:3]. Different input value of antenna_select[0:3] means selecting different antenna. E.g. the value '0b1011' means the antenna 11 is selected. The default value of antenna_select[3:0] is '0b0000', it means the antenna 0 is selected by default.

Up to four GPIOs are connected to the four active high antenna_select pins. ESP32 can select the antenna by control the GPIO[0:3]. The API *esp_wifi_set_ant_gpio()* is used to configure which GPIOs are connected to antenna_selects. If GPIO[x] is connected to antenna_select[x], then gpio_config->gpio_cfg[x].gpio_select should be set to 1 and gpio_config->gpio_cfg[x].gpio_num should be provided.

Although up to sixteen anteenas are supported, only one or two antennas can be simultaneously enabled for RX/TX. The API *esp_wifi_set_ant()* is used to configure which antennas are enabled.

The enabled antennas selecting algorithm is also configured by *esp_wifi_set_ant()*. The RX/TX antenna mode can be WIFI_ANT_MODE_ANT0, WIFI_ANT_MODE_ANT1 or WIFI_ANT_MODE_AUTO. If the antenna mode is WIFI_ANT_MODE_ANT0, the enabled antenna 0 is selected for RX/TX data. If the antenna mode is WIFI_ANT_MODE_ANT1, the enabled antenna 1 is selected for RX/TX data. Otherwise, WiFi automatically selects the antenna that has better signal from the enabled antennas.

If the RX antenna mode is WIFI_ANT_MODE_AUTO, the default antenna mode also needs to be set. Because the RX antenna switching only happens when some conditions are met, e.g. the RX antenna starts to switch if the RSSI is lower than -65dBm and if another antenna has better signal etc, RX uses the default antenna if the conditions are not met. If the default antenna mode is WIFI_ANT_MODE_ANT1, the enabled antenna 1 is used as the default RX antenna, otherwise the enabled antenna 0 is used as the default RX antenna.

Some limitations need to be considered:

- The TX antenna can be set to WIFI_ANT_MODE_AUTO only if the RX antenna mode is WIFI_ANT_MODE_AUTO because TX antenna selecting algorithm is based on RX antenna in WIFI_ANT_MODE_AUTO type.
- Currently BT doesn't support the multiple antennas feature, please don't use multiple antennas related APIs.

Following is the recommended scenarios to use the multiple antennas:

- In Wi-Fi mode WIFI_MODE_STA, both RX/TX antenna modes are configured to WIFI_ANT_MODE_AUTO. The WiFi driver selects the better RX/TX antenna automatically.
- The RX antenna mode is configured to WIFI_ANT_MODE_AUTO. The TX antenna mode is configured to WIFI_ANT_MODE_ANT0 or WIFI_ANT_MODE_ANT1. The applications

can choose to always select a specified antenna for TX, or implement their own TX antenna selecting algorithm, e.g. selecting the TX antenna mode based on the channel switch information etc.

- Both RX/TX antenna modes are configured to WIFI_ANT_MODE_ANT0 or WIFI_ANT_MODE_ANT1.

Wi-Fi Multiple Antennas Configuration

Generally, following steps can be taken to configure the multiple antennas:

- Configure which GPIOs are connected to the antenna_selects, for example, if four antennas are supported and GPIO20/GPIO21 are connected to antenna_select[0]/antenna_select[1], the configurations look like:

```
wifi_ant_gpio_config_t config = {
    { .gpio_select = 1, .gpio_num = 20 },
    { .gpio_select = 1, .gpio_num = 21 }
};
```

- Configure which antennas are enabled and how RX/TX use the enabled antennas, for example, if antenna1 and antenna3 are enabled, the RX needs to select the better antenna automatically and uses antenna1 as its default antenna, the TX always selects the antenna3. The configuration looks like:

```
wifi_ant_config_t config = {
    .rx_ant_mode = WIFI_ANT_MODE_AUTO,
    .rx_ant_default = WIFI_ANT_ANT0,
    .tx_ant_mode = WIFI_ANT_MODE_ANT1,
    .enabled_ant0 = 1,
    .enabled_ant1 = 3
};
```

5.23.21 Wi-Fi Channel State Information

Channel state information (CSI) refers to the channel information of a Wi-Fi connection. In ESP32, this information consists of channel frequency responses of sub-carriers and is estimated when packets are received from the transmitter. Each channel frequency response of sub-carrier is recorded by two bytes of signed characters. The first one is imaginary part and the second one is real part. There are up to three fields of channel frequency responses according to the type of received packet. They are legacy long training field (LLTF), high throughput LTF (HT-LTF) and space time block code HT-LTF (STBC-HT-LTF). For different types of packets which are received on channels with different state, the sub-carrier index and total bytes of signed characters of CSI is shown in the following table.

channel	secondary channel	any			below					above				
packet information	signal mode	non HT	HT		non HT	HT				non HT	HT			
	channel bandwidth	20MHz	20MHz		20MHz	20MHz		40MHz		20MHz	20MHz		40MHz	
	STBC	non STBC	non STBC	STBC	non STBC	non STBC	STBC	non STBC	STBC	non STBC	non STBC	STBC	non STBC	STBC
sub-carrier index	LLTF	0~31,-32~-1	0~31,-32~-1	0~31,-32~-1	0~63	0~63	0~63	0~63	0~63	-64~-1	-64~-1	-64~-1	-64~-1	-64~-1
	HT-LTF	•	0~31,-32~-1	0~31,-32~-1	•	0~63	0~62	0~63,-64~-1	0~60,-60~-1	•	-64~-1	-62~-1	0~63,-64~-1	0~60,-60~-1
	STBC-HT-LTF	•	•	0~31,-32~-1	•	•	0~62	•	0~60,-60~-1	•	•	-62~-1	•	0~60,-60~-1
total bytes		128	256	384	128	256	380	384	612	128	256	376	384	612

All of the information in the table can be found in the structure wifi_csi_info_t.

- Secondary channel refers to secondary_channel field of rx_ctrl field.
- Signal mode of packet refers to sig_mode field of rx_ctrl field.
- Channel bandwidth refers to cwb field of rx_ctrl field.
- STBC refers to stbc field of rx_ctrl field.
- Total bytes refers to len field.
- The CSI data corresponding to each Long Training Field(LTF) type is stored in a buffer starting from the buf field. Each item is stored as two bytes: imaginary part followed by real part. The order of each item is the same as the sub-carrier in the table. The order of LTF is: LLTF, HT-LTF, STBC-HT-LTF. However all 3 LTFs may not be present, depending on the channel and packet information (see above).
- If first_word_invalid field of wifi_csi_info_t is true, it means that the first four bytes of CSI data is invalid due to a hardware limitation in ESP32.
- More information like RSSI, noise floor of RF, receiving time and antenna is in the rx_ctrl field.

注解:

- For STBC packet, CSI is provided for every space-time stream without CSD (cyclic shift delay). As each cyclic shift on the additional chains shall be -200ns, only the CSD angle of first space-time stream is recorded in sub-carrier 0 of HT-LTF and STBC-HT-LTF for there is no channel frequency response in sub-carrier 0. CSD[10:0] is 11 bits, ranging from -pi to pi.
- If LLTF, HT-LTF or STBC-HT-LTF is not enabled by calling API *esp_wifi_set_csi_config()*, the total bytes of CSI data will be fewer than that in the table. For example, if LLTF and HT-LTF is not enabled and STBC-HT-LTF is enabled, when a packet is received with the condition above/HT/40MHz/STBC, the total bytes of CSI data is 244 ((61 + 60) * 2 + 2 = 244, the result is aligned to four bytes and the last two bytes is invalid).

5.23.22 Wi-Fi Channel State Information Configure

To use Wi-Fi CSI, the following steps need to be done.

- Select Wi-Fi CSI in menuconfig. It is "Menuconfig –> Components config –> Wi-Fi –> WiFi CSI(Channel State Information)" .
- Set CSI receiving callback function by calling API *esp_wifi_set_csi_rx_cb()*.
- Configure CSI by calling API *esp_wifi_set_csi_config()*.
- Enable CSI by calling API *esp_wifi_set_csi()*.

The CSI receiving callback function runs from Wi-Fi task. So, do not do lengthy operations in the callback function. Instead, post necessary data to a queue and handle it from a lower priority task. Because station does not receive any packet when it is disconnected and only receives packets from AP when it is connected, it is suggested to enable sniffer mode to receive more CSI data by calling *esp_wifi_set_promiscuous()*.

5.23.23 Wi-Fi HT20/40

ESP32 supports Wi-Fi bandwidth HT20 or HT40, it doesn't support HT20/40 coexist. *esp_wifi_set_bandwidth* can be used to change the default bandwidth of station or AP. The default bandwidth for ESP32 station and AP is HT40.

In station mode, the actual bandwidth is firstly negotiated during the Wi-Fi connection. It is HT40 only if both the station and the connected AP support HT40, otherwise it's HT20. If the bandwidth of connected AP is changes, the actual bandwidth is negotiated again without Wi-Fi disconnecting.

Similarly, in AP mode, the actual bandwidth is negotiated between AP and the stations that connect to the AP. It's HT40 only if the AP and all the stations support HT40, otherwise it's HT40.

In station/AP coexist mode, the station/AP can configure HT20/40 seperately. If both station and AP are negotiated to HT40, the HT40 channel should be the channel of station because the station always has higher priority than AP in ESP32. E.g. the configured bandwidth of AP is HT40, the configured primary channel is 6 and the configured secondary channel is 10. The station is connected to an router whose primary channel

is 6 and secondary channel is 2, then the actual channel of AP is changed to primary 6 and secondary 2 automatically.

Theoretically the HT40 can gain better throughput because the maximum raw physicial (PHY) data rate for HT40 is 150Mbps while it' s 72Mbps for HT20. However, if the device is used in some special environment, e.g. there are too many other Wi-Fi devices around the ESP32 device, the performance of HT40 may be degraded. So if the applications need to support same or similar scenarios, it' s recommended that the bandwidth is always configured to HT20.

5.23.24 Wi-Fi QoS

ESP32 supports all the mandatory features required in WFA Wi-Fi QoS Certification.

Four ACs(Access Category) are defined in Wi-Fi specification, each AC has a its own priority to access the Wi-Fi channel. Moreover a map rule is defined to map the QoS priority of other protocol, such as 802.11D or TCP/IP precedence to Wi-Fi AC.

Below is a table describes how the IP Precedences are mapped to Wi-Fi ACs in ESP32, it also indicates whether the AMPDU is supported for this AC. The table is sorted with priority descending order, namely, the AC_VO has highest priority.

IP Precedence	Wi-Fi AC	Support AMPDU?
6, 7	AC_VO (Voice)	No
4, 5	AC_VI (Video)	Yes
3, 0	AC_BE (Best Effort)	Yes
1, 2	AC_BK (Background)	Yes

The application can make use of the QoS feature by configuring the IP precedence via socket option IP_TOS. Here is an example to make the socket to use VI queue:

```
const int ip_precedence_vi = 4;
const int ip_precedence_offset = 5;
int priority = (ip_precedence_vi << ip_precedence_offset);
setsockopt(socket_id, IPPROTO_IP, IP_TOS, &priority, sizeof(priority));
```

Theoretically the higher priority AC has better performance than the low priority AC, however, it' s not a

- For some really important application traffic, can put it into AC_VO queue. Avoid sending big traffic via AC_VO queue. On one hand, the AC_VO queue doesn' t support AMPDU and it can' t get better performance than other queue if the traffic is big, on the other hand, it may impact the the management frames that also use AC_VO queue.
- Avoid using more than two different AMPDU supported precedences, e.g. socket A uses precedence 0, socket B uses precedence 1, socket C uses precedence 2, this is a bad design because it may

need much more memory. To be detailed, the Wi-Fi driver may generate a Block Ack session for each precedence and it needs more memory if the Block Ack session is setup.

5.23.25 Wi-Fi AMSDU

ESP32 supports receiving AMSDU but doesn't support transmitting AMSDU. The transmitting AMSDU is not necessary since ESP32 has transmitting AMPDU.

5.23.26 Wi-Fi Fragment

ESP32 supports Wi-Fi receiving fragment, but doesn't support Wi-Fi transmitting fragment. The Wi-Fi transmitting fragment will be supported in future release.

5.23.27 WPS Enrolle

ESP32 supports WPS enrollee feature in Wi-Fi mode WIFI_MODE_STA or WIFI_MODE_APSTA. Currently ESP32 supports WPS enrollee type PBC and PIN.

5.23.28 Wi-Fi Buffer Usage

This section is only about the dynamic buffer configuration.

Why Buffer Configuration Is Important

In order to get a robust, high-performance system, we need to consider the memory usage/configuration ve

- the available memory in ESP32 is limited.
- currently, the default type of buffer in LwIP and Wi-Fi drivers is "dynamic", **which means that both the LwIP and Wi-Fi share memory with the application**. Programmers should always keep this in mind; otherwise, they will face a memory issue, such as "running out of heap memory".
- it is very dangerous to run out of heap memory, as this will cause ESP32 an "undefined behavior". Thus, enough heap memory should be reserved for the application, so that it never runs out of it.
- the Wi-Fi throughput heavily depends on memory-related configurations, such as the TCP window size, Wi-Fi RX/TX dynamic buffer number, etc.
- the peak heap memory that the ESP32 LwIP/Wi-Fi may consume depends on a number of factors, such as the maximum TCP/UDP connections that the application may have, etc.

- the total memory that the application requires is also an important factor when considering memory configuration.

Due to these reasons, there is not a good-for-all application configuration. Rather, we have to consider memory configurations separately for every different application.

Dynamic vs. Static Buffer

The default type of buffer in LwIP and Wi-Fi drivers is "dynamic". Most of the time the dynamic buffer can significantly save memory. However, it makes the application programming a little more difficult, because in this case the application needs to consider memory usage in LwIP/Wi-Fi.

Peak LwIP Dynamic Buffer

The default type of LwIP buffer is "dynamic", and this section considers the dynamic buffer only. The peak heap memory that LwIP consumes is the **theoretically-maximum memory** that the LwIP driver consumes. Generally, the peak heap memory that the LwIP consumes depends on:

- the memory required to create a UDP connection: lwip_udp_conn
- the memory required to create a TCP connection: lwip_tcp_conn
- the number of UDP connections that the application has: lwip_udp_con_num
- the number of TCP connections that the application has: lwip_tcp_con_num
- the TCP TX window size: lwip_tcp_tx_win_size
- the TCP RX window size: lwip_tcp_rx_win_size

So, the peak heap memory that the LwIP consumes can be calculated with the following formula:

lwip_dynamic_peek_memory = (lwip_udp_con_num * lwip_udp_conn) + (lwip_tcp_con_num * (lwip_tcp_tx_win_size + lwip_tcp_rx_win_size + lwip_tcp_conn))

Some TCP-based applications need only one TCP connection. However, they may choose to close this TCP connection and create a new one when an error (such as a sending failure) occurs. This may result in multiple TCP connections existing in the system simultaneously, because it may take a long time for a TCP connection to close, according to the TCP state machine (refer to RFC793).

Peak Wi-Fi Dynamic Buffer

The Wi-Fi driver supports several types of buffer (refer to *Wi-Fi Buffer Configure*). However, this section is about the usage of the dynamic Wi-Fi buffer only. The peak heap memory that Wi-Fi consumes is the **theoretically-maximum memory** that the Wi-Fi driver consumes. Generally, the peak memory depends on:

- the number of dynamic rx buffers that are configured: wifi_rx_dynamic_buf_num

- the number of dynamic tx buffers that are configured: wifi_tx_dynamic_buf_num
- the maximum packet size that the Wi-Fi driver can receive: wifi_rx_pkt_size_max
- the maximum packet size that the Wi-Fi driver can send: wifi_tx_pkt_size_max

So, the peak memory that the Wi-Fi driver consumes can be calculated with the following formula:

wifi_dynamic_peek_memory = (wifi_rx_dynamic_buf_num * wifi_rx_pkt_size_max) + (wifi_tx_dynamic_buf_num * wifi_tx_pkt_size_max)

Generally, we do not need to care about the dynamic tx long buffers and dynamic tx long long buffers, because they are management frames which only have a small impact on the system.

5.23.29 Wi-Fi Menuconfig

Wi-Fi Buffer Configure

If you are going to modify the default number or type of buffer, it would be helpful to also have an overview of how the buffer is allocated/freed in the data path. The following diagram shows this process in the TX direction:

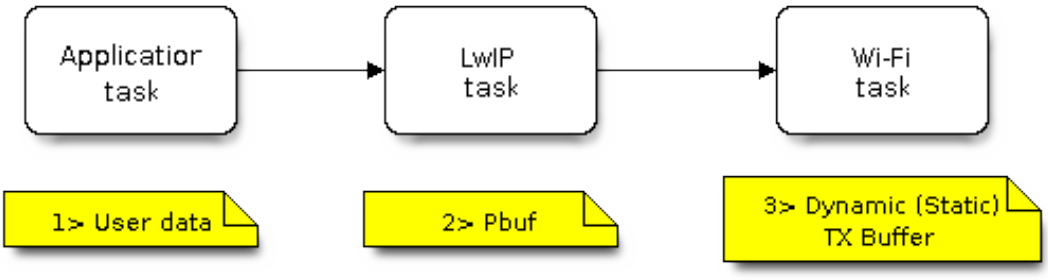

图 31: TX Buffer Allocation

Description:

- The application allocates the data which needs to be sent out.
- The application calls TCPIP-/Socket-related APIs to send the user data. These APIs will allocate a PBUF used in LwIP, and make a copy of the user data.
- When LwIP calls a Wi-Fi API to send the PBUF, the Wi-Fi API will allocate a "Dynamic Tx Buffer" or "Static Tx Buffer", make a copy of the LwIP PBUF, and finally send the data.

The following diagram shows how buffer is allocated/freed in the RX direction:

Description:

- The Wi-Fi hardware receives a packet over the air and puts the packet content to the "Static Rx Buffer", which is also called "RX DMA Buffer".

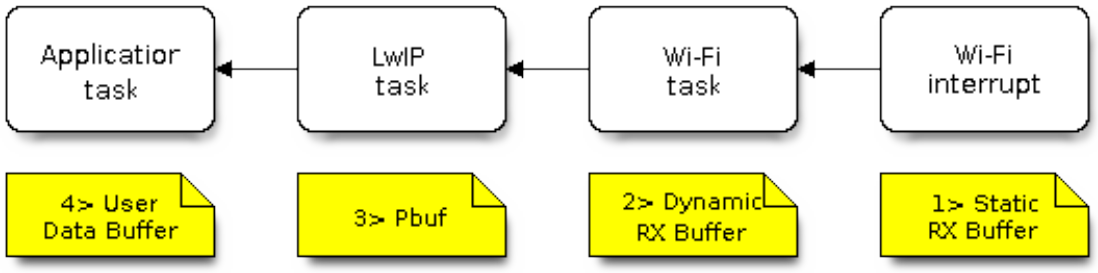

图 32: RX Buffer Allocation

- The Wi-Fi driver allocates a “Dynamic Rx Buffer”, makes a copy of the “Static Rx Buffer”, and returns the “Static Rx Buffer” to hardware.
- The Wi-Fi driver delivers the packet to the upper-layer (LwIP), and allocates a PBUF for holding the “Dynamic Rx Buffer”.
- The application receives data from LwIP.

The diagram shows the configuration of the Wi-Fi internal buffer.

Buffer Type	Alloc Type	Default	Configurable	Description
Static RX Buffer (Hardware RX Buffer)	Static	10 * 1600 Bytes	Yes	This is a kind of DMA memory. It is initialized in esp_wifi_init() and freed in esp_wifi_deinit(). The 'Static Rx Buffer' forms the hardware receiving list. Upon receiving a frame over the air, hardware writes the frame into the buffer and raises an interrupt to the CPU. Then, the Wi-Fi driver reads the content from the buffer and returns the buffer back to the list. If the application want to reduce the the memory statically allocated by Wi-Fi, they can reduce this value from 10 to 6 to save 6400 Bytes memory. It' s not recommended to reduce the configuration to a value less than 6 unless the AMPDU feature is disabled.
Dynamic RX Buffer	Dynamic	32	Yes	The buffer length is variable and it depends on the received frames' length. When the Wi-Fi driver receives

Wi-Fi NVS Flash

If the Wi-Fi NVS flash is enabled, all Wi-Fi configurations set via the Wi-Fi APIs will be stored into flash, and the Wi-Fi driver will start up with these configurations next time it powers on/reboots. However, the application can choose to disable the Wi-Fi NVS flash if it does not need to store the configurations into persistent memory, or has its own persistent storage, or simply due to debugging reasons, etc.

Wi-Fi AMPDU

ESP32 supports both receiving and transmitting AMPDU, the AMPDU can greatly improve the Wi-Fi throughput.

Generally, the AMPDU should be enabled. Disabling AMPDU is usually for debugging purposes.

5.23.30 Troubleshooting

Please refer to a separate document with *乐鑫 Wireshark 使用指南*.

乐鑫 Wireshark 使用指南

[English]

1. 概述

1.1 什么是 Wireshark ?

Wireshark（原称 Ethereal）是一个网络封包分析软件。网络封包分析软件的功能是撷取网络封包，并尽可能显示出最为详细的网络封包资料。Wireshark 使用 WinPCAP 作为接口，直接与网卡进行数据报文交换。

网络封包分析软件的功能可想像成“电工技师使用电表来量测电流、电压、电阻”的工作，只是将场景移植到网络上，并将电线替换成网线。

在过去，网络封包分析软件是非常昂贵，或是专门属于营利用的软件。Wireshark 的出现改变了这一切。

在 GNU GPL 通用许可证的保障范围下，使用者可以以免费的代价取得软件与其源代码，并拥有针对其源代码修改及客制化的权利。

Wireshark 是目前全世界最广泛的网络封包分析软件之一。

1.2 Wireshark 的主要应用

下面是 Wireshark 一些应用的举例：

- 网络管理员用来解决网络问题

- 网络安全工程师用来检测安全隐患
- 开发人员用来测试协议执行情况
- 用来学习网络协议

除了上面提到的，Wireshark 还可以用在其它许多场合。

1.3 Wireshark 的特性

- 支持 UNIX 和 Windows 平台
- 在接口实时捕捉包
- 能详细显示包的详细协议信息
- 可以打开/保存捕捉的包
- 可以导入导出其他捕捉程序支持的包数据格式
- 可以通过多种方式过滤包
- 多种方式查找包
- 通过过滤以多种色彩显示包
- 创建多种统计分析
- 等等

1.4 Wireshark 的“能”与“不能”?

- **捕捉多种网络接口**

  Wireshark 可以捕捉多种网络接口类型的包，哪怕是无线局域网接口。

- **支持多种其它程序捕捉的文件**

  Wireshark 可以打开多种网络分析软件捕捉的包。

- **支持多格式输出**

  Wireshark 可以将捕捉文件输出为多种其他捕捉软件支持的格式。

- **对多种协议解码提供支持**

  Wireshark 可以支持许多协议的解码。

- **Wireshark 不是入侵检测系统**

  如果您的网络中存在任何可疑活动，Wireshark 并不会主动发出警告。不过，当您希望对这些可疑活动一探究竟时，Wireshark 可以发挥作用。

- **Wireshark 不会处理网络事务，它仅仅是“测量”（监视）网络**

  Wireshark 不会发送网络包或做其它交互性的事情（名称解析除外，但您也可以禁止解析）。

2. 如何获取 Wireshark

官网链接：https://www.wireshark.org/download.html

Wireshark 支持多种操作系统，请在下载安装文件时，注意选择与您所用操作系统匹配的安装文件。

3. 使用步骤

本文档仅以 Linux 系统下的 Wireshark（版本号：2.2.6）为例。

1) 启动 Wireshark

Linux 下，可编写一个 Shell 脚本，运行该文件即可启动 Wireshark 配置抓包网卡和信道。Shell 脚本如下：

```
ifconfig $1 down
iwconfig $1 mode monitor
iwconfig $1 channel $2
ifconfig $1 up
Wireshark&
```

脚本中有两个参数：`$1` 和 `$2`，分别表示网卡和信道，例如，`./xxx.sh wlan0 6`（此处，`wlan0` 即为抓包使用的网卡，后面的数字 `6` 即为 AP 或 soft-AP 所在的 channel）。

2) 运行 Shell 脚本打开 Wireshark，会出现 Wireshark 抓包开始界面

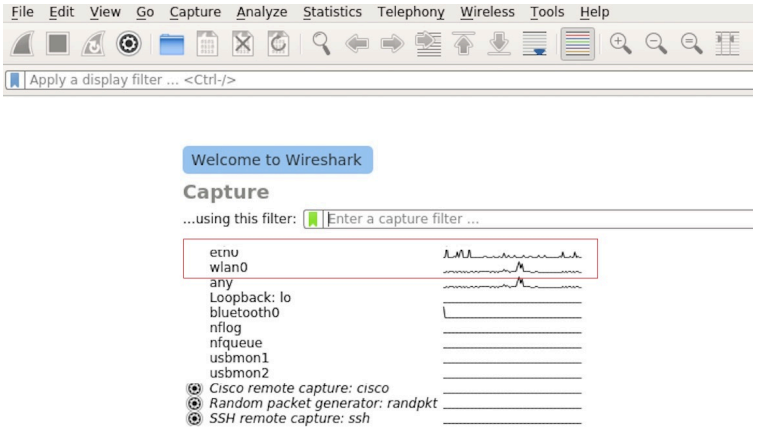

图 33: Wireshark 抓包界面

3) 选择接口，开始抓包

从上图红色框中可以看到有多个接口，第一个为本地网卡，第二个为无线网络。

可根据自己的需求选取相应的网卡，本文是以利用无线网卡抓取空中包为例进行简单说明。

双击 *wlan0* 即可开始抓包。

4) 设置过滤条件

抓包过程中会抓取到同信道所有的空中包，但其实很多都是我们不需要的，因此很多时候我们会设置抓包的过滤条件从而得到我们想要的包。

下图中红色框内即为设置 filter 的位置。

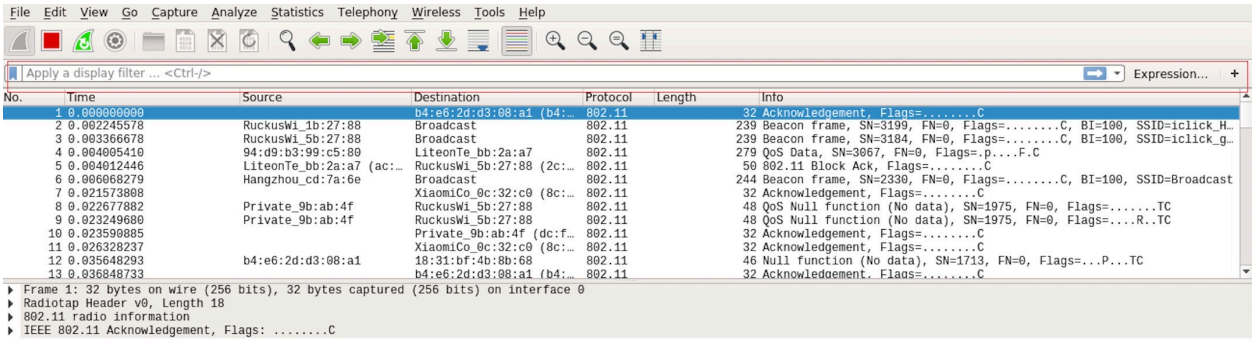

图 34: 设置 Wireshark 过滤条件

点击 *Filter* 按钮（下图的左上角蓝色按钮）会弹出 *display filter* 对话框。

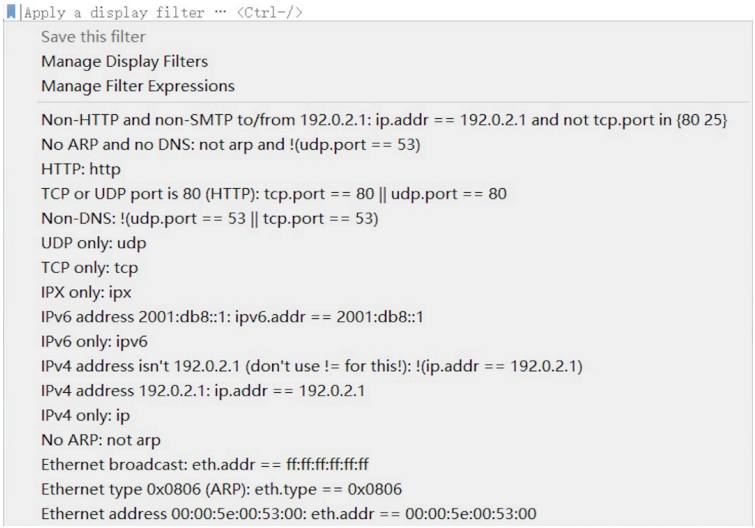

图 35: *Display Filter* 对话框

点击 *Expression* 按钮，会出现 *Filter Expression* 对话框，在此你可以根据需求进行 filter 的设置。

最直接的方法：直接在工具栏上输入过滤条件。

点击在此区域输入或修改显示的过滤字符，在输入过程中会进行语法检查。如果您输入的格式不正确，或者未输入完成，则背景显示为红色。直到您输入合法的表达式，背景会变为绿色。你可以点击下拉列表选择您

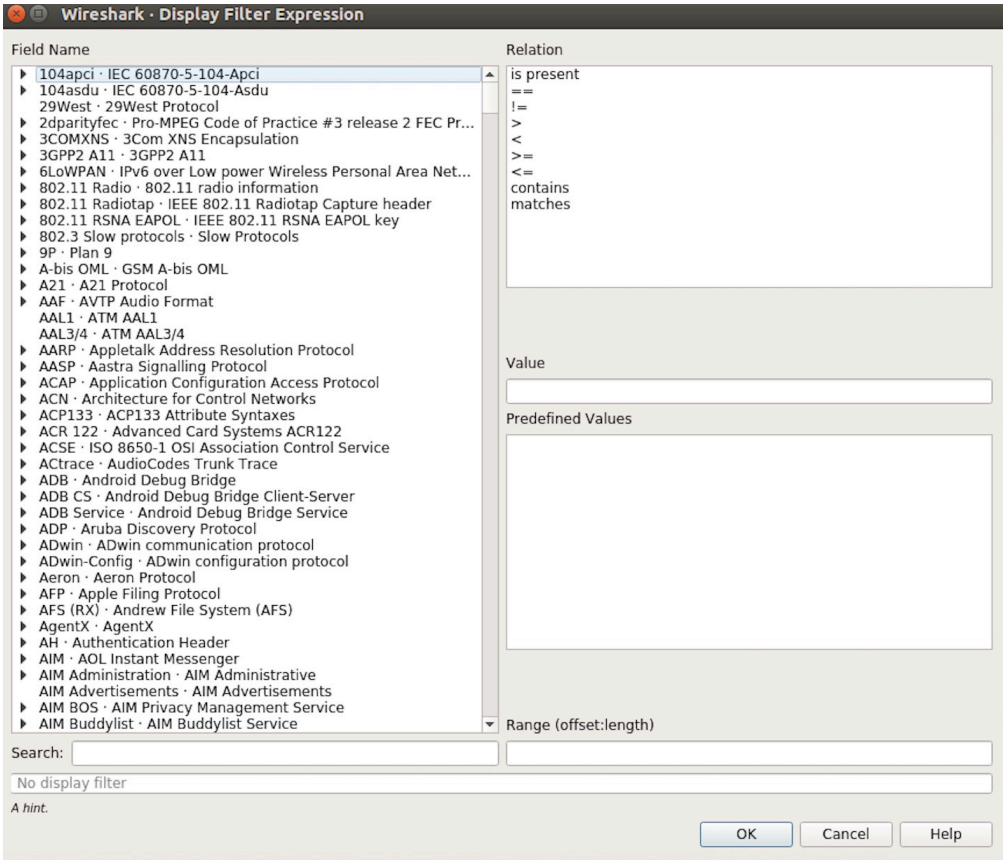

图 36: *Filter Expression* 对话框

图 37: 过滤条件工具栏

先前键入的过滤字符。列表会一直保留，即使您重新启动程序。

例如：下图所示，直接输入 2 个 MAC 作为过滤条件，点击 *Apply* （即图中的蓝色箭头），则表示只抓取 2 个此 MAC 地址之间的交互的包。

图 38: 在过滤条件工具栏中运用 MAC 地址过滤示例

5) 封包列表

若想查看包的具体的信息只需要选中要查看的包，在界面的下方会显示出包的具体的格式和包的内容。

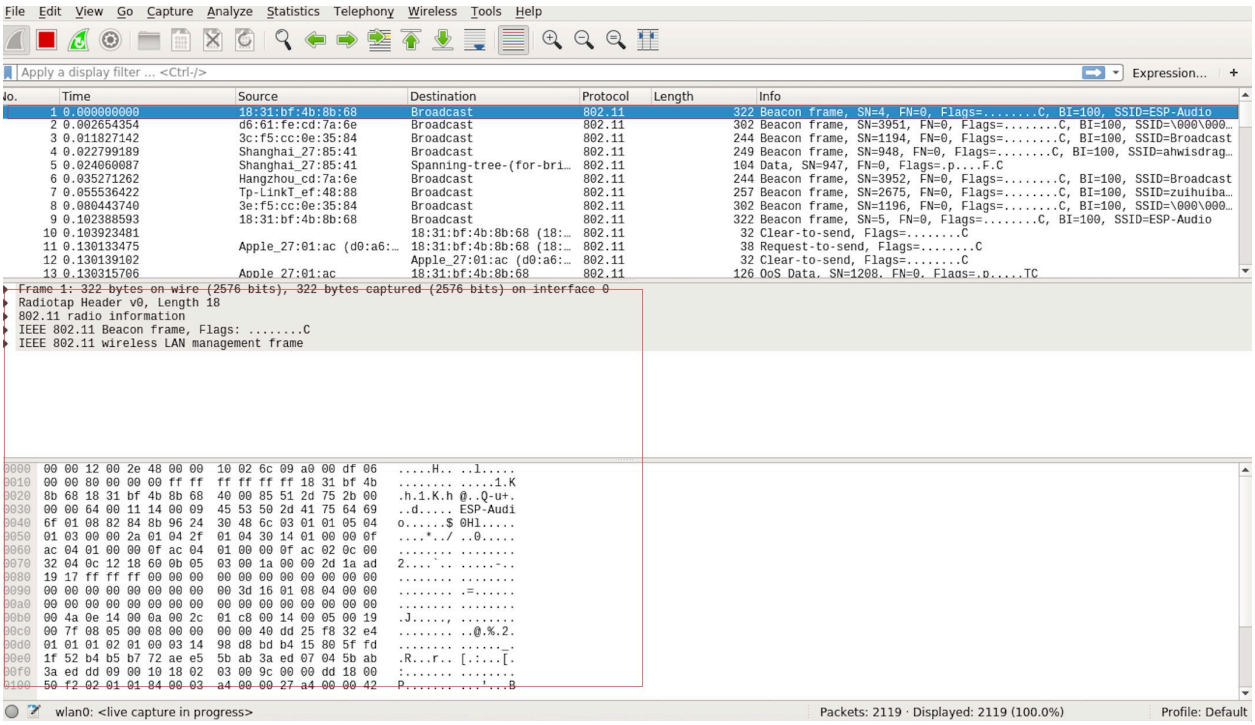

图 39: 封包列表具体信息示例

如上图所示，我要查看第 1 个包，选中此包，图中红色框中即为包的具体内容。

6) 停止/开始包的捕捉

若要停止当前抓包，点击下图的红色按钮即可。

若要重新开始抓包，点击下图左上角的蓝色按钮即可。

7) 保存当前捕捉包

Linux 下，可以通过依次点击 “File” -> “Export Packet Dissections” -> “As Plain Text File” 进行保存。

上图中，需要注意的是，选择 *All packets*、*Displayed* 以及 *All expanded* 三项。

Wireshark 捕捉的包可以保存为其原生格式文件（libpcap），也可以保存为其他格式（如.txt 文件）供其他工具进行读取分析。

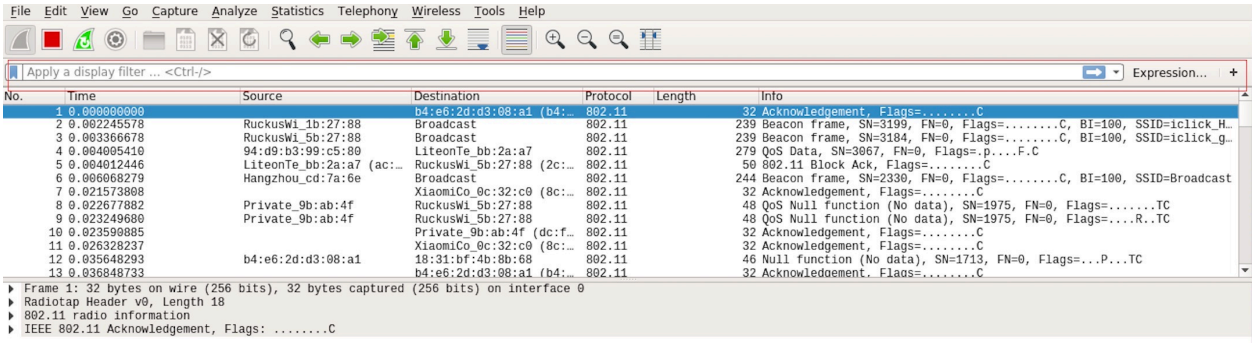

图 40: 停止包的捕捉

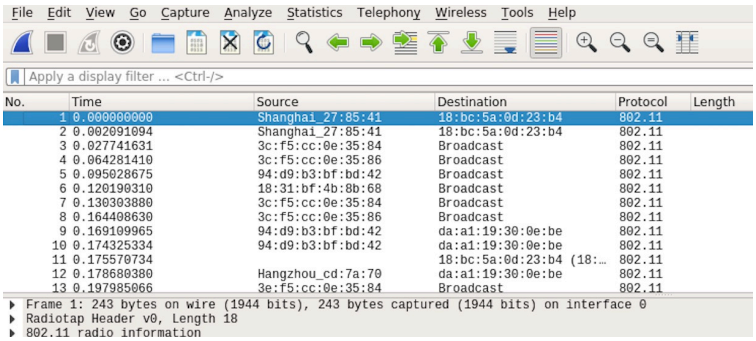

图 41: 开始或继续包的捕捉

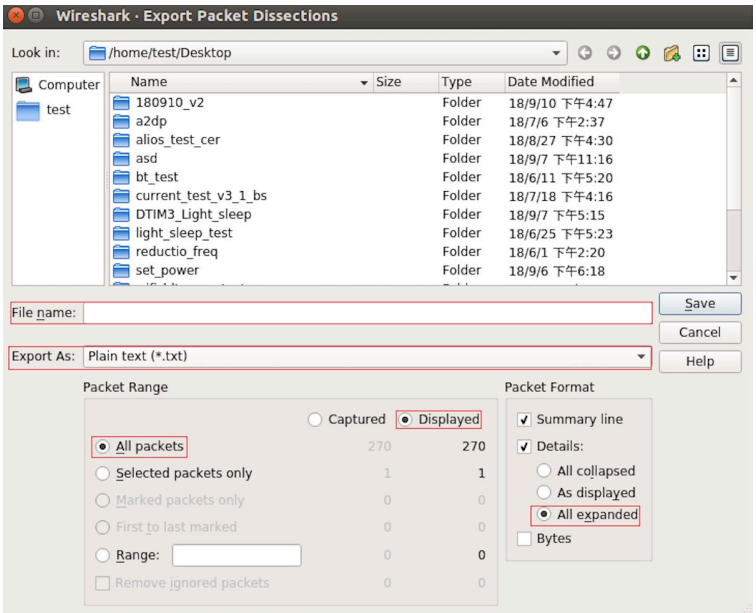

图 42: 保存捕捉包

5.24 ESP-MESH

This guide provides information regarding the ESP-MESH protocol. Please see the *MESH API Reference* for more information about API usage.

5.24.1 Overview

ESP-MESH is a networking protocol built atop the Wi-Fi protocol. ESP-MESH allows numerous devices (henceforth referred to as nodes) spread over a large physical area (both indoors and outdoors) to be interconnected under a single WLAN (Wireless Local-Area Network). ESP-MESH is self-organizing and self-healing meaning the network can be built and maintained autonomously.

The ESP-MESH guide is split into the following sections:

1. *Introduction*
2. *ESP-MESH Concepts*
3. *Building a Network*
4. *Managing a Network*
5. *Data Transmission*
6. *Channel Switching*
7. *Performance*
8. *Further Notes*

5.24.2 Introduction

A traditional infrastructure Wi-Fi network is a point-to-multipoint network where a single central node known as the access point (AP) is directly connected to all other nodes known as stations. The AP is responsible for arbitrating and forwarding transmissions between the stations. Some APs also relay transmissions to/from an external IP network via a router. Traditional infrastructure Wi-Fi networks suffer the disadvantage of limited coverage area due to the requirement that every station must be in range to directly connect with the AP. Furthermore, traditional Wi-Fi networks are susceptible to overloading as the maximum number of stations permitted in the network is limited by the capacity of the AP.

ESP-MESH differs from traditional infrastructure Wi-Fi networks in that nodes are not required to connect to a central node. Instead, nodes are permitted to connect with neighboring nodes. Nodes are mutually responsible for relaying each others transmissions. This allows an ESP-MESH network to have much greater coverage area as nodes can still achieve interconnectivity without needing to be in range of the central node. Likewise, ESP-MESH is also less susceptible to overloading as the number of nodes permitted on the network is no longer limited by a single central node.

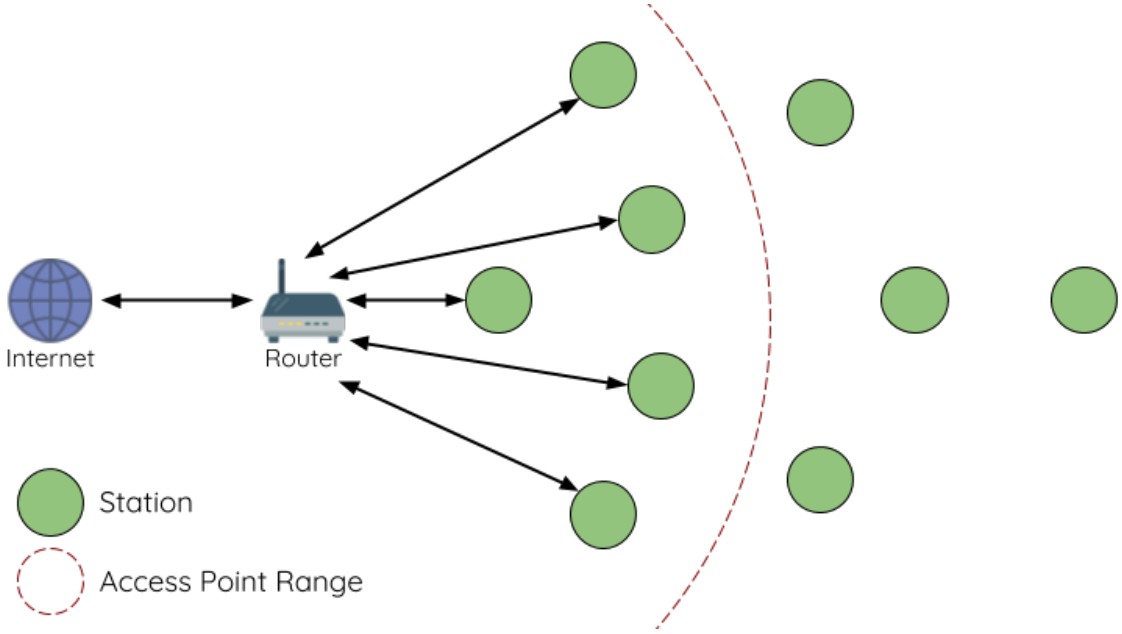

图 43: Traditional Wi-Fi Network Architectures

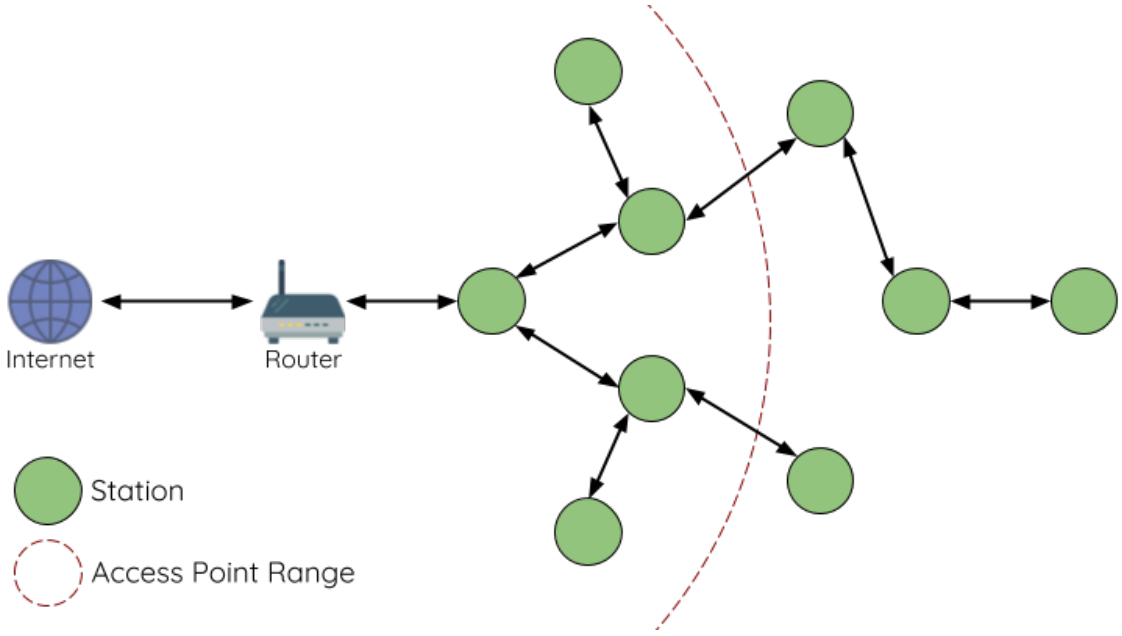

图 44: ESP-MESH Network Architecture

5.24.3 ESP-MESH Concepts

Terminology

Term	Description
Node	Any device that **is** or **can be** part of an ESP-MESH network
Root Node	The top node in the network
Child Node	A node X is a child node when it is connected to another node Y where the connection makes node X more distant from the root node than node Y (in terms of number of connections).
Parent Node	The converse notion of a child node
Sub-Child Node	Any node reachable by repeated proceeding from parent to child
Sibling Nodes	Nodes that share the same parent node
Connection	A traditional Wi-Fi association between an AP and a station. A node in ESP-MESH will use its station interface to associate with the softAP interface of another node, thus forming a connection. The connection process includes the authentication and association processes in Wi-Fi.
Upstream Connection	The connection from a node to its parent node
Downstream Connection	The connection from a node to one of its child nodes
Wireless Hop	The portion of the path between source and destination nodes that corresponds to a single wireless connection. A data packet that traverses a single connection is known as **single-hop** whereas traversing multiple connections is known as **multi-hop**.
Subnetwork	A subnetwork is subdivision of an ESP-MESH network which consists of a node and all of its descendant nodes. Therefore the subnetwork of the root node consists of all nodes in an ESP-MESH network.
MAC Address	Media Access Control Address used to uniquely identify each node or router within an ESP-MESH network.
DS	Distribution System (External IP Network)

Tree Topology

ESP-MESH is built atop the infrastructure Wi-Fi protocol and can be thought of as a networking protocol that combines many individual Wi-Fi networks into a single WLAN. In Wi-Fi, stations are limited to a single connection with an AP (upstream connection) at any time, whilst an AP can be simultaneously connected to multiple stations (downstream connections). However ESP-MESH allows nodes to simultaneously act as a station and an AP. Therefore a node in ESP-MESH can have **multiple downstream connections using its softAP interface**, whilst simultaneously having **a single upstream connection using its station interface**. This naturally results in a tree network topology with a parent-child hierarchy consisting of multiple layers.

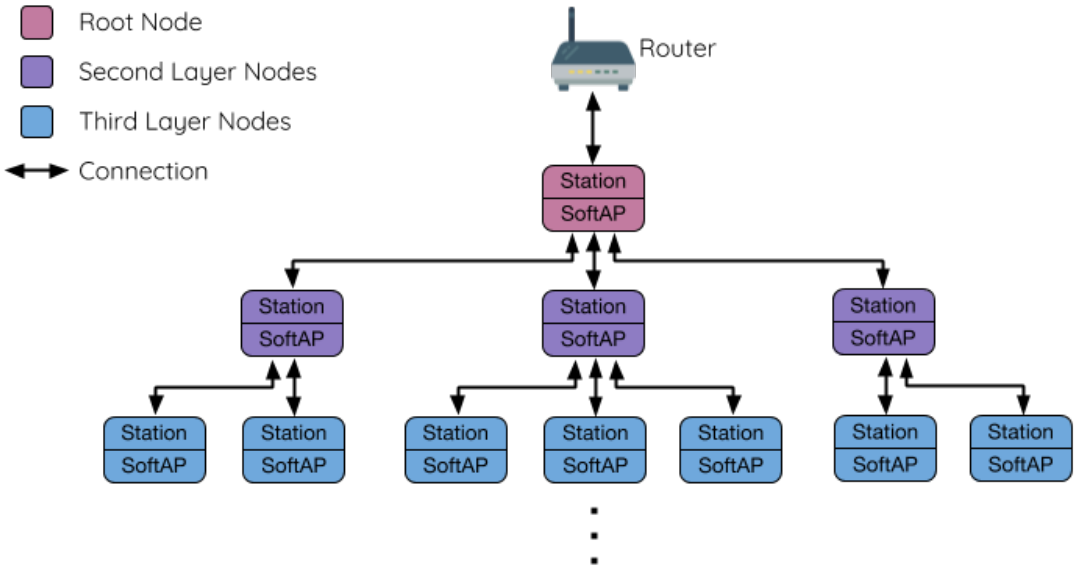

图 45: ESP-MESH Tree Topology

ESP-MESH is a multiple hop (multi-hop) network meaning nodes can transmit packets to other nodes in the network through one or more wireless hops. Therefore, nodes in ESP-MESH not only transmit their own packets, but simultaneously serve as relays for other nodes. Provided that a path exists between any two nodes on the physical layer (via one or more wireless hops), any pair of nodes within an ESP-MESH network can communicate.

注解: The size (total number of nodes) in an ESP-MESH network is dependent on the maximum number of layers permitted in the network, and the maximum number of downstream connections each node can have. Both of these variables can be configured to limit the size of the network.

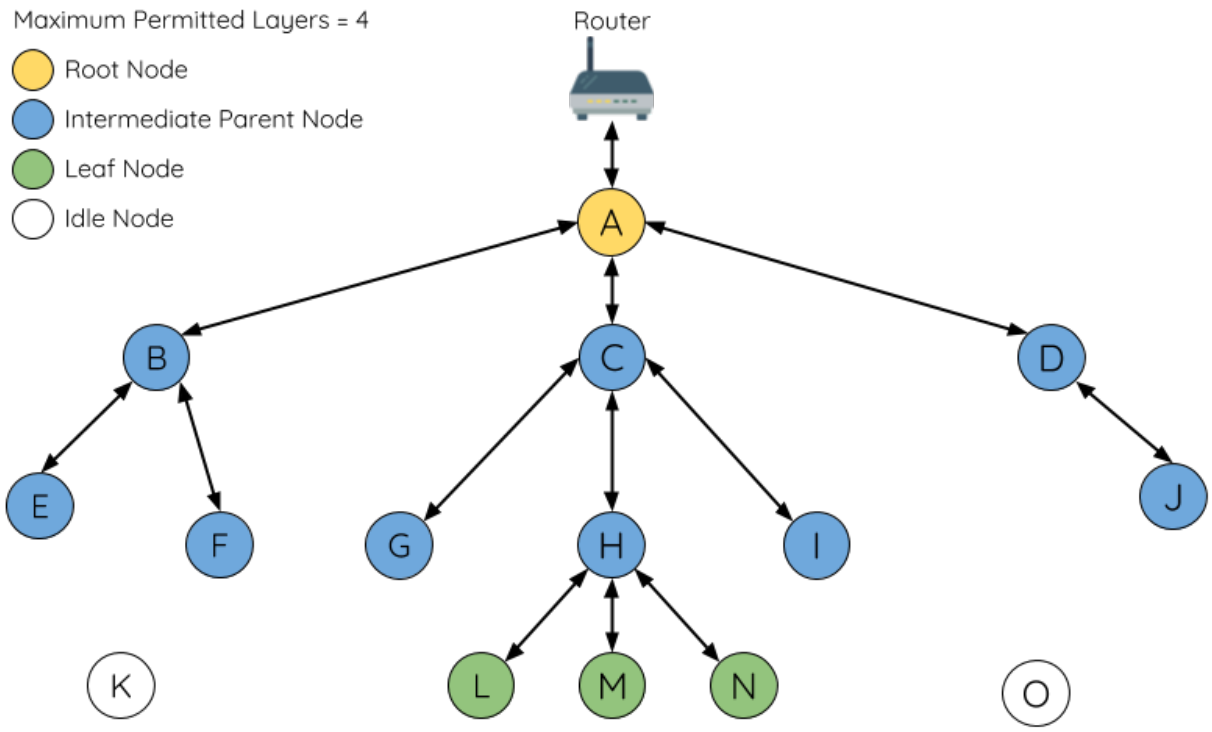

图 46: ESP-MESH Node Types

Node Types

Root Node: The root node is the top node in the network and serves as the only interface between the ESP-MESH network and an external IP network. The root node is connected to a conventional Wi-Fi router and relays packets to/from the external IP network to nodes within the ESP-MESH network. **There can only be one root node within an ESP-MESH network** and the root node' s upstream connection may only be with the router. Referring to the diagram above, node A is the root node of the network.

Leaf Nodes: A leaf node is a node that is not permitted to have any child nodes (no downstream connections). Therefore a leaf node can only transmit or receive its own packets, but cannot forward the packets of other nodes. If a node is situated on the network' s maximum permitted layer, it will be assigned as a leaf node. This prevents the node from forming any downstream connections thus ensuring the network does not add an extra layer. Some nodes without a softAP interface (station only) will also be assigned as leaf nodes due to the requirement of a softAP interface for any downstream connections. Referring to the diagram above, nodes L/M/N are situated on the networks maximum permitted layer hence have been assigned as leaf nodes .

Intermediate Parent Nodes: Connected nodes that are neither the root node or a leaf node are intermediate parent nodes. An intermediate parent node must have a single upstream connection (a single parent node), but can have zero to multiple downstream connections (zero to multiple child nodes). Therefore an intermediate parent node can transmit and receive packets, but also forward packets sent from its upstream

and downstream connections. Referring to the diagram above, nodes B to J are intermediate parent nodes. **Intermediate parent nodes without downstream connections such as nodes E/F/G/I/J are not equivalent to leaf nodes** as they are still permitted to form downstream connections in the future.

Idle Nodes: Nodes that have yet to join the network are assigned as idle nodes. Idle nodes will attempt to form an upstream connection with an intermediate parent node or attempt to become the root node under the correct circumstances (see *Automatic Root Node Selection*). Referring to the diagram above, nodes K and O are idle nodes.

Beacon Frames & RSSI Thresholding

Every node in ESP-MESH that is able to form downstream connections (i.e. has a softAP interface) will periodically transmit Wi-Fi beacon frames. A node uses beacon frames to allow other nodes to detect its presence and know of its status. Idle nodes will listen for beacon frames to generate a list of potential parent nodes, one of which the idle node will form an upstream connection with. ESP-MESH uses the Vendor Information Element to store metadata such as:

- Node Type (Root, Intermediate Parent, Leaf, Idle)
- Current layer of Node
- Maximum number of layers permitted in the network
- Current number of child nodes
- Maximum number of downstream connections to accept

The signal strength of a potential upstream connection is represented by RSSI (Received Signal Strength Indication) of the beacon frames of the potential parent node. To prevent nodes from forming a weak upstream connection, ESP-MESH implements an RSSI threshold mechanism for beacon frames. If a node detects a beacon frame with an RSSI below a preconfigured threshold, the transmitting node will be disregarded when forming an upstream connection.

Panel A of the illustration above demonstrates how the RSSI threshold affects the number of parent node candidates an idle node has.

Panel B of the illustration above demonstrates how an RF shielding object can lower the RSSI of a potential parent node. Due to the RF shielding object, the area in which the RSSI of node X is above the threshold is significantly reduced. This causes the idle node to disregard node X even though node X is physically adjacent. The idle node will instead form an upstream connection with the physically distant node Y due to a stronger RSSI.

注解: Nodes technically still receive all beacon frames on the MAC layer. The RSSI threshold is an ESP-MESH feature that simply filters out all received beacon frames that are below the preconfigured threshold.

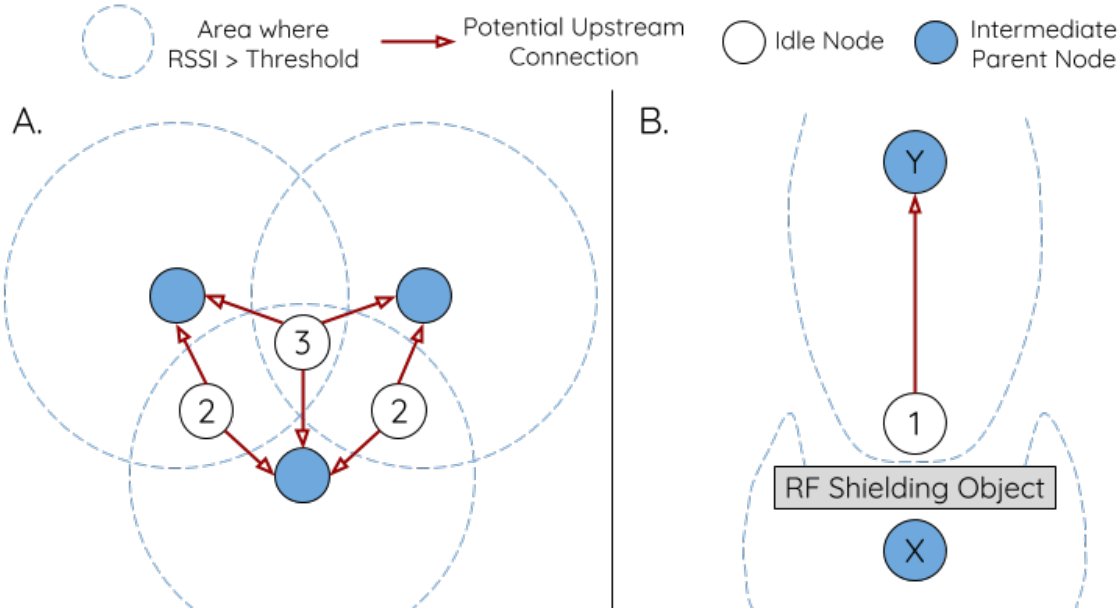

图 47: Effects of RSSI Thresholding

Preferred Parent Node

When an idle node has multiple parent nodes candidates (potential parent nodes), the idle node will form an upstream connection with the **preferred parent node**. The preferred parent node is determined based on the following criteria:

- Which layer the parent node candidate is situated on
- The number of downstream connections (child nodes) the parent node candidate currently has

The selection of the preferred parent node will always prioritize the parent node candidate on the shallowest layer of the network (including the root node). This helps minimize the total number of layers in an ESP-MESH network when upstream connections are formed. For example, given a second layer node and a third layer node, the second layer node will always be preferred.

If there are multiple parent node candidates within the same layer, the parent node candidate with the least child nodes will be preferred. This criteria has the effect of balancing the number of downstream connections amongst nodes of the same layer.

Panel A of the illustration above demonstrates an example of how the idle node G selects a preferred parent node given the five parent node candidates B/C/D/E/F. Nodes on the shallowest layer are preferred, hence nodes B/C are prioritized since they are second layer nodes whereas nodes D/E/F are on the third layer. Node C is selected as the preferred parent node due it having fewer downstream connections (fewer child nodes) compared to node B.

Panel B of the illustration above demonstrates the case where the root node is within range of the idle node G. In other words, the root node’ s beacon frames are above the RSSI threshold when received by node G.

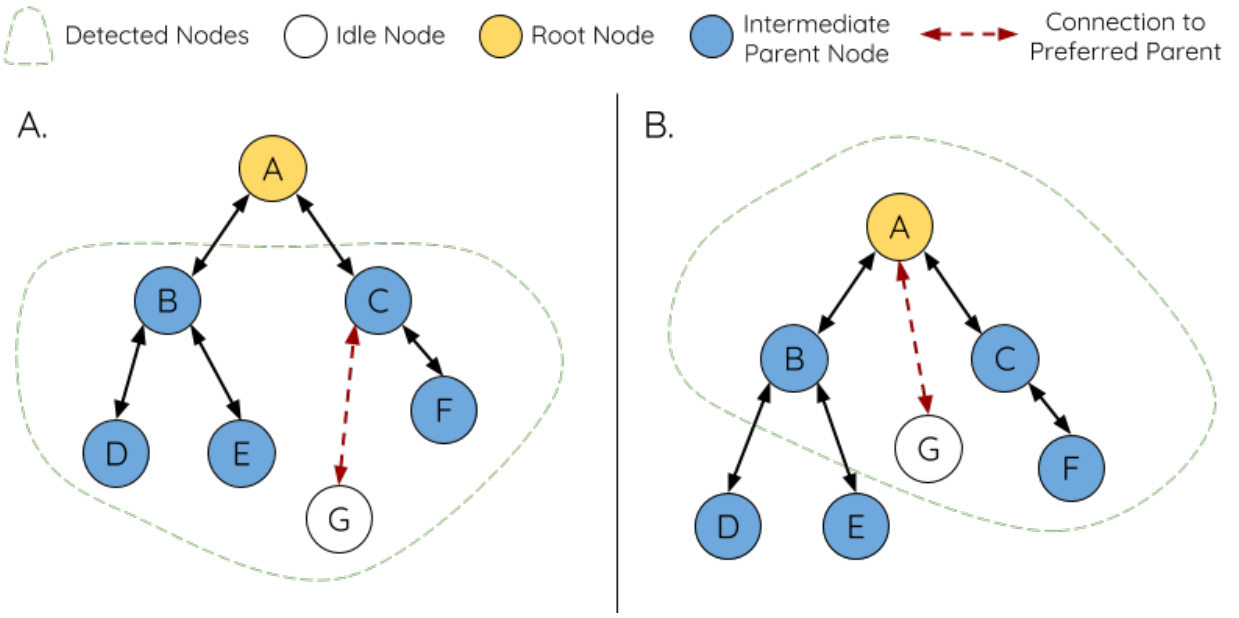

图 48: Preferred Parent Node Selection

The root node is always the shallowest node in an ESP-MESH network hence is always the preferred parent node given multiple parent node candidates.

注解: Users may also define their own algorithm for selecting a preferred parent node, or force a node to only connect with a specific parent node (see the Mesh Manual Networking Example).

Routing Tables

Each node within an ESP-MESH network will maintain its individual routing table used to correctly route ESP-MESH packets (see *ESP-MESH Packet*) to the correct destination node. The routing table of a particular node will **consist of the MAC addresses of all nodes within the particular node' s subnetwork** (including the MAC address of the particular node itself). Each routing table is internally partitioned into multiple subtables with each subtable corresponding to the subnetwork of each child node.

Using the diagram above as an example, the routing table of node B would consist of the MAC addresses of nodes B to I (i.e. equivalent to the subnetwork of node B). Node B' s routing table is internally partitioned into two subtables containing of nodes C to F and nodes G to I (i.e. equivalent to the subnetworks of nodes C and G respectively).

ESP-MESH utilizes routing tables to determine whether an ESP-MESH packet should be forwarded upstream or downstream based on the following rules.

1. If the packet' s destination MAC address is within the current node' s routing table and is not the current node, select the subtable that contains the destination MAC address and forward the data packet

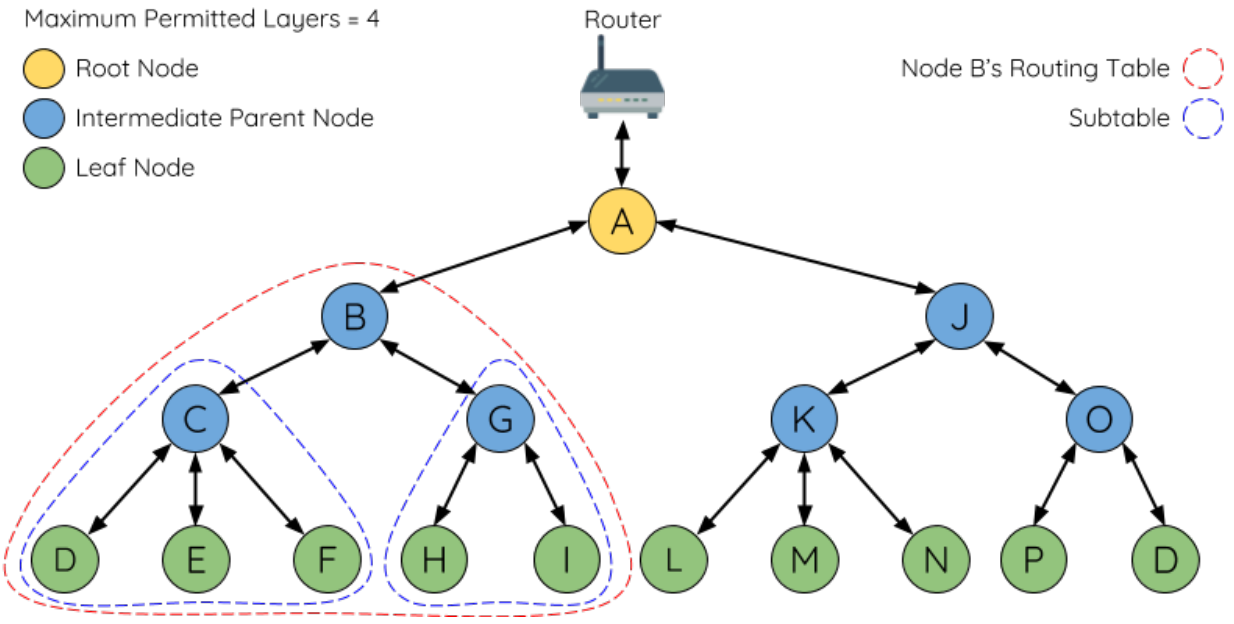

图 49: ESP-MESH Routing Tables Example

downstream to the child node corresponding to the subtable.

2. If the destination MAC address is not within the current node' s routing table, forward the data packet upstream to the current node' s parent node. Doing so repeatedly will result in the packet arriving at the root node where the routing table should contain all nodes within the network.

注解: Users can call *esp_mesh_get_routing_table()* to obtain a node' s routing table, or *esp_mesh_get_routing_table_size()* to obtain the size of a node' s routing table.

esp_mesh_get_subnet_nodes_list() can be used to obtain the corresponding subtable of a specific child node. Likewise *esp_mesh_get_subnet_nodes_num()* can be used to obtain the size of the subtable.

5.24.4 Building a Network

General Process

警告: Before the ESP-MESH network building process can begin, certain parts of the configuration must be uniform across each node in the network (see *mesh_cfg_t*). Each node must be configured with **the same Mesh Network ID, router configuration, and softAP configuration**.

An ESP-MESH network building process involves selecting a root node, then forming downstream connections layer by layer until all nodes have joined the network. The exact layout of the network can be dependent

on factors such as root node selection, parent node selection, and asynchronous power-on reset. However, the ESP-MESH network building process can be generalized into the following steps:

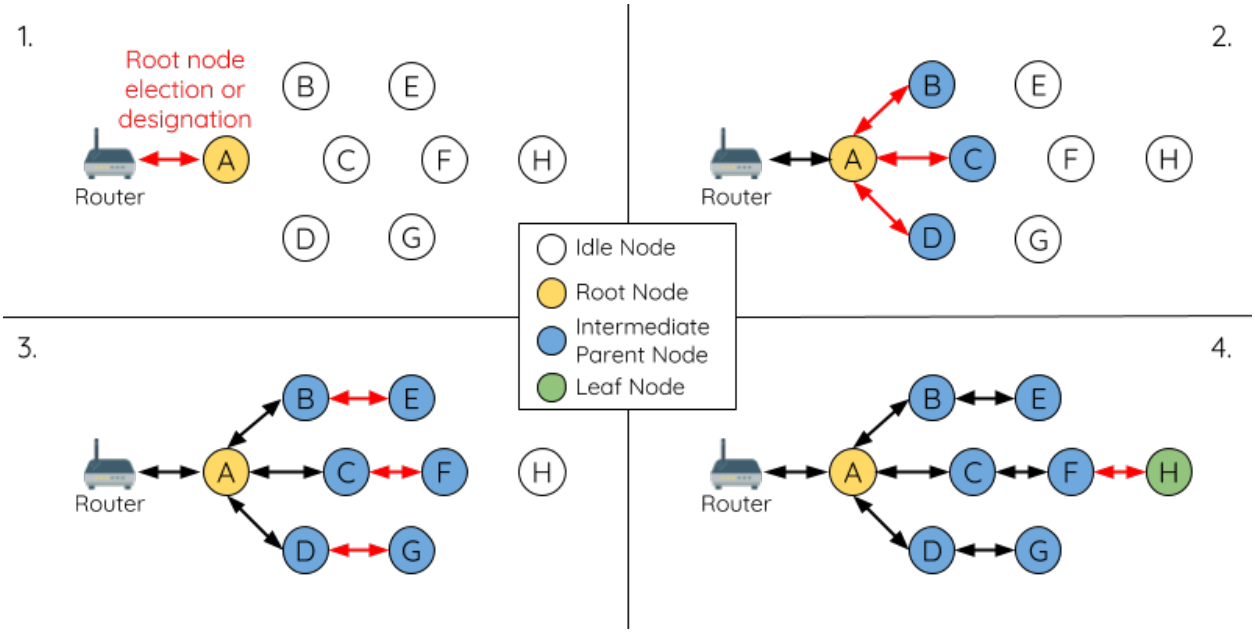

图 50: ESP-MESH Network Building Process

1. Root Node Selection

The root node can be designated during configuration (see section on *User Designated Root Node*), or dynamically elected based on the signal strength between each node and the router (see *Automatic Root Node Selection*). Once selected, the root node will connect with the router and begin allowing downstream connections to form. Referring to the figure above, node A is selected to be the root node hence node A forms an upstream connection with the router.

2. Second Layer Formation

Once the root node has connected to the router, idle nodes in range of the root node will begin connecting with the root node thereby forming the second layer of the network. Once connected, the second layer nodes become intermediate parent nodes (assuming maximum permitted layers > 2) hence the next layer to form. Referring to the figure above, nodes B to D are in range of the root node. Therefore nodes B to D form upstream connections with the root node and become intermediate parent nodes.

3. Formation of remaining layers

The remaining idle nodes will connect with intermediate parent nodes within range thereby forming a new layer in the network. Once connected, the idles nodes become intermediate parent node or leaf nodes

depending on the networks maximum permitted layers. This step is repeated until there are no more idle nodes within the network or until the maximum permitted layer of the network has been reached. Referring to the figure above, nodes E/F/G connect with nodes B/C/D respectively and become intermediate parent nodes themselves.

4. Limiting Tree Depth

To prevent the network from exceeding the maximum permitted number of layers, nodes on the maximum layer will automatically become leaf nodes once connected. This prevents any other idle node from connecting with the leaf node thereby prevent a new layer form forming. However if an idle node has no other potential parent node, it will remain idle indefinitely. Referring to the figure above, the network' s maximum permitted layers is set to four. Therefore when node H connects, it becomes a leaf node to prevent any downstream connections from forming.

Automatic Root Node Selection

The automatic selection of a root node involves an election process amongst all idle nodes based on their signal strengths with the router. Each idle node will transmit their MAC addresses and router RSSI values via Wi-Fi beacon frames. **The MAC address is used to uniquely identify each node in the network** whilst the **router RSSI** is used to indicate a node' s signal strength with reference to the router.

Each node will then simultaneously scan for the beacon frames from other idle nodes. If a node detects a beacon frame with a stronger router RSSI, the node will begin transmitting the contents of that beacon frame (i.e. voting for the node with the stronger router RSSI). The process of transmission and scanning will repeat for a preconfigured minimum number of iterations (10 iterations by default) and result in the beacon frame with the strongest router RSSI being propagated throughout the network.

After all iterations, each node will individually check for its **vote percentage** (`number of votes/number of nodes participating in election`) to determine if it should become the root node. **If a node has a vote percentage larger than a preconfigured threshold (90% by default), the node will become a root node**.

The following diagram demonstrates how an ESP-MESH network is built when the root node is automatically selected.

1. On power-on reset, each node begins transmitting beacon frames consisting of their own MAC addresses and their router RSSIs.

2. Over multiple iterations of transmission and scanning, the beacon frame with the strongest router RSSI is propagated throughout the network. Node C has the strongest router RSSI (-10db) hence its beacon frame is propagated throughout the network. All nodes participating in the election vote for node C thus giving node C a vote percentage of 100%. Therefore node C becomes a root node and connects with the router.

3. Once Node C has connected with the router, nodes A/B/D/E connectwith node C as it is the preferred parent node (i.e. the shallowest node). Nodes A/B/D/E form the second layer of the network.

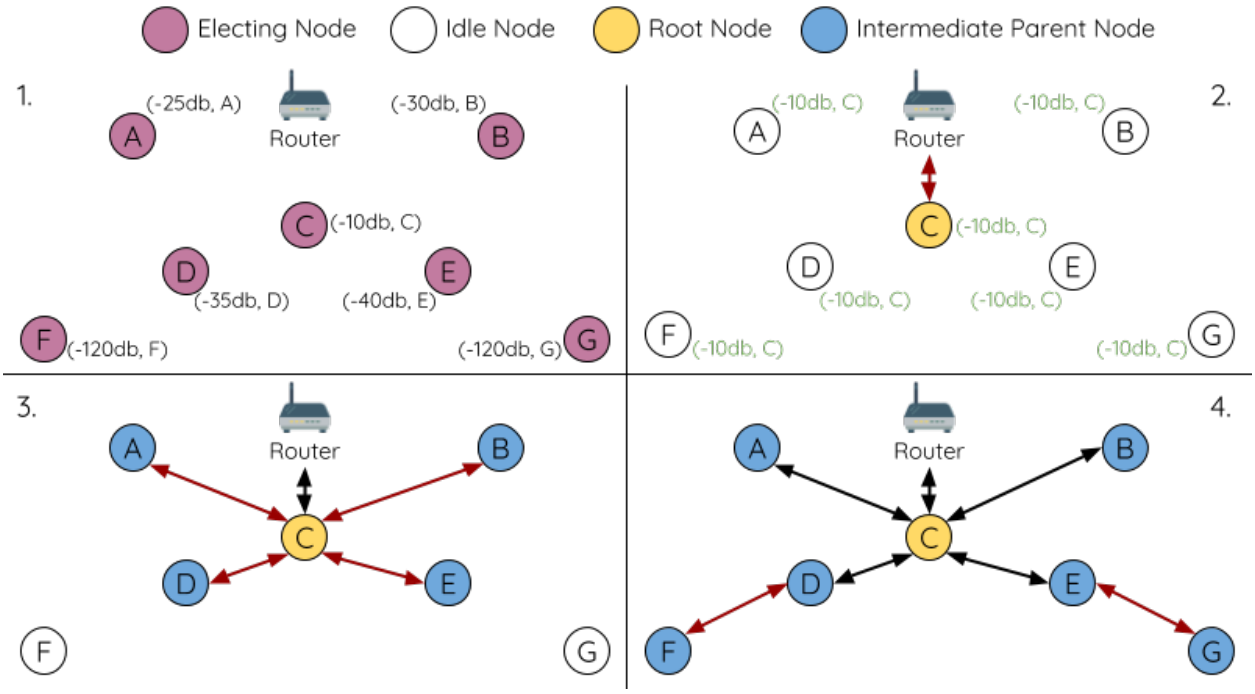

图 51: Root Node Election Example

4. Node F and G connect with nodes D and E respectively and the network building process is complete.

注解: The minimum number of iterations for the election process can be configured using `esp_mesh_set_attempts()`. Users should adjust the number of iterations based on the number of nodes within the network (i.e. the larger the network the larger number of scan iterations required).

警告: **Vote percentage threshold** can also be configured using *`esp_mesh_set_vote_percentage()`*. Setting a low vote percentage threshold **can result in two or more nodes becoming root nodes** within the same ESP-MESH network leading to the building of multiple networks. If such is the case, ESP-MESH has internal mechanisms to autonomously resolve the **root node conflict**. The networks of the multiple root nodes will be combined into a single network with a single root node. However, root node conflicts where two or more root nodes have the same router SSID but different router BSSID are not handled.

User Designated Root Node

The root node can also be designated by user which will entail the designated root node to directly connect with the router and forgo the election process. When a root node is designated, all other nodes within the network must also forgo the election process to prevent the occurrence of a root node conflict. The following

diagram demonstrates how an ESP-MESH network is built when the root node is designated by the user.

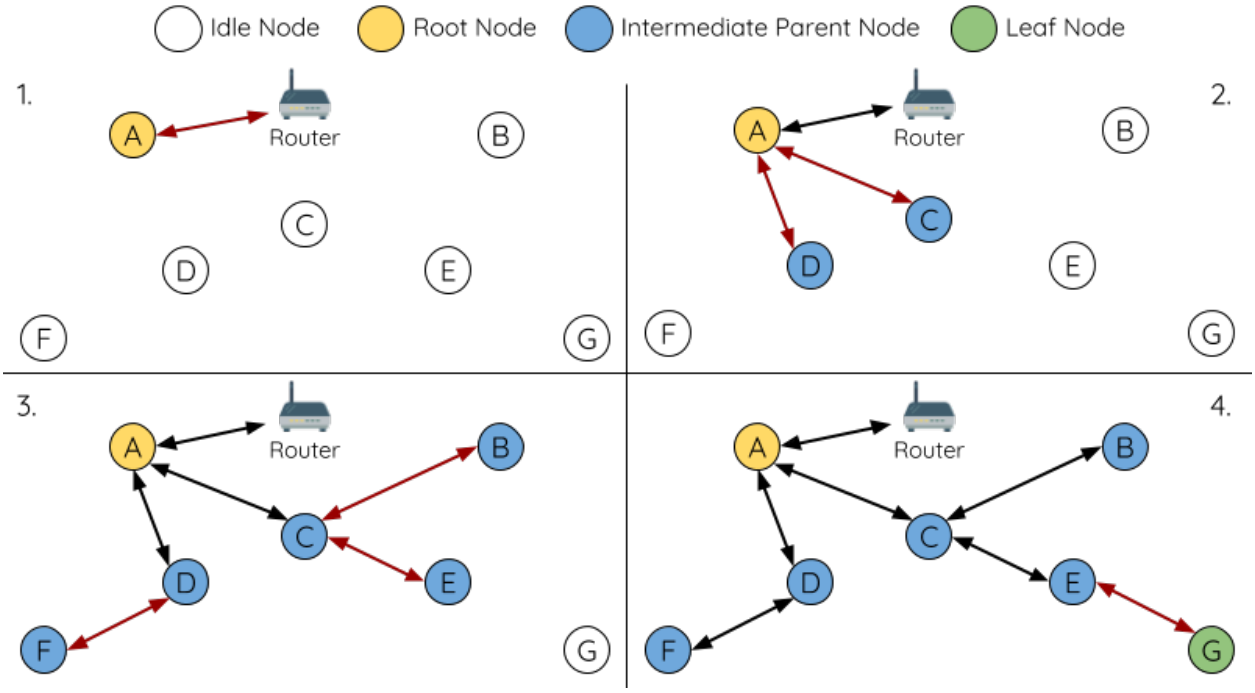

图 52: Root Node Designation Example (Root Node = A, Max Layers = 4)

1. Node A is designated the root node by the user therefore directly connects with the router. All other nodes forgo the election process.

2. Nodes C/D connect with node A as their preferred parent node. Both nodes form the second layer of the network.

3. Likewise, nodes B/E connect with node C, and node F connects with node D. Nodes B/E/F form the third layer of the network.

4. Node G connects with node E, forming the fourth layer of the network. However the maximum permitted number of layers in this network is configured as four, therefore node G becomes a leaf node to prevent any new layers from forming.

注解: When designating a root node, the root node should call *esp_mesh_set_parent()* in order to directly connect with the router. Likewise, all other nodes should call *esp_mesh_fix_root()* to forgo the election process.

Parent Node Selection

By default, ESP-MESH is self organizing meaning that each node will autonomously select which potential parent node to form an upstream connection with. The autonomously selected parent node is known as the

preferred parent node. The criteria used for selecting the preferred parent node is designed to reduce the number of layers in the ESP-MESH network and to balance the number of downstream connections between potential parent nodes (see section on *Preferred Parent Node*).

However ESP-MESH also allows users to disable self-organizing behavior which will allow users to define their own criteria for parent node selection, or to configure nodes to have designated parent nodes (see the Mesh Manual Networking Example).

Asynchronous Power-on Reset

ESP-MESH network building can be affected by the order in which nodes power-on. If certain nodes within the network power-on asynchronously (i.e. separated by several minutes), **the final structure of the network could differ from the ideal case where all nodes are powered on synchronously**. Nodes that are delayed in powering on will adhere to the following rules:

Rule 1: If a root node already exists in the network, the delayed node will not attempt to elect a new root node, even if it has a stronger RSSI with the router. The delayed node will instead join the network like any other idle node by connecting with a preferred parent node. If the delayed node is the designated root node, all other nodes in the network will remain idle until the delayed node powers-on.

Rule 2: If a delayed node forms an upstream connection and becomes an intermediate parent node, it may also become the new preferred parent of other nodes (i.e. being a shallower node). This will cause the other nodes to switch their upstream connections to connect with the delayed node (see *Parent Node Switching*).

Rule 3: If an idle node has a designated parent node which is delayed in powering-on, the idle node will not attempt to form any upstream connections in the absence of its designated parent node. The idle node will remain idle indefinitely until its designated parent node powers-on.

The following example demonstrates the effects of asynchronous power-on with regards to network building.

1. Nodes A/C/D/F/G/H are powered-on synchronously and begin the root node election process by broadcasting their MAC addresses and router RSSIs. Node A is elected as the root node as it has the strongest RSSI.

2. Once node A becomes the root node, the remaining nodes begin forming upstream connections layer by layer with their preferred parent nodes. The result is a network with five layers.

3. Node B/E are delayed in powering-on but neither attempt to become the root node even though they have stronger router RSSIs (-20db and -10db) compared to node A. Instead both delayed nodes form upstream connections with their preferred parent nodes A and C respectively. Both Nodes B/E become intermediate parent nodes after connecting.

4. Nodes D/G switch their upstream connections as node B is the new preferred parent node due to it being on a shallower layer (second layer node). Due to the switch, the resultant network has three layers instead of the original five layers.

Synchronous Power-On: Had all nodes powered-on synchronously, node E would have become the root node as it has the strongest router RSSI (-10db). This would result in a significantly different network

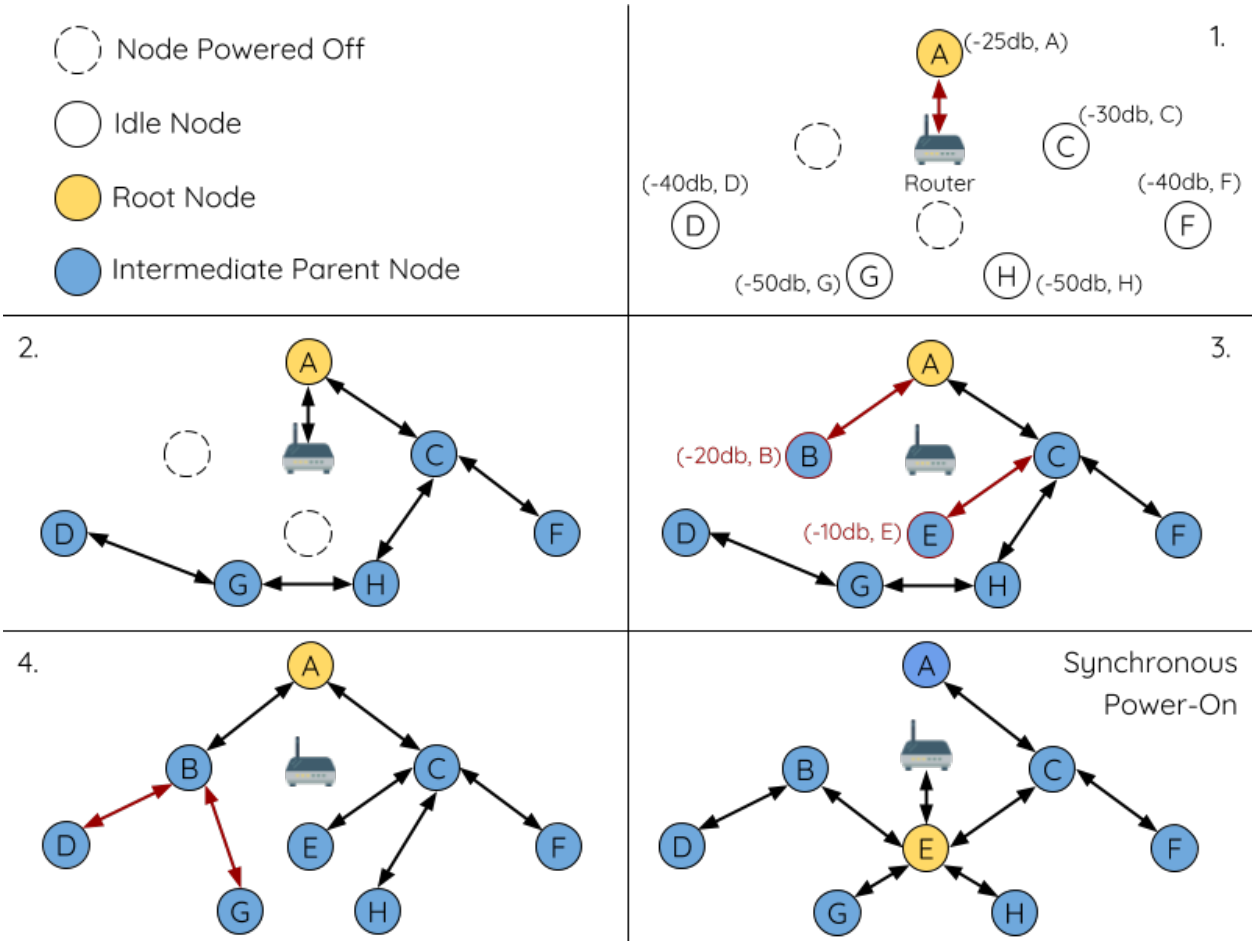

图 53: Network Building with Asynchronous Power On Example

layout compared to the network formed under the conditions of asynchronous power-on. **However the synchronous power-on network layout can still be reached if the user manually switches the root node** (see *esp_mesh_waive_root()*).

注解: Differences in parent node selection caused by asynchronous power-on are autonomously corrected for to some extent in ESP-MESH (see *Parent Node Switching*)

Loop-back Avoidance, Detection, and Handling

A loop-back is the situation where a particular node forms an upstream connection with one of its descendant nodes (a node within the particular node' s subnetwork). This results in a circular connection path thereby breaking the tree topology. ESP-MESH prevents loop-back during parent selection by excluding nodes already present in the selecting node' s routing table (see *Routing Tables*) thus prevents a particular node from attempting to connect to any node within its subnetwork.

In the event that a loop-back occurs, ESP-MESH utilizes a path verification mechanism and energy transfer mechanism to detect the loop-back occurrence. The parent node of the upstream connection that caused the loop-back will then inform the child node of the loop-back and initiate a disconnection.

5.24.5 Managing a Network

ESP-MESH is a self healing network meaning it can detect and correct for failures in network routing. Failures occur when a parent node with one or more child nodes breaks down, or when the connection between a parent node and its child nodes becomes unstable. Child nodes in ESP-MESH will autonomously select a new parent node and form an upstream connection with it to maintain network interconnectivity. ESP-MESH can handle both Root Node Failures and Intermediate Parent Node Failures.

Root Node Failure

If the root node breaks down, the nodes connected with it (second layer nodes) will promptly detect the failure of the root node. The second layer nodes will initially attempt to reconnect with the root node. However after multiple failed attempts, the second layer nodes will initialize a new round of root node election. **The second layer node with the strongest router RSSI will be elected as the new root node** whilst the remaining second layer nodes will form an upstream connection with the new root node (or a neighboring parent node if not in range).

If the root node and multiple downstream layers simultaneously break down (e.g. root node, second layer, and third layer), the shallowest layer that is still functioning will initialize the root node election. The following example illustrates an example of self healing from a root node break down.

1. Node C is the root node of the network. Nodes A/B/D/E are second layer nodes connected to node C.

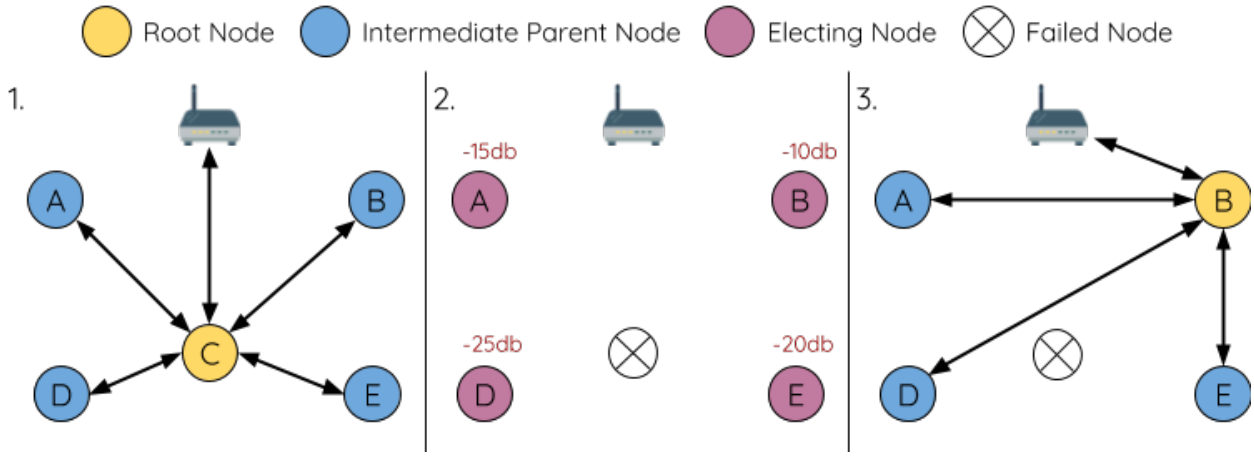

图 54: Self Healing From Root Node Failure

2. Node C breaks down. After multiple failed attempts to reconnect, the second layer nodes begin the election process by broadcasting their router RSSIs. Node B has the strongest router RSSI.

3. Node B is elected as the root node and begins accepting downstream connections. The remaining second layer nodes A/D/E form upstream connections with node B thus the network is healed and can continue operating normally.

注解: If a designated root node breaks down, the remaining nodes **will not autonomously attempt to elect a new root node** as an election process will never be attempted whilst a designated root node is used.

Intermediate Parent Node Failure

If an intermediate parent node breaks down, the disconnected child nodes will initially attempt to reconnect with the parent node. After multiple failed attempts to reconnect, each child node will begin to scan for potential parent nodes (see *Beacon Frames & RSSI Thresholding*).

If other potential parent nodes are available, each child node will individually select a new preferred parent node (see *Preferred Parent Node*) and form an upstream connection with it. If there are no other potential parent nodes for a particular child node, it will remain idle indefinitely.

The following diagram illustrates an example of self healing from an Intermediate Parent Node break down.

1. The following branch of the network consists of nodes A to G.

2. Node C breaks down. Nodes F/G detect the break down and attempt to reconnect with node C. After multiple failed attempts to reconnect, nodes F/G begin to select a new preferred parent node.

3. Node G is out of range from any other parent node hence remains idle for the time being. Node F is in range of nodes B/E, however node B is selected as it is the shallower node. Node F becomes an intermediate

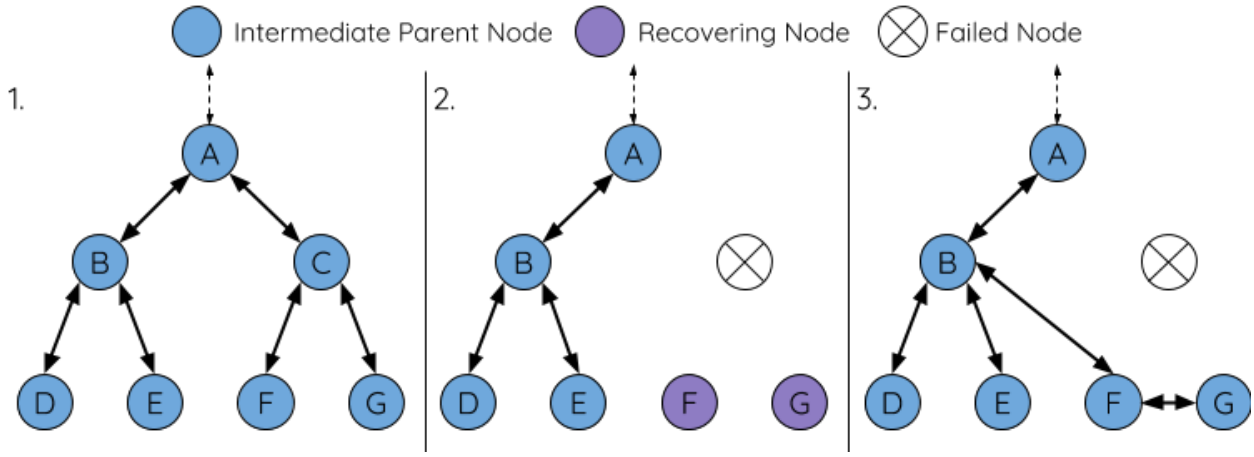

图 55: Self Healing From Intermediate Parent Node Failure

parent node after connecting with Node B thus node G can connect with node F. The network is healed, however the network routing as been affected and an extra layer has been added.

注解: If a child node has a designated parent node that breaks down, the child node will make no attempt to connect with a new parent node. The child node will remain idle indefinitely.

Root Node Switching

ESP-MESH does not automatically switch the root node unless the root node breaks down. Even if the root node' s router RSSI degrades to the point of disconnection, the root node will remain unchanged. Root node switching is the act of explicitly starting a new election such that a node with a stronger router RSSI will be elected as the new root node. This can be a useful method of adapting to degrading root node performance.

To trigger a root node switch, the current root node must explicitly call *esp_mesh_waive_root()* to trigger a new election. The current root node will signal all nodes within the network to begin transmitting and scanning for beacon frames (see *Automatic Root Node Selection*) **whilst remaining connected to the network (i.e. not idle)**. If another node receives more votes than the current root node, a root node switch will be initiated. **The root node will remain unchanged otherwise**.

A newly elected root node sends a **switch request** to the current root node which in turn will respond with an acknowledgment signifying both nodes are ready to switch. Once the acknowledgment is received, the newly elected root node will disconnect from its parent and promptly form an upstream connection with the router thereby becoming the new root node of the network. The previous root node will disconnect from the router **whilst maintaining all of its downstream connections** and enter the idle state. The previous root node will then begin scanning for potential parent nodes and selecting a preferred parent.

The following diagram illustrates an example of a root node switch.

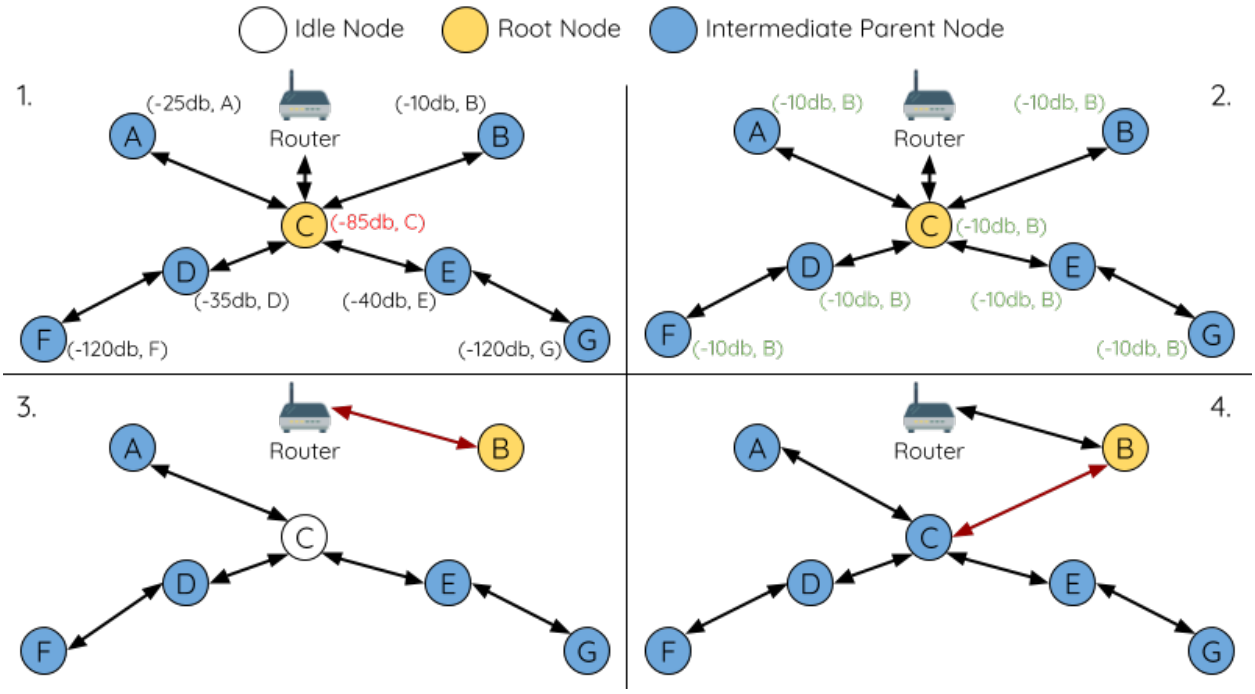

图 56: Root Node Switch Example

1. Node C is the current root node but has degraded signal strength with the router (-85db). The node C triggers a new election and all nodes begin transmitting and scanning for beacon frames **whilst still being connected**.

2. After multiple rounds of transmission and scanning, node B is elected as the new root node. Node B sends node C a **switch request** and node C responds with an acknowledgment.

3. Node B disconnects from its parent and connects with the router becoming the networks new root node. Node C disconnects from the router, enters the idle state, and begins scanning for and selecting a new preferred parent node. **Node C maintains all its downstream connections throughout this process**.

4. Node C selects node B as its preferred parent node, forms an upstream connection, and becomes a second layer node. The network layout is similar after the switch as node C still maintains the same subnetwork. However each node in node C' s subnetwork has been placed one layer deeper as a result of the switch. *Parent Node Switching* may adjust the network layout afterwards if any nodes have a new preferred parent node as a result of the root node switch.

注解: Root node switching must require an election hence is only supported when using a self-organized ESP-MESH network. In other words, root node switching cannot occur if a designated root node is used.

Parent Node Switching

Parent Node Switching entails a child node switching its upstream connection to another parent node of a shallower layer. **Parent Node Switching occurs autonomously** meaning that a child node will change its upstream connection automatically if a potential parent node of a shallower layer becomes available (i.e. due to a *Asynchronous Power-on Reset*).

All potential parent nodes periodically transmit beacon frames (see *Beacon Frames & RSSI Thresholding*) allowing for a child node to scan for the availability of a shallower parent node. Due to parent node switching, a self-organized ESP-MESH network can dynamically adjust its network layout to ensure each connection has a good RSSI and that the number of layers in the network is minimized.

5.24.6 Data Transmission

ESP-MESH Packet

ESP-MESH network data transmissions use ESP-MESH packets. ESP-MESH packets are **entirely contained within the frame body of a Wi-Fi data frame**. A multi-hop data transmission in an ESP-MESH network will involve a single ESP-MESH packet being carried over each wireless hop by a different Wi-Fi data frame.

The following diagram shows the structure of an ESP-MESH packet and its relation with a Wi-Fi data frame.

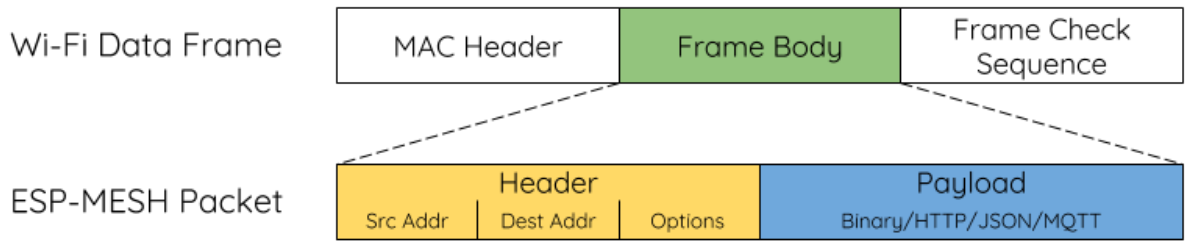

图 57: ESP-MESH Packet

The header of an ESP-MESH packet contains the MAC addresses of the source and destination nodes. The options field contains information pertaining to the special types of ESP-MESH packets such as a group transmission or a packet originating from the external IP network (see `MESH_OPT_SEND_GROUP` and `MESH_OPT_RECV_DS_ADDR`).

The payload of an ESP-MESH packet contains the actual application data. This data can be raw binary data, or encoded under an application layer protocol such as HTTP, MQTT, and JSON (see `mesh_proto_t`).

注解: When sending an ESP-MESH packet to the external IP network, the destination address field of the header will contain the IP address and port of the target server rather than the MAC address of a node (see

mesh_addr_t). Furthermore the root node will handle the formation of the outgoing TCP/IP packet.

Group Control & Multicasting

Multicasting is a feature that allows a single ESP-MESH packet to be transmitted simultaneously to multiple nodes within the network. Multicasting in ESP-MESH can be achieved by either specifying a list of target nodes, or specifying a preconfigured group of nodes. Both methods of multicasting are called via *esp_mesh_send()*.

To multicast by specifying a list of target nodes, users must first set the ESP-MESH packet's destination address to the **Multicast-Group Address** (`01:00:5E:xx:xx:xx`). This signifies that the ESP-MESH packet is a multicast packet with a group of addresses, and that the address should be obtained from the header options. Users must then list the MAC addresses of the target nodes as options (see *mesh_opt_t* and *MESH_OPT_SEND_GROUP*). This method of multicasting requires no prior setup but can incur a large amount of overhead data as each target node's MAC address must be listed in the options field of the header.

Multicasting by group allows a ESP-MESH packet to be transmitted to a preconfigured group of nodes. Each grouping is identified by a unique ID, and a node can be placed into a group via *esp_mesh_set_group_id()*. Multicasting to a group involves setting the destination address of the ESP-MESH packet to the target group ID. Furthermore, the *MESH_DATA_GROUP* flag must set. Using groups to multicast incurs less overhead, but requires nodes to previously added into groups.

注解: During a multicast, all nodes within the network still receive the ESP-MESH packet on the MAC layer. However, nodes not included in the MAC address list or the target group will simply filter out the packet.

Broadcasting

Broadcasting is a feature that allows a single ESP-MESH packet to be transmitted simultaneously to all nodes within the network. Each node essentially forwards a broadcast packet to all of its upstream and downstream connections such that the packet propagates throughout the network as quickly as possible. However, ESP-MESH utilizes the following methods to avoid wasting bandwidth during a broadcast.

1. When an intermediate parent node receives a broadcast packet from its parent, it will forward the packet to each of its child nodes whilst storing a copy of the packet for itself.

2. When an intermediate parent node is the source node of the broadcast, it will transmit the broadcast packet upstream to is parent node and downstream to each of its child nodes.

3. When an intermediate parent node receives a broadcast packet from one of its child nodes, it will forward the packet to its parent node and each of its remaining child nodes whilst storing a copy of the packet for itself.

4. When a leaf node is the source node of a broadcast, it will directly transmit the packet to its parent node.

5. When the root node is the source node of a broadcast, the root node will transmit the packet to all of its child nodes.

6. When the root node receives a broadcast packet from one of its child nodes, it will forward the packet to each of its remaining child nodes whilst storing a copy of the packet for itself.

7. When a node receives a broadcast packet with a source address matching its own MAC address, the node will discard the broadcast packet.

8. When an intermediate parent node receives a broadcast packet from its parent node which was originally transmitted from one of its child nodes, it will discard the broadcast packet

Upstream Flow Control

ESP-MESH relies on parent nodes to control the upstream data flow of their immediate child nodes. To prevent a parent node's message buffer from overflowing due to an overload of upstream transmissions, a parent node will allocate a quota for upstream transmissions known as a **receiving window** for each of its child nodes. **Each child node must apply for a receiving window before it is permitted to transmit upstream**. The size of a receiving window can be dynamically adjusted. An upstream transmission from a child node to the parent node consists of the following steps:

1. Before each transmission, the child node sends a window request to its parent node. The window request consists of a sequence number which corresponds to the child node's data packet that is pending transmission.

2. The parent node receives the window request and compares the sequence number with the sequence number of the previous packet sent by the child node. The comparison is used to calculate the size of the receiving window which is transmitted back to the child node.

3. The child node transmits the data packet in accordance with the window size specified by the parent node. If the child node depletes its receiving window, it must obtain another receiving windows by sending a request before it is permitted to continue transmitting.

注解: ESP-MESH does not support any downstream flow control.

警告: Due to *Parent Node Switching*, packet loss may occur during upstream transmissions.

Due to the fact that the root node acts as the sole interface to an external IP network, it is critical that downstream nodes are aware of the root node's connection status with the external IP network. Failing to do so can lead to nodes attempting to pass data upstream to the root node whilst it is disconnected from the IP network. This results in unnecessary transmissions and packet loss. ESP-MESH address this issue by

providing a mechanism to stabilize the throughput of outgoing data based on the connection status between the root node and the external IP network. The root node can broadcast its external IP network connection status to all other nodes by calling *esp_mesh_post_toDS_state()*.

Bi-Directional Data Stream

The following diagram illustrates the various network layers involved in an ESP-MESH Bidirectional Data Stream.

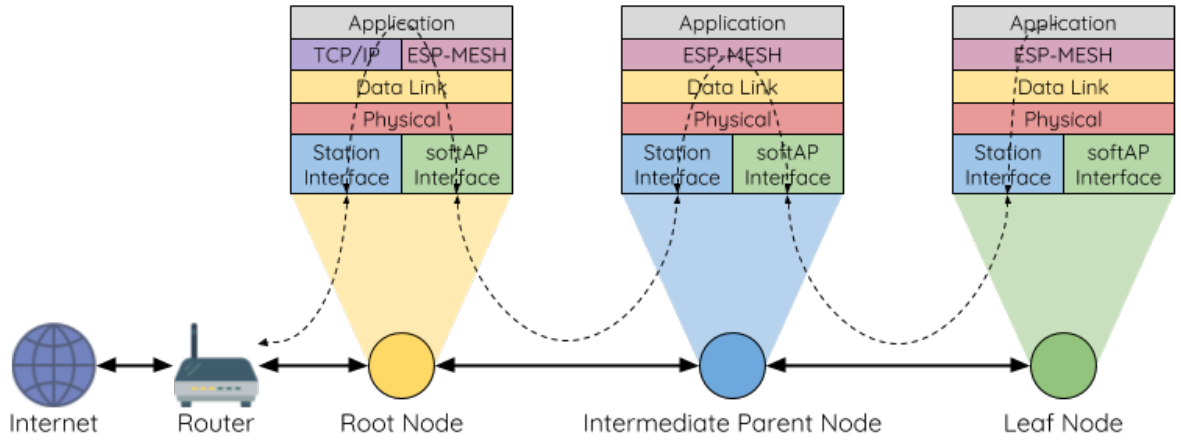

图 58: ESP-MESH Bidirectional Data Stream

Due to the use of *Routing Tables*, **ESP-MESH is able to handle pack forwarding entirely on the mesh layer**. A TCP/IP layer is only required on the root node when it transmits/receives a packet to/from an external IP network.

5.24.7 Channel Switching

Background

In traditional Wi-Fi networks, **channels** are predetermined frequency ranges. In an infrastructure basic service set (BSS), the serving AP and its connected stations must be on the same operating channels (1 to 14) in which beacons are transmitted. Physically adjacent BSS (Basic Service Sets) operating on the same channel can lead to interference and degraded performance.

In order to allow a BSS adapt to changing physical layer conditions and maintain performance, Wi-Fi contains mechanisms for **network channel switching**. A network channel switch is an attempt to move a BSS to a new operating channel whilst minimizing disruption to the BSS during this process. However it should be recognized that a channel switch may be unsuccessful in moving all stations to the new operating channel.

In an infrastructure Wi-Fi network, network channel switches are triggered by the AP with the aim of having the AP and all connected stations synchronously switch to a new channel. Network channel switching is implemented by embedding a **Channel Switch Announcement (CSA)** element within the AP' s periodically transmitted beacon frames. The CSA element is used to advertise to all connected stations regarding an upcoming network channel switch and will be included in multiple beacon frames up until the switch occurs.

A CSA element contains information regarding the **New Channel Number** and a **Channel Switch Count** which indicates the number of beacon frame intervals (TBTTs) remaining until the network channel switch occurs. Therefore, the Channel Switch Count is decremented every beacon frame and allows connected stations to synchronize their channel switch with the AP.

ESP-MESH Network Channel Switching

ESP-MESH Network Channel Switching also utilize beacon frames that contain a CSA element. However, being a multi-hop network makes the switching process in ESP-MESH is more complex due to the fact that a beacon frame might not be able to reach all nodes within the network (i.e. in a single hop). Therefore, an ESP-MESH network relies on nodes to forward the CSA element so that it is propagated throughout the network.

When an intermediate parent node with one or more child nodes receives a beacon frame containing a CSA, the node will forward the CSA element by including the element in its next transmitted beacon frame (i.e. with the same **New Channel Number** and **Channel Switch Count**). Given that all nodes within an ESP-MESH network receive the same CSA, the nodes can synchronize their channel switches using the Channel Switch Count, albeit with a short delay due to CSA element forwarding.

An ESP-MESH network channel switch can be triggered by either the router or the root node.

Root Node Triggered

A root node triggered channel switch can only occur when the ESP-MESH network is not connected to a router. By calling *esp_mesh_switch_channel()*, the root node will set an initial Channel Switch Count value and begin including a CSA element in its beacon frames. Each CSA element is then received by second layer nodes, and forwarded downstream in the their own beacon frames.

Router Triggered

When an ESP-MESH network is connected to a router, the entire network must use the same channel as the router. Therefore, **the root node will not be permitted to trigger a channel switch when it is connected to a router**.

When the root node receives beacon frame containing a CSA element from the router, **the root node will set Channel Switch Count value in the CSA element to a custom value before forwarding it**

downstream via beacon frames. It will also decrement the Channel Switch Count of subsequent CSA elements relative to the custom value. This custom value can be based on factors such as the number of network layers, the current number of nodes etc.

The setting the Channel Switch Count value to a custom value is due to the fact that the ESP-MESH network and its router may have a different and varying beacon intervals. Therefore, the Channel Switch Count value provided by the router is irrelevant to an ESP-MESH network. By using a custom value, nodes within the ESP-MESH network are able to switch channels synchronously relative to the ESP-MESH network' s beacon interval. However, this will also result in the ESP-MESH network' s channel switch being unsynchronized with the channel switch of the router and its connected stations.

Impact of Network Channel Switching

- **Due to the ESP-MESH network channel switch being unsynchronized with the router' s channel switc**
  - The ESP-MESH network' s channel switch time is dependent on the ESP-MESH network' s beacon interval and the root node' s custom Channel Switch Count value.
  - The channel discrepancy prevents any data exchange between the root node and the router during that ESP-MESH network' s switch.
  - In the ESP-MESH network, the root node and intermediate parent nodes will request their connected child nodes to stop transmissions until the channel switch takes place by setting the **Channel Switch Mode** field in the CSA element to 1.
  - Frequent router triggered network channel switches can degrade the ESP-MESH network' s performance. Note that this can be caused by the ESP-MESH network itself (e.g. due to wireless medium contention with ESP-MESH network). If this is the case, users should disable the automatic channel switching on the router and use a specified channel instead.
- **When there is a temporary channel discrepancy, the root node remains technically connected to the r**
  - Disconnection occurs after the root node fails to receive any beacon frames or probe responses from the router over a fixed number of router beacon intervals.
  - Upon disconnection, the root node will automatically re-scan all channels for the presence of a router.
- **If the root node is unable to receive any of the router' s CSA beacon frames (e.g. due to short switch**
  - After the router switches channels, the root node will no longer be able to receive the router' s beacon frames and probe responses and result in a disconnection after a fixed number of beacon intervals.
  - The root node will re-scan all channels for the router after disconnection.

– The root node will maintain downstream connections throughout this process.

注解: Although ESP-MESH network channel switching aims to move all nodes within the network to a new operating channel, it should be recognized that a channel switch might not successfully move all nodes (e.g. due to reasons such as node failures).

Channel and Router Switching Configuration

ESP-MESH allows for autonomous channel switching to be enabled/disabled via configuration. Likewise, autonomous router switching (i.e. when a root node autonomously connects to another router) can also be enabled/disabled by configuration. Autonomous channel switching and router switching is dependent on the following configuration parameters and run-time conditions.

Allow Channel Switch: This parameter is set via the `allow_channel_switch` field of the *`mesh_cfg_t`* structure and permits an ESP-MESH network to dynamically switch channels when set.

Preset Channel: An ESP-MESH network can have a preset channel by setting the `channel` field of the *`mesh_cfg_t`* structure to the desired channel number. If this field is unset, the `allow_channel_switch` parameter is overridden such that channel switches are always permitted.

Allow Router Switch: This parameter is set via the `allow_router_switch` field of the *`mesh_router_t`* and permits an ESP-MESH to dynamically switch to a different router when set.

Preset Router BSSID: An ESP-MESH network can have a preset router by setting the `bssid` field of the *`mesh_router_t`* structure to the BSSID of the desired router. If this field is unset, the `allow_router_switch` parameter is overridden such that router switches are always permitted.

Root Node Present: The presence of a root node will can also affect whether or a channel or router switch is permitted.

The following table illustrates how the different combinations of parameters/conditions affect whether channel switching and/or router switching is permitted. Note that *X* represents a "don't care" for the parameter.

Configuration and Conditions					Result
Preset Channel	Allow Channel Switch	Preset Router BSSID	Allow Router Switch	Root Node Present	Permitted Switches
N	X	N	X	X	Channel & Router
		Y	N		Channel Only
		Y	Y		Channel & Router
Y	Y	N	X	X	Channel & Router
	N			N	Router Only
	N			Y	Channel & Router
	Y	Y	N	X	Channel Only
	N			N	None
	N			Y	Channel Only
	Y		Y	X	Channel & Router
	N			N	Router Only
	N			Y	Channel & Router

5.24.8 Performance

The performance of an ESP-MESH network can be evaluated based on multiple metrics such as the following:

Network Building Time: The amount of time taken to build an ESP-MESH network from scratch.

Healing Time: The amount of time taken for the network to detect a node break down and carry out appropriate actions to heal the network (such as generating a new root node or forming new connections).

Per-hop latency: The latency of data transmission over one wireless hop. In other words, the time taken to transmit a data packet from a parent node to a child node or vice versa.

Network Node Capacity: The total number of nodes the ESP-MESH network can simultaneously support. This number is determined by the maximum number of downstream connections a node can accept and the maximum number of layers permissible in the network.

The following table lists the common performance figures of an ESP-MESH network. However users should note that performance numbers can vary greatly between installations based on network configuration and operating environment.

Function	Description
Networking Building Time	< 60 seconds
Healing time	Root Node Break Down: < 10 seconds Child Node Break Down: < 5 seconds
Per-hop latency	10 to 30 milliseconds

注解: The following test conditions were used to generate the performance figures above.

- Number of test devices: **100**
- Maximum Downstream Connections to Accept: **6**
- Maximum Permissible Layers: **6**

注解: Throughput depends on packet error rate and hop count.

注解: The throughput of root node’s access to the external IP network is directly affected by the number of nodes in the ESP-MESH network and the bandwidth of the router.

5.24.9 Further Notes

- Data transmission uses Wi-Fi WPA2-PSK encryption
- Mesh networking IE uses AES encryption

Router and internet icon made by Smashicons from www.flaticon.com

5.25 ESP-BLE-MESH

[English]

5.25.1 概述

蓝牙 mesh 网络实现了无线设备的“多对多”通讯，其可用于建立包含大量设备的网络。

设备能将数据中继至不在初始设备无线电覆盖范围内的其他设备。这样，mesh 网络就能够覆盖非常大的物理区域，并且囊括大量设备。Mesh 网络非常适用于楼宇自动化、传感器网络和其他物联网解决方案，这些情景下数以十计、百计、千计的设备需要与其他设备进行安全可靠的通信。

蓝牙 mesh 并非无线通信技术，而是一种网络技术。该技术基于一种无线通讯协议栈，即低功耗蓝牙。

ESP-BLE-MESH 基于 Zephyr 蓝牙 Mesh 协议栈的顶端，其实现支持设备配网和节点控制，同时也实现了代理、中继、低功耗和朋友等节点功能。

有关 ESP-BLE-MESH 架构实现的信息，请参见*ESP-BLE-MESH 架构*；有关各自 API 的信息，请参见*ESP-BLE-MESH API Reference*。

ESP-BLE-MESH 的实现和认证基于最新的 Mesh Profile v1.0.1 。有关 ESP-BLE-MESH 认证的细节，请参考 此处 。

注解： 如果您在寻找 ESP32 基于 Wi-Fi 的 mesh 方案，请查阅乐鑫的另一款产品 ESP-MESH。更多相关信息及文档，请参见:doc:*ESP-MESH <../../api-reference/network/esp_mesh>*。

5.25.2 ESP-BLE-MESH 快速入门

该章节旨在帮助您基于乐鑫的 ESP32 开发板搭建 ESP-BLE-MESH 网络。

我们将会展示如何搭建并运行一个包含 3 个节点的小型 ESP-BLE-MESH 网络，其中包含设备配网、节点配置，以及向特定节点上的 Generic OnOff Server Model 发送开关灯命令。

如果您是第一次接触 ESP-IDF，请参见 esp-idf :doc:../../get-started/index 来设置开发环境，编译、烧写和运行示例应用程序。

硬件及软件准备

硬件：

- 3 块 ESP32 开发板，请参见*options*。
- 连接开发板的 USB 线。
- ESP-IDF 开发环境。
- 运行 Android 或 iOS 的手机或平板。

软件：

- 下载至 ESP32 开发板的示例应用 bluetooth/esp_ble_mesh/ble_mesh_node。
- 手机 App: **nRF Mesh** Android 或 iOS 版本。除 nRF Mesh 的 App，以下 App 也支持 ESP-BLE-MESH：
  - EspBleMesh Android App
  - Silicon Labs Android 或 iOS App

安装

以下详细步骤可指导您完成安装过程。

步骤 1. 检查硬件

ESP32-DevKitC 和 ESP-WROVER-KIT 开发板均支持 ESP-BLE-MESH。您可以通过 menuconfig: `idf.py menuconfig` > `Example Configuration` > `Board selection for ESP-BLE-MESH` 选择特定的开发板。

注解: 如果您打算使用 ESP32-DevKitC 开发板，请将 RGB 灯焊接至 GPIO 管脚 25、26 和 27。

步骤 2. 配置软件

进入 bluetooth/esp_ble_mesh/ble_mesh_node 示例文件夹，运行 `idf.py menuconfig` 选择所使用的开发板，然后运行 `idf.py build` 编译示例。

步骤 3. 下载应用

> bluetooth/esp_ble_mesh/ble_mesh_node 示例编译成功后，用户可以运行 `idf.py flash` 将编译生成的二进制文件下载至 3 块开发板中。

当开发板上电后，RGB 灯会变为 **绿色**。

步骤 4. 设备配网

在该章节中，我们将使用 **nRF Mesh Android** App 演示如何配网设备。用户也可以从 App Store 下载其 iOS 版本。

4.1 扫描 (scanner)

扫描 (Scanner) 是 nRF Mesh App 搜索蓝牙通信范围内未配网设备的功能。打开 App，点击底部的扫描按钮 **Scanner**。App 就会开始扫描设备，很快，我们便可在屏幕上看到 3 个未配网设备。

4.2 识别

用户可以选择任何一个未配网设备，此时 App 会尝试和该设备建立连接。连接成功（有时可能需要尝试多次），且发现相应的 ESP-BLE-MESH GATT 服务后，用户可以在屏幕中看到识别按钮 **IDENTIFY**。IDENTIFY 操作告诉用户哪个设备将被配网。

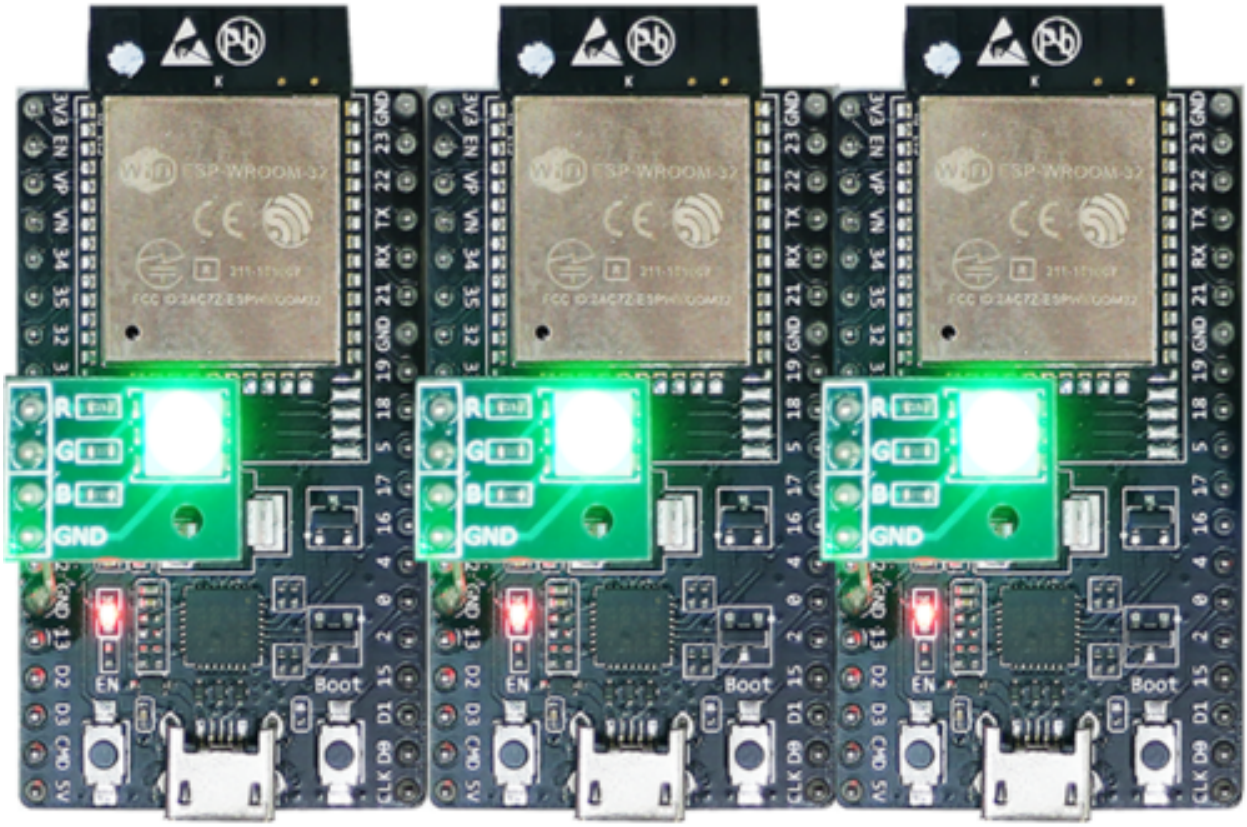

图 59: ESP-BLE-MESH 设备上电

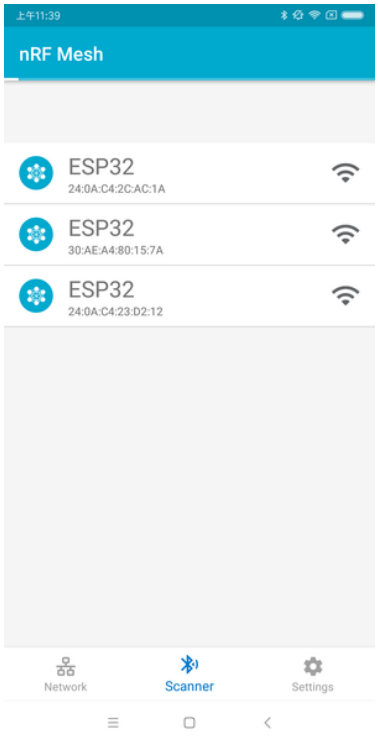

图 60: nRF Mesh - 扫描

注解: IDENTIFY 需要设备侧的支持，然后才能用来识别当前正在配网的设备。当前如果点击识别按钮 **IDENTIFY**，除了串口输出的 log，在当前的 example 中设备侧不会有其他现象。

点击识别按钮 **IDENTIFY** 后，用户可以看到配网按钮 **PROVISION**。

4.3 配网

点击配网按钮 **PROVISION**，App 会开始配网设备。当设备配网成功后，开发板上的 RGB 灯会熄灭，此时 App 会执行以下几个步骤：

1. 和该节点（设备配网后成为节点）断开连接
2. 尝试和该节点重新建立连接
3. 连接成功并且发现了相应的 ESP-BLE-MESH GATT 服务
4. 获取节点的 Composition Data 并且给该节点添加 AppKey

当以上所有的步骤完成后，节点初始配置完成. 此时点击 **OK**，用户可以看见节点的单播地址分配成功，并且其 Composition Data 也被成功解析.

有时在上述步骤 2 中，App 可能与节点连接失败。这种情况下，用户点击 **OK** 后可以看到，节点只有单播地址被成功分配，Composition data 并没有被成功获取。此时用户需要点击右上角的连接按钮 **CONNECT**，

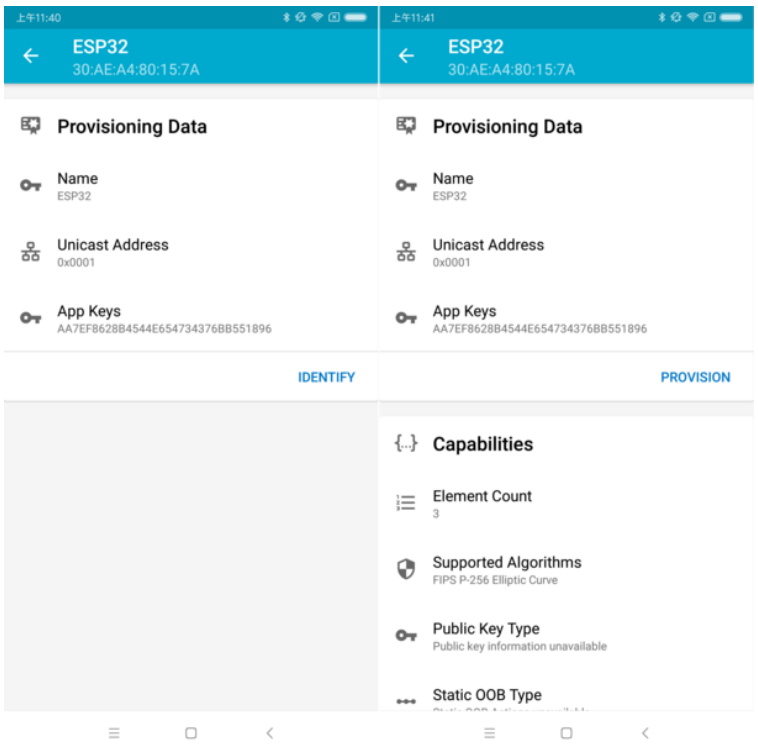

图 61: nRF Mesh - 识别 - 配网

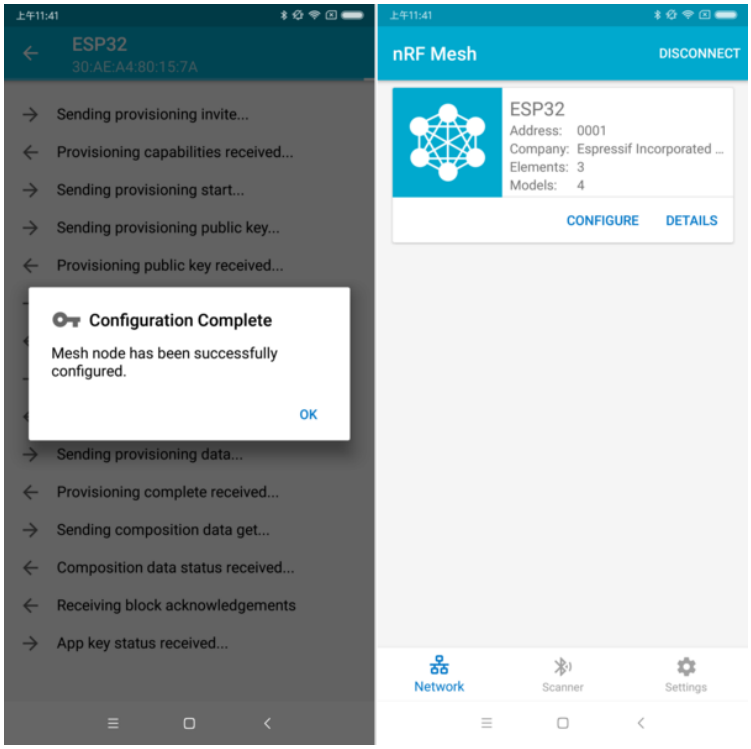

图 62: nRF Mesh - 配置完成

屏幕上会显示原先配网的节点，用户需要选择该节点并与其建立连接。

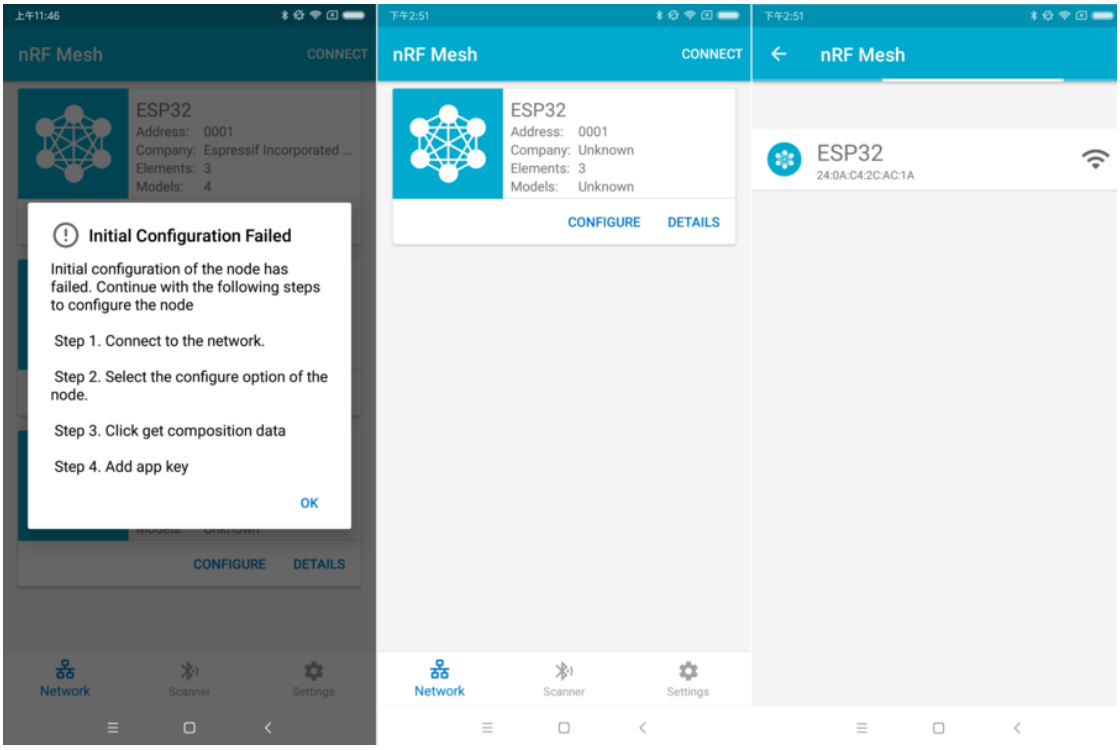

图 63: nRF Mesh - 初始配置失败

连接成功后，App 会显示获取 Composition Data 以及添加 AppKey 的按钮。

如果该设备是 App 配网的第二个或第三个节点，此时点击连接按钮 **CONNECT** 后，用户可以在屏幕中看到 2 个或 3 个节点。这种情况下，用户可以选择其中的任何一个节点建立连接，连接成功后可以返回至主界面选择需要配置的节点。

这里给出了一个 3 个节点的示例。

- 左侧图片表示第三个设备成功配网，但是 App 没有和其成功建立连接。当 App 尝试去重新连接第三个节点时，界面上会出现 3 个节点。
- 右侧图片表示和节点成功建立连接后，App 显示这 3 个节点的信息。用户可以看到 App 已经获取了第一个和第二个节点的 Composition Data，但是对于第三个节点，只有单播地址被成功分配而节点的 Composition Data 未知。

4.4 配置

当成功配网和初始配置完成后，用户可以配置节点的其余信息，例如将 AppKey 绑定至每个元素 (element) 的每个模型 (model) 中、设置模型的发布信息等。

下图展示了如何将 AppKey 绑定至 Primary Element 中的 Generic OnOff Server Model 上。

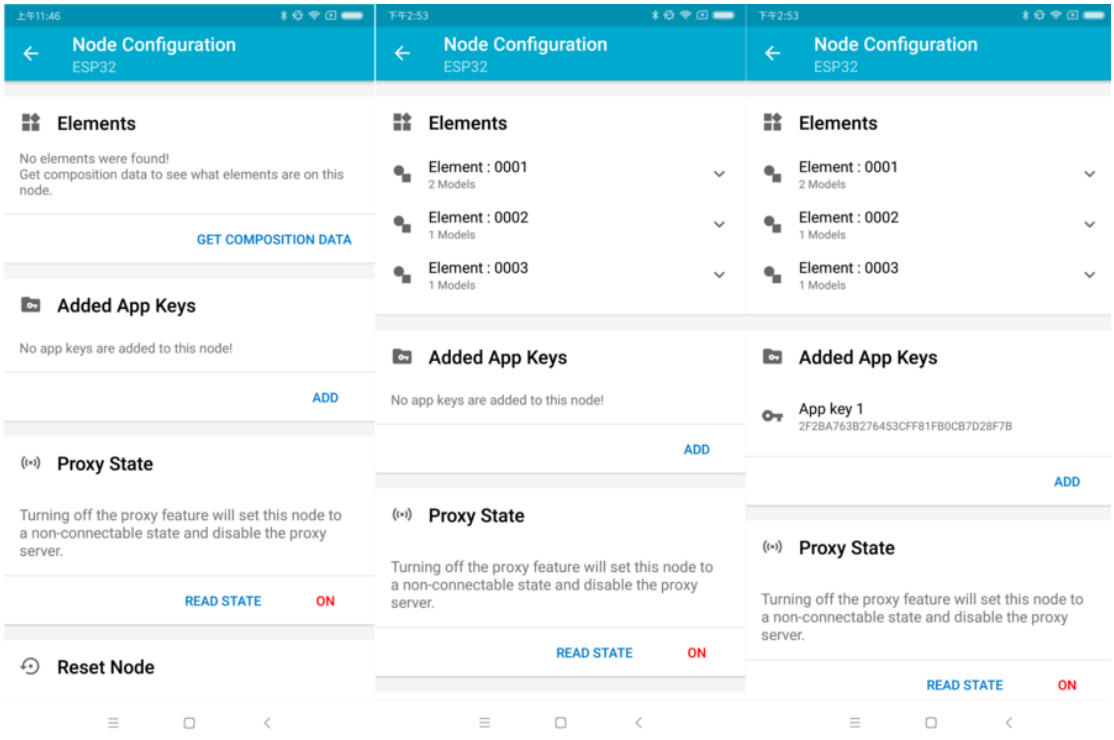

图 64: nRF Mesh - 重连 - 初始配置

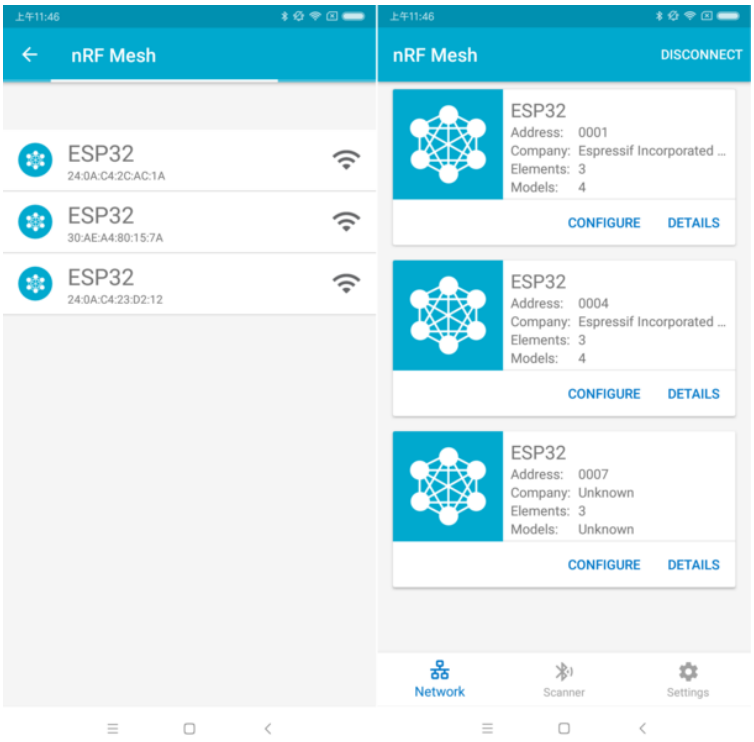

图 65: nRF Mesh - 重连 - 3 个节点

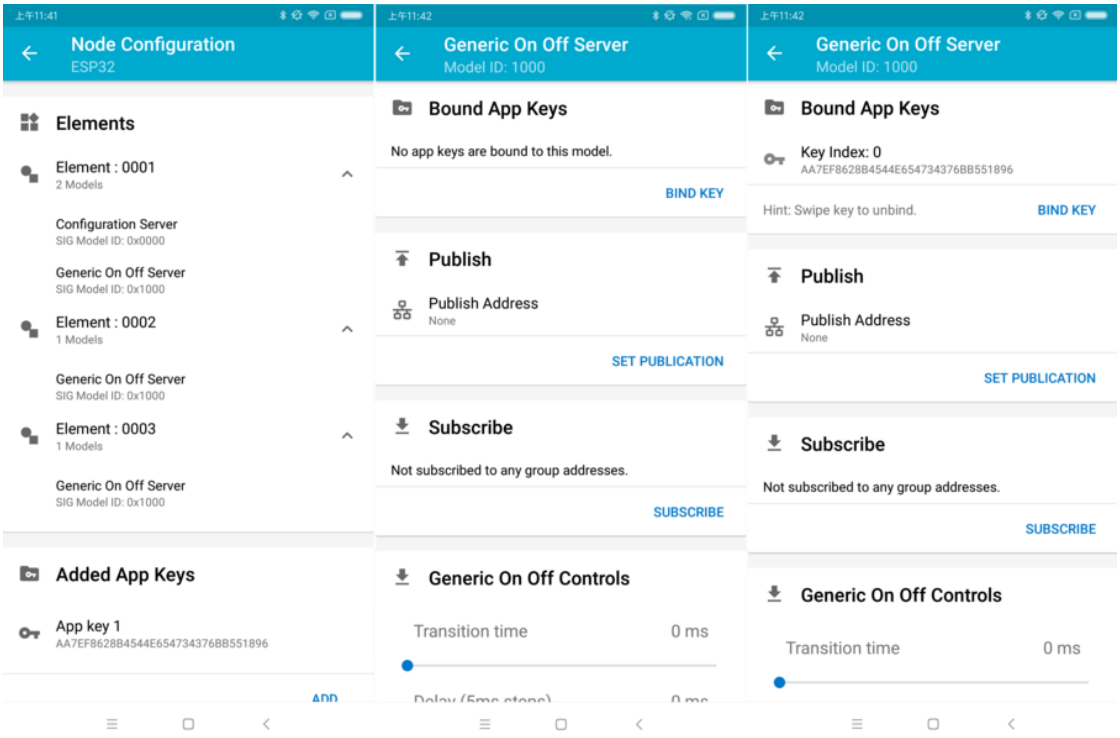

图 66: nRF Mesh - Model Bind AppKey

注解: 用户不需要将 AppKey 绑定至 Configuration Server Model，因为该模型使用 DevKey 在 Upper Transport Layer 中对消息进行加密。

Step 5. 运行网络

当 3 个元素中的 Generic OnOff Server Models 均成功绑定 AppKey 后，用户可以使用 App 开关 RBG 灯。

在 bluetooth/esp_ble_mesh/ble_mesh_node 示例中，第一个 Generic OnOff Server Model 用来控制 **红色**，第二个用来控制 **绿色**，同时第三个用来控制 **蓝色**.

下图展示了打开了不同色灯的开发板。

注解: 对于 **nRF Mesh** iOS App [version 1.0.4]，当节点包含超过一个元素时，App 表现不正确。如果用户尝试打开或者关闭第 2 个或第 3 个 Generic OnOff Server Model，App 会将相应的消息发送至第 1 个 Generic OnOff Server Model。

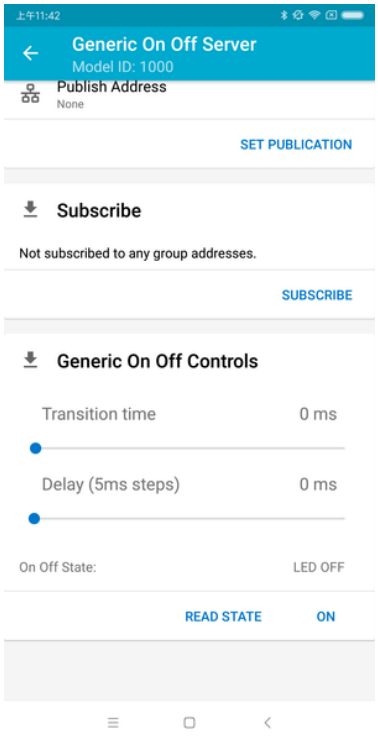

图 67: nRF Mesh - 通用开关控制

5.25.3 ESP-BLE-MESH 示例

- ESP-BLE-MESH 节点 - 展示了将 ESP-BLE-MESH 作为拥有 Configuration Server model 和 Generic OnOff Server model 的节点设备的用法。然后，ESP-BLE-MESH Provisioner 可以配网设备，控制表示开/关状态的 RGB 灯，示例请见 example code 。
- ESP-BLE-MESH 客户端模型 - 展示了 Generic OnOff Client model 如何在节点内工作。节点拥有 Configuration Server model、Generic OnOff Server model 和 Generic OnOff Client model，示例请见: example code 。
- ESP-BLE-MESH Provisioner - 展示了设备如何充当 ESP-BLE-MESH Provisioner 以配网设备。Provisioner 拥有 Configuration Server model、Configuration Client model 和 Generic OnOff Client model，示例请见 example code 。
- ESP-BLE-MESH 快速配网 - Client 和:example_file‘Server <bluetooth/esp_ble_mesh/ble_mesh_fast_provision/fast_ - 该示例用于演示快速配网。配网 100 个设备费时不超过 60 秒，示例请见: example client code 和 example server code 。
- Wi-Fi 和 ESP-BLE-MESH 共存 - 该示例用于演示 Wi-Fi 和 ESP-BLE-MESH 共存的功能。简而言之，用户可在运行 ESP-BLE-MESH 时使用 Wi-Fi，示例请见 example code 。
- ESP-BLE-MESH 节点控制台 - 该演示实现 ESP-BLE-MESH 节点的基本功能。在演示中，Provisioner 可以扫描、验证节点，节点可以回复 Provisioner 的获取/设置消息，示例请见: example node code 和 example provisioner code 。

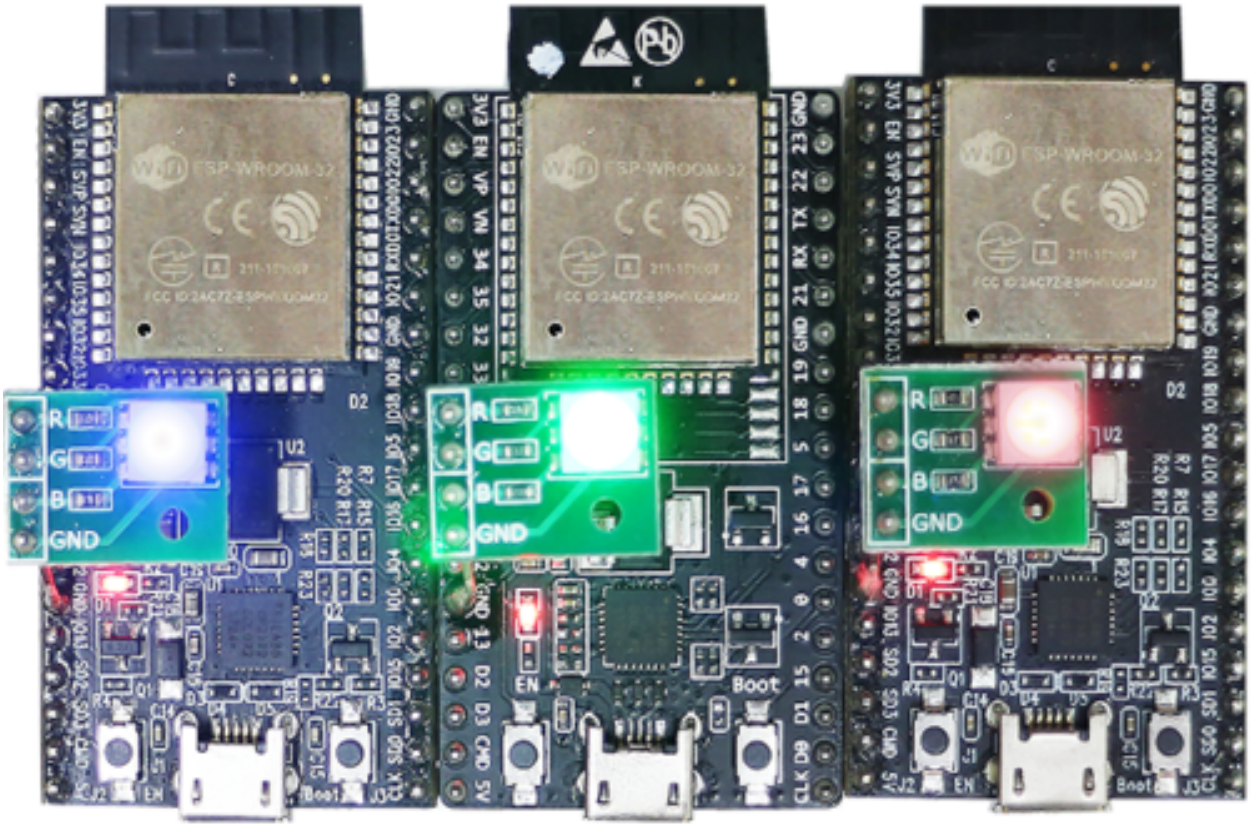

图 68: 3 个上电的 ESP-BLE-MESH 节点

5.25.4 ESP-BLE-MESH 演示视频

- Provisioning of ESP-BLE-MESH nodes using Smartphone App
- Espressif Fast Provisioning using ESP-BLE-MESH App
- Espressif ESP-BLE-MESH and Wi-Fi Coexistence

5.25.5 ESP-BLE-MESH 常见问题手册

- *1. Provisioner 开发*
- *2. 节点开发*
- *3. ESP-BLE-MESH 和 Wi-Fi 共存*
- *4. 快速配网*
- *5. Log 帮助*
- *6. 示例帮助*
- *7. 其他*

5.25.6 相关文档

ESP-BLE-MESH Feature List

Supported Features

Mesh Core

- **Provisioning: Node Role**
  - PB-ADV and PB-GATT
  - OOB Authentication
- **Provisioning: Provisioner Role**
  - PB-ADV and PB-GATT
  - OOB Authentication
- **Networking**
  - Relay
  - Segmentation and Reassembly
  - Key Refresh Procedure

  - IV Update Procedure
  - Friend
  - Low Power
  - Proxy Server
  - Proxy Client

- **Multiple Client Models Run Simultaneously**
  - Support multiple client models send packets to different nodes simultaneously
  - No blocking between client model and server model

- **NVS Storing**
  - Store provisioning and configuration information of ESP-BLE-MESH Node

Mesh Models

- **Foundation models**
  - Configuration Server model
  - Configuration Client model
  - Health Server model
  - Health Client model

- **Generic client models**
  - Generic OnOff Client
  - Generic Level Client
  - Generic Default Transition Time Client
  - Generic Power OnOff Client
  - Generic Power Level Client
  - Generic Battery Client
  - Generic Location Client
  - Generic Property Client

- **Sensor client models**
  - Sensor Client

- **Time and Scenes client models**
  - Time Client

  - Scene Client
  - Scheduler Client
- **Lighting client models**
  - Light Lightness Client
  - Light CTL Client
  - Light HSL Client
  - Light xyL Client
  - Light LC Client
- **Generic server models**
  - Generic OnOff Server
  - Generic Level Server
  - Generic Default Transition Time Server
  - Generic Power OnOff Server
  - Generic Power OnOff Setup Server
  - Generic Power Level Server
  - Generic Power Level Setup Server
  - Generic Battery Server
  - Generic Location Server
  - Generic Location Setup Server
  - Generic User Property Server
  - Generic Admin Property Server
  - Generic Manufacturer Property Server
  - Generic Client Property Server
- **Sensor server models**
  - Sensor Server
  - Sensor Setup Server
- **Time and Scenes server models**
  - Time Server
  - Time Setup Server
  - Scene Server

  - Scene Setup Server
  - Scheduler Server
  - Scheduler Setup Server
- **Lighting server models**
  - Light Lightness Server
  - Light Lightness Setup Server
  - Light CTL Server
  - Light CTL Temperature Server
  - Light CTL Setup Server
  - Light HSL Server
  - Light HSL Hue Server
  - Light HSL Saturation Server
  - Light HSL Setup Server
  - Light xyL Server
  - Light xyL Setup Server
  - Light LC Server
  - Light LC Setup Server

Mesh Applications

- **ESP-BLE-MESH Node**
  - Tutorial
  - Tutorial
  - Example
- **ESP-BLE-MESH Provisioner**
  - Tutorial
  - Example
- **ESP-BLE-MESH Fast Provisioning**
  - Fast Provisioning Client Model Tutorial
  - Fast Provisioning Server Model Tutorial
  - Example

  - Demo Video

- **ESP-BLE-MESH and Wi-Fi Coexistence**
  - Tutorial
  - Example
  - Demo Video
- **ESP-BLE-MESH Console Commands**
  - Example

Future Release Features

Mesh Core

- Provisioner NVS Storage

Mesh Applications

- Fast OTA
- Friendship

ESP-BLE-MESH 架构

[English]

本文档将介绍 ESP-BLE-MESH 的架构概览、架构实现和辅助程序。

- ESP-BLE-MESH 架构概览
  - 描述了 ESP-BLE-MESH 架构的 5 大部分及每个部分的功能。
- ESP-BLE-MESH 架构实现
  - 描述了 ESP-BLE-MESH 文件的基本功能、文件与 ESP-BLE-MESH 架构的对应关系及文件间调用的接口。
- ESP-BLE-MESH 辅助程序
  - 描述了 ESP-BLE-MESH 的辅助程序，比如 Mesh 网络管理，Mesh 特性等。

1. ESP-BLE-MESH 架构概览

目前，ESP-BLE-MESH 已经实现了 Mesh Profile 的大多数功能及 Mesh Model 规范中定义的所有 Client Model。未支持的功能/模型尚在开发中，会尽快提供。ESP-BLE-MESH 已通过 Bluetooth SIG 蓝牙技术联盟的 认证。

ESP-BLE-MESH 架构主要由以下 5 大部分组成：

- `Mesh` 协议栈
  - `Mesh Networking` 负责 BLE Mesh 设备的网络消息处理等。
  - `Mesh Provisioning` 负责 BLE Mesh 设备的启动配置流程。
  - `Mesh Models` 负责实现 SIG 定义的模型。
- 网络管理
  - 负责实现网络管理程序，包括节点删除程序、网络索引 (IV Index) 恢复程序等。
- 特性
  - 包括 BLE Mesh 特性，如低功耗特性、好友特性、中继特性等。
- `Mesh` 承载层
  - 包括 广播承载层和 `GATT` 承载层。承载层对于 ESP-BLE-MESH 协议栈至关重要，因为协议栈基于蓝牙低功耗技术构建而成，其必须利用承载层通过 BLE 广播通道和连接通道进行数据传输。
- 应用程序
  - 基于 ESP-BLE-MESH 协议栈和 `Mesh Models`。
  - 通过调用 API 和处理事件，`Applications` 实现了与 ESP-BLE-MESH 协议栈中的 `Mesh Networking` 和 `Mesh Provisioning` 的交互，也实现了与 `Mesh Models` 中一系列模型的交互。

1.1 Mesh 协议栈

1.1.1 Mesh Networking

协议栈架构中的 `Mesh Networking` 实现了如下功能：

- Mesh 网络中节点间的通讯。
- Mesh 网络中消息的加解密。
- Mesh 网络资源的管理，如网络秘钥 (NetKey)、网络索引等。
- Mesh 网络消息的分包与重组。
- 消息在不同模型间的模型映射。
- 更多功能，请参见*ESP-BLE-MESH Feature List*。

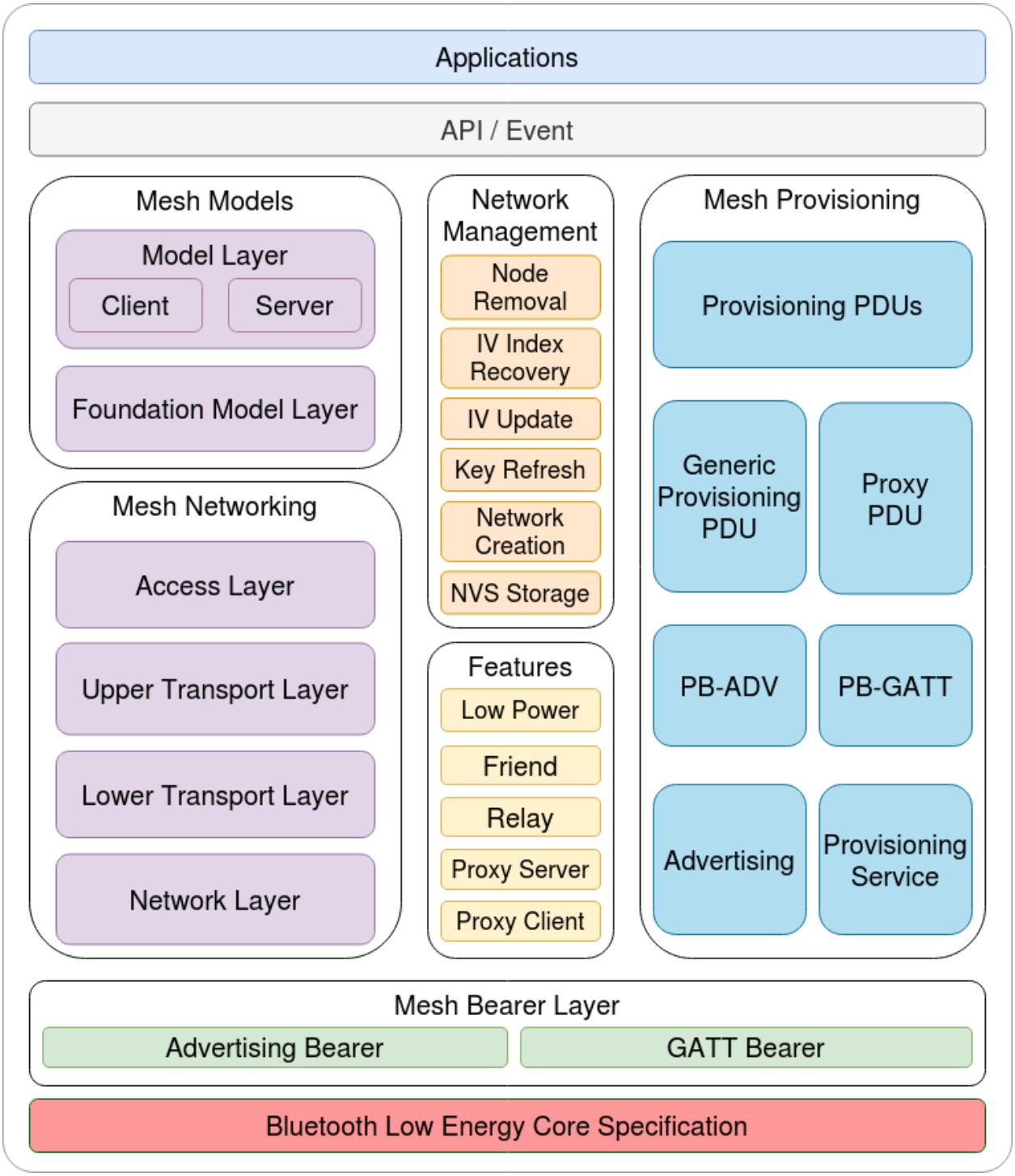

图 69: 图 1.1 ESP-BLE-MESH 架构图

`Mesh Networking` 功能的实现是基于层级结构的。每一层的功能如表 1.1 所示：

表 1: 表 1.1 Mesh Networking 框架描述

层级	功能
接入层	接入层定义应用程序数据的格式，还对上层传输层对数据包的加密和解密进行定义和控制。
上层传输层	上层传输层对接入层进出的应用数据进行加密、解密和认证，同时也处理被称为“传输控制消息”的特殊消息，这种消息包括了与“友谊”和心跳包相关的消息。
底层传输层	底层传输层处理 PDU 的分包和重组。
网络层	网络层定义网络消息的地址类型和格式，实现设备的中继功能。

1.1.2 Mesh Provisioning

协议栈架构中的 `Mesh Provisioning` 实现了如下功能：

- 对未配网设备的配网。
- Mesh 网络资源的分配 (单播地址、网络索引和网络秘钥)。
- 配网期间对 4 种验证方法的支持。
- 更多功能，请参见*ESP-BLE-MESH Feature List*。

`Mesh Provisioning` 功能的实现是基于层级结构的。每一层的功能如表 1.2 所示：

表 2: 表 1.2 Mesh Provisioning 框架描述

层级	功能
Provisioning PDUs	通过配网协议处理不同层级的 Provisioning PDUs。
Generic Provisioning PDU/Proxy PDU	使用 Generic Provisioning 层或代理协议层将 Provisioning PDU 传输到未配网的设备。
PB-ADV/PB-GATT	这些层级定义了 Provisioning PDUs 作为可分包和重组的消息进行传输的方式。
Advertising/Provisioning Service	Provisioning bearer 定义了会话建立的方式，该方式用来将 Generic Provisioning 层的传输包传送到设备。

1.1.3 Mesh Models

协议栈架构中的 `Mesh Models` 实现了如下功能：

- Configuration Client/Server Models
- Health Client/Server Models
- Generic Client/Server Models

- Sensor Client/Server Models
- Time and Scenes Client/Server Models
- Lighting Client/Server Models

每一层的功能如表 1.3 所示：

表 3: 表 1.3 Mesh Models 框架描述

层级	功能
模型层	模型层实现用于标准化典型用户场景操作的模型，包括 Generic Client/Server Models、Sensor Client/Server Models、Time and Scenes Client/Server Models、Lighting Client/Server Models 和若干自定义模型。
基础模型层	基础模型层实现与 ESP-BLE-MESH 网络配置、管理和自我诊断等相关的模型。

1.2 Mesh 网络管理

网络管理实现了如下功能：

- 节点移除程序：用于将节点从网络中移除。
- 网络索引恢复程序：用于恢复节点的网络索引。
- 网络索引更新程序：用于更新节点的网络索引。
- 秘钥更新程序：用于更新节点的网络秘钥、应用秘钥 (AppKey) 等。
- 网络创建程序：用于创建 mesh 网络。
- NVS 存储器：用于存储节点的网络信息。

1.3 Mesh 特性

特性包括以下几项：

- 低功耗特性：用于降低节点的能耗。
- 好友特性：用于为低功耗节点存储消息。
- 中继特性：用于中继/转发节点通过广播承载层收到的网络 PDU.
- Proxy Server/Client 是代理协议中的两个节点角色，其使节点可以通过面向连接的承载层收发 Network PDUs、mesh beacons、代理配置消息和 Provisioning PDU。

1.4 Mesh 承载层

协议栈框架中的 承载层负责 ESP-BLE-MESH 协议栈和低功耗蓝牙核心协议间的数据传输。

承载层可视为是基于蓝牙低功耗核心协议的载体层，其实现了 ESP-BLE-MESH 协议栈数据的接收和传输。

表 4: 表 1.3 Mesh 承载层描述

层级	功能
GATT 承载层	GATT 承载层使用代理协议通过 GATT 连接在两个设备之间发送和接收 `Proxy PDUs`。
广播承载层	使用广播承载层时，必须使用低功耗蓝牙广播通道来发送 mesh 数据包，数据包中的 AD Type 需要设置为 mesh 数据包的类型。

1.5 Mesh 应用层

协议栈框架图中的 *应用层*通过调用 ESP-BLE-MESH 协议栈提供的 API 并处理协议栈上报的事件来实现相应的功能，有一些常见应用，比如网关、照明等。

应用层和 `API / 事件`之间的交互

- 应用层调用 API
  - 调用配网相关的 API 进行配网。
  - 调用模型相关的 API 发送消息。
  - 调用设备属性相关的 API 获取设备的本地信息。
- 应用层处理事件

  应用层的设计基于事件设计，事件将参数传输给应用层。事件主要分为两大类。
  - **调用 API 完成的事件**。
    - 比如接收消息的节点。
  - **协议栈主动上报给应用层的事件**。
    - 协议栈主动上报的事件。
    - 模型主动上报的事件。
- 事件通过应用层注册的回调函数进行上报，同时回调函数中也会包含对事件的相应处理。

`API /事件`与 ESP-BLE-MESH 协议栈的交互

- 用户使用的 API 主要调用 ‘‘Mesh Networking‘‘、`Mesh Provisioning` 和 `Mesh Models` 提供的函数。
- `API /事件`和协议栈的交互不会跨越协议栈的层级进行操作。比如 API 不会调用 `Network Layer` 相关的函数。

2. ESP-BLE-MESH 架构实现

ESP-BLE-MESH 架构的设计和实现是基于层级和模块的。具体而言，第 2.1 节（Mesh 网络的实现），第 2.2 节（Mesh 配网实现）和第 2.3 节（Mesh 层级实现）基于层级思想，第 2.4 节（网格模型的实现）基于模块思想。

- **层级思想**: 基于层级思想，网络架构根据 Mesh Profile Specification 中指定的层级设计而成。每层都有独特的文件，文件包括该层的 API 等。具体设计如图 2.1 所示。
- **模块思想**: 每个文件实现一个独立的功能，供其它程序调用。

ESP-BLE-MESH 架构采用分层的方式进行设计，数据包的处理所经过的层级顺序是固定的，也就是数据包的处理过程会形成一个 消息流。因此，我们可以从图 2.1 的协议栈接口图中看到消息流。

2.1 Mesh 协议栈的实现

2.1.1 Mesh Networking 实现

`Mesh Networking` 中的文件列表和每个文件实现的功能如表 2.1 所示：

表 5: 表 2.1 Mesh Networking 文件描述

文件	功能
access.c	BLE Mesh 接入层
transport.c	BLE Mesh 底层/上层传输层
net.c	BLE Mesh 网络层
adv.c	用于发送 BLE Mesh 广播包的任务，一个用于处理收到的广播包的回调以及用于分配 adv 缓冲区的 API

2.1.2 Mesh Provisioning 实现

由于 Node/Provisioner 共存的限制，Mesh Provisioning 的实现分为两大模块。

实现 Node 启动配置的特定文件如表 2.2 所示：

表 6: 表 2.2 Mesh Provisioning（节点）文件描述

文件	功能
prov.c	BLE Mesh 节点配网 (PB-ADV & PB-GATT)
proxy_server.c	BLE Mesh 节点代理服务器相关功能
beacon.c	用于处理 BLE Mesh Beacon 的 API

实现 Provisioner 配置功能的特定文件如表 2.3 所示：

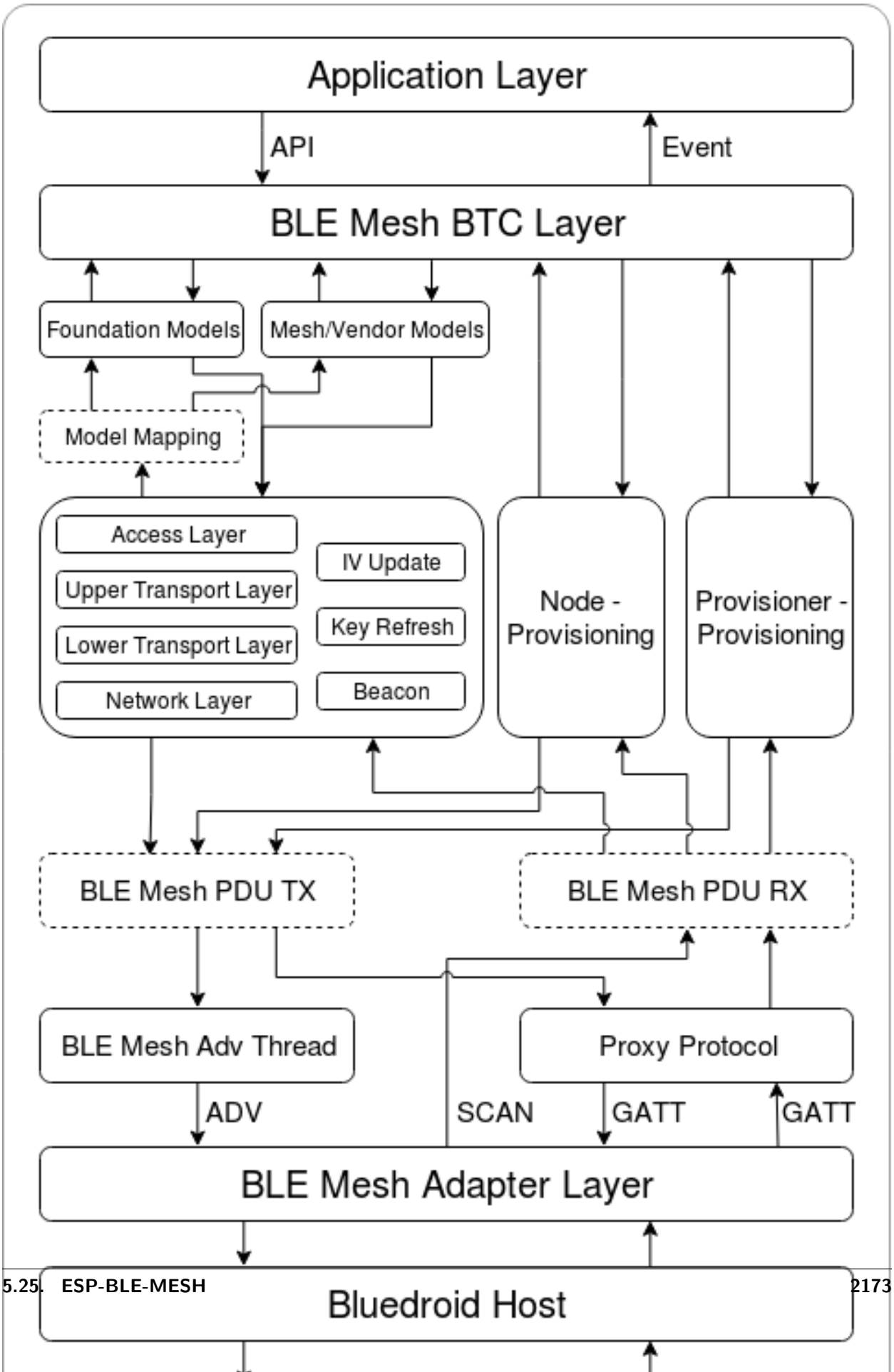
Application Layer
API
Event
BLE Mesh BTC Layer
Foundation Models
Mesh/Vendor Models
Model Mapping
Access Layer
Upper Transport Layer
Lower Transport Layer
Network Layer
IV Update
Key Refresh
Beacon
Node - Provisioning
Provisioner - Provisioning
BLE Mesh PDU TX
BLE Mesh PDU RX
BLE Mesh Adv Thread
Proxy Protocol
ADV
SCAN
GATT
GATT
BLE Mesh Adapter Layer
Bluedroid Host

表 7: 表 2.3 Mesh Provisioning (Provisioner) 文件描述

文件	功能
provisioner_prov.c	BLE Mesh Provisioner 配置入网 (PB-ADV & PB-GATT)
proxy_client.c	BLE Mesh 代理客户端相关功能
provisioner_beacon.c	BLE Mesh Provisioner 接收 Unprovisioned Device Beacon

2.1.3 Mesh Models 实现

Mesh Models 用于实现节点中所包含的模型的具体功能。服务器模型主要用于维护节点状态。客户端模型主要用于获取和修改节点状态。

表 8: Table 2.4 Mesh Models 文件描述

文件	功能
cfg_cli.c	发送 Configuration Client 消息，接收相应应答消息
cfg_srv.c	接收 Configuration Client 消息，发送适当应答消息
health_cli.c	发送 Health Client 消息，接收相应应答消息
health_srv.c	接收 Health Client 消息，发送适当应答消息
client_common.c	BLE Mesh 模型相关操作
generic_client.c	发送 BLE Mesh Generic Client 消息，接收相应应答消息
lighting_client.c	发送 BLE Mesh Lighting Client 消息，接收相应应答消息
sensor_client.c	发送 BLE Mesh Sensor Client 消息，接收相应应答消息
time_scene_client.c	发送 BLE Mesh Time Scene Client 消息，接收相应应答消息

2.2 Mesh Bearers 实现

Mesh Bearers 在实现时充分考虑了可移植性。当 ESP-BLE-MESH 协议栈需要移植到其它平台时，用户只需要修改 mesh_bearer_adapt.c 就能移植成功。

表 9: 表 2.5 Mesh Bearers 文件描述

文件	功能
mesh_bearer_adapt.c	BLE Mesh 承载层适配文件。此文件提供用于接收和发送 BLE Mesh ADV 和 GATT 相关数据包的接口。

注解: mesh_bearer_adapt.c 是对 Mesh 网络框架中 `Advertising Bearer` 和 `GATT Bearer` 的实现。

2.3 Mesh Applications 实现

我们提供了一系列用于客户开发的应用示例，用户可以基于*ESP-BLE-MESH 示例* 开发产品。

3. ESP-BLE-MESH 辅助程序

辅助程序指的是 ESP-BLE-MESH 协议栈中可选的功能。辅助程序的设计通常通过*CONFIG_BLE_MESH* 来实现代码的裁剪。

3.1 特性

- 低功耗
- 好友
- 中继
- 代理客户端/代理服务器

3.2 网络管理

- 节点移除程序
- 网络索引恢复程序
- 网络索引更新程序
- 秘钥更新程序
- 网络创建程序
- NVS 存储器

3.3 辅助程序实现

采用独立模块的设计主要考虑到两个因素：

- 该模块不具备分层实现的条件，其实现可以完全独立，不需要依赖其它模块。
- 模块中的函数会被反复使用到，因此最好设计成独立模块。独立模块如表 3.1 所示：

表 10: 表 3.1 模块文件描述

文件	功能
lpn.c	BLE Mesh 低功耗功能
friend.c	BLE Mesh 好友功能
net.c	BLE Mesh 中继功能、网络创建、网络索引更新程序、网络索引恢复程序、秘钥更新程序相关功能
proxy_server.c	BLE Mesh 代理服务器相关功能
proxy_client.c	BLE Mesh 代理客户端相关功能
settings.c	BLE Mesh NVS 存储器功能
main.c	BLE Mesh 协议栈初始化，协议栈使能，节点移除相关功能

ESP-BLE-MESH 常见问题手册

[English]

本文汇总了 ESP-BLE-MESH 协议栈开发的常见问题及解答，全文分为 7 个章节。

- *1. Provisioner 开发*
- *2. 节点开发*
- *3. ESP-BLE-MESH 和 Wi-Fi 共存*
- *4. 快速配网*
- *5. Log 帮助*
- *6. 示例帮助*
- *7. 其他*

用户可以参考这些章节，快速找到问题的答案。该文档会根据各种渠道收集的反馈进行更新。

1. Provisioner 开发

通常而言，Provisioner 用于配网未配网设备并形成 mesh 网络。组网后，设备的角色变成节点。

1.1 未配网设备加入 ESP-BLE-MESH 网络的流程是什么？

设备通过 Provisioner 加入 ESP-BLE-MESH 网络分为两个阶段，配网阶段和配置阶段。

- 配网阶段：为设备分配单播地址、添加网络密钥 (NetKey) 等。通过配网，设备加入 ESP-BLE-MESH 网络，身份从未配网设备变为节点。

- 配置阶段：为节点添加应用密钥 (AppKey)，并将应用密钥绑定到相应模型。配置期间，有些选项是可选的，比如为节点添加订阅地址、设置发布地址等。通过配置，该节点实际上可以向 Provisioner 发送消息，也可以接收来自 Provisioner 的消息。

1.2 如果 Provisioner 想要改变节点状态，其需满足什么条件？

- 需要有和节点的服务器模型相对应的客户端模型。
- 需要和节点有相同的、可用于加密消息的网络密钥和应用密钥。
- 需要知道节点的地址，可以是单播地址，也可以是订阅地址。

1.3 如何使用网络密钥和应用密钥？

- 网络密钥用于加密网络层的消息。具有相同网络密钥的节点视作在同一网络中，具有不同网络密钥的节点相互之间不能进行通信。
- 应用密钥用于加密上层传输层中的消息。如果服务器模型和客户端模型绑定的应用密钥不同，则无法实现相互通信。

1.4 如何生成网络密钥或应用密钥？是否可以采用固定的网络密钥或应用密钥？

- API *esp_ble_mesh_provisioner_add_local_net_key()* 可以用来添加包含固定值或随机值的网络密钥。
- API *esp_ble_mesh_provisioner_add_local_app_key()* 可以用来添加包含固定值或随机值的应用密钥。

1.5 Provisioner 的单播地址是不是固定的？

esp_ble_mesh_prov_t 中 `prov_unicast_addr` 的值用于设置 Provisioner 的单播地址，只能在初始化期间设置一次，此后不能更改。

1.6 Provisioner 的地址是否可以作为节点上报状态消息的目的地址？

Provisioner 的单播地址只能在初始化期间设置一次，此后不能更改。理论而言，只要节点知道 Provisioner 的单播地址，此地址便可用作节点上报状态消息的目的地址。节点在网络配置的过程中可以知道 Provisioner 的单播地址，因为 Provisioner 往节点发送消息时，消息的源地址就是 Provisioner 的单播地址。

订阅地址也可使用。Provisioner 订阅组地址或者虚拟地址，节点向该订阅地址发送消息。

1.7 被 Provisioner 配网到 ESP-BLE-MESH 网络中的第一个节点的单播地址是不是固定的？

esp_ble_mesh_prov_t 中 `prov_start_address` 的值用于设置 Provisioner 配网未配网设备的起始地址，即其首先配网的节点的单播地址。单播地址只能在初始化期间设置一次，此后不能修改。

1.8 手机 App 首先配置的节点的单播地址是不是固定的？

该 App 将确定单播地址，目前大多数单播地址是固定的。

1.9 如何知道当前 Provisioner 正在配网哪个未配网设备？

esp_ble_mesh_prov_t 中 `prov_attention` 的值由 Provisioner 在配网过程中设置给未配网设备。该值只能在初始化期间设置一次，此后不能修改。未配网设备加入 mesh 网络后可以用特定的方式来显示自己正在配网，比如灯光闪烁，以告知 Provisioner 其正在配网。

1.10 配网过程中，认证设备共有多少种方法？提供的范例中 provided examples 使用了什么方法？

共有四种设备认证方法，即 No OOB、Static OOB、Output OOB 和 Input OOB。提供的范例使用了 No OOB 的方式。

1.11 配置入网前，未配网设备的广播包可以携带哪些信息？

- Device UUID
- OOB Info
- URL Hash (可选的)

1.12 这些信息可以用于设备识别吗？

是的。每个设备都有独一无二的 Device UUID, 用户可以通过 Device UUID 识别设备。

1.13 当 Provisioner 配网的节点包含多个元素时，单播地址是如何分配的？

- Provisioner 会给设备的主元素分配一个单播地址，其余元素的单播地址在此基础上递增。
- 比如：如果一个未配网设备有三个元素，即主要元素、第二元素和第三元素。配网完成后，节点主元素的单播地址为 0x0002，节点第二元素的单播地址为 0x0003，节点第三元素的单播地址为 0x0004。

1.14 Provisioner 如何通过 Configuration Client Model 获取并且解析节点的构成数据？

- Provisioner 可以调用 *Configuration Client Model* API *esp_ble_mesh_config_client_set_state()* 设置参数，调用 *esp_ble_mesh_cfg_client_get_state_t* 中的 comp_data_get 获取节点的构成数据。
- 用户可以参考以下代码解析 Composition Data:

```
#include <stdio.h>
#include <string.h>
#include <stdint.h>

//test date: 0C001A0001000800030000010501000000800100001003103F002A00
//0C00 1A00 0100 0800 0300 0001 05 01 0000 0080 0100 0010 0310 3F002A00

// CID is 0x000C
// PID is 0x001A
// VID is 0x0001
// CRPL is 0x0008
// Features is 0x0003 - Relay and Friend features.
// Loc is "front" - 0x0100
// NumS is 5
// NumV is 1
// The Bluetooth SIG Models supported are: 0x0000, 0x8000, 0x0001, 0x1000,␣
↪0x1003
// The Vendor Models supported are: Company Identifier 0x003F and Model␣
↪Identifier 0x002A

typedef struct {
    int16_t cid;
    int16_t pid;
    int16_t vid;
    int16_t crpl;
    int16_t features;
    int16_t all_models;
    uint8_t sig_models;
    uint8_t vnd_models;
} esp_ble_mesh_composition_head;

typedef struct {
    uint16_t model_id;
```

(下页继续)

(续上页)

```
    uint16_t vendor_id;
} tsModel;

typedef struct {
    // reserve space for up to 20 SIG models
    uint16_t SIG_models[20];
    uint8_t numSIGModels;

    // reserve space for up to 4 vendor models
    tsModel Vendor_models[4];
    uint8_t numVendorModels;
} esp_ble_mesh_composition_decode;

int decode_comp_data(esp_ble_mesh_composition_head *head, esp_ble_mesh_
↪composition_decode *data, uint8_t *mystr, int size)
{
    int pos_sig_base;
    int pos_vnd_base;
    int i;

    memcpy(head, mystr, sizeof(*head));

    if(size < sizeof(*head) + head->sig_models * 2 + head->vnd_models * 4) {
        return -1;
    }

    pos_sig_base = sizeof(*head) - 1;

    for(i = 1; i < head->sig_models * 2; i = i + 2) {
        data->SIG_models[i/2] = mystr[i + pos_sig_base] | (mystr[i + pos_sig_
↪base + 1] << 8);
        printf("%d: %4.4x\n", i/2, data->SIG_models[i/2]);
    }

    pos_vnd_base = head->sig_models * 2 + pos_sig_base;

    for(i = 1; i < head->vnd_models * 2; i = i + 2) {
        data->Vendor_models[i/2].model_id = mystr[i + pos_vnd_base] | (mystr[i␣
↪+ pos_vnd_base + 1] << 8);
        printf("%d: %4.4x\n", i/2, data->Vendor_models[i/2].model_id);
```

(下页继续)

(续上页)

```
        data->Vendor_models[i/2].vendor_id = mystr[i + pos_vnd_base + 2] |␣
↪(mystr[i + pos_vnd_base + 3] << 8);
        printf("%d: %4.4x\n", i/2, data->Vendor_models[i/2].vendor_id);
    }

    return 0;
}

void app_main(void)
{
    esp_ble_mesh_composition_head head = {0};
    esp_ble_mesh_composition_decode data = {0};
    uint8_t mystr[] = { 0x0C, 0x00, 0x1A, 0x00,
                        0x01, 0x00, 0x08, 0x00,
                        0x03, 0x00, 0x00, 0x01,
                        0x05, 0x01, 0x00, 0x00,
                        0x00, 0x80, 0x01, 0x00,
                        0x00, 0x10, 0x03, 0x10,
                        0x3F, 0x00, 0x2A, 0x00};
    int ret;

    ret = decode_comp_data(&head, &data, mystr, sizeof(mystr));
    if (ret == -1) {
        printf("decode_comp_data error");
    }
}
```

1.15 Provisioner 如何通过获取的 Composition Data 进一步配置节点？

Provisioner 通过调用 *Configuration Client Model* API *esp_ble_mesh_config_client_set_state()* 来进行如下配置。

- 正确设置参数 *esp_ble_mesh_cfg_client_set_state_t* 中的 app_key_add，将应用密钥添加到节点中。
- 正确设置参数 *esp_ble_mesh_cfg_client_set_state_t* 中的 model_sub_add，将订阅地址添加到节点的模型中。
- 正确设置参数 *esp_ble_mesh_cfg_client_set_state_t* 中的 model_pub_set，将发布地址添加到节点的模型中。

1.16 节点可以自己添加相应的配置吗？

本法可用于特殊情况，如测试阶段。

- 此示例展示了节点如何为自己的模型添加新的组地址。

```
esp_err_t example_add_fast_prov_group_address(uint16_t model_id, uint16_t␣
↪group_addr)
{
    const esp_ble_mesh_comp_t *comp = NULL;
    esp_ble_mesh_elem_t *element = NULL;
    esp_ble_mesh_model_t *model = NULL;
    int i, j;

    if (!ESP_BLE_MESH_ADDR_IS_GROUP(group_addr)) {
        return ESP_ERR_INVALID_ARG;
    }

    comp = esp_ble_mesh_get_composition_data();
    if (!comp) {
        return ESP_FAIL;
    }

    for (i = 0; i < comp->element_count; i++) {
        element = &comp->elements[i];
        model = esp_ble_mesh_find_sig_model(element, model_id);
        if (!model) {
            continue;
        }
        for (j = 0; j < ARRAY_SIZE(model->groups); j++) {
            if (model->groups[j] == group_addr) {
                break;
            }
        }
        if (j != ARRAY_SIZE(model->groups)) {
            ESP_LOGW(TAG, "%s: Group address already exists, element index: %d
↪", __func__, i);
            continue;
        }
        for (j = 0; j < ARRAY_SIZE(model->groups); j++) {
            if (model->groups[j] == ESP_BLE_MESH_ADDR_UNASSIGNED) {
                model->groups[j] = group_addr;
```

(下页继续)

(续上页)

```
                break;
            }
        }
        if (j == ARRAY_SIZE(model->groups)) {
            ESP_LOGE(TAG, "%s: Model is full of group addresses, element␣
↪index: %d", __func__, i);
        }
    }

    return ESP_OK;
}
```

注解： 使能了节点的 NVS 存储器后，通过该方式添加的组地址以及绑定的应用密钥在设备掉电的情况下不能保存。这些配置信息只有通过 Configuration Client Model 配置时才会保存。

1.17 Provisioner 如何通过分组的方式控制节点？

通常而言，在 ESP-BLE-MESH 网络中实现组控制有两种方法，即组地址方法和虚拟地址方法。假设有 10 个设备，即 5 个带蓝灯的设备和 5 个带红灯的设备。

- 方案一：5 个蓝灯设备订阅一个组地址，5 个红灯设备订阅另一个组地址。Provisioner 往不同的组地址发送消息，即可实现分组控制设备。
- 方案二：5 个蓝灯设备订阅一个虚拟地址，5 个红灯设备订阅另一个虚拟地址，Provisioner 往不同的虚拟地址发送消息，即可实现分组控制设备。

1.18 Provisioner 如何将节点添加至多个子网？

节点配置期间，Provisioner 可以为节点添加多个网络密钥，拥有相同网络密钥的节点属于同一子网。Provisioner 可以通过不同的网络密钥与不同子网内的节点进行通信。

1.19 Provisioner 如何知道网络中的某个设备是否离线？

节点离线通常定义为：电源故障或其他原因导致的节点无法与 mesh 网络中的其他节点正常通信的情况。

ESP-BLE-MESH 网络中的节点间彼此不连接，它们通过广播通道进行通信。

此示例展示了如何通过 Provisioner 检测节点是否离线。

- 节点定期给 Provisioner 发送心跳包。如果 Provisioner 超过一定的时间未接收到心跳包，则视该节点离线。

注解： 心跳包的设计应该采用单包（字节数小于 11 个字节）的方式，这样收发效率会更高。

1.20 Provisioner 删除网络中的节点时，需要进行哪些操作？

通常而言，Provisioner 从网络中移除节点主要涉及三个步骤：

- 首先，Provisioner 将需要移除的节点添加至“黑名单”。
- 其次，Provisioner 启动密钥更新程序。
- 最后，节点执行节点重置程序，切换自身身份为未配网设备。

1.21 在密钥更新的过程中，Provisioner 如何更新节点的网络密钥？

- 通过正确设置参数 *esp_ble_mesh_cfg_client_set_state_t* 中的 `net_key_update`，使用 *Configuration Client Model* API *esp_ble_mesh_config_client_set_state()*，Provisioner 更新节点的网络密钥。
- 通过正确设置参数 *esp_ble_mesh_cfg_client_set_state_t* 中的 `app_key_update`，使用 *Configuration Client Model* API *esp_ble_mesh_config_client_set_state()*，Provisioner 更新节点的应用密钥。

1.22 Provisioner 如何管理 mesh 网络中的节点？

ESP-BLE-MESH 在示例中实现了一些基本的节点管理功能，比如 `esp_ble_mesh_store_node_info()`。ESP-BLE-MESH 还提供可用于设置节点本地名称的 API *esp_ble_mesh_provisioner_set_node_name()* 和可用于获取节点本地名称的 API *esp_ble_mesh_provisioner_get_node_name()*。

1.23 Provisioner 想要控制节点的服务器模型时需要什么？

Provisioner 在控制节点的服务器模型前，必须包括相应的客户端模型。

Provisioner 应当添加本地的网络密钥和应用密钥。

- Provisioner 调用 API *esp_ble_mesh_provisioner_add_local_net_key()* 以添加网络密钥。
- Provisioner 调用 API *esp_ble_mesh_provisioner_add_local_app_key()* 以添加应用密钥。

Provisioner 应当配置自己的客户端模型。

- Provisioner 调用 API *esp_ble_mesh_provisioner_bind_app_key_to_local_model()* 以绑定应用密钥至自己的客户端模型。

1.24 Provisoner 如何控制节点的服务器模型？

ESP-BLE-MESH 支持所有 SIG 定义的客户端模型。Provisioner 可以使用这些客户端模型控制节点的服务器模型。客户端模型分为 6 类，每类有相应的功能。

- Configuration Client Model
  - API *esp_ble_mesh_config_client_get_state()* 可用于获取 Configuration Server Model 的*esp_ble_mesh_cfg_client_get_state_t* 值。
  - API *esp_ble_mesh_config_client_set_state()* 可用于获取 Configuration Server Model 的*esp_ble_mesh_cfg_client_set_state_t* 值。
- Health Client Model
  - API *esp_ble_mesh_health_client_get_state()* 可用于获取 Health Server Model 的*esp_ble_mesh_health_client_get_state_t* 值。
  - API *esp_ble_mesh_health_client_set_state()* 可用于获取 Health Server Model 的*esp_ble_mesh_health_client_set_state_t* 值。
- Generic Client Models
  - API *esp_ble_mesh_generic_client_get_state()* 可用于获取 Generic Server Model 的*esp_ble_mesh_generic_client_get_state_t* 值。
  - API *esp_ble_mesh_generic_client_set_state()* 可用于获取 Generic Server Model 的*esp_ble_mesh_generic_client_set_state_t* 值。
- Lighting Client Models
  - API *esp_ble_mesh_light_client_get_state()* 可用于获取 Lighting Server Model 的*esp_ble_mesh_light_client_get_state_t* 值。
  - API *esp_ble_mesh_light_client_set_state()* 可用于获取 Lighting Server Model 的*esp_ble_mesh_light_client_set_state_t* 值。
- Sensor Client Models
  - API *esp_ble_mesh_sensor_client_get_state()* 可用于获取 Sensor Server Model 的*esp_ble_mesh_sensor_client_get_state_t* 值。
  - API *esp_ble_mesh_sensor_client_set_state()* 可用于获取 Sensor Server Model 的*esp_ble_mesh_sensor_client_set_state_t* 值。
- **Time and Scenes Client Models**

  - API *esp_ble_mesh_time_scene_client_get_state()* 可用于获取 Time and Scenes Server Model 的*esp_ble_mesh_time_scene_client_get_state_t* 值。
  - API *esp_ble_mesh_time_scene_client_set_state()* 可用于获取 Time and Scenes Server Model 的*esp_ble_mesh_time_scene_client_set_state_t* 值。

2. 节点开发

2.1 节点包含什么样的模型？

- ESP-BLE-MESH 中，节点由一系列的模型组成，每个模型实现节点的某些功能。
- 模型分为两种，客户端模型和服务器模型。客户端模型可以获取并设置服务器模型的状态。
- 模型也可以分为 SIG 模型和自定义模型。SIG 模型的所有行为都由官方定义，而自定义模型的行为均由用户定义。

2.2 每个模型对应的消息格式是不是固定的？

- 消息由 opcode 和 payload 组成，通过 opcode 进行区分。
- 与模型对应的消息的类型和格式都是固定的，这意味着模型之间传输的消息是固定的。

2.3 节点的模型可以使用哪些函数发送消息？

- 对于客户端模型，用户可以调用 API *esp_ble_mesh_client_model_send_msg()* 发送消息。
- 对于服务器模型，用户可以调用 API *esp_ble_mesh_server_model_send_msg()* 发送消息。
- 对于发布，用户可以调用 API *esp_ble_mesh_model_publish()* 发布消息。

2.4 如何实现消息传输不丢包？

如果用户要实现消息传输不丢包，则需有应答的消息。等待应答的默认时间在*CONFIG_BLE_MESH_CLIENT_MSG_TIMEOUT* 中设置。如果发送端等待应答超时，就会触发对应的超时事件。

注解： API *esp_ble_mesh_client_model_send_msg()* 中可以设置应答的超时时间。如果参数 `msg_timeout` 设为 **0**，那么超时时间便会采用默认值（4 秒）。

2.5 如何发送无应答的消息？

对于客户端模型，用户可以调用 API *esp_ble_mesh_client_model_send_msg()* with the parameter `need_rsp` set to `false` 发送无应答消息。

对于服务器模型，调用 API *esp_ble_mesh_server_model_send_msg()* 发送的消息总是无应答的消息。

2.6 如何为模型添加订阅地址？

通过 Configuration Client Model 添加订阅地址。

2.7 模型发送的消息和发布的消息有何不同？

调用 API *esp_ble_mesh_client_model_send_msg()* 或 *esp_ble_mesh_server_model_send_msg()* 发送的消息会在 Network Transmit 状态规定的期限内发送。

调用 API *esp_ble_mesh_model_publish()* 发布的消息将由模型发布状态决定是否发布。消息的发布一般是周期性的，或者有固定次数。发布周期和发布次数由模型发布状态控制，并且可以通过 Configuration Client Model 进行配置。

2.8 发送不分包消息时，最多可携带多少有效字节？

不分包消息的总有效载荷长度（可由用户设置）为 11 个八位位组，因此，如果消息的 opcode 为 2 个八位位组，则该消息可以携带 9 个八位位组的有效信息。对于 vendor 消息，由于 opcode 是 3 个八位位组，剩余的有效负载长度为 8 个八位位组。

2.9 什么时候应该使能节点的 Relay 功能？

如果 mesh 网络中检测到的节点很稀疏，用户可以使能节点的 Relay 功能。

如果 mesh 网络中检测到的节点很密集，用户可以选择仅使能一些节点的 Relay 功能。

如果 mesh 网络大小未知，用户可以默认使能 Relay 功能。

2.10 什么时候应该使能节点的 Proxy 功能？

如果未配网设备将由电话配网，则未配网设备应该使能 Proxy 功能，因为当前几乎所有电话都不支持通过广播承载层发送 ESP-BLE-MESH 数据包。并且，未配网设备成功配网成为 Proxy 节点后，其会通过 GATT 承载层和广播承载层与 mesh 网络中的其他节点通信。

2.11 如何使用代理过滤器?

代理过滤器用于减少 Proxy Client（如手机）和 Proxy Server（如节点）之间交换的 Network PDU 的数量。另外，通过代理过滤器，Proxy Client 可以明确请求仅接收来自 Proxy Server 的某些目标地址的 mesh 消息。

2.12 Relay 节点什么时候可以中继消息？

如果要中继消息，消息需满足以下要求。

- 消息存在于 mesh 网络中。
- 消息的目的地址不是节点的单播地址。
- 消息的 TTL 值需大于 1。

2.13 如果一条消息分成几段，那么其他 Relay 节点是接收到一段消息就中继还是等接收到完整的数据包才中继？

Relay 节点收到其中一段消息时就中继，而非一直等到接收所有的消息。

2.14 使用 Low Power 功能降低功耗的原理是什么？

- 开启无线电进行收听时，设备消耗能量。使能节点的低功耗功能后，它将在大多数时间内关闭无线电功能。
- 低功耗节点和好友节点需要合作，因此低功耗节点可以以适当或较低的频率接收消息，而无需一直收听。
- 当低功耗节点有一些新消息时，好友节点将为其存储消息。低功耗节点可以间隔固定时间轮询好友节点，以查看是否有新的消息。

2.15 设备断电后上电，如何能继续在网络中进行通讯？

在 *menuconfig* 中启用配置 `Store BLE Mesh Node configuration persistently` 。

2.16 如何实现将节点自检的信息发送出来？

推荐节点通过 Health Server Model 定期发布其自检结果。

2.17 节点间如何传输消息？

节点间传输信息的可能应用场景是，一旦烟雾警报检测到高浓度的烟雾，就会触发喷淋设备。有两种实现方法。

- 方法 1：喷淋设备订阅组地址。当烟雾警报器检测到高浓度的烟雾时，它会发布一条消息，该消息的目标地址是喷淋设备已订阅的组地址。
- 方法 2：Provisioner 可以配置喷淋设备的单播地址为烟雾报警器的地址。当检测到高浓度的烟雾时，烟雾警报器以喷淋设备的单播地址为目标地址，将消息发送到喷淋设备。

2.18 设备通信必须要网关吗？

- 情况 1：节点仅在 mesh 网络内通信。这种情况下，不需要网关。ESP-BLE-MESH 网络是一个泛洪的网络，网络中的消息没有固定的路径，节点与节点之间可以随意通信.
- 情况 2：如果用户想要远程控制网络，比如在到家之前打开某些节点，则需要网关。

2.19 何时使用 IV Update 更新程序？

一旦节点的底层检测到发送的消息的序列号达到临界值，IV Update 更新程序便会启用。

2.20 如何启用 IV Update 更新程序？

节点可以使用带有 Secure Network Beacon 的 IV Update 更新程序。

3. ESP-BLE-MESH 和 Wi-Fi 共存

3.1 Wi-Fi 和 ESP-BLE-MESH 共存时，支持哪些模式？

目前，只有 Wi-Fi STA 模式支持共存。

3.2 Wi-Fi 和 ESP-BLE-MESH 共存时，为什么 Wi-Fi 吞吐量很低？

未搭载 PSRAM 的 ESP32-DevKitC 开发板，Wi-Fi 和 ESP-BLE-MESH 共存可以正常运行，但是吞吐率较低。当 Wi-Fi 和 ESP-BLE-MESH 共存时，搭载 PSRAM 的 ESP32-DevKitC 速率可以稳定在 1 Mbps 以上。

应使能 menuconfig 中的一些配置来支持 PSRAM。

- `ESP32-specific --> Support for external,SPI-connected RAM --> Try to allocate memories of Wi-Fi and LWIP...`

- `Bluetooth --> Bluedriod Enable --> BT/BLE will first malloc the memory from the PSRAM`
- `Bluetooth --> Bluedriod Enable --> Use dynamic memory allocation in BT/BLE stack.`
- `Bluetooth --> Blutooth controller --> BLE full scan feature supported.`
- `Wi-Fi --> Software controls Wi-Fi/Bluetooth coexistence --> Wi-Fi`

4. 快速配网

4.1 为什么需要快速配网？

通常而言，存在少量未配网设备时，用户可以逐个配置。但是如果有大量未配网设备（比如 100 个）时，逐个配置会耗费大量时间。通过快速配网，用户可以在约 50 秒内配网 100 个未配网设备。

4.2 为什么会出现 EspBleMesh App 在快速配网期间长时间等待的情况？

快速配网期间，代理节点在配置完一个节点后会断开与 APP 的连接，待所有节点配网完成后再与 APP 重新建立连接。

4.3 为什么 APP 中显示的节点地址的数量比现有的节点地址更多？

每完成一次快速配网后、开始新一次快速配网前，APP 会存有上次配网的数据，因此 APP 中显示的节点地址的数量比现有的节点地址更多。

4.4 在 EspBleMesh App 中输入的 ** count ** 值有什么用途？

此 **count** 值提供给 App 配置的代理节点，以决定何时提前开始 Proxy 广播信息。

4.5 运行以下示例 fast_prov_server 的节点的 Configuration Client Model 何时开始工作？

使能了 Temporary Provisioner 功能后，Configuration Client Model 会开始工作。

4.6 Temporary Provisioner 功能会一直处于使能的状态吗？

节点收到打开/关闭电灯的消息后，所有节点会禁用其 Temporary Provisioner 功能并且转化为一般节点。

5. Log 帮助

当 ESP-BLE-MESH 协议栈底层出现错误或者警告时，您可以在这儿找到这些错误和警告的含义。

5.1 `ran out of retransmit attempts` 代表什么？

节点发送分段消息时，由于某些原因，接收端未收到完整的消息。节点会重传消息。当重传次数达到最大重传数时，会出现该警告，当前最大重传数为 4。

5.2 `Duplicate found in Network Message Cache` 代表什么？

当节点收到一条消息时，它会把该消息与网络缓存中存储的消息进行比较。如果在缓存中找到相同的消息，这意味着之前已接受过该消息，则该消息会被丢弃。

5.3 `Incomplete timer expired` 代表什么？

当节点在一定时间段（比如 10 秒）内未收到分段消息的所有段时，则 Incomplete 计时器到时，并且出现该警告。

5.4 `No matching TX context for ack` 代表什么？

当节点收到一个分段 ack 且不能找到任何自己发送的与该 ack 相关的消息时，会出现该警告。

5.5 `No free slots for new incoming segmented messages` 代表什么？

当节点没有空间来接收新的分段消息时，会出现该警告。用户可以通过配置*CONFIG_BLE_MESH_RX_SEG_MSG_COUNT* 扩大空间。

5.6 `Model not bound to AppKey 0x0000` 代表什么？

当节点发送带有模型的消息且该模型尚未绑定到索引为 0x000 的应用密钥时，会出现该报错。

5.7 `Busy sending message to DST xxxx` 代表什么？

该错误表示节点的客户端模型已将消息发送给目标节点，并且正在等待响应，用户无法将消息发送到单播地址相同的同一节点。接收到相应的响应或计时器到时后，可以发送另一条消息。

6. 示例帮助

6.1 ESP-BLE-MESH 回调函数如何分类？

- API *esp_ble_mesh_register_prov_callback()* 用于注册处理配网和入网相关事件的回调函数。
- API *esp_ble_mesh_register_config_client_callback()* 用于注册处理 Configuration Client Model 相关事件的回调函数。
- API *esp_ble_mesh_register_config_server_callback()* 用于注册处理 Configuration Server Model 相关事件的回调函数。
- API *esp_ble_mesh_register_health_client_callback()* 用于注册处理 Health Client Model 相关事件的回调函数。
- API *esp_ble_mesh_register_health_server_callback()* 用于注册处理 Health Server Model 相关事件的回调函数。
- API *esp_ble_mesh_register_generic_client_callback()* 用于注册处理 Generic Client Models 相关事件的回调函数。
- API *esp_ble_mesh_register_light_client_callback()* 用于注册处理 Lighting Client Models 相关事件的回调函数。
- API *esp_ble_mesh_register_sensor_client_callback()* 用于注册处理 Sensor Client Model 相关事件的回调函数。
- API *esp_ble_mesh_register_time_scene_client_callback()* 用于注册处理 Time and Scenes Client Models 相关事件的回调函数。
- API *esp_ble_mesh_register_custom_model_callback()* 用于注册处理自定义模型和未实现服务器模型的相关事件的回调函数。

7. 其他

7.1 如何打印数据包？

示例使用如下函数 `ESP_LOG_BUFFER_HEX()` 打印信息语境，而 ESP-BLE-MESH 协议栈使用 `bt_hex()` 打印。

7.2 重启 ESP32 应使用哪个 API？

API *esp_restart()*.

7.3 如何监测任务栈的剩余空间？

API *vTaskList()* 可以用于定期打印任务栈的剩余空间。

7.4 如何在不更改 menuconfig 输出级别的情况下改变 log 级别？

无需使用 menuconfig，可以通过 API *esp_log_level_set()* 修改 log 的输出级别。

ESP-BLE-MESH Terminology

[English]

表 11: 表 1 ESP-BLE-MESH 术语 - 身份

术语	官方定义	详细说明
未配网设备	“A device that is not a member of a mesh network is known as an unprovisioned device.”	示例：照明装置、温控设备、制造设备和电动门等。
节点	“A node is a provisioned device.”	经配网加入 ESP-BLE-MESH 网络后，未配网设备的身份转变成节点。节点（如照明装置、温控设备、制造设备和电动门）是指能在蓝牙 ESP-BLE-MESH 网络中发送、接收或中继消息的设备，且节点可以选择性地支持一个或多个子网。
中继节点	“A node that supports the Relay feature and has the Relay feature enabled is known as a Relay node.”	中继节点接收并中继 ESP-BLE-MESH 消息，因此消息可以传输得更远。用户可以根据节点的状态来决定是否使能节点的中继功能。消息可以中继多次，每次中继为“一跳”，消息最多可有 126 跳，足以让消息在广阔的区域内传输。
代理节点	“A node that supports the Proxy feature and has the Proxy feature enabled is known as a Proxy node.”	代理节点从一个承载层（通常包括广播承载层和 GATT 承载层）接收消息，并通过另一个承载层重新发送消息。其目的是将只支持 GATT 承载层的通讯设备接入到 ESP-BLE-MESH 网络中。通常而言，手机 App 需要一个代理节点才能接入 Mesh 网络。没有代理节点，手机 App 无法与 Mesh 网络中成员通信。
好友节点	“A node that supports the Friend feature, has the Friend feature enabled, and has a friendship with a node that supports the Low Power feature is known as a Friend node.”	好友节点相当于低功耗节点（LPN）的备份，可存储发往低功耗节点的消息及安全更新信息；当低功耗节点需要这些存储的信息时，这些信息便会被传输至低功耗节点。低功耗节点必须与支持好友特性的另一节点建立“友谊”，以减少其接收器的占空比，从而降低低功耗节点的功耗。低功耗节点需要找到好友节点，与其建立友谊关系，其中涉及的过程称为“友谊建立”。低功耗节点与好友节点的搭配可让低功耗节点规划对无线电的使用，从而以适当或较低的频率接收消息，无需保持收听状态。低功耗节点会轮询好友节点以查看是否有新的消息。
低功耗节点	“A node that supports the Low Power feature and has a friendship with a node that supports the Friend feature is known as a Low Power node.”	低功耗节点通过轮询从好友节点获取信息，比如消息、安全更新等。
启动配置设备（以下称为 Provisioner）	“A node that is capable of adding a device to a mesh network.”	能够配网未配网设备的设备称为启动配置设备。这一流程通常需要通过产品制造商的提供的 App 来实现，并可在网关、智能手机、平板电脑和其他载体上使用。

表 12: 表 2 ESP-BLE-MESH 术语 - 节点构成

术语	官方定义	详细说明
状态	“A value representing a condition of an element that is exposed by an element of a node.”	ESP-BLE-MESH 网络中的每台设备都具有一组独立的状态值，表示设备的某些状态，比如照明设备的亮度、颜色等状态。更改状态值会修改设备本身的物理状态，比如更改设备的开关状态值实际是在打开或关闭设备。
模型	“A model defines the basic functionality of a node.”	一个节点可能包含多个模型，而每个模型定义了节点的基本功能，比如节点所需要的状态、控制状态的消息以及处理消息所产生的动作等。节点功能的实现是基于模型的，模型可分为 SIG 模型和自定义模型，前者由 SIG 定义，而后者由用户定义。
元素	“An addressable entity within a device.”	一个节点可以包含一个或多个元素，每个元素都有一个单播地址和一个或多个模型，并且同一元素所包含的模型不可以出现重复。
节点构成状态	“The Composition Data state contains information about a node, the elements it includes, and the supported models.”	通过读取节点构成状态的值，用户可以了解节点的基本信息，比如元素的数量及每个元素中的模型。Provisioner 通过获取这个消息对设备进一步配置，比如配置节点的订阅地址与发布地址。

表 13: 表 3 ESP-BLE-MESH 术语 - 特性

术语	官方定义	详细说明
低功耗特性	“The ability to operate within a mesh network at significantly reduced receiver duty cycles only in conjunction with a node supporting the Friend feature.”	低功耗功能可降低节点的功耗。当低功耗节点寻找好友节点、且附近有多个好友节点时，它会通过算法选择最适合的好友节点。
好友特性	“The ability to help a node supporting the Low Power feature to operate by storing messages destined for those nodes.”	通过使能好友特性，节点可以帮助存储低功耗节点的信息。使能了好友特性的节点可能会产生更大的功耗和内存消耗。
中继特性	“The ability to receive and retransmit mesh messages over the advertising bearer to enable larger networks.”	中继特性能让 ESP-BLE-MESH 的消息在节点之间实现多次跳跃，传输距离可超过两个节点之间直接进行无线电传输的范围，从而覆盖整个网络。使能了中继特性的节点中继消息时，只中继其所在子网的消息，不中继其它子网的消息。使能了中继特性的节点中继分段消息时不考虑数据的完整性。节点每收到一条分段消息便直接中继，不会等待收到完整的消息。
代理特性	“The ability to receive and retransmit mesh messages between GATT and advertising bearers.”	代理特性的目的是允许不具备广播承载层的节点访问 ESP-BLE-MESH 网络。代理特性通常为需要和手机 App 连接的节点所用。

表 14: 表 4 ESP-BLE-MESH 术语 - 配置入网

术语	官方定义	详细说明
PB-ADV	“PB-ADV is a provisioning bearer used to provision a device using Generic Provisioning PDUs over the advertising channels.”	PB-ADV 通过广播通道传输配网过程中产生的数据包。只有 Provisioner 和未配网设备都支持 PB-ADV 时才可使用这种方法进行配网。
PB-GATT	“PB-GATT is a provisioning bearer used to provision a device using Proxy PDUs to encapsulate Provisioning PDUs within the Mesh Provisioning Service.”	PB-GATT 通过连接通道传输配网过程中产生的数据包。如果未配网设备想使用此方式进行配网，其需要实现相关的 Mesh Provisioning Service。未实现此服务的未配网设备不能通过 PB-GATT 承载层配网接入 mesh 网络。
配置入网	“Provisioning is a process of adding an unprovisioned device to a mesh network, managed by a Provisioner.”	经过配网，“未配网设备” 的身份转变为 “节点”，成为 ESP-BLE-MESH 网络中的一员。
认证方式	“Authentication is a step during the provisioning of nodes.”	未配网设备有四种认证方法：输入带外 (Input OOB)、输出带外 (Output OOB)、静态带外 (Static OOB) 和无带外 (No OOB)。
输入带外 (Input OOB)	Input Out-of-Band	比如，Provisioner 生成并显示随机数，然后提示用户采取适当操作将随机数输入未配网的设备中。以照明开关为例，用户可以在一定时间内数次按下按钮，以这种形式输入 Provisioner 端显示的随机数。输入带外认证方法与输出带外的认证方法类似，但设备的角色相反。
输出带外 (Output OOB)	Output Out-of-Band	比如，未配网设备会选择一个随机数，并通过与其功能兼容的方式输出该数字。如果未配网设备是一个灯泡，则其能够闪烁指定的次数。如果未配网设备有 LCD 屏幕，则可以将随机数显示为多位数值。启动 Provisioner 的用户需要输入观察到的数字，来认证未配网的设备。
静态带外 (Static OOB)	Static Out-of-Band	静态 OOB 的认证方法：使用静态 OOB 信息。如果需要使用无 OOB 信息，请将静态 OOB 字段赋值为 0。如果需要使用 OOB 信息，请使用静态 OOB 信息认证正在配网的设备。
无带外 (No OOB)	No Out-of-Band	无 OOB 的认证方法：将 “静态 OOB” 字段赋值为 0。采用这种方式相当于不认证未配网的设备。

表 15: 表 5 ESP-BLE-MESH 术语 - 地址

术语	官方定义	详细说明
未分配地址	“This is a special address type, with a value of 0x0000. Its use indicates that an Element has not yet been configured or had a Unicast Address assigned to it.”	未配置的元素地址或未分配的元素地址都称为未分配地址。鉴于这些元素没有固定的地址，它们不会用于消息的传输。建议在设置用户代码的地址之前，将该地址的值设为未分配地址。
单播地址	“A unicast address is a unique address allocated to each element.”	在配网期间，Provisioner 会给网络中处于生命周期内节点的每个元素分配一个单播地址。单播地址可能会出现在消息的源/目标地址字段中。发送到单播地址的消息只能由拥有该单播地址的元素进行处理。
虚拟地址	“A virtual address represents a set of destination addresses. Each virtual address logically represents a Label UUID, which is a 128-bit value that does not have to be managed centrally.”	虚拟地址与特定的 UUID 标签相关联，可以用作模型的发布地址或订阅地址。UUID 标签是与一个或多个节点的元素相关联的 128 位值。虚拟地址的第 15 位和第 14 位分别设置为 1 和 0。从第 13 位到第 0 位设置为散列值（提供 16384 个散列值）。散列是 UUID 标签的派生。使用订阅元素检查完整的 128 位 UUID 十分低效，而散列值提供了一种更有效的方法来确定最终将哪些消息发送到哪些元素。
群组地址	“A group address is an address that is programmed into zero or more elements.”	群组地址是 ESP-BLE-MESH 网络中的另一种多播地址，通常用于将节点进行分组。发送到 all-proxies 地址的信息应由启用了代理功能的所有节点的主要元素处理。发送到 all-friends 地址的消息应由启用了好友功能的所有节点的主要元素处理。发送到 all-relays 地址的消息应由启用了中继功能的所有节点的主要元素处理。发送到 all-nodes 地址的消息应由所有节点的主要元素处理。

表 16: 表 6 ESP-BLE-MESH 术语 - 安全

术语	官方定义	详细说明
设备密钥 (DevKey)	"There is also a device key, which is a special application key that is unique to each node, is known only to the node and a Configuration Client, and is used to secure communications between the node and a Configuration Client."	设备密钥让您能够配网未配网设备、配置节点。设备密钥用来加密配置信息，即配置设备时 Provisioner 和节点之间传输的消息。
应用密钥 (AppKey)	"Application keys are used to secure communications at the upper transport layer."	应用密钥用于应用数据传递至应用层过程中对应用数据的解密，和应用层下发过程中对数据的加密。网络中的一些节点有特定的用途，并且可以根据应用程序的需求对一些潜在敏感数据的访问进行限制。通过特定的应用密钥，这些节点与特定应用程序相关联。通常而言，使用不同应用密钥的领域有安全（楼宇门禁、机房门禁和 CEO 办公室门禁）、照明（工厂、外部楼宇和人行道）和 HVAC 系统。应用密钥绑定在网络密钥上，这意味着应用密钥仅在绑定网络密钥的情况下使用。每一个应用密钥仅可绑定到一个网络密钥。
主安全资料	"The master security material is derived from the network key (NetKey) and can be used by other nodes in the same network. Messages encrypted with master security material can be decoded by any node in the same network. "	使用好友安全材料加密的相应友谊消息有：1. 好友轮询 (Friend Poll)，2. 好友更新 (Friend Update)，3. 好友订阅列表 (Friend Subscription List)，添加/删除/确认，4. 好友节点发送到低功耗节点的 "已存储消息"，使用主安全材料加密的相应友谊消息有：1. 好友清除 (Friend Clear)，2. 好友清除确认 (Friend Clear Confirm)。根据应用程序的设置，从低功耗节点发送到好友节点的消息会使用友谊安全材料或主安全材料进行加密，前者用于低功耗节点与好友节点之间的消息传输，而后者用于其他网络消息。

表 17: 表 7 ESP-BLE-MESH 术语 - 消息

术语	官方定义	详细说明
重组 / 分包	“Segmentation and reassembly (SAR) is a method of communication network, which is divided into small units before transmitting packets and reassembled in a proper order at the communication receiving end.”	底层传输层会自动分包过大的消息。接收端会回复一条应答消息，根据应答消息，发送端会重新向接收端发送其未接收到的数据包。这些都是底层传输层自动完成的。未分包的消息最多携带 15 个字节，其中 4 个字节是 transMIC，所以剩余 11 个字节；在分包的情况下，前面的包中每包有 12 个有效字节，最后一个包中有 8 个有效字节。特殊情况：一个较短的包需要底层传输端强制分包，这种情况下有 8 个有效字节。
无应答 / 有应答	“There are two types of messages: Unacknowledged or Acknowledged.”	根据接收端是否需要发送应答消息，发送的消息可分为两种。发送端需要设置最大重传次数。

表 18: 表 8 ESP-BLE-MESH 术语 - 基础模型

术语	官方定义	详细说明
Configuration Server Model	“This model is used to represent a mesh network configuration of a device.”	节点必须包含 Configuration Server Model，其负责维护配置相关的状态。Configuration Server Model 维护的状态包含：网络密钥名单 (NetKey List)、应用密钥名单 (AppKey List)、模型绑定的应用密钥名单 (Model to AppKey List)、节点身份 (Node Identity)、密钥更新阶段 (Key Refresh Phase)、心跳消息发布 (Heartbeat Publish)、心跳消息订阅 (Heartbeat Subscription)、网络传输 (Network Transmit) 和中继重传 (Relay Retransmit) 等。
Configuration Client Model	“The model is used to represent an element that can control and monitor the configuration of a node.”	Configuration Client Model 通过消息控制 Configuration Server Model 维护的状态。Provisioner 必须包含 Configuration Client Model，有了该模型才可发送 “Configuration Composition Data Get” 等配置消息。
Health Server Model	“This model is used to represent a mesh network diagnostics of a device.”	Health Server Model 主要用于设备检查自身状态，查看自身是否发生错误。Health Server model 维护的状态包含：当前故障 (Current Fault)、已登记故障 (Registered Fault)、健康周期 (Health Period) 和关注计时器 (Attention Timer)。
Health Client Model	“The model is used to represent an element that can control and monitor the health of a node.”	Health Client Model 通过消息控制 Health Server Model 维护的状态。该模型可通过消息 “Health Fault Get” 获取其他节点的自检信息。

表 19: 表 9 ESP-BLE-MESH 术语 - 网络管理

术语	官方定义	详细说明
密钥更新程序	“This procedure is used when the security of one or more network keys and/or one or more of the application keys has been compromised or could be compromised.”	密钥更新程序用于更新 ESP-BLE-MESH 网络的网络密钥和应用密钥。当一个或多个网络密钥和/或一个或多个应用密钥的安全受到威胁或可能受到威胁时，会启动密钥更新程序。通常而言，在网络中某些节点移除后可以进行密钥更新。
IV 更新程序	“A node can also use an IV Update procedure to signal to peer nodes that it is updating the IV Index.”	IV 更新程序用于更新 ESP-BLE-MESH 网络的 IV Index 的值，这个值和消息加密时所需的随机数相关。为了保证随机数的值不重复，所以将这个值定期增加。IV Index 是一个 32 位的值，是一种共享网络资源，比如一个 mesh 网中的所有节点共享一个 IV Index 值。IV Index 从 0x00000000 开始，在 IV 更新过程中递增，并由特定的进程维护，以保证整个 Mesh 网内共享一个 IV Index。当节点认为它有耗尽其序列号的风险，或它确定另一个节点即将耗尽其序列号时，可以启动该程序。注意：每次的更新时间不得低于 96 小时。节点接收到 secure network beacon 或者确定自己的序列号大于特定值时，会触发 IV 更新程序。

官方定义摘自 ESP-BLE-MESH Glossary of Terms. 查看更多术语，也请参照上述网址。

蓝牙 SIG 文档

- BLE Mesh Profile Specification
- BLE Mesh Model Specification
- An Intro to Bluetooth Mesh Part 1 / Part 2
- The Fundamental Concepts of Bluetooth Mesh Networking, Part 1 / Part 2
- Bluetooth Mesh Networking: Friendship
- Management of Devices in a Bluetooth Mesh Network
- Bluetooth Mesh Security Overview
- Provisioning a Bluetooth Mesh Network Part 1 / Part 2

5.26 BluFi

[English]

5.26.1 概览

BluFi 是一款基于蓝牙通道的 Wi-Fi 网络配置功能，适用于 ESP32。它通过安全协议将 Wi-Fi 配置和证书传输到 ESP32，然后 ESP32 可基于这些信息连接到 AP 或建立 SoftAP。

BluFi 流程的关键部分包括数据的分片、加密、校验和验证。

用户可按需自定义用于对称加密、非对称加密和校验的算法。这里我们采用 DH 算法进行密钥协商、128-AES 算法用于数据加密、CRC16 算法用于校验和验证。

5.26.2 BluFi 流程

BluFi 配网功能包含配置 SoftAP 和 Station 两部分。

下面以配置 Station 为例说明配置步骤。BluFi 配网的配置 Station 包含广播、连接、服务发现、协商共享密钥、传输数据、回传连接状态等步骤。

5.26.3 ESP32 配网流程

1. ESP32 开启 GATT Server 功能，发送带有特定 *adv data* 的广播。你可以自定义该广播，该广播不属于 BluFi Profile。
2. 使用手机 APP 搜索到该特定广播，手机作为 GATT Client 连接 ESP32。你可以决定使用哪款手机 APP。
3. GATT 连接建立成功后，手机向 ESP32 发送“协商过程”数据帧（详情见*BluFi 传输格式* ）。
4. ESP32 收到“协商过程”数据帧后，会按照使用者自定义的协商过程来解析。
5. 手机与 ESP32 进行密钥协商。协商过程可使用 DH/RSA/ECC 等加密算法进行。
6. 协商结束后，手机端向 ESP32 发送“设置安全模式”控制帧。
7. ESP32 收到“设置安全模式”控制帧后，使用经过协商的共享密钥以及配置的安全策略对通信数据进行加密和解密。
8. 手机向 ESP32 发送“BluFi 传输格式”定义的 SSID、Password 等用于 Wi-Fi 连接的必要信息。
9. 手机向 ESP32 发送“Wi-Fi 连接请求”控制帧，ESP32 收到之后，识别为手机已将必要的信息传输完毕，准备连接 Wi-Fi。
10. ESP32 连接到 Wi-Fi 后，发送“Wi-Fi 连接状态报告”控制帧到手机，以报告连接状态。至此配网结束。

注解:

1. 安全模式设置可在任何时候进行，ESP32 收到安全模式的配置后，会根据安全模式指定的模式进行安全相关的操作。

2. 进行对称加密和解密时，加密和解密前后的数据长度必须一致，支持原地加密和解密。

5.26.4 配网流程图

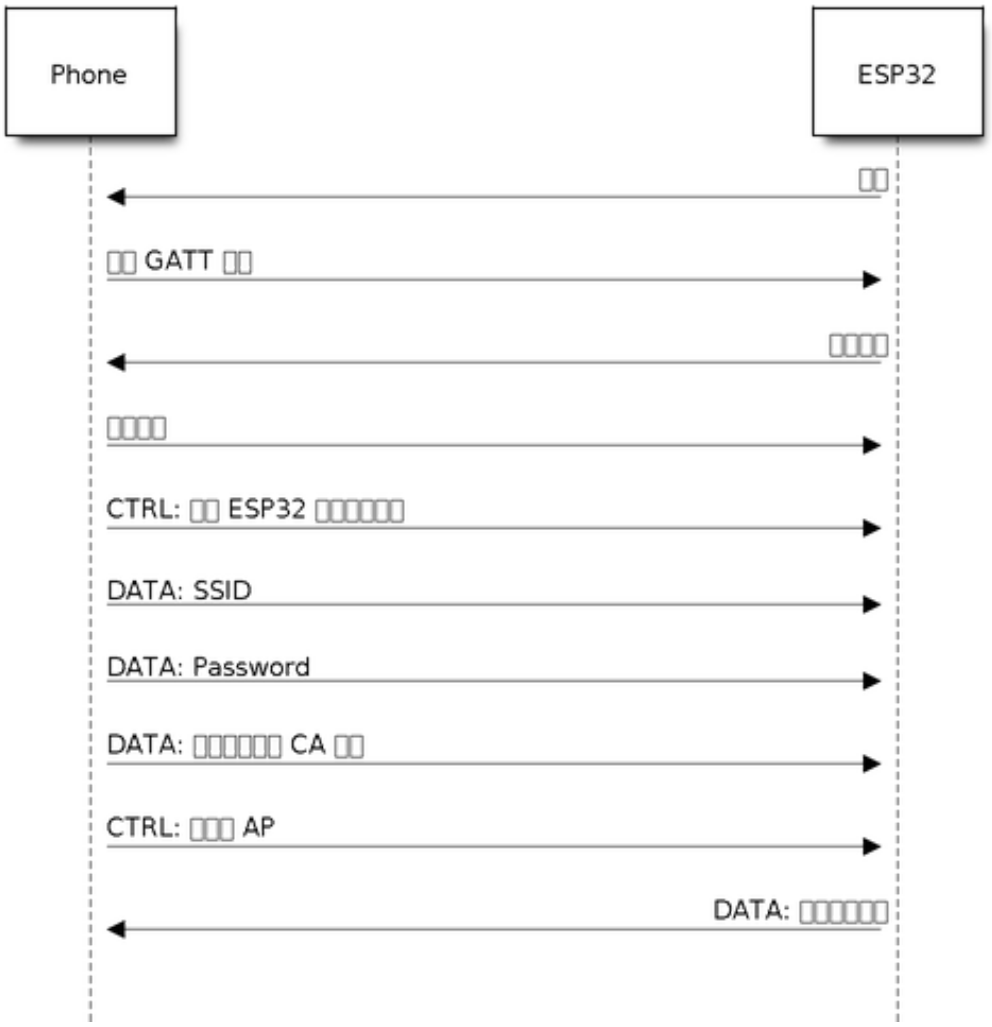

图 71: BluFi Flow Chart

5.26.5 BluFi 传输格式

手机 APP 与 ESP32 之间的 BluFi 通信格式定义如下：

帧不分片情况下的标准格式 (8 bit)：

Description	Value
LSB - Type	1
Frame Control	1
Sequence Number	1
Data Length	1
Data	${Data Length}
MSB - CheckSum	2

如果 **Frame Control** 帧中的 **More Frag** 使能，则 **Total Content Length** 为数据帧中剩余部分的总长度，用于报告终端需要分配多少内存。

帧分片格式（8 bit）：

Description	Value	
LSB - Type	1	
FrameControl(Frag)	1	
SequenceNumber	1	
DataLength	1	
Data	Total Content Length	2
	Content	${Data Length} - 2
MSB - CheckSum	2	

通常情况下，控制帧不包含数据位，Ack 帧类型除外。

Ack 帧格式（8 bit）：

Description	Value	
LSB - Type (Ack)	1	
Frame Control	1	
SequenceNumber	1	
DataLength	1	
Data	Acked Sequence Number	2
MSB - CheckSum	2	

1. Type

   类型域，占 1 byte。分为 Type 和 Subtype（子类型域）两部分, Type 占低 2 bit，Subtype 占高 6 bit。

   - 控制帧，暂不进行加密，可校验；
   - 数据帧，可加密，可校验。

   1.1 控制帧 (0x0b’00)

控制帧 / 0x0b’00	含义	解释	备注
0x0b’000000	Ack	用来回复对方发的帧，Ack 帧的 Data 域使用回复对象帧的 Sequence 值。	Data 域使用 1 byte Sequence 值，与恢复对象帧的 Sequence 值相同。
0x1b’000001	Set ESP32 to the security mode.	通知 ESP32 发送数据时使用的安全模式，在该过程中可设置多次，每次设置后影响后续安全模式。在不设置的情况下，ESP32 默认控制帧和数据帧均为无校验、无加密。手机到 ESP32 方向依赖于帧 Control 域。	Data 域占用 1 byte。高 4 bit 为控制帧的安全模式，低 4bit 为数据帧的安全模式。
			b’0000：无校验、无加密；
			b’0001：有校验、无加密；
			b’0010：无校验、有加密；
			b’0011：有校验、有加密。
0x2b’000010	Set the Wi-Fi opmode of ESP32.	设置 ESP32 的 Wi-Fi 模式，帧包含 opmode 信息。	data[0] 用于表示 opmode 类型，包括：
			0x00: NULL;
			0x01: STA;
			0x02: SoftAP;
			0x03: SoftAP&STA.
			如果设置有包含 AP，请尽量优先设置 AP 模式的 SSID/Password/Max Conn Number 等。
0x3b’000011	Connect ESP32 to the AP.	通知 ESP32，必要的信息已经发送完毕，可以连接 AP。	不包含 Data 域。
0x4b’000100	Disconnect ESP32 from the AP.	通知 ESP32 断开与 AP 的连接	不包含 Data 域。
0x5b’000101	Get the status of Wi-Fi.	获取 ESP32 的 Wi-Fi 模式和状态等信息。	不包含 Data 域。ESP32 收到此控制帧后，后续会通过 Wi-Fi 连接状态报告 (Wi-Fi Connection State Report) 数据帧来回复手机端当前所处的 opmode、连接状态、SSID 等信息。提供给手机端的信息由应用决定。
0x6b’000110	Disconnect the STA	处于 SoftAP 模式时，踢掉某个 STA 设备。	data[0~5] 为 STA 设备的 MAC 地址，如有多个 STA，则 [6-11] 为第二个，依次类推

1.2 数据帧 (0x1b’ 01)

数据帧	含义	解释
0x0 b’ 000000	Negotiation data.	用来发送协商数据，传输到应用层注册的回调函数。
0x1 b’ 000001	BSSID for STA mode.	STA 将要连接的 AP 的 BSSID（用于隐藏 SSID)。
0x2 b’ 000010	SSID for STA mode.	STA 将要连接的 AP 的 SSID。
0x3 b’ 000011	Password for STA mode.	STA 将要连接的 AP 的密码。
0x4 b’ 000100	SSID for SoftAP mode.	SoftAP 模式使用的 SSID。
0x5 b’ 000101	Password for SoftAPmode.	SoftAP 模式使用的密码。
0x6 b’ 000110	Max connection number for SoftAP mode.	AP 模式的最大连接数。
0x7b’ 000111	Authentication mode for SoftAP mode.	AP 模式的认证模式。
0x8b’ 001000	Channel for SoftAP mode.	SoftAP 模式的通道数量。
0x9b’ 001001	Username.	使用企业级加密时，Client 端的用户名。
0xab’ 001010	CA certification.	进行企业级加密时使用的 CA 证书。
0xbb’ 001011	Client certification.	进行企业级加密时，Client 端的证书。 可包含或不包含私钥，由证书内容决定。
0xcb’ 001100	Server certification.	进行企业级加密时，Server 端的证书。 可包含或不包含私钥，由证书内容决定。
0xdb’ 001101	Client private key.	进行企业级加密时，Client 端的私钥。
0xeb’ 001110	Server private key.	进行企业级加密时，Server 端的私钥。
0xf b’ 001111	Wi-Fi connection state report.	通知手机 ESP32 的 Wi-Fi 状态，包括 STA 状态和 SoftAP 状态，用于手机配置 S

数据帧	含义	解释
		但收到手机询问 Wi-Fi 状态时，除了回复此帧外，还可回复其他数据帧。
0x10 b’ 010000	Version.	
0x11 B’ 010001	Wi-Fi list.	通知手机 ESP32 周围的 Wi-Fi 热点列表。
0x12 B’ 010010	Report error.	通知手机 BluFi 过程出现异常错误。
0x13 B’ 010011	Custom data.	用户发送或者接收自定义数据。

2. Frame Control

   帧控制域，占 1 byte，每个 bit 表示不同含义。

位	含义
0x01	表示帧是否加密。
	1 表示加密，0 表示未加密。
	加密部分帧括完整的 DATA 域加密之前的明文（不帧含末尾的校验）。
	控制帧暂不加密，故控制帧此位为 0。
0x02	表示帧 Data 域结尾是否帧含校验（例如 SHA1,MD5,CRC 等）需要校验的数据域包括 sequcne + data length + 明文 data。
	控制帧和数据帧都可以包含校验位或不包含。
0x04	表示数据方向。
	0 表示手机发向 ESP32；
	1 表示 ESP32 发向手机。
0x08	表示是否要求对方回复 ack。
	0 表示不要求；
	1 表示要求回复 ack。
0x10	表示是否有后续的数据分片。
	0 表示此帧没有后续数据分片；
	1 表示还有后续数据分片，用来传输较长的数据。
	如果是 Frag 帧，则告知当前 content 部分 + 后续 content 部分的总长度，位于 Data 域的前 2 字节 (即最大支持 64K 的 content 数据)。
0x10~0x80 保留	

3. Sequence Control

   序列控制域。帧发送时，无论帧的类型是什么，序列 (Sequence) 都会自动加 1，用来防止重放攻击 (Replay Attack)。每次重现连接后，序列清零。

4. Length

   Data 域的长度，不包含 CheckSum。

5. Data

   不同的 Type 或 Subtype，Data 域的含义均不同。请参考上方表格。

6. CheckSum

   此域为 2 byte 的校验，用来校验『序列 + 数据长度 + 明文数据』。

5.26.6 ESP32 端的安全实现

1. 保证数据安全

   为了保证 Wi-Fi SSID 和密码的传输过程是安全的，需要使用对称加密算法（例如 AES、DES 等）对报文进行加密。在使用对称加密算法之前，需要使用非对称加密算法（DH、RSA、ECC 等）协商出

（或生成出）一个共享密钥。

2. 保证数据完整性

   保证数据完整性，需要加入校验算法（例如 SHA1、MD5、CRC 等）。

3. 身份安全（签名）

   某些算法如 RSA 可以保证身份安全。有些算法如 DH，本身不能保证身份安全，需要添加其他算法来签名。

4. 防止重放攻击 (Replay Attack)

   加入帧发送序列（Sequence），并且序列参与数据校验。

   在 ESP32 端的代码中，你可以决定和开发密钥协商等安全处理的流程参考上述流程图）。手机应用向 ESP32 发送协商数据，将传送给应用层处理。如果应用层不处理，可使用 BluFi 提供的 DH 加密算法来磋商密钥。应用层需向 BluFi 注册以下几个与安全相关的函数：

```
typedef void (*esp_blufi_negotiate_data_handler_t)(uint8_t *data, int len, uint8_t␣
↪**output_data, int *output_len, bool *need_free);
```

该函数用来接收协商期间的正常数据 (normal data)，处理完成后，需要将待发送的数据使用 output_data 和 output_len 传出。

BluFi 会在调用完 negotiate_data_handler 后，发送 negotiate_data_handler 传出的 output_data。

这里的两个『*』，因为需要发出去的数据长度未知，所以需要函数自行分配 (malloc) 或者指向全局变量，通过 need_free 通知是否需要释放内存。

```
typedef int (* esp_blufi_encrypt_func_t)(uint8_t iv8, uint8_t *crypt_data, int crypt_
↪len);
```

加密和解密的数据长度必须一致。其中 iv8 为帧的 8 bit 序列 (sequence)，可作为 iv 的某 8 bit 来使用。

```
typedef int (* esp_blufi_decrypt_func_t)(uint8_t iv8, uint8_t *crypt_data, int crypt_
↪len);
```

加密和解密的数据长度必须一致。其中 iv8 为帧的 8 bit 序列 (sequence)，可作为 iv 的某 8 bit 来使用。

```
typedef uint16_t (*esp_blufi_checksum_func_t)(uint8_t iv8, uint8_t *data, int len);
```

该函数用来计算 CheckSum，返回值为 CheckSum 的值。BluFi 会使用该函数返回值与包末尾的 CheckSum 做比较。

5.26.7 GATT 相关说明

UUID

BluFi Service UUID：0xFFFF，16 bit

BluFi （手机 -> ESP32）特性：0xFF01，主要权限：可写

BluFi （ESP32 -> 手机）特性：0xFF02，主要权限：可读可通知

注解:

1. 目前 Ack 机制已经在该 Profile 协议中定义，但是还没有代码实现。
2. 其他部分均已实现。

5.27 Support for external RAM

5.27.1 Introduction

The ESP32 has a few hundred KiB of internal RAM, residing on the same die as the rest of the ESP32. For some purposes, this is insufficient, and therefore the ESP32 incorporates the ability to also use up to 4MiB of external SPI RAM memory as memory. The external memory is incorporated in the memory map and is, within certain restrictions, usable in the same way internal data RAM is.

5.27.2 Hardware

The ESP32 supports SPI (P)SRAM connected in parallel with the SPI flash chip. While the ESP32 is capable of supporting several types of RAM chips, the ESP32 SDK at the moment only supports the ESP-PSRAM32 chip.

The ESP-PSRAM32 chip is an 1.8V device, and can only be used in parallel with an 1.8V flash part. Make sure to either set the MTDI pin to a high signal level on bootup, or program the fuses in the ESP32 to always use a VDD_SIO level of 1.8V. Not doing this risks damaging the PSRAM and/or flash chip.

To connect the ESP-PSRAM chip to the ESP32D0W*, connect the following signals:

- PSRAM /CE (pin 1) - ESP32 GPIO 16
- PSRAM SO (pin 2) - flash DO
- PSRAM SIO[2] (pin 3) - flash WP
- PSRAM SI (pin 5) - flash DI
- PSRAM SCLK (pin 6) - ESP32 GPIO 17
- PSRAM SIO[3] (pin 7) - flash HOLD

- PSRAM Vcc (pin 8) - ESP32 VCC_SDIO

Connections for the ESP32D2W* chips are TBD.

注解: Espressif sells an ESP-WROVER module which contains an ESP32, 1.8V flash and the ESP-PSRAM32 integrated in a module, ready for inclusion on an end product PCB.

5.27.3 Configuring External RAM

ESP-IDF fully supports using external memory in applications. ESP-IDF can be configured to handle external RAM in several ways after it is initialized at startup:

- *Integrate RAM into ESP32 memory map*
- *Add external RAM to the capability allocator*
- *Provide external RAM via malloc()* (default)
- *Allow .bss segment placed in external memory*

Integrate RAM into ESP32 memory map

Select this option by choosing "Integrate RAM into ESP32 memory map" from *CONFIG_SPIRAM_USE*.

This is the most basic option for external SPIRAM integration. Most users will want one of the other, more advanced, options.

During ESP-IDF startup, external RAM is mapped into the data address space starting at at address 0x3F800000 (byte-accessible). The length of this region is the same as the SPIRAM size (up to the limit of 4MiB).

The application can manually place data in external memory by creating pointers to this region. The application is responsible for all management of the external SPIRAM: coordinating buffer usage, preventing corruption, etc.

Add external RAM to the capability allocator

Select this option by choosing "Make RAM allocatable using heap_caps_malloc(…, MALLOC_CAP_SPIRAM)" from *CONFIG_SPIRAM_USE*.

When enabled, memory is mapped to address 0x3F800000 but also added to the *capabilities-based heap memory allocator* using `MALLOC_CAP_SPIRAM`.

To allocate memory from external RAM, a program should call `heap_caps_malloc(size, MALLOC_CAP_SPIRAM)`. After use, this memory can be freed by calling the normal `free()` function.

Provide external RAM via malloc()

Select this option by choosing "Make RAM allocatable using malloc() as well" from *CONFIG_SPIRAM_USE*. This is the default selection.

Using this option, memory is added to the capability allocator as described for the previous option. However it is also added to the pool of RAM that can be returned by standard `malloc()`.

This allows any application to use the external RAM without having to rewrite the code to use `heap_caps_malloc(..., MALLOC_CAP_SPIRAM)`.

An additional configuration item, *CONFIG_SPIRAM_MALLOC_ALWAYSINTERNAL*, can be used to set the size threshold when a single allocation should prefer external memory:

- When allocating a size less than the threshold, the allocator will try internal memory first.
- When allocating a size equal to or larger than the threshold, the allocator will try external memory first.

If a suitable block of preferred internal/external memory is not available, allocation will try the other type of memory.

Because some buffers can only be allocated in internal memory, a second configuration item *CONFIG_SPIRAM_MALLOC_RESERVE_INTERNAL* defines a pool of internal memory which is reserved for *only* explicitly internal allocations (such as memory for DMA use). Regular `malloc()` will not allocate from this pool. The *MALLOC_CAP_DMA* and `MALLOC_CAP_INTERNAL` flags can be used to allocate memory from this pool.

Allow .bss segment placed in external memory

Enable this option by setting *CONFIG_SPIRAM_ALLOW_BSS_SEG_EXTERNAL_MEMORY*. This configuration setting is independent of the other three.

If enabled, a region of the address space starting from 0x3F800000 will be to used to store zero initialized data (BSS segment) from the lwip, net80211, libpp and bluedroid ESP-IDF libraries.

Additional data can be moved from the internal BSS segment to external RAM by applying the `EXT_RAM_ATTR` macro to any static declaration (which is not initialized to a non-zero value).

This option reduces the internal static memory used by the BSS segment.

Remaining external RAM can also be added to the capability heap allocator, by the method shown above.

5.27.4 Restrictions

External RAM use has the following restrictions:

- When flash cache is disabled (for example, because the flash is being written to), the external RAM also becomes inaccessible; any reads from or writes to it will lead to an illegal cache access exception.

This is also the reason that ESP-IDF does not by default allocate any task stacks in external RAM (see below).

- External RAM cannot be used as a place to store DMA transaction descriptors or as a buffer for a DMA transfer to read from or write into. Any buffers that will be used in combination with DMA must be allocated using `heap_caps_malloc(size, MALLOC_CAP_DMA)` (and can be freed using a standard `free()` call.)
- External RAM uses the same cache region as the external flash. This means that often accessed variables in external RAM can be read and modified almost as quickly as in internal ram. However, when accessing large chunks of data (>32K), the cache can be insufficient and speeds will fall back to the access speed of the external RAM. Moreover, accessing large chunks of data can 'push out' cached flash, possibly making execution of code afterwards slower.
- External RAM cannot be used as task stack memory. Because of this, *xTaskCreate()* and similar functions will always allocate internal memory for stack and task TCBs and functions like *xTaskCreateStatic()* will check if the buffers passed are internal. However, for tasks not calling on code in ROM in any way, directly or indirectly, the menuconfig option *CONFIG_SPIRAM_ALLOW_STACK_EXTERNAL_MEMORY* will eliminate the check in xTaskCreateStatic, allowing a task's stack to be in external RAM. Using this is not advised, however.
- By default, failure to initialize external RAM will cause ESP-IDF startup to abort. This can be disabled by enabling config item *CONFIG_SPIRAM_IGNORE_NOTFOUND*. If *CONFIG_SPIRAM_ALLOW_BSS_SEG_EXTERNAL_MEMORY* is enabled, the option to ignore failure is not available as the linker will have assigned symbols to external memory addresses at link time.
- When used at 80MHz clock speed, external RAM must also occupy either the HSPI or VSPI bus. Select which SPI host will be used by *CONFIG_SPIRAM_OCCUPY_SPI_HOST*.

5.27.5 Chip revisions

There are some issues with certain revisions of the ESP32 that have repercussions for use with external RAM. These are documented in the ESP32 ECO document. In particular, ESP-IDF handles the bugs mentioned in the following ways:

ESP32 rev v0

ESP-IDF has no workaround for the bugs in this revision of silicon, and it cannot be used to map external PSRAM into the ESP32s main memory map.

ESP32 rev v1

The bugs in this silicon revision introduce a hazard when certain sequences of machine instructions operate on external memory locations (ESP32 ECO 3.2). To work around this, the gcc compiler to compile ESP-IDF has been expanded with a flag: `-mfix-esp32-psram-cache-issue`. With this flag passed to gcc on the command line, the compiler works around these sequences and only outputs code that can safely be executed.

In ESP-IDF, this flag is enabled when you select *CONFIG_SPIRAM_CACHE_WORKAROUND*. ESP-IDF also takes other measures to make sure no combination of PSRAM access plus the offending instruction sets are used: it links to a version of Newlib recompiled with the gcc flag, doesn't use some ROM functions and allocates static memory for the WiFi stack.

5.28 链接脚本生成机制

[English]

5.28.1 概述

ESP32 的代码和数据可以存放在多个内存区域。通常，代码和只读数据存放在 flash 区域，可写数据存放在内存中。我们经常需要更改代码或者数据的默认映射区域，例如为了提高性能，将关键部分的代码和只读数据放置到内存中，或者将代码、数据和只读数据存放到 RTC 内存中以便在唤醒桩 和*ULP 协处理器* 中使用。

IDF 的链接脚本生成机制允许用户在组件级别定义代码和数据的存放区域。组件通过链接片段文件 描述如何映射目标文件的输入段（甚至可以是某个具体的函数或者数据）。在构建应用程序时，链接片段文件会被收集、解析并处理，然后扩充到链接脚本模板 中形成最终的链接脚本文件，该链接脚本会被用于链接最终的二进制应用程序。

5.28.2 快速上手

本节将指导如何快速将代码和数据放入 RAM 和 RTC 内存中，并演示如何使这些放置规则依赖于项目的配置。本节内容重在指导快速入门，因此并未在使用前详细介绍所有涉及的术语和概念，但在首次提及此类术语或概念时，均提供了相应链接，以帮助您的理解。

准备工作

Make

在组件目录中新建一个链接片段文件，该文件是一个扩展名为 `.lf` 的文本文件。为了能够让构建系统收集到此片段文件，需要为组件添加一个条目，在调用 `register_component` 之前设置 `COMPONENT_ADD_LDFRAGMENTS` 变量的值，使其指向刚才的链接片段文件。

```
# 文件路径相对于组件的 Makefile
COMPONENT_ADD_LDFRAGMENTS += "path/to/linker_fragment_file.lf" "path/to/another_linker_
↪fragment_file.lf"
```

CMake

对于 CMake 构建系统来说，需要在调用 register_component 之前设置 COMPONENT_ADD_LDFRAGMENTS 变量的值，使其指向链接片段文件。

```
# 文件路径相对于组件的 CMakeLists.txt
set(COMPONENT_ADD_LDFRAGMENTS "path/to/linker_fragment_file.lf" "path/to/another_linker_
↪fragment_file.lf")

register_component()
```

也可以使用函数 ldgen_add_fragment_files 在项目的 CMakeLists.txt 文件或者组件的 project_include.cmake 文件中指定该片段文件

```
ldgen_add_fragment_files(target files ...)
```

指定放置区域

链接脚本生成机制允许指定以下条目的存放位置：

- 组件中的一个或多个目标文件
- 一个或多个函数/变量（使用它们的名字来指定）
- 整个组件库

在继续讲解之前，假设我们的组件包含以下内容：

- 一个名为 component 的组件，在构建期间被归档为 libcomponent.a 库文件
- 该库中有三个存档的目标文件：object1.o，object2.o 和 object3.o
- object1.o 中定义了 function1 函数，object2.o 中定义了 function2 函数
- 在其中的一个 IDF KConfig 文件中存在 PERFORMANCE_MODE 和 PERFORMANCE_LEVEL 两个配置，相应地，项目的 sdkconfig 文件会通过 CONFIG_PERFORMANCE_MODE 和 CONFIG_PERFORMANCE_LEVEL 这两个宏来指示当前设置的值

在新建的链接片段文件中输入以下内容：

```
[mapping]
archive: libcomponent.a
entries:
```

这会创建一个空的*mapping 片段*，它并不会执行任何操作。在链接期间，会使用默认的存放规则 来映射 libcomponent.a，除非填充了 entries 字段。

放置目标文件

假设整个 object1.o 目标文件对性能至关重要，所以最好把它放在 RAM 中。另一方面，假设 "object2.o" 目标文件包含有从深度睡眠唤醒所需的数据，因此需要将它存放到 RTC 内存中。可以在链接片段文件中写入以下内容：

```
[mapping]
archive: libcomponent.a
entries:
    object1 (noflash)      # 将所有代码和只读数据放置在 IRAM 和 DRAM 中
    object2 (rtc)          # 将所有代码、数据和只读数据放置到 RTC 快速内存和 RTC 慢速内存中
```

那么 object3.o 放在哪里呢？由于未指定放置规则，它会被存放到默认区域。

放置函数和数据

假设在 object1.o 目标文件中只有 function1 是与性能密切相关，且在 object2.o 目标文件中只有 function2 需要在深度睡眠唤醒后执行。可以在链接片段文件中写入以下内容：

```
[mapping]
archive: libcomponent.a
entries:
    object1:function1 (noflash)
    object2:function2 (rtc)
```

object1.o 和 object2.o 的剩余函数以及整个 object3.o 目标文件会被存放到默认区域。指定数据存放区域的方法很类似，仅需将 : 之后的函数名，替换为变量名即可。

警告： 使用符号名来指定放置区域有一定的局限。因此，您也可以将相关代码和数据集中在源文件中，然后根据使用目标文件的放置规则 进行放置。

放置整个组件

在这个例子中，假设我们需要将整个组件存放到 RAM 中，可以这样写：

```
[mapping]
archive: libcomponent.a
entries:
    * (noflash)
```

类似的，下面的写法可以将整个组件存放到 RTC 内存中：

```
[mapping]
archive: libcomponent.a
entries:
    * (rtc)
```

依赖于具体配置的存放方式

假设只有当 sdkconfig 文件中存在 `CONFIG_PERFORMANCE_MODE == y` 时，整个组件才会被放置到指定区域，可以这样写：

```
[mapping]
archive: libcomponent.a
entries:
    : PERFORMANCE_MODE = y
    * (noflash)
```

其含义可以通过如下伪代码来表述：

```
if PERFORMANCE_MODE = y
    place entire libcomponent.a in RAM
else
    use default placements
```

此外，您还可以设置多个判断条件。假设有如下需求：当 `CONFIG_PERFORMANCE_LEVEL == 1` 时，只有 `object1.o` 存放到 RAM 中；当 `CONFIG_PERFORMANCE_LEVEL == 2` 时，`object1.o` 和 `object2.o` 会被存放到 RAM 中；当 `CONFIG_PERFORMANCE_LEVEL == 3` 时，归档中的所有目标文件都会被存放到 RAM 中；当这三个条件都不满足时，将整个组件库存放到 RTC 内存中。虽然这种使用场景很罕见，不过，还是可以通过以下方式实现：

```
[mapping]
archive: libcomponent.a
```

(下页继续)

(续上页)

```
entries:
    : PERFORMANCE_LEVEL = 3
    * (noflash)
    : PERFORMANCE_LEVEL = 2
    object1 (noflash)
    object2 (noflash)
    : PERFORMANCE_LEVEL = 1
    object1 (noflash)
    : default
    * (rtc)
```

用伪代码可以表述为：

```
if CONFIG_PERFORMANCE_LEVEL == 3
    place entire libcomponent.a in RAM
else if CONFIG_PERFORMANCE_LEVEL == 2
    only place object1.o and object2.o in RAM
else if CONFIG_PERFORMANCE_LEVEL == 1
    only place object1.o in RAM
else
    place entire libcomponent.a in RTC memory
```

条件测试还支持其他操作。

默认的存放规则

到目前为止，“默认存放规则”一直作为未指定 `rtc` 和 `noflash` 存放规则时的备选放置方式。`noflash` 或者 `rtc` 标记不仅仅是链接脚本生成机制中的关键字，实际上还是由用户指定且被称为*scheme 片段* 的对象。由于这些存放规则非常常用，所以 IDF 中已经预定义了这些规则。

类似地，还有一个名为 `default` 的 scheme 片段，它定义了默认的存放规则，详情请见默认 *scheme*。

注解： 有关使用此功能的 IDF 组件的示例，请参阅 freertos/CMakeLists.txt。为了提高性能，`freertos` 组件通过该机制将所有目标文件中的代码、字面量和只读数据存放到 IRAM 中。

快速入门指南到此结束，下面的文章将进一步详细讨论这个机制，例如它的组件、基本概念、语法、如何集成到构建系统中等等。以下部分有助于创建自定义的映射或者修改默认行为。

5.28.3 组件

链接片段文件

“链接片段文件”包含称为“片段”的对象，每个片段含有多条信息，放在一起时即可形成寻访规则，共同描述目标文件各个段在二进制输出文件中的存放位置。

换言之，处理“链接片段文件”也就是在 GNU LD 的 `SECTIONS` 命令中，创建段的存放规则，并将其放在一个内部 `target` token 中。

下面讨论三种类型的片段。

注解： 片段具有名称属性（mapping 片段除外）并且是全局可见的。片段的命名遵循 C 语言的基本变量命名规则，即区分大小写；必须以字母或者下划线开头；允许非初始字符使用字母、数字和下划线；不能使用空格等特殊字符。此外，每种片段都有自己的独立命名空间，如果多个片段的类型和名称相同，就会引发异常。

I. sections 片段

sections 片段定义了 GCC 编译器输出的目标文件段的列表，可以是默认的段（比如 `.text` 段、`.data` 段），也可以是用户通过 `__attribute__` 关键字自定义的段。

此外，用户还可以在某类段后增加一个 `+`，表示囊括列表中的“所有这类段”和“所有以这类段开头的段”。相较于显式地罗列所有的段，我们更推荐使用这种方式。

语法

```
[sections:name]
entries:
    .section+
    .section
    ...
```

示例

```
# 不推荐的方式
[sections:text]
entries:
    .text
    .text.*
    .literal
    .literal.*

# 推荐的方式，效果与上面等同
```

(下页继续)

(续上页)

```
[sections:text]
entries:
    .text+              # 即 .text 和 .text.*
    .literal+           # 即 .literal 和 .literal.*
```

II. scheme 片段

scheme 片段定义了为每个 sections 指定的 `target`。

语法

```
[scheme:name]
entries:
    sections -> target
    sections -> target
    ...
```

示例

```
[scheme:noflash]
entries:
    text -> iram0_text          # 名为 text 的 sections 片段下的所有条目均归入 iram0_text
    rodata -> dram0_data        # 名为 rodata 的 sections 片段下的所有条目均归入 dram0_
↪data
```

default scheme

注意，有一个名为 `default` 的 scheme 很特殊，特殊在于 catch-all 存放规则都是从这个 scheme 中的条目生成的。这意味着，如果该 scheme 有一条 `text -> flash_text` 条目，则将为目标 `flash_text` 生成如下的存放规则:

```
*(.literal .literal.* .text .text.*)
```

此后，这些生成的 catch-all 规则将用于未指定映射规则的情况。

注解: `default` scheme 是在 esp32/ld/esp32_fragments.lf 文件中定义的，此外，快速上手指南中提到的内置 `noflash` scheme 片段和 `rtc` scheme 片段也是在这个文件中定义的。

III. mapping 片段

mapping 片段定义了可映射实体（即目标文件、函数名、变量名）对应的 scheme 片段。具体来说，mapping 片段有两种类型的条目，分别为映射条目和条件条目。

注解： mapping 片段没有具体的名称属性，内部会根据归档条目的值构造其名称。

语法

```
[mapping]
archive: archive                # 构建后输出的存档文件的名称（即 libxxx.a）
entries:
    : condition                 # 条件条目，非默认
    object:symbol (scheme)      # 映射条目，Type I
    object (scheme)             # 映射条目，Type II
    * (scheme)                  # 映射条目，Type III

    # 为了提高可读性，可以适当增加分隔行或注释，非必须

    : default                   # 条件条目，默认
    * (scheme)                  # 映射条目，Type III
```

映射条目

mapping 片段的映射条目共有三种类型，分别为：

`Type I` 同时指定了目标文件名和符号名。其中，符号名可以是函数名或者变量名。

`Type II` 仅指定了目标文件名。

`Type III` 指定了 `*`，也就是指定了归档文件中所有目标文件。

接下来，让我们通过展开一个 `Type II` 映射条目，更好地理解映射条目的含义。最初：

```
object (scheme)
```

接着，让我们根据条目定义，将这个 scheme 片段展开：

```
object (sections -> target,
        sections -> target,
        ...)
```

然后再根据条目定义，将这个 sections 片段展开：

```
object (.section,
        .section,
        ... -> target, # 根据目标文件将这里所列出的所有段放在该目标位置

        .section,
        .section,
        ... -> target, # 同样的方法指定其他段

        ...)           # 直至所有段均已展开
```

有关 Type I 映射条目的局限性

Type I 映射条目可以工作的大前提是编译器必须支持 -ffunction-sections 和 -ffdata-sections 选项。因此，如果用户主动禁用了这两个选项，Type I 映射条目就无法工作。此外，值得注意的是，Type I 映射条目的实现还与输出段有关。因此，有时及时用户在编译时没有选择禁用这两个选项，也有可能无法使用 Type I 映射条目。

例如，当使用 -ffunction-sections 选项时，编译器会给每个函数都输出一个单独的段，根据段名的构造规则，这些段的名称应该类似 .text.{func_name} 或 .literal.{func_name}。然而，对于函数中的字符串文字，情况并非如此，因为它们会使用池化后或者新创建的段名。

当使用 -fdata-sections 选项时，编译器会给每一个全局可见的数据输出一个单独的段，名字类似于 .data.{var_name}、.rodata.{var_name} 或者 .bss.{var_name}。这种情况下，Type I 映射条目可以使用。然而，对于在函数作用域中声明的静态数据，编译器在为其生成段名时会同时使用其变量名和其他信息，因此当涉及在函数作用域中定义的静态数据时就会出现问题。

条件条目

条件条目允许根据具体项目配置生成不同的链接脚本。也就是说，可以根据一些配置表达式的值，选择使用一套不同的映射条目。由于检查配置的过程是通过 tools/kconfig_new/kconfiglib.py 文件中的 eval_string 完成的，因此条件表达式也必须遵循 eval_string 的语法和限制。

在一个 mapping 片段中，跟着一个条件条目后定义的所有映射条目均属于该条件条目，直至下一个条件条目的出现或者是该 mapping 片段的结束。在检查配置时，编译器将逐条检查这个 mapping 片段中的所有条件条目，直至找到一个满足条件的条件条目（即表达式为 TRUE），然后使用该条件条目下定义的映射条目。另外，尽管每个映射都已包含一个隐式的空映射，但用户还是可以自定义一个默认条件，即所有条件条目均不满足时（即没有表达式为 TRUE）使用的映射条目。

示例

```
[scheme:noflash]
entries:
    text -> iram0_text
    rodata -> dram0_data
```

(下页继续)

(续上页)

```
[mapping:lwip]
archive: liblwip.a
entries:
    : LWIP_IRAM_OPTIMIZATION = y          # 如果 CONFIG_LWIP_IRAM_OPTIMIZATION 在␣
↪sdkconfig 中被定义为 'y'
    ip4:ip4_route_src_hook (noflash)      # 将 ip4.o:ip4_route_src_hook, ip4.o:ip4_route_
↪src 和
    ip4:ip4_route_src (noflash)           # ip4.o:ip4_route 映射到 noflash scheme
    ip4:ip4_route (noflash)               # 该 scheme 会将他们存放到 RAM 中

    : default                             # 否则不使用特殊的映射规则
```

链接脚本模板

链接脚本模板与其他链接脚本没有本质区别，但带有特定的标记语法，可以指示放置生成的存放规则的位置，是指定存放规则的放置位置的框架。

语法

如需引用一个 `target` token 下的所有存放规则，请使用以下语法：

```
mapping[target]
```

示例

以下示例是某个链接脚本模板的摘录。该链接脚定义了一个输出段 `.iram0.text`，里面包含一个引用目标 `iram0_text` 的标记。

```
.iram0.text :
{
    /* 标记 IRAM 的边界 */
    _iram_text_start = ABSOLUTE(.);

    /* 引用 iram0_text */
    mapping[iram0_text]

    _iram_text_end = ABSOLUTE(.);
} > iram0_0_seg
```

下面，让我们更具体一点。假设某个链接脚本生成器收集到了以下片段：

```
[sections:text]
    .text+
    .literal+

[sections:iram]
    .iram1+

[scheme:default]
entries:
    text -> flash_text
    iram -> iram0_text

[scheme:noflash]
entries:
    text -> iram0_text

[mapping:freertos]
archive: libfreertos.a
entries:
    * (noflash)
```

则该脚本生成器生成的链接脚本文件，其摘录应如下所示：

```
.iram0.text :
{
    /* 标记 IRAM 的边界 */
    _iram_text_start = ABSOLUTE(.);

    /* 将链接片段处理生成的存放规则放置在模板标记的位置处 */
    *(.iram1 .iram1.*)
    *libfreertos.a:(.literal .text .literal.* .text.*)

    _iram_text_end = ABSOLUTE(.);
} > iram0_0_seg
```

`*libfreertos.a:(.literal .text .literal.* .text.*)`

> 这是从 `freertos` mapping 片段的 `* (noflash)` 条目中生成的规则。`libfreertos.a` 归档文件下的所有目标文件的 `text` 段会被收集到 `iram0_text` 目标下（假设采用 `noflash` scheme），并放在模板中被 `iram0_text` 标记的地方。

`*(.iram1 .iram1.*)`

这是从 default scheme 的 iram -> iram0_text 条目生成的规则，因为 default scheme 指定了一个 iram -> iram0_text 条目，因此生成的规则也将放在被 iram0_text 标记的地方。值得注意的是，由于该规则是从 default scheme 中生成的，因此在同一目标下收集的所有规则下排在第一位。

5.28.4 与构建系统的集成

链接脚本是在应用程序的构建过程中生成的，此时尚未链接形成最终的二进制文件。实现该机制的工具位于 $(IDF_PATH)/tools/ldgen 目录下。

链接脚本模板

目前使用的链接脚本模板是 esp32/ld/esp32.project.ld.in，仅用于应用程序的构建，生成的链接脚本文件将放在同一组件的构建目录下。值得注意的是，修改此链接描述文件模板会触发应用程序的二进制文件的重新链接。

链接片段文件

任何组件都可以将片段文件添加到构建系统中，方法有两种：设置 COMPONENT_ADD_LDFRAGMENTS 变量或者使用 ldgen_add_fragment_files 函数（仅限 CMake），具体可以参考添加片段文件 小节中的介绍。值得注意的是，修改构建系统中的任何片段文件都会触发应用程序的二进制文件的重新链接。

CHAPTER 6

Contributions Guide

We welcome contributions to the esp-idf project!

6.1 How to Contribute

Contributions to esp-idf - fixing bugs, adding features, adding documentation - are welcome. We accept contributions via Github Pull Requests.

6.2 Before Contributing

Before sending us a Pull Request, please consider this list of points:

- Is the contribution entirely your own work, or already licensed under an Apache License 2.0 compatible Open Source License? If not then we unfortunately cannot accept it.
- Does any new code conform to the esp-idf *Style Guide*?
- Does the code documentation follow requirements in *Documenting Code*?
- Is the code adequately commented for people to understand how it is structured?
- Is there documentation or examples that go with code contributions? There are additional suggestions for writing good examples in examples readme.
- Are comments and documentation written in clear English, with no spelling or grammar errors?
- Example contributions are also welcome. Please check the 创建示例项目 guide for these.

- If the contribution contains multiple commits, are they grouped together into logical changes (one major change per pull request)? Are any commits with names like "fixed typo" squashed into previous commits?
- If you' re unsure about any of these points, please open the Pull Request anyhow and then ask us for feedback.

6.3 Pull Request Process

After you open the Pull Request, there will probably be some discussion in the comments field of the request itself.

Once the Pull Request is ready to merge, it will first be merged into our internal git system for in-house automated testing.

If this process passes, it will be merged onto the public github repository.

6.4 Legal Part

Before a contribution can be accepted, you will need to sign our *Contributor Agreement*. You will be prompted for this automatically as part of the Pull Request process.

6.5 Related Documents

6.5.1 Espressif IoT Development Framework Style Guide

About this guide

Purpose of this style guide is to encourage use of common coding practices within the ESP-IDF.

Style guide is a set of rules which are aimed to help create readable, maintainable, and robust code. By writing code which looks the same way across the code base we help others read and comprehend the code. By using same conventions for spaces and newlines we reduce chances that future changes will produce huge unreadable diffs. By following common patterns for module structure and by using language features consistently we help others understand code behavior.

We try to keep rules simple enough, which means that they can not cover all potential cases. In some cases one has to bend these simple rules to achieve readability, maintainability, or robustness.

When doing modifications to third-party code used in ESP-IDF, follow the way that particular project is written. That will help propose useful changes for merging into upstream project.

C code formatting

Indentation

Use 4 spaces for each indentation level. Don't use tabs for indentation. Configure the editor to emit 4 spaces each time you press tab key.

Vertical space

Place one empty line between functions. Don't begin or end a function with an empty line.

```
void function1()
{
    do_one_thing();
    do_another_thing();
                                // INCORRECT, don't place empty line here
}
                                // place empty line here
void function2()
{
                                // INCORRECT, don't use an empty line here
    int var = 0;
    while (var < SOME_CONSTANT) {
        do_stuff(&var);
    }
}
```

Horizontal space

Always add single space after conditional and loop keywords:

```
if (condition) {    // correct
    // ...
}

switch (n) {        // correct
    case 0:
        // ...
}
```

(下页继续)

(续上页)

```
for(int i = 0; i < CONST; ++i) {    // INCORRECT
    // ...
}
```

Add single space around binary operators. No space is necessary for unary operators. It is okay to drop space around multiply and divide operators:

```
const int y = y0 + (x - x0) * (y1 - y0) / (x1 - x0);    // correct

const int y = y0 + (x - x0)*(y1 - y0)/(x1 - x0);        // also okay

int y_cur = -y;                                          // correct
++y_cur;

const int y = y0+(x-x0)*(y1-y0)/(x1-x0);                 // INCORRECT
```

No space is necessary around `.` and `->` operators.

Sometimes adding horizontal space within a line can help make code more readable. For example, you can add space to align function arguments:

```
gpio_matrix_in(PIN_CAM_D6,   I2S0I_DATA_IN14_IDX, false);
gpio_matrix_in(PIN_CAM_D7,   I2S0I_DATA_IN15_IDX, false);
gpio_matrix_in(PIN_CAM_HREF, I2S0I_H_ENABLE_IDX,  false);
gpio_matrix_in(PIN_CAM_PCLK, I2S0I_DATA_IN15_IDX, false);
```

Note however that if someone goes to add new line with a longer identifier as first argument (e.g. `PIN_CAM_VSYNC`), it will not fit. So other lines would have to be realigned, adding meaningless changes to the commit.

Therefore, use horizontal alignment sparingly, especially if you expect new lines to be added to the list later.

Never use TAB characters for horizontal alignment.

Never add trailing whitespace at the end of the line.

Braces

- Function definition should have a brace on a separate line:

  ```
  // This is correct:
  void function(int arg)
  {
  ```

(下页继续)

(续上页)

```
}

// NOT like this:
void function(int arg) {

}
```

- Within a function, place opening brace on the same line with conditional and loop statements:

```
if (condition) {
    do_one();
} else if (other_condition) {
    do_two();
}
```

Comments

Use `//` for single line comments. For multi-line comments it is okay to use either `//` on each line or a `/* */` block.

Although not directly related to formatting, here are a few notes about using comments effectively.

- Don't use single comments to disable some functionality:

```
void init_something()
{
    setup_dma();
    // load_resources();                // WHY is this thing commented, asks the␣
↪reader?
    start_timer();
}
```

- If some code is no longer required, remove it completely. If you need it you can always look it up in git history of this file. If you disable some call because of temporary reasons, with an intention to restore it in the future, add explanation on the adjacent line:

```
void init_something()
{
    setup_dma();
    // TODO: we should load resources here, but loader is not fully integrated yet.
```

(下页继续)

(续上页)

```
    // load_resources();
    start_timer();
}
```

- Same goes for `#if 0 ... #endif` blocks. Remove code block completely if it is not used. Otherwise, add comment explaining why the block is disabled. Don't use `#if 0 ... #endif` or comments to store code snippets which you may need in the future.
- Don't add trivial comments about authorship and change date. You can always look up who modified any given line using git. E.g. this comment adds clutter to the code without adding any useful information:

```
void init_something()
{
    setup_dma();
    // XXX add 2016-09-01
    init_dma_list();
    fill_dma_item(0);
    // end XXX add
    start_timer();
}
```

Line Endings

Commits should only contain files with LF (Unix style) endings.

Windows users can configure git to check out CRLF (Windows style) endings locally and commit LF endings by setting the `core.autocrlf` setting. *Github has a document about setting this option <github-line-endings>*. However because MSYS2 uses Unix-style line endings, it is often easier to configure your text editor to use LF (Unix style) endings when editing ESP-IDF source files.

If you accidentally have some commits in your branch that add LF endings, you can convert them to Unix by running this command in an MSYS2 or Unix terminal (change directory to the IDF working directory and check the correct branch is currently checked out, beforehand):

```
git rebase --exec 'git diff-tree --no-commit-id --name-only -r HEAD | xargs dos2unix &&␣
↪git commit -a --amend --no-edit --allow-empty' master
```

(Note that this line rebases on master, change the branch name at the end to rebase on another branch.)

For updating a single commit, it's possible to run `dos2unix FILENAME` and then run `git commit --amend`

Formatting your code

You can use `astyle` program to format your code according to the above recommendations.

If you are writing a file from scratch, or doing a complete rewrite, feel free to re-format the entire file. If you are changing a small portion of file, don' t re-format the code you didn' t change. This will help others when they review your changes.

To re-format a file, run:

```
tools/format.sh components/my_component/file.c
```

CMake Code Style

- Indent with four spaces.
- Maximum line length 120 characters. When splitting lines, try to focus on readability where possible (for example, by pairing up keyword/argument pairs on individual lines).
- Don' t put anything in the optional parentheses after `endforeach()`, `endif()`, etc.
- Use lowercase (`with_underscores`) for command, function, and macro names.
- For locally scoped variables, use lowercase (`with_underscores`).
- For globally scoped variables, use uppercase (`WITH_UNDERSCORES`).
- Otherwise follow the defaults of the cmake-lint project.

Configuring the code style for a project using EditorConfig

EditorConfig helps developers define and maintain consistent coding styles between different editors and IDEs. The EditorConfig project consists of a file format for defining coding styles and a collection of text editor plugins that enable editors to read the file format and adhere to defined styles. EditorConfig files are easily readable and they work nicely with version control systems.

For more information, see EditorConfig Website.

Documenting code

Please see the guide here: *Documenting Code*.

Naming

- Any variable or function which is only used in a single source file should be declared `static`.

- Public names (non-static variables and functions) should be namespaced with a per-component or per-unit prefix, to avoid naming collisions. ie `esp_vfs_register()` or `esp_console_run()`. Starting the prefix with `esp_` for Espressif-specific names is optional, but should be consistent with any other names in the same component.
- Static variables should be prefixed with `s_` for easy identification. For example, `static bool s_invert`.
- Avoid unnecessary abbreviations (ie shortening `data` to `dat`), unless the resulting name would otherwise be very long.

Structure

To be written.

Language features

To be written.

6.5.2 Documenting Code

The purpose of this description is to provide quick summary on documentation style used in espressif/esp-idf repository and how to add new documentation.

Introduction

When documenting code for this repository, please follow Doxygen style. You are doing it by inserting special commands, for instance `@param`, into standard comments blocks, for example:

```
/**
 * @param ratio this is oxygen to air ratio
 */
```

Doxygen is phrasing the code, extracting the commands together with subsequent text, and building documentation out of it.

Typical comment block, that contains documentation of a function, looks like below.

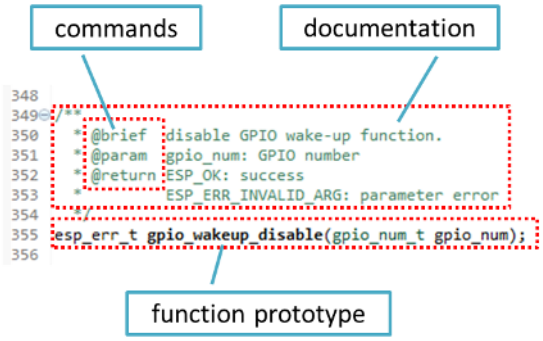


```
348
349 /**
350  * @brief  disable GPIO wake-up function.
351  * @param  gpio_num: GPIO number
352  * @return ESP_OK: success
353  *         ESP_ERR_INVALID_ARG: parameter error
354  */
355 esp_err_t gpio_wakeup_disable(gpio_num_t gpio_num);
356
```

Doxygen supports couple of formatting styles. It also gives you great flexibility on level of details to include in documentation. To get familiar with available features, please check data reach and very well organized Doxygen Manual.

Why we need it?

The ultimate goal is to ensure that all the code is consistently documented, so we can use tools like Sphinx and Breathe to aid preparation and automatic updates of API documentation when the code changes.

With these tools the above piece of code renders like below:

```
348
349 /**
350  * @brief  disable GPIO wake-up function.
351  * @param  gpio_num: GPIO number
352  * @return ESP_OK: success
353  *         ESP_ERR_INVALID_ARG: parameter error
354  */
355 esp_err_t gpio_wakeup_disable(gpio_num_t gpio_num);
356
```

esp_err_t **gpio_wakeup_disable**(gpio_num_t *gpio_num*)

disable GPIO wake-up function.

Return

ESP_OK: success ESP_ERR_INVALID_ARG: parameter error

Parameters

- `gpio_num` - GPIO number

Go for it!

When writing code for this repository, please follow guidelines below.

1. Document all building blocks of code: functions, structs, typedefs, enums, macros, etc. Provide enough information on purpose, functionality and limitations of documented items, as you would like to see them documented when reading the code by others.

2. Documentation of function should describe what this function does. If it accepts input parameters and returns some value, all of them should be explained.

3. Do not add a data type before parameter or any other characters besides spaces. All spaces and line breaks are compressed into a single space. If you like to break a line, then break it twice.

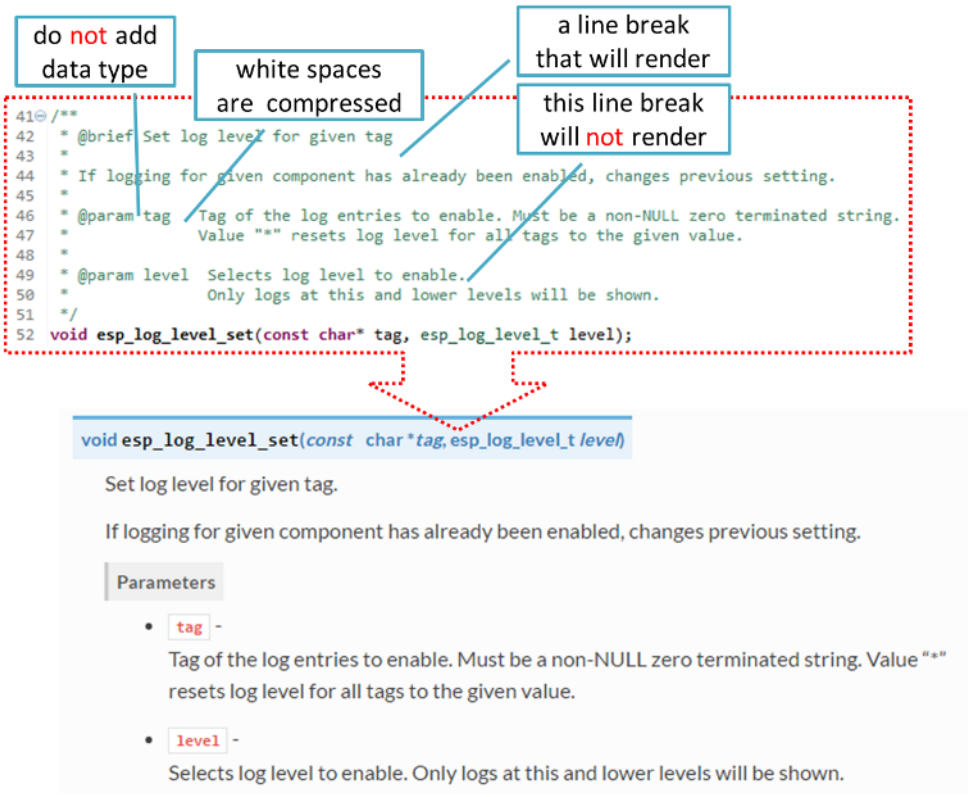

4. If function has void input or does not return any value, then skip `@param` or `@return`

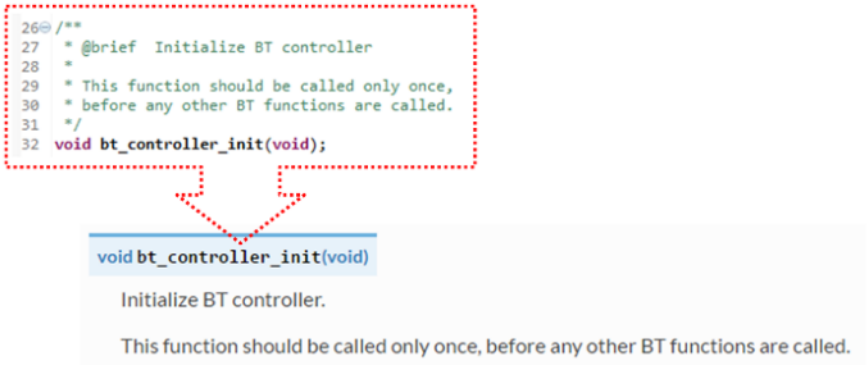

5. When documenting a `define` as well as members of a `struct` or `enum`, place specific comment like below after each member.

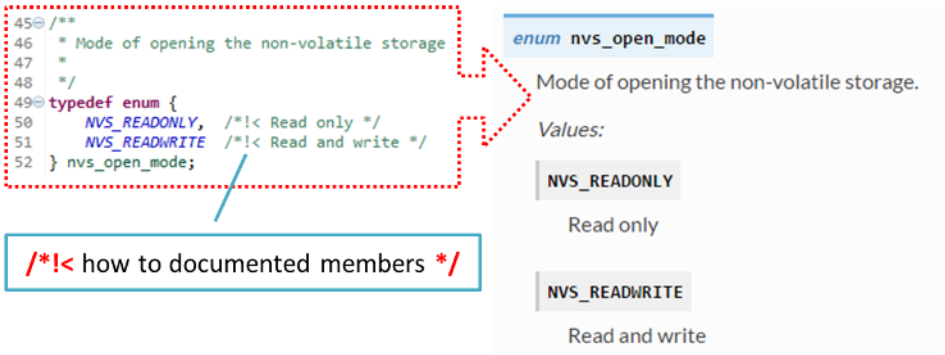

6. To provide well formatted lists, break the line after command (like `@return` in example below).

```
*
* @return
*     - ESP_OK if erase operation was successful
*     - ESP_ERR_NVS_INVALID_HANDLE if handle has been closed or is NULL
*     - ESP_ERR_NVS_READ_ONLY if handle was opened as read only
*     - ESP_ERR_NVS_NOT_FOUND if the requested key doesn't exist
*     - other error codes from the underlying storage driver
*
```

7. Overview of functionality of documented header file, or group of files that make a library, should be placed in the same directory in a separate `README.rst` file. If directory contains header files for different APIs, then the file name should be `apiname-readme.rst`.

Go one extra mile

There is couple of tips, how you can make your documentation even better and more useful to the reader.

1. Add code snippets to illustrate implementation. To do so, enclose snippet using `@code{c}` and `@endcode` commands.

```
*
* @code{c}
* // Example of using nvs_get_i32:
* int32_t max_buffer_size = 4096; // default value
* esp_err_t err = nvs_get_i32(my_handle, "max_buffer_size", &max_buffer_size);
* assert(err == ESP_OK || err == ESP_ERR_NVS_NOT_FOUND);
* // if ESP_ERR_NVS_NOT_FOUND was returned, max_buffer_size will still
* // have its default value.
* @endcode
*
```

The code snippet should be enclosed in a comment block of the function that it illustrates.

2. To highlight some important information use command `@attention` or `@note`.

```
*
* @attention
*     1. This API only impact WIFI_MODE_STA or WIFI_MODE_APSTA mode
*     2. If the ESP32 is connected to an AP, call esp_wifi_disconnect to disconnect.
*
```

Above example also shows how to use a numbered list.

3. To provide common description to a group of similar functions, enclose them using `/**@{*/` and `/**@}*/` markup commands:

```
/**@{*/
/**
 * @brief common description of similar functions
 *
 */
void  first_similar_function (void);
void second_similar_function (void);
/**@}*/
```

For practical example see nvs_flash/include/nvs.h.

4. You may want to go even further and skip some code like e.g. repetitive defines or enumerations. In such case enclose the code within `/** @cond */` and `/** @endcond */` commands. Example of such implementation is provided in driver/include/driver/gpio.h.

5. Use markdown to make your documentation even more readable. You will add headers, links, tables and more.

```
*
* [ESP32 Technical Reference](https://espressif.com/sites/default/files/
↪documentation/esp32_technical_reference_manual_en.pdf)
*
```

注解: Code snippets, notes, links, etc. will not make it to the documentation, if not enclosed in a comment block associated with one of documented objects.

---

6. Prepare one or more complete code examples together with description. Place description in a separate file `README.md` in specific folder of examples directory.

Linking Examples

When linking to examples on GitHub do not use absolute / hadcoded URLs. Instead, use docutils custom roles that will generate links for you. These auto-generated links point to the tree or blob for the git commit ID (or tag) of the repository. This is needed to ensure that links do not get broken when files in master branch are moved around or deleted.

The following roles are provided:

- `:idf:`path`` - points to directory inside ESP-IDF
- `:idf_file:`path`` - points to file inside ESP-IDF
- `:idf_raw:`path`` - points to raw view of the file inside ESP-IDF
- `:component:`path`` - points to directory inside ESP-IDF components dir
- `:component_file:`path`` - points to file inside ESP-IDF components dir
- `:component_raw:`path`` - points to raw view of the file inside ESP-IDF components dir
- `:example:`path`` - points to directory inside ESP-IDF examples dir
- `:example_file:`path`` - points to file inside ESP-IDF examples dir
- `:example_raw:`path`` - points to raw view of the file inside ESP-IDF examples dir

Example implementation:

```
* :example:`get-started/hello_world`
* :example:`Hello World! <get-started/hello_world>`
```

How it renders:

- get-started/hello_world
- Hello World!

A check is added to the CI build script, which searches RST files for presence of hard-coded links (identified by tree/master, blob/master, or raw/master part of the URL). This check can be run manually: `cd docs` and then `make gh-linkcheck`.

Linking Language Versions

Switching between documentation in different languages may be done using `:link_to_translation:` custom role. The role placed on a page of documentation provides a link to the same page in a language specified as a parameter. Examples below show how to enter links to Chinese and English versions of documentation:

```
:link_to_translation:`zh_CN: 中文版 `
:link_to_translation:`en:English`
```

The language is specified using standard abbreviations like `en` or `zh_CN`. The text after last semicolon is not standardized and may be entered depending on the context where the link is placed, e.g.:

```
:link_to_translation:`en:see description in English`
```

Add Illustrations

Consider adding diagrams and pictures to illustrate described concepts.

Sometimes it is better to add an illustration than writing a lengthy paragraph to describe a complex idea, a data structure or an algorithm. This repository is using blockdiag suite of tools to generate diagram images from simple text files.

The following types of diagrams are supported:

- Block diagram
- Sequence diagram
- Activity diagram
- Logical network diagram

With this suite of tools it is possible to generate beautiful diagram images from simple text format (similar to graphviz' s DOT format). The diagram elements are laid out automatically. The diagram code is then converted into ".png" graphics and integrated "behind the scenes" into **Sphinx** documents.

For the diagram preparation you can use an on-line interactive shell that instantly shows the rendered image.

Below are couple of diagram examples:

- Simple **block diagram** / `blockdiag` - Wi-Fi Buffer Configuration
- Slightly more complicated **block diagram** - Wi-Fi programming model
- **Sequence diagram** / `seqdiag` - Scan for a Specific AP in All Channels
- **Packet diagram** / `packetdiag` - NVS Page Structure

Try them out by modifying the source code and see the diagram instantly rendering below.

注解: There may be slight differences in rendering of font used by the interactive shell compared to the font used in the esp-idf documentation.

Put it all together

Once documentation is ready, follow instruction in *API Documentation Template* and create a single file, that will merge all individual pieces of prepared documentation. Finally add a link to this file to respective `.. toctree::` in `index.rst` file located in `/docs` folder or subfolders.

OK, but I am new to Sphinx!

1. No worries. All the software you need is well documented. It is also open source and free. Start by checking Sphinx documentation. If you are not clear how to write using rst markup language, see reStructuredText Primer. You can also use markdown (.md) files, and find out about more about the specific markdown syntax that we use on‘Recommonmark parser’ s documentation page <https://recommonmark.readthedocs.io/en/latest/>‘_.
2. Check the source files of this documentation to understand what is behind of what you see now on the screen. Sources are maintained on GitHub in espressif/esp-idf repository in docs folder. You can go directly to the source file of this page by scrolling up and clicking the link in the top right corner. When on GitHub, see what’ s really inside, open source files by clicking `Raw` button.
3. You will likely want to see how documentation builds and looks like before posting it on the GitHub. There are two options to do so:
   - Install Sphinx, Breathe, Blockdiag and Doxygen to build it locally, see chapter below.
   - Set up an account on Read the Docs and build documentation in the cloud. Read the Docs provides document building and hosting for free and their service works really quick and great.
4. To preview documentation before building, use Sublime Text editor together with OmniMarkupPreviewer plugin.

Setup for building documentation locally

You can setup environment to build documentation locally on your PC by installing:

1. Doxygen - https://www.stack.nl/~dimitri/doxygen/
2. Sphinx - https://github.com/sphinx-doc/sphinx/#readme-for-sphinx
3. Docment theme “sphinx_rtd_theme” - https://github.com/rtfd/sphinx_rtd_theme
4. Breathe - https://github.com/michaeljones/breathe#breathe
5. Blockdiag - http://blockdiag.com/en/index.html
6. Recommonmark - https://github.com/rtfd/recommonmark

The package “sphinx_rtd_theme” is added to have the same “look and feel” of ESP32 Programming Guide documentation like on the “Read the Docs” hosting site.

Do not worry about being confronted with several packages to install. Besides Doxygen, all remaining packages are written in Python. Therefore installation of all of them is combined into one simple step.

Installation of Doxygen is OS dependent:

Linux

```
sudo apt-get install doxygen
```

Windows - install in MSYS2 console

```
pacman -S doxygen
```

MacOS

```
brew install doxygen
```

注解: If you are installing on Windows system (Linux and MacOS users should skip this note), **before** going further, execute two extra steps below. These steps are required to install dependencies of "blockdiag" discussed under *Add Illustrations*.

1. Update all the system packages:

   ```
   $ pacman -Syu
   ```

   This process will likely require restarting of the MSYS2 MINGW32 console and repeating above commands, until update is complete.

2. Install *pillow*, that is one of dependences of the *blockdiag*:

   ```
   $ pacman -S mingw32/mingw-w64-i686-python-pillow
   ```

   Check the log on the screen that `mingw-w64-i686-python-pillow-4.3.0-1` is installed. Previous versions of *pillow* will not work.

A downside of Windows installation is that fonts of the *blockdiag pictures <add-illustrations>* do not render correctly, you will see some random characters instead. Until this issue is fixed, you can use the interactive shell to see how the complete picture looks like.

All remaining applications are Python packages and you can install them in one step as follows:

```
cd ~/esp/esp-idf/docs
pip install --user -r requirements.txt
```

注解: Installation steps assume that ESP-IDF is placed in `~/esp/esp-idf` directory, that is default location of ESP-IDF used in documentation.

Change to directory with files for specific language:

```
cd en
```

Now you should be ready to build documentation by invoking:

```
make html
```

This may take couple of minutes. After completion, documentation will be placed in `~/esp/esp-idf/docs/en/_build/html` folder. To see it, open `index.html` in a web browser.

Wrap up

We love good code that is doing cool things. We love it even better, if it is well documented, so we can quickly make it run and also do the cool things.

Go ahead, contribute your code and documentation!

Related Documents

- *API Documentation Template*
- *Documentation Add-ons and Extensions Reference*

6.5.3 Documentation Add-ons and Extensions Reference

This documentation is created using Sphinx application that renders text source files in reStructuredText (`.rst`) format located in docs directory. For some more details on that process, please refer to section *Documenting Code*.

Besides Sphinx there are several other applications that help to provide nicely formatted and easy to navigate documentation. These applications are listed in section *Setup for building documentation locally* with the installed version numbers provided in file docs/requirements.txt.

On top of that we have created a couple of custom add-ons and extensions to help integrate documentation with underlining ESP-IDF repository and further improve navigation as well as maintenance of documentation.

The purpose of this section is to provide a quick reference to the add-ons and the extensions.

Documentation Folder Structure

- The ESP-IDF repository contains a dedicated documentation folder docs in the root.
- The `docs` folder contains localized documentation in docs/en (English) and docs/zh_CN (simplified Chinese) subfolders.

- Graphics files and fonts common to localized documentation are contained in docs/_static subfolder
- Remaining files in the root of `docs` as well as `docs/en` and `docs/zh_CN` provide configuration and scripts used to automate documentation processing including the add-ons and extensions.
- Several folders and files are generated dynamically during documentations build and placed primarily in `docs/[lang]/_build` folders. These folders are temporary and not visible in ESP-IDF repository,

Add-ons and Extensions Reference

docs/conf_common.py This file contains configuration common to each localized documentation (e.g. English, Chinese). The contents of this file is imported to standard Sphinx configuration file `conf.py` located in respective language folders (e.g. `docs/en`, `docs/zh_CN`) during build for each language.

docs/check_doc_warnings.sh If there are any warnings reported during documentation build, then the build is failed. The warnings should be resolved before merging any documentation updates. This script is doing check for warnings in respective log file to fail the build. See also description of `sphinx-known-warnings.txt` below.

docs/check_lang_folder_sync.sh To reduce potential discrepancies when maintaining concurrent language version, the structure and filenames of language folders `docs/en` and `docs/zh_CN` folders should be kept identical. The script `check_lang_folder_sync.sh` is run on each documentation build to verify if this condition is met.

注解: If a new content is provided in e.g. English, and there is no any translation yet, then the corresponding file in `zh_CN` folder should contain an `.. include::` directive pointing to the source file in English. This will automatically include the English version visible to Chinese readers. For example if a file `docs/zh_CN/contribute/documenting-code.rst` does not have a Chinese translation, then it should contain `.. include:: ../../en/contribute/documenting-code.rst` instead.

---

docs/docs_common.mk It contains the common code which is included into the language-specific `Makefiles`. Note that this file contains couple of customizations comparing to what is provided within standard Sphinx installation, e.g. `gh-linkcheck` command has been added.

docs/gen-dxd.py A Python script that generates API reference files based on Doxygen `xml` output. The files have an `inc` extension and are located in `docs/[lang]/_build/inc` directory created dynamically when documentation is build. Please refer to *Documenting Code* and *API Documentation Template*, section **API Reference** for additional details on this process.

docs/gen-toolchain-links.py There couple of places in documentation that provide links to download the toolchain. To provide one source of this information and reduce effort to manually update several files, this script generates toolchain download links and toolchain unpacking code snippets based on information found in tools/toolchain_versions.mk.

docs/gen-version-specific-includes.py Another Python script to automatically generate reStructuredText Text `.inc` snippets with version-based content for this ESP-IDF version.

docs/html_redirects.py During documentation lifetime some source files are moved between folders or renamed. This Python script is adding a mechanism to redirect documentation pages that have changed URL by generating in the Sphinx output static HTML redirect pages. The script is used together with a redirection list `html_redirect_pages` defined in file docs/conf_common.py.

docs/link-roles.py This is an implementation of a custom Sphinx Roles to help linking from documentation to specific files and folders in ESP-IDF. For description of implemented roles please see *Linking Examples* and *Linking Language Versions*.

docs/local_util.py A collection of utility functions useful primarily when building documentation locally (see *Setup for building documentation locally*) to reduce the time to generate documentation on a second and subsequent builds. The utility functions check what Doxygen `xml` input files have been changed and copy these files to destination folders, so only the changed files are used during build process.

docs/sphinx-known-warnings.txt There are couple of spurious Sphinx warnings that cannot be resolved without doing update to the Sphinx source code itself. For such specific cases respective warnings are documented in `sphinx-known-warnings.txt` file, that is checked during documentation build, to ignore the spurious warnings.

tools/gen_esp_err_to_name.py This script is traversing the ESP-IDF directory structure looking for error codes and messages in source code header files to generate an `.inc` file to include in documentation under *Error Codes Reference*.

tools/kconfig_new/confgen.py Options to configure ESP-IDF's components are contained in `Kconfig` files located inside directories of individual components, e.g. components/bt/Kconfig. This script is traversing the `component` directories to collect configuration options and generate an `.inc` file to include in documentation under *Configuration Options Reference*.

Related Documents

- *Documenting Code*

6.5.4 创建示例项目

[English]

每个 ESP-IDF 的示例都是一个完整的项目，其他人可以将示例复制至本地，并根据实际情况进行一定修改。请注意，示例项目主要是为了展示 ESP-IDF 的功能。

示例项目结构

- `main` 目录需要包含一个名为 `(something)_example_main.c` 的源文件，里面包含示例项目的主要功能。
- 如果该示例项目的子任务比较多，请根据逻辑将其拆分为 `main` 目录下的多个 C 或者 C++ 源文件，并将对应的头文件也放在同一目录下。
- 如果该示例项目具有多种功能，可以考虑在项目中增加一个 `components` 子目录，通过库功能，将示例项目的不同功能划分为不同的组件。注意，如果该组件提供的功能相对完整，且具有一定的通用性，则应该将它们添加到 ESP-IDF 的 `components` 目录中，使其成为 ESP-IDF 的一部分。
- 示例项目需要包含一个 `README.md` 文件，建议使用 示例项目 README 模板 ，并根据项目实际情况进行修改。
- 示例项目需要包含一个 `example_test.py` 文件，用于进行自动化测试。如果在 GitHub 上初次提交 Pull Request 时，可以先不包含这个脚本文件。具体细节，请见有关 Pull Request 的相关内容。

一般准则

示例代码需要遵循《乐鑫物联网开发框架风格指南》。

检查清单

提交一个新的示例项目之前，需要检查以下内容：

- 示例项目的名字（包括 `Makefile` 和 `README.md` 中）应使用 `example`，而不要写 “demo”，“test” 等词汇。
- 每个示例项目只能有一个主要功能。如果某个示例项目有多个主要功能，请将其拆分为两个或更多示例项目。
- 每个示例项目应包含一个 `README.md` 文件，建议使用 示例项目 README 模板 。
- 示例项目中的函数和变量的命令要遵循命名规范 中的要求。对于仅在示例项目源文件中使用的非静态变量/函数，请使用 `example` 或其他类似的前缀。
- 示例项目中的所有代码结构良好，关键代码要有详细注释。
- 示例项目中所有不必要的代码（旧的调试日志，注释掉的代码等）都必须清除掉。
- 示例项目中使用的选项（比如网络名称，地址等）不得直接硬编码，应尽可能地使用配置项，或者定义为宏或常量。
- 配置项可见 `KConfig.projbuild` 文件，该文件中包含一个名为 “Example Configuration” 的菜单。具体情况，请查看现有示例项目。
- 所有的源代码都需要在文件开头指定许可信息（表示该代码是 `in the public domain CC0`）和免责声明。或者，源代码也可以应用 `Apache License 2.0` 许可条款。请查看现有示例项目的许可信息和免责声明，并根据实际情况进行修改。

- 任何第三方代码（无论是直接使用，还是进行了一些改进）均应保留原始代码中的许可信息，且这些代码的许可必须兼容 `Apache License 2.0` 协议。

6.5.5 API Documentation Template

注解： *INSTRUCTIONS*

1. Use this file (docs/api-reference/template.rst) as a template to document API.
2. Change the file name to the name of the header file that represents documented API.
3. Include respective files with descriptions from the API folder using `..include::`
   - README.rst
   - example.rst
   - ...
4. Optionally provide description right in this file.
5. Once done, remove all instructions like this one and any superfluous headers.

Overview

注解： *INSTRUCTIONS*

1. Provide overview where and how this API may be used.
2. Where applicable include code snippets to illustrate functionality of particular functions.
3. To distinguish between sections, use the following heading levels:
   - `#` with overline, for parts
   - `*` with overline, for chapters
   - `=`, for sections
   - `-`, for subsections
   - `^`, for subsubsections
   - `"`, for paragraphs

Application Example

注解: *INSTRUCTIONS*

1. Prepare one or more practical examples to demonstrate functionality of this API.
2. Each example should follow pattern of projects located in `esp-idf/examples/` folder.
3. Place example in this folder complete with `README.md` file.
4. Provide overview of demonstrated functionality in `README.md`.
5. With good overview reader should be able to understand what example does without opening the source code.
6. Depending on complexity of example, break down description of code into parts and provide overview of functionality of each part.
7. Include flow diagram and screenshots of application output if applicable.
8. Finally add in this section synopsis of each example together with link to respective folder in `esp-idf/examples/`.

API Reference

注解: *INSTRUCTIONS*

1. This repository provides for automatic update of API reference documentation using *code markup retrieved by Doxygen from header files*.
2. Update is done on each documentation build by invoking script docs/gen-dxd.py for all header files listed in the `INPUT` statement of docs/Doxyfile.
3. Each line of the `INPUT` statement (other than a comment that begins with `##`) contains a path to header file `*.h` that will be used to generate corresponding `*.inc` files:

```
##
## Wi-Fi - API Reference
##
../components/esp32/include/esp_wifi.h \
../components/esp32/include/esp_smartconfig.h \
```

4. The `*.inc` files contain formatted reference of API members generated automatically on each documentation build. All `*.inc` files are placed in Sphinx `_build` directory. To see directives generated for e.g. `esp_wifi.h`, run `python gen-dxd.py esp32/include/esp_wifi.h`.

5. To show contents of `*.inc` file in documentation, include it as follows:

```
.. include:: /_build/inc/esp_wifi.inc
```

   For example see docs/en/api-reference/wifi/esp_wifi.rst

6. Optionally, rather that using `*.inc` files, you may want to describe API in you own way. See docs/en/api-guides/ulp-cmake.rst for example.

   Below is the list of common `.. doxygen...::` directives:

   - Functions - `.. doxygenfunction:: name_of_function`
   - Unions -`.. doxygenunion:: name_of_union`
   - Structures -`.. doxygenstruct:: name_of_structure` together with `:members:`
   - Macros - `.. doxygendefine:: name_of_define`
   - Type Definitions - `.. doxygentypedef:: name_of_type`
   - Enumerations - `.. doxygenenum:: name_of_enumeration`

   See Breathe documentation for additional information.

   To provide a link to header file, use the *link custom role* as follows:

```
* :component_file:`path_to/header_file.h`
```

7. In any case, to generate API reference, the file docs/Doxyfile should be updated with paths to `*.h` headers that are being documented.

8. When changes are committed and documentation is build, check how this section has been rendered. *Correct annotations* in respective header files, if required.

6.5.6 Contributor Agreement

Individual Contributor Non-Exclusive License Agreement

including the Traditional Patent License OPTION

Thank you for your interest in contributing to Espressif IoT Development Framework (esp-idf) (“We” or “Us”).

The purpose of this contributor agreement (“Agreement”) is to clarify and document the rights granted by contributors to Us. To make this document effective, please follow the instructions at CONTRIBUTING.rst

1. DEFINITIONS

"You" means the Individual Copyright owner who submits a Contribution to Us. If You are an employee and submit the Contribution as part of your employment, You have had Your employer approve this Agreement or sign the Entity version of this document.

"Contribution" means any original work of authorship (software and/or documentation) including any modifications or additions to an existing work, Submitted by You to Us, in which You own the Copyright. If You do not own the Copyright in the entire work of authorship, please contact Us at angus@espressif.com.

"Copyright" means all rights protecting works of authorship owned or controlled by You, including copyright, moral and neighboring rights, as appropriate, for the full term of their existence including any extensions by You.

"Material" means the software or documentation made available by Us to third parties. When this Agreement covers more than one software project, the Material means the software or documentation to which the Contribution was Submitted. After You Submit the Contribution, it may be included in the Material.

"Submit" means any form of physical, electronic, or written communication sent to Us, including but not limited to electronic mailing lists, source code control systems, and issue tracking systems that are managed by, or on behalf of, Us, but excluding communication that is conspicuously marked or otherwise designated in writing by You as "Not a Contribution."

"Submission Date" means the date You Submit a Contribution to Us.

"Documentation" means any non-software portion of a Contribution.

2. LICENSE GRANT

2.1 Copyright License to Us

Subject to the terms and conditions of this Agreement, You hereby grant to Us a worldwide, royalty-free, NON-exclusive, perpetual and irrevocable license, with the right to transfer an unlimited number of non-exclusive licenses or to grant sublicenses to third parties, under the Copyright covering the Contribution to use the Contribution by all means, including, but not limited to:

- to publish the Contribution,
- to modify the Contribution, to prepare derivative works based upon or containing the Contribution and to combine the Contribution with other software code,
- to reproduce the Contribution in original or modified form,
- to distribute, to make the Contribution available to the public, display and publicly perform the Contribution in original or modified form.

2.2 Moral Rights remain unaffected to the extent they are recognized and not waivable by applicable law. Notwithstanding, You may add your name in the header of the source code files of Your Contribution and We will respect this attribution when using Your Contribution.

3. PATENTS

3.1 Patent License

Subject to the terms and conditions of this Agreement You hereby grant to us a worldwide, royalty-free, non-exclusive, perpetual and irrevocable (except as stated in Section 3.2) patent license, with the right to transfer an unlimited number of non-exclusive licenses or to grant sublicenses to third parties, to make, have made, use, sell, offer for sale, import and otherwise transfer the Contribution and the Contribution in combination with the Material (and portions of such combination). This license applies to all patents owned or controlled by You, whether already acquired or hereafter acquired, that would be infringed by making, having made, using, selling, offering for sale, importing or otherwise transferring of Your Contribution(s) alone or by combination of Your Contribution(s) with the Material.

3.2 Revocation of Patent License

You reserve the right to revoke the patent license stated in section 3.1 if we make any infringement claim that is targeted at your Contribution and not asserted for a Defensive Purpose. An assertion of claims of the Patents shall be considered for a "Defensive Purpose" if the claims are asserted against an entity that has filed, maintained, threatened, or voluntarily participated in a patent infringement lawsuit against Us or any of Our licensees.

4. DISCLAIMER

THE CONTRIBUTION IS PROVIDED "AS IS". MORE PARTICULARLY, ALL EXPRESS OR IMPLIED WARRANTIES INCLUDING, WITHOUT LIMITATION, ANY IMPLIED WARRANTY OF MERCHANTABILITY, FITNESS FOR A PARTICULAR PURPOSE AND NON-INFRINGEMENT ARE EXPRESSLY DISCLAIMED BY YOU TO US AND BY US TO YOU. TO THE EXTENT THAT ANY SUCH WARRANTIES CANNOT BE DISCLAIMED, SUCH WARRANTY IS LIMITED IN DURATION TO THE MINIMUM PERIOD PERMITTED BY LAW.

5. Consequential Damage Waiver

TO THE MAXIMUM EXTENT PERMITTED BY APPLICABLE LAW, IN NO EVENT WILL YOU OR US BE LIABLE FOR ANY LOSS OF PROFITS, LOSS OF ANTICIPATED SAVINGS, LOSS OF DATA, INDIRECT, SPECIAL, INCIDENTAL, CONSEQUENTIAL AND EXEMPLARY DAMAGES ARISING OUT OF THIS AGREEMENT REGARDLESS OF THE LEGAL OR EQUITABLE THEORY (CONTRACT, TORT OR OTHERWISE) UPON WHICH THE CLAIM IS BASED.

6. Approximation of Disclaimer and Damage Waiver

IF THE DISCLAIMER AND DAMAGE WAIVER MENTIONED IN SECTION 4 AND SECTION 5 CANNOT BE GIVEN LEGAL EFFECT UNDER APPLICABLE LOCAL LAW, REVIEWING COURTS SHALL APPLY LOCAL LAW THAT MOST CLOSELY APPROXIMATES AN ABSOLUTE WAIVER OF ALL CIVIL LIABILITY IN CONNECTION WITH THE CONTRIBUTION.

7. Term

7.1 This Agreement shall come into effect upon Your acceptance of the terms and conditions.

7.2 In the event of a termination of this Agreement Sections 4, 5, 6, 7 and 8 shall survive such termination and shall remain in full force thereafter. For the avoidance of doubt, Contributions that are already licensed under a free and open source license at the date of the termination shall remain in full force after the termination of this Agreement.

8. Miscellaneous

8.1 This Agreement and all disputes, claims, actions, suits or other proceedings arising out of this agreement or relating in any way to it shall be governed by the laws of People' s Republic of China excluding its private international law provisions.

8.2 This Agreement sets out the entire agreement between You and Us for Your Contributions to Us and overrides all other agreements or understandings.

8.3 If any provision of this Agreement is found void and unenforceable, such provision will be replaced to the extent possible with a provision that comes closest to the meaning of the original provision and that is enforceable. The terms and conditions set forth in this Agreement shall apply notwithstanding any failure of essential purpose of this Agreement or any limited remedy to the maximum extent possible under law.

8.4 You agree to notify Us of any facts or circumstances of which you become aware that would make this Agreement inaccurate in any respect.

You

Date:	
Name:	
Title:	
Address:	

Us

Date:	
Name:	
Title:	
Address:	

CHAPTER 7

ESP-IDF Versions

The ESP-IDF GitHub repository is updated regularly, especially on the "master branch" where new development happens. There are also stable releases which are recommended for production use.

7.1 Releases

Documentation for the current stable version can always be found at this URL:

https://docs.espressif.com/projects/esp-idf/en/stable/

Documentation for the latest version ("master branch") can always be found at this URL:

https://docs.espressif.com/projects/esp-idf/en/latest/

The full history of releases can be found on the GitHub repository Releases page. There you can find release notes, links to each version of the documentation, and instructions for obtaining each version.

Documentation for all releases can also be found in the HTML documentation by clicking the "versions" pop up in the bottom-left corner of the page. You can use this popup to switch between versions of the documentation.

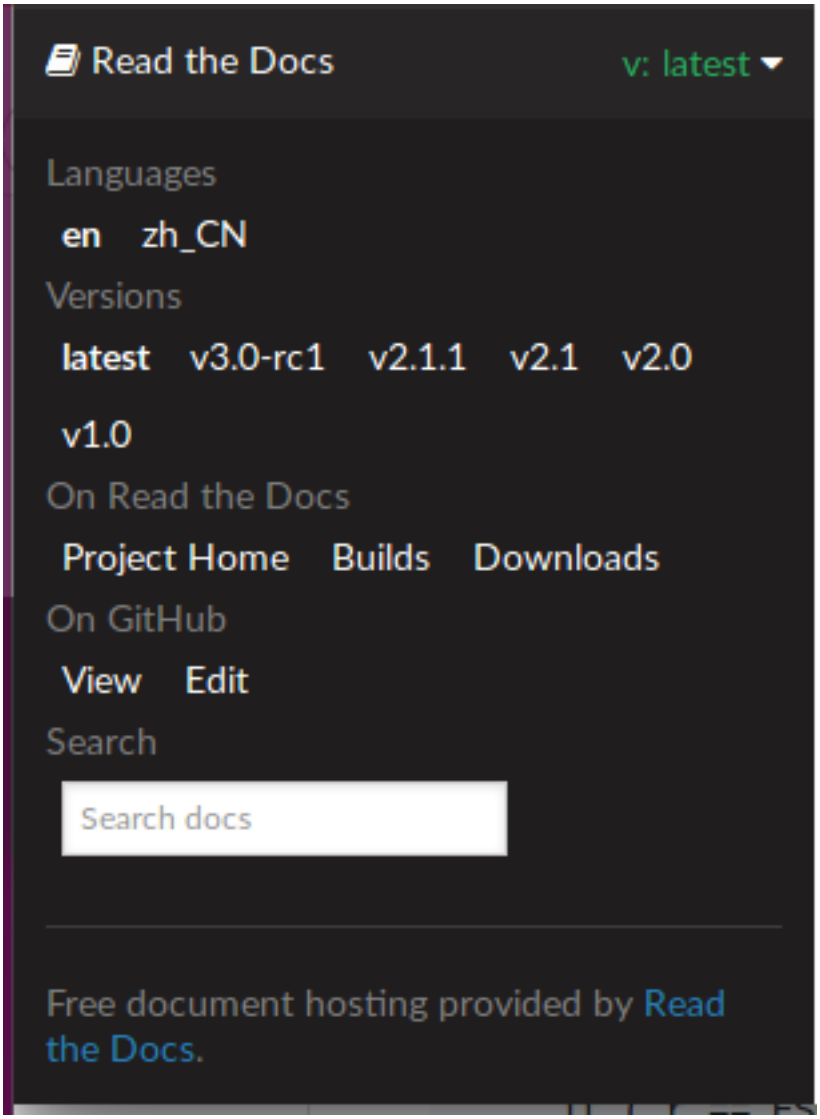

7.2 Which Version Should I Start With?

- For production purposes, use the current stable version. Stable versions have been manually tested, and are updated with "bugfix releases" which fix bugs without changing other functionality (see *Versioning Scheme* for more details).

  In order to maximize the time between updates to new ESP-IDF versions, use the latest stable Long Term Support release version. This version can be found on the Releases page.

- For prototyping, experimentation or for developing new ESP-IDF features, use the latest version (master branch in Git). The latest version in the master branch has all the latest features and has passed automated testing, but has not been completely manually tested ("bleeding edge").

- If a required feature is not yet available in a stable release, but you don' t want to use the master

branch, it is possible to check out a pre-release version or a release branch. It is recommended to start from a stable version and then follow the instructions for *Updating to a Pre-Release Version* or *Updating to a Release Branch*.

See *Updating ESP-IDF* if you already have a local copy of ESP-IDF and wish to update it.

7.3 Versioning Scheme

ESP-IDF uses Semantic Versioning. This means:

- Major Releases like `v3.0` add new functionality and may change functionality. This includes removing deprecated functionality.

  When updating to a new major release (for example, from `v2.1` to `v3.0`), some of your project' s code may need updating and functionality will need to be re-tested. The release notes on the Releases page include lists of Breaking Changes to refer to.

- Minor Releases like `v3.1` add new functionality and fix bugs but will not change or remove documented functionality, or make incompatible changes to public APIs.

  If updating to a new minor release (for example, from `v3.0` to `v3.1`) then none of your project' s code should need updating, but you should re-test your project. Pay particular attention to items mentioned in the release notes on the Releases page.

- Bugfix Releases like `v3.0.1` only fix bugs and do not add new functionality.

  If updating to a new bugfix release (for example, from `v3.0` to `v3.0.1`), you should not need to change any code in your project and should only need to re-test functionality relating directly to bugs listed in the release notes on the Releases page.

7.4 Support Periods

Each ESP-IDF major and minor release version has an associated support period. After this period, the release is End of Life and no longer supported. Some releases are designated Long Term Support, which means the support period is longer than for other releases.

The ESP-IDF Support Period Policy explains this in detail, and describes how the support periods for each release are determined.

Each release on the Releases page includes information about the support period for that particular release.

As a general guideline:

- Using Long Term Support releases will maximize the amount of time between required ESP-IDF major or minor upgrades.

- Using standard stable releases will require more frequent upgrades to new ESP-IDF versions. However, this means that new features and major improvements will be available more frequently.

It is also possible to upgrade from a Long Term Support release to a standard release, and vice versa.

7.5 Checking The Current Version

The local ESP-IDF version can be checked using git:

```
cd $IDF_PATH
git describe --dirty
```

The version is also compiled into the firmware and can be accessed (as a string) via the macro `IDF_VER`. The default ESP-IDF bootloader will print the version on boot (these versions in code will not always update, it only changes if that particular source file is recompiled).

If writing code that needs to support multiple ESP-IDF versions, the version can be checked at compile time using *compile-time macros*.

Examples of ESP-IDF versions:

Version String	Meaning
`v3.2-dev-306-gbeb3611ca`	Master branch pre-release, in development for version 3.2. 306 commits after v3.2 development started. Commit identifier `beb3611ca`.
`v3.0.2`	Stable release, tagged `v3.0.2`.
`v3.1-beta1-75-g346d6b0ea`	Beta version in development (on a *release branch*). 75 commits after `v3.1-beta1` pre-release tag. Commit identifier `346d6b0ea`.
`v3.0.1-dirty`	Stable release, tagged `v3.0.1`. There are modifications in the local ESP-IDF directory (" `dirty` ").

7.6 Git Workflow

The development (Git) workflow of the Espressif ESP-IDF team is:

- New work is always added on the master branch (latest version) first. The ESP-IDF version on `master` is always tagged with `-dev` (for "in development"), for example `v3.1-dev`.
- Changes are first added to an internal Git repository for code review and testing, but are pushed to GitHub after automated testing passes.
- When a new version (developed on `master`) becomes feature complete and "beta" quality, a new branch is made for the release, for example `release/v3.1`. A pre-release tag is also created, for example `v3.1-beta1`. You can see a full list of branches and a list of tags on GitHub. Beta pre-releases have release notes which may include a significant number of Known Issues.

- As testing of the beta version progresses, bug fixes will be added to both the `master` branch and the release branch. New features (for the next release) may start being added to `master` at the same time.
- Once testing is nearly complete a new release candidate is tagged on the release branch, for example `v3.1-rc1`. This is still a pre-release version.
- If no more significant bugs are found or reported then the final Major or Minor Version is tagged, for example `v3.1`. This version appears on the Releases page.
- As bugs are reported in released versions, the fixes will continue to be committed to the same release branch.
- Regular bugfix releases are made from the same release branch. After manual testing is complete, a bugfix release is tagged (i.e. `v3.1.1`) and appears on the Releases page.

7.7 Updating ESP-IDF

Updating ESP-IDF depends on which version(s) you wish to follow:

- *Updating to Stable Release* is recommended for production use.
- *Updating to Master Branch* is recommended for latest features, development use, and testing.
- *Updating to a Release Branch* is a compromise between these two.

注解: These guides assume you already have a local copy of ESP-IDF. To get one, follow the *Getting Started* guide for any ESP-IDF version.

7.7.1 Updating to Stable Release

To update to new ESP-IDF releases (recommended for production use), this is the process to follow:

- Check the Releases page regularly for new releases.
- When a bugfix release for a version you are using is released (for example if using `v3.0.1` and `v3.0.2` is available), check out the new bugfix version into the existing ESP-IDF directory:

```
cd $IDF_PATH
git fetch
git checkout vX.Y.Z
git submodule update --init --recursive
```

- When major or minor updates are released, check the Release Notes on the releases page and decide if you would like to update or to stay with your existing release. Updating is via the same Git commands shown above.

注解: If you installed the stable release via zip file rather than using git, it may not be possible to change versions this way. In this case, update by downloading a new zip file and replacing the entire `IDF_PATH` directory with its contents.

7.7.2 Updating to a Pre-Release Version

It is also possible to `git checkout` a tag corresponding to a pre-release version or release candidate, the process is the same as *Updating to Stable Release*.

Pre-release tags are not always found on the Releases page. Consult the list of tags on GitHub for a full list. Caveats for using a pre-release are similar to *Updating to a Release Branch*.

7.7.3 Updating to Master Branch

注解: Using Master branch means living "on the bleeding edge" with the latest ESP-IDF code.

To use the latest version on the ESP-IDF master branch, this is the process to follow:

- Check out the master branch locally:

```
cd $IDF_PATH
git checkout master
git pull
git submodule update --init --recursive
```

- Periodically, re-run `git pull` to pull the latest version of master. Note that you may need to change your project or report bugs after updating master branch.
- To switch from `master` to a release branch or stable version, run `git checkout` as shown in the other sections.

重要: It is strongly recommended to regularly run `git pull` and then `git submodule update --init --recursive` so a local copy of `master` does not get too old. Arbitrary old master branch revisions are effectively unsupportable "snapshots" that may have undocumented bugs. For a semi-stable version, try *Updating to a Release Branch* instead.

7.7.4 Updating to a Release Branch

In stability terms, using a release branch is part-way between using `master` branch and only using stable releases. A release branch is always beta quality or better, and receives bug fixes before they appear in each stable release.

You can find a list of branches on GitHub.

For example, to follow the branch for ESP-IDF v3.1, including any bugfixes for future releases like `v3.1.1`, etc:

```
cd $IDF_PATH
git fetch
git checkout release/v3.1
git pull
git submodule update --init --recursive
```

Each time you `git pull` this branch, ESP-IDF will be updated with fixes for this release.

注解: The is no dedicated documentation for release branches. It is recommended to use the documentation for the closest version to the branch which is currently checked out.

CHAPTER 8

资源

[English]

- 您可以在 ESP32 论坛 中提出您的问题，访问社区资源。
- 您可以通过 GitHub 的 Issues 版块提交 bug 或功能请求。在提交新 Issue 之前，请先查看现有的 Issues。
- 您可以在 ESP32 IoT Solution 库中找到基于 ESP-IDF 的 解决方案、应用实例、组件和驱动 等内容。
- 通过 Arduino 平台开发应用，请参考 ESP32 Wi-Fi 芯片的 Arduino 内核。
- 关于 ESP32 的书籍列表，请查看 乐鑫 网站。
- 如果您有兴趣参与到 ESP-IDF 的开发，请查阅*Contributions Guide*。
- 关于 ESP32 的其它信息，请查看官网 文档 版块。
- 关于本文档的 PDF 和 HTML 格式下载（最新版本和早期版本），请点击 下载。

CHAPTER 9

Copyrights and Licenses

9.1 Software Copyrights

All original source code in this repository is Copyright (C) 2015-2018 Espressif Systems. This source code is licensed under the Apache License 2.0 as described in the file LICENSE.

Additional third party copyrighted code is included under the following licenses.

Where source code headers specify Copyright & License information, this information takes precedence over the summaries made here.

9.1.1 Firmware Components

These third party libraries can be included into the application (firmware) produced by ESP-IDF.

- Newlib is licensed under the BSD License and is Copyright of various parties, as described in COPYING.NEWLIB.
- Xtensa header files are Copyright (C) 2013 Tensilica Inc and are licensed under the MIT License as reproduced in the individual header files.
- Original parts of FreeRTOS (components/freertos) are Copyright (C) 2015 Real Time Engineers Ltd and is licensed under the GNU General Public License V2 with the FreeRTOS Linking Exception, as described in license.txt.
- Original parts of LWIP (components/lwip) are Copyright (C) 2001, 2002 Swedish Institute of Computer Science and are licensed under the BSD License as described in COPYING file.

- wpa_supplicant Copyright (c) 2003-2005 Jouni Malinen and licensed under the BSD license.
- FreeBSD net80211 Copyright (c) 2004-2008 Sam Leffler, Errno Consulting and licensed under the BSD license.
- JSMN JSON Parser (components/jsmn) Copyright (c) 2010 Serge A. Zaitsev and licensed under the MIT license.
- argtable3 argument parsing library Copyright (C) 1998-2001,2003-2011,2013 Stewart Heitmann and licensed under 3-clause BSD license.
- linenoise line editing library Copyright (c) 2010-2014 Salvatore Sanfilippo, Copyright (c) 2010-2013 Pieter Noordhuis, licensed under 2-clause BSD license.
- libcoap COAP library Copyright (c) 2010-2017 Olaf Bergmann and others, is licensed under 2-clause BSD license.
- libexpat XML parsing library Copyright (c) 1998-2000 Thai Open Source Software Center Ltd and Clark Cooper, Copyright (c) 2001-2017 Expat maintainers, is licensed under MIT license.
- FatFS library, Copyright (C) 2017 ChaN, is licensed under a BSD-style license .
- cJSON library, Copyright (c) 2009-2017 Dave Gamble and cJSON contributors, is licensed under MIT license.
- libsodium library, Copyright (c) 2013-2018 Frank Denis, is licensed under ISC license.
- micro-ecc library, Copyright (c) 2014 Kenneth MacKay, is licensed under 2-clause BSD license.
- nghttp2 library, Copyright (c) 2012, 2014, 2015, 2016 Tatsuhiro Tsujikawa, Copyright (c) 2012, 2014, 2015, 2016 nghttp2 contributors, is licensed under MIT license.
- Mbed TLS library, Copyright (C) 2006-2018 ARM Limited, is licensed under Apache License 2.0.
- SPIFFS library, Copyright (c) 2013-2017 Peter Andersson, is licensed under MIT license.
- SD/MMC driver is derived from OpenBSD SD/MMC driver, Copyright (c) 2006 Uwe Stuehler, and is licensed under BSD license.
- Asio , Copyright (c) 2003-2018 Christopher M. Kohlhoff is licensed under the Boost Software License.
- ESP-MQTT MQTT Package (contiki-mqtt) - Copyright (c) 2014, Stephen Robinson, MQTT-ESP - Tuan PM <tuanpm at live dot com> is licensed under Apache License 2.0.
- mynewt-nimble Apache Mynewt NimBLE, Copyright 2015-2018, The Apache Software Foundation, is licensed under Apache License 2.0.
- BLE Mesh is adapted from Zephyr Project, Copyright (c) 2017-2018 Intel Corporation and licensed under Apache License 2.0

9.1.2 Build Tools

This is the list of licenses for tools included in this repository, which are used to build applications. The tools do not become part of the application (firmware), so their license does not affect licensing of the application.

- esptool.py is Copyright (C) 2014-2016 Fredrik Ahlberg, Angus Gratton and is licensed under the GNU General Public License v2, as described in LICENSE file.
- KConfig is Copyright (C) 2002 Roman Zippel and others, and is licensed under the GNU General Public License V2.

9.2 ROM Source Code Copyrights

ESP32 mask ROM hardware includes binaries compiled from portions of the following third party software:

- Newlib , licensed under the BSD License and is Copyright of various parties, as described in COPYING.NEWLIB.
- Xtensa libhal, Copyright (c) Tensilica Inc and licensed under the MIT license (see below).
- TinyBasic Plus, Copyright Mike Field & Scott Lawrence and licensed under the MIT license (see below).
- miniz, by Rich Geldreich - placed into the public domain.
- wpa_supplicant Copyright (c) 2003-2005 Jouni Malinen and licensed under the BSD license.
- TJpgDec Copyright (C) 2011, ChaN, all right reserved. See below for license.

9.3 Xtensa libhal MIT License

Copyright (c) 2003, 2006, 2010 Tensilica Inc.

Permission is hereby granted, free of charge, to any person obtaining a copy of this software and associated documentation files (the "Software"), to deal in the Software without restriction, including without limitation the rights to use, copy, modify, merge, publish, distribute, sublicense, and/or sell copies of the Software, and to permit persons to whom the Software is furnished to do so, subject to the following conditions:

The above copyright notice and this permission notice shall be included in all copies or substantial portions of the Software.

THE SOFTWARE IS PROVIDED "AS IS" , WITHOUT WARRANTY OF ANY KIND, EXPRESS OR IMPLIED, INCLUDING BUT NOT LIMITED TO THE WARRANTIES OF MERCHANTABILITY, FITNESS FOR A PARTICULAR PURPOSE AND NONINFRINGEMENT. IN NO EVENT SHALL THE AUTHORS OR COPYRIGHT HOLDERS BE LIABLE FOR ANY CLAIM, DAMAGES OR OTHER LIABILITY, WHETHER IN AN ACTION OF CONTRACT, TORT OR OTHERWISE, ARISING FROM,

OUT OF OR IN CONNECTION WITH THE SOFTWARE OR THE USE OR OTHER DEALINGS IN THE SOFTWARE.

9.4 TinyBasic Plus MIT License

Copyright (c) 2012-2013

Permission is hereby granted, free of charge, to any person obtaining a copy of this software and associated documentation files (the "Software"), to deal in the Software without restriction, including without limitation the rights to use, copy, modify, merge, publish, distribute, sublicense, and/or sell copies of the Software, and to permit persons to whom the Software is furnished to do so, subject to the following conditions:

The above copyright notice and this permission notice shall be included in all copies or substantial portions of the Software.

THE SOFTWARE IS PROVIDED "AS IS", WITHOUT WARRANTY OF ANY KIND, EXPRESS OR IMPLIED, INCLUDING BUT NOT LIMITED TO THE WARRANTIES OF MERCHANTABILITY, FITNESS FOR A PARTICULAR PURPOSE AND NONINFRINGEMENT. IN NO EVENT SHALL THE AUTHORS OR COPYRIGHT HOLDERS BE LIABLE FOR ANY CLAIM, DAMAGES OR OTHER LIABILITY, WHETHER IN AN ACTION OF CONTRACT, TORT OR OTHERWISE, ARISING FROM, OUT OF OR IN CONNECTION WITH THE SOFTWARE OR THE USE OR OTHER DEALINGS IN THE SOFTWARE.

9.5 TJpgDec License

TJpgDec - Tiny JPEG Decompressor R0.01 (C)ChaN, 2011 The TJpgDec is a generic JPEG decompressor module for tiny embedded systems. This is a free software that opened for education, research and commercial developments under license policy of following terms.

Copyright (C) 2011, ChaN, all right reserved.

- The TJpgDec module is a free software and there is NO WARRANTY.
- No restriction on use. You can use, modify and redistribute it for personal, non-profit or commercial products UNDER YOUR RESPONSIBILITY.
- Redistributions of source code must retain the above copyright notice.

CHAPTER 10

About

This is documentation of ESP-IDF, the framework to develop applications for ESP32 chip by Espressif.

The ESP32 is 2.4 GHz Wi-Fi and Bluetooth combo, 32 bit dual core chip with 600 DMIPS processing power.

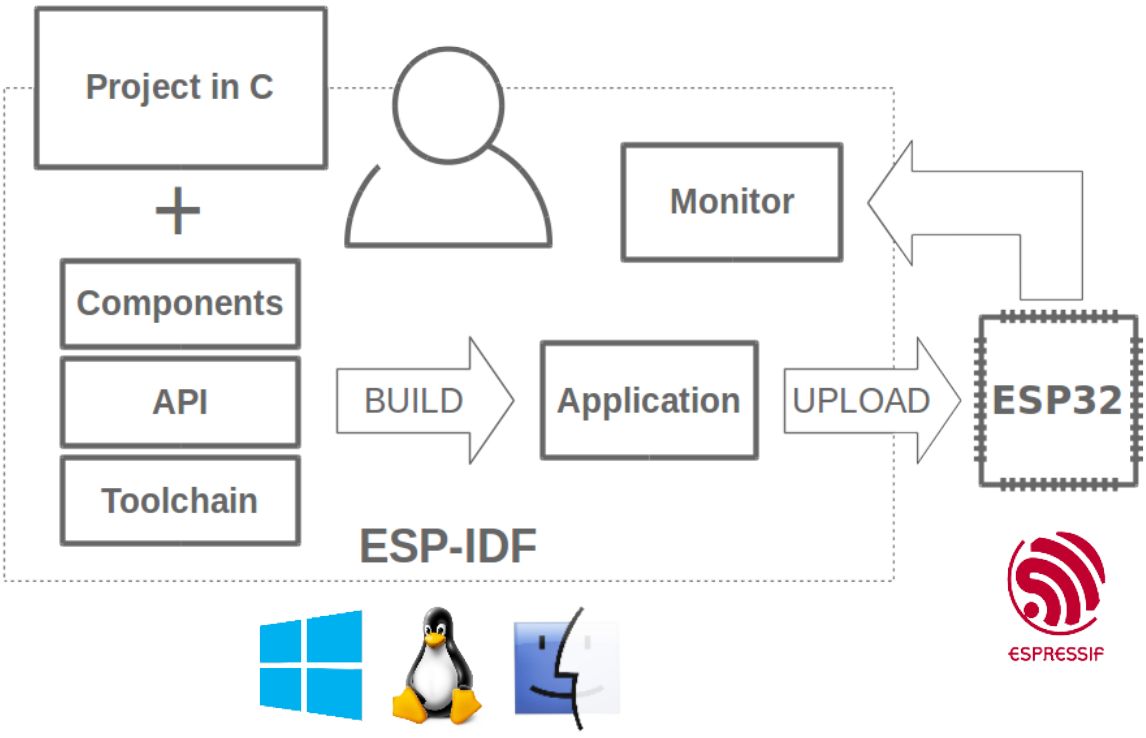

图 1: Espressif IoT Integrated Development Framework

The ESP-IDF, Espressif IoT Development Framework, provides toolchain, API, components and workflows to develop applications for ESP32 using Windows, Linux and Mac OS operating systems.

CHAPTER 11

Switch Between Languages/切换语言

The ESP-IDF Programming Manual is now available in two languages. Please refer to the English version if there is any discrepancy.

《ESP-IDF 编程手册》部分文档现在有两种语言的版本。如有出入请以英文版本为准。

- English/英文
- Chinese/中文

You can easily change from one language to another by the panel on the sidebar like below. Just click on the **Read the Docs** title button on the left-bottom corner if it is folded.

如下图所示，你可使用边栏的面板进行语言的切换。如果该面板被折叠，点击左下角 **Read the Docs** 标题按钮来显示它。

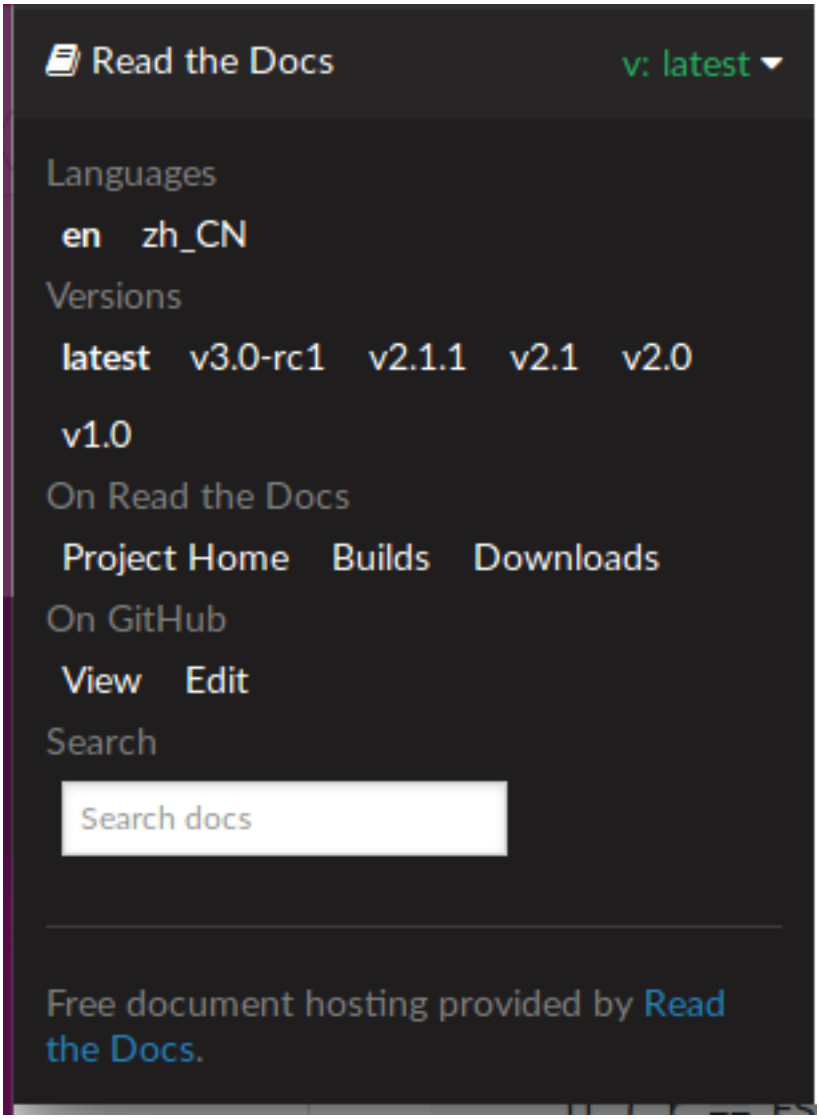
Read the Docs
v: latest
Languages
en zh_CN
Versions
latest v3.0-rc1 v2.1.1 v2.1 v2.0
v1.0
On Read the Docs
Project Home Builds Downloads
On GitHub
View Edit
Search
Search docs
Free document hosting provided by Read the Docs.

- genindex

索引

符号

__anonymous8 (*C++ 类型*), 417
__spicommon_periph_claim (*C 宏*), 1001
__spicommon_periph_claim1 (*C 宏*), 1001
__spicommon_periph_claim2 (*C 宏*), 1001

A

ADC1_CHANNEL_0 (*C++ 枚举子*), 785
ADC1_CHANNEL_0_GPIO_NUM (*C 宏*), 791
ADC1_CHANNEL_1 (*C++ 枚举子*), 785
ADC1_CHANNEL_1_GPIO_NUM (*C 宏*), 791
ADC1_CHANNEL_2 (*C++ 枚举子*), 785
ADC1_CHANNEL_2_GPIO_NUM (*C 宏*), 791
ADC1_CHANNEL_3 (*C++ 枚举子*), 786
ADC1_CHANNEL_3_GPIO_NUM (*C 宏*), 791
ADC1_CHANNEL_4 (*C++ 枚举子*), 786
ADC1_CHANNEL_4_GPIO_NUM (*C 宏*), 791
ADC1_CHANNEL_5 (*C++ 枚举子*), 786
ADC1_CHANNEL_5_GPIO_NUM (*C 宏*), 792
ADC1_CHANNEL_6 (*C++ 枚举子*), 786
ADC1_CHANNEL_6_GPIO_NUM (*C 宏*), 792
ADC1_CHANNEL_7 (*C++ 枚举子*), 786
ADC1_CHANNEL_7_GPIO_NUM (*C 宏*), 792
ADC1_CHANNEL_MAX (*C++ 枚举子*), 786
adc1_channel_t (*C++ 类型*), 785
adc1_config_channel_atten (*C++ 函数*), 779
adc1_config_width (*C++ 函数*), 778
adc1_get_raw (*C++ 函数*), 780
ADC1_GPIO32_CHANNEL (*C 宏*), 791
ADC1_GPIO33_CHANNEL (*C 宏*), 791
ADC1_GPIO34_CHANNEL (*C 宏*), 792
ADC1_GPIO35_CHANNEL (*C 宏*), 792
ADC1_GPIO36_CHANNEL (*C 宏*), 791
ADC1_GPIO37_CHANNEL (*C 宏*), 791
ADC1_GPIO38_CHANNEL (*C 宏*), 791
ADC1_GPIO39_CHANNEL (*C 宏*), 791
adc1_pad_get_io_num (*C++ 函数*), 778
adc1_ulp_enable (*C++ 函数*), 782
ADC2_CHANNEL_0 (*C++ 枚举子*), 786
ADC2_CHANNEL_0_GPIO_NUM (*C 宏*), 792
ADC2_CHANNEL_1 (*C++ 枚举子*), 786
ADC2_CHANNEL_1_GPIO_NUM (*C 宏*), 792
ADC2_CHANNEL_2 (*C++ 枚举子*), 786
ADC2_CHANNEL_2_GPIO_NUM (*C 宏*), 792
ADC2_CHANNEL_3 (*C++ 枚举子*), 786
ADC2_CHANNEL_3_GPIO_NUM (*C 宏*), 792
ADC2_CHANNEL_4 (*C++ 枚举子*), 786
ADC2_CHANNEL_4_GPIO_NUM (*C 宏*), 792
ADC2_CHANNEL_5 (*C++ 枚举子*), 786
ADC2_CHANNEL_5_GPIO_NUM (*C 宏*), 792
ADC2_CHANNEL_6 (*C++ 枚举子*), 786
ADC2_CHANNEL_6_GPIO_NUM (*C 宏*), 792
ADC2_CHANNEL_7 (*C++ 枚举子*), 786
ADC2_CHANNEL_7_GPIO_NUM (*C 宏*), 792
ADC2_CHANNEL_8 (*C++ 枚举子*), 786
ADC2_CHANNEL_8_GPIO_NUM (*C 宏*), 792
ADC2_CHANNEL_9 (*C++ 枚举子*), 786
ADC2_CHANNEL_9_GPIO_NUM (*C 宏*), 792
ADC2_CHANNEL_MAX (*C++ 枚举子*), 786
adc2_channel_t (*C++ 类型*), 786

adc2_config_channel_atten (C++ 函数), 783
adc2_get_raw (C++ 函数), 783
ADC2_GPIO0_CHANNEL (C 宏), 792
ADC2_GPIO12_CHANNEL (C 宏), 792
ADC2_GPIO13_CHANNEL (C 宏), 792
ADC2_GPIO14_CHANNEL (C 宏), 792
ADC2_GPIO15_CHANNEL (C 宏), 792
ADC2_GPIO25_CHANNEL (C 宏), 792
ADC2_GPIO26_CHANNEL (C 宏), 792
ADC2_GPIO27_CHANNEL (C 宏), 792
ADC2_GPIO2_CHANNEL (C 宏), 792
ADC2_GPIO4_CHANNEL (C 宏), 792
adc2_pad_get_io_num (C++ 函数), 783
adc2_vref_to_gpio (C++ 函数), 784
ADC_ATTEN_0db (C 宏), 784
ADC_ATTEN_11db (C 宏), 784
ADC_ATTEN_2_5db (C 宏), 784
ADC_ATTEN_6db (C 宏), 784
ADC_ATTEN_DB_0 (C++ 枚举子), 785
ADC_ATTEN_DB_11 (C++ 枚举子), 785
ADC_ATTEN_DB_2_5 (C++ 枚举子), 785
ADC_ATTEN_DB_6 (C++ 枚举子), 785
ADC_ATTEN_MAX (C++ 枚举子), 785
adc_atten_t (C++ 类型), 785
adc_bits_width_t (C++ 类型), 785
ADC_CHANNEL_0 (C++ 枚举子), 787
ADC_CHANNEL_1 (C++ 枚举子), 787
ADC_CHANNEL_2 (C++ 枚举子), 787
ADC_CHANNEL_3 (C++ 枚举子), 787
ADC_CHANNEL_4 (C++ 枚举子), 787
ADC_CHANNEL_5 (C++ 枚举子), 787
ADC_CHANNEL_6 (C++ 枚举子), 787
ADC_CHANNEL_7 (C++ 枚举子), 787
ADC_CHANNEL_8 (C++ 枚举子), 787
ADC_CHANNEL_9 (C++ 枚举子), 787
ADC_CHANNEL_MAX (C++ 枚举子), 787
adc_channel_t (C++ 类型), 787
ADC_ENCODE_11BIT (C++ 枚举子), 788
ADC_ENCODE_12BIT (C++ 枚举子), 788
ADC_ENCODE_MAX (C++ 枚举子), 788
adc_gpio_init (C++ 函数), 781
ADC_I2S_DATA_SRC_ADC (C++ 枚举子), 788
ADC_I2S_DATA_SRC_IO_SIG (C++ 枚举子), 788
ADC_I2S_DATA_SRC_MAX (C++ 枚举子), 788
adc_i2s_encode_t (C++ 类型), 787
adc_i2s_mode_init (C++ 函数), 782
adc_i2s_source_t (C++ 类型), 788
adc_power_acquire (C++ 函数), 781
adc_power_off (C++ 函数), 781
adc_power_on (C++ 函数), 780
adc_power_release (C++ 函数), 781
adc_set_clk_div (C++ 函数), 781
adc_set_data_inv (C++ 函数), 781
adc_set_data_width (C++ 函数), 779
adc_set_i2s_data_source (C++ 函数), 782
ADC_UNIT_1 (C++ 枚举子), 787
ADC_UNIT_2 (C++ 枚举子), 787
ADC_UNIT_ALTER (C++ 枚举子), 787
ADC_UNIT_BOTH (C++ 枚举子), 787
ADC_UNIT_MAX (C++ 枚举子), 787
adc_unit_t (C++ 类型), 787
ADC_WIDTH_10Bit (C 宏), 785
ADC_WIDTH_11Bit (C 宏), 785
ADC_WIDTH_12Bit (C 宏), 785
ADC_WIDTH_9Bit (C 宏), 784
ADC_WIDTH_BIT_10 (C++ 枚举子), 785
ADC_WIDTH_BIT_11 (C++ 枚举子), 785
ADC_WIDTH_BIT_12 (C++ 枚举子), 785
ADC_WIDTH_BIT_9 (C++ 枚举子), 785
ADC_WIDTH_MAX (C++ 枚举子), 785
ADD_DEV_FLUSHABLE_DEV_FLAG (C 宏), 393
ADD_DEV_RM_AFTER_PROV_FLAG (C 宏), 393
ADD_DEV_START_PROV_NOW_FLAG (C 宏), 393
ADV_CHNL_37 (C++ 枚举子), 201
ADV_CHNL_38 (C++ 枚举子), 201
ADV_CHNL_39 (C++ 枚举子), 201
ADV_CHNL_ALL (C++ 枚举子), 201
ADV_FILTER_ALLOW_SCAN_ANY_CON_ANY (C++ 枚举子), 201
ADV_FILTER_ALLOW_SCAN_ANY_CON_WLST (C++ 枚举子), 201
ADV_FILTER_ALLOW_SCAN_WLST_CON_ANY (C++ 枚举子), 201
ADV_FILTER_ALLOW_SCAN_WLST_CON_WLST (C++ 枚

举子), 201
ADV_TYPE_DIRECT_IND_HIGH (C++ 枚举子), 201
ADV_TYPE_DIRECT_IND_LOW (C++ 枚举子), 201
ADV_TYPE_IND (C++ 枚举子), 201
ADV_TYPE_NONCONN_IND (C++ 枚举子), 201
ADV_TYPE_SCAN_IND (C++ 枚举子), 201

B

BD_ADDR (C++ 类型), 408
BD_ADDR_LEN (C 宏), 393
BLE_ADDR_TYPE_PUBLIC (C++ 枚举子), 166
BLE_ADDR_TYPE_RANDOM (C++ 枚举子), 166
BLE_ADDR_TYPE_RPA_PUBLIC (C++ 枚举子), 166
BLE_ADDR_TYPE_RPA_RANDOM (C++ 枚举子), 166
BLE_BIT (C 宏), 197
BLE_HCI_UART_H4_ACL (C 宏), 347
BLE_HCI_UART_H4_CMD (C 宏), 347
BLE_HCI_UART_H4_EVT (C 宏), 347
BLE_HCI_UART_H4_NONE (C 宏), 347
BLE_HCI_UART_H4_SCO (C 宏), 347
BLE_SCAN_DUPLICATE_DISABLE (C++ 枚举子), 203
BLE_SCAN_DUPLICATE_ENABLE (C++ 枚举子), 203
BLE_SCAN_DUPLICATE_MAX (C++ 枚举子), 203
BLE_SCAN_FILTER_ALLOW_ALL (C++ 枚举子), 202
BLE_SCAN_FILTER_ALLOW_ONLY_WLST (C++ 枚举子), 203
BLE_SCAN_FILTER_ALLOW_UND_RPA_DIR (C++ 枚举子), 203
BLE_SCAN_FILTER_ALLOW_WLIST_PRA_DIR (C++ 枚举子), 203
BLE_SCAN_TYPE_ACTIVE (C++ 枚举子), 202
BLE_SCAN_TYPE_PASSIVE (C++ 枚举子), 202
BT_CONTROLLER_INIT_CONFIG_DEFAULT (C 宏), 160
BT_OCTET32 (C++ 类型), 408
BT_OCTET32_LEN (C 宏), 393

C

can_clear_receive_queue (C++ 函数), 810
can_clear_transmit_queue (C++ 函数), 810
can_driver_install (C++ 函数), 806
can_driver_uninstall (C++ 函数), 806
can_filter_config_t (C++ 类), 812
can_filter_config_t::acceptance_code (C++ 成员), 812
can_filter_config_t::acceptance_mask (C++ 成员), 812
can_filter_config_t::single_filter (C++ 成员), 812
can_general_config_t (C++ 类), 810
can_general_config_t::alerts_enabled (C++ 成员), 811
can_general_config_t::bus_off_io (C++ 成员), 811
can_general_config_t::clkout_divider (C++ 成员), 811
can_general_config_t::clkout_io (C++ 成员), 811
can_general_config_t::intr_flags (C++ 成员), 811
can_general_config_t::mode (C++ 成员), 811
can_general_config_t::rx_io (C++ 成员), 811
can_general_config_t::rx_queue_len (C++ 成员), 811
can_general_config_t::tx_io (C++ 成员), 811
can_general_config_t::tx_queue_len (C++ 成员), 811
can_get_status_info (C++ 函数), 810
can_initiate_recovery (C++ 函数), 809
can_message_t (C++ 类), 813
can_message_t::data (C++ 成员), 813
can_message_t::data_length_code (C++ 成员), 813
can_message_t::flags (C++ 成员), 813
can_message_t::identifier (C++ 成员), 813
CAN_MODE_LISTEN_ONLY (C++ 枚举子), 813
CAN_MODE_NO_ACK (C++ 枚举子), 813
CAN_MODE_NORMAL (C++ 枚举子), 813
can_mode_t (C++ 类型), 813
can_read_alerts (C++ 函数), 808
can_receive (C++ 函数), 808
can_reconfigure_alerts (C++ 函数), 809
can_start (C++ 函数), 807
CAN_STATE_BUS_OFF (C++ 枚举子), 814
CAN_STATE_RECOVERING (C++ 枚举子), 814

CAN_STATE_RUNNING (C++ 枚举子), 814
CAN_STATE_STOPPED (C++ 枚举子), 814
can_state_t (C++ 类型), 813
can_status_info_t (C++ 类), 812
can_status_info_t::arb_lost_count (C++ 成员), 813
can_status_info_t::bus_error_count (C++ 成员), 813
can_status_info_t::msgs_to_rx (C++ 成员), 812
can_status_info_t::msgs_to_tx (C++ 成员), 812
can_status_info_t::rx_error_counter (C++ 成员), 812
can_status_info_t::rx_missed_count (C++ 成员), 812
can_status_info_t::state (C++ 成员), 812
can_status_info_t::tx_error_counter (C++ 成员), 812
can_status_info_t::tx_failed_count (C++ 成员), 812
can_stop (C++ 函数), 807
can_timing_config_t (C++ 类), 811
can_timing_config_t::brp (C++ 成员), 811
can_timing_config_t::sjw (C++ 成员), 812
can_timing_config_t::triple_sampling (C++ 成员), 812
can_timing_config_t::tseg_1 (C++ 成员), 811
can_timing_config_t::tseg_2 (C++ 成员), 811
can_transmit (C++ 函数), 807
CHIP_ESP32 (C++ 枚举子), 1603
CHIP_FEATURE_BLE (C 宏), 1602
CHIP_FEATURE_BT (C 宏), 1602
CHIP_FEATURE_EMB_FLASH (C 宏), 1602
CHIP_FEATURE_WIFI_BGN (C 宏), 1602
CONFIG_EFUSE_CUSTOM_TABLE, 1505
CONFIG_EFUSE_MAX_BLK_LEN, 1505
CONFIG_EFUSE_VIRTUAL, 1510
CONFIG_ESPTOOLPY_FLASHSIZE, 1229
CONFIG_EVENT_LOOP_PROFILING, 1538
CONFIG_HEAP_TRACING_STACK_DEPTH (C 宏), 1487
CONFIG_LOG_DEFAULT_LEVEL, 1526, 1527
CONFIG_SPIRAM_BANKSWITCH_ENABLE, 1487
CONFIG_SPIRAM_BANKSWITCH_RESERVE, 1487
CONFIG_USE_ONLY_LWIP_SELECT, 1291

D

DAC_CHANNEL_1 (C++ 枚举子), 816
DAC_CHANNEL_1_GPIO_NUM (C 宏), 816
DAC_CHANNEL_2 (C++ 枚举子), 816
DAC_CHANNEL_2_GPIO_NUM (C 宏), 816
DAC_CHANNEL_MAX (C++ 枚举子), 816
dac_channel_t (C++ 类型), 816
DAC_GPIO25_CHANNEL (C 宏), 816
DAC_GPIO26_CHANNEL (C 宏), 816
dac_i2s_disable (C++ 函数), 816
dac_i2s_enable (C++ 函数), 816
dac_output_disable (C++ 函数), 815
dac_output_enable (C++ 函数), 815
dac_output_voltage (C++ 函数), 815
dac_pad_get_io_num (C++ 函数), 815
DEFAULT_HTTP_BUF_SIZE (C 宏), 1120
DEL_DEV_ADDR_FLAG (C 宏), 393
DEL_DEV_UUID_FLAG (C 宏), 394
dmaworkaround_cb_t (C++ 类型), 1001

E

eAbortSleep (C++ 枚举子), 1355
eBlocked (C++ 枚举子), 1354
eDeleted (C++ 枚举子), 1354
EFUSE_BLK0 (C++ 枚举子), 1518
EFUSE_BLK1 (C++ 枚举子), 1518
EFUSE_BLK2 (C++ 枚举子), 1518
EFUSE_BLK3 (C++ 枚举子), 1518
EFUSE_CODE_SCHEME_SELECTOR, 1507
EFUSE_CODING_SCHEME_3_4 (C++ 枚举子), 1518
EFUSE_CODING_SCHEME_NONE (C++ 枚举子), 1518
EFUSE_CODING_SCHEME_REPEAT (C++ 枚举子), 1518
eIncrement (C++ 枚举子), 1355
eNoAction (C++ 枚举子), 1355
eNoTasksWaitingTimeout (C++ 枚举子), 1355
eNotifyAction (C++ 类型), 1354
eReady (C++ 枚举子), 1354
eRunning (C++ 枚举子), 1354
eSetBits (C++ 枚举子), 1355
eSetValueWithoutOverwrite (C++ 枚举子), 1355

eSetValueWithOverwrite (C++ 枚举子), 1355
eSleepModeStatus (C++ 类型), 1355
ESP_A2D_AUDIO_CFG_EVT (C++ 枚举子), 300
ESP_A2D_AUDIO_STATE_EVT (C++ 枚举子), 300
ESP_A2D_AUDIO_STATE_REMOTE_SUSPEND (C++ 枚举子), 299
ESP_A2D_AUDIO_STATE_STARTED (C++ 枚举子), 299
ESP_A2D_AUDIO_STATE_STOPPED (C++ 枚举子), 299
esp_a2d_audio_state_t (C++ 类型), 299
esp_a2d_cb_event_t (C++ 类型), 300
esp_a2d_cb_param_t (C++ 类型), 295
esp_a2d_cb_param_t::a2d_audio_cfg_param (C++ 类), 295
esp_a2d_cb_param_t::a2d_audio_cfg_param::mcc (C++ 成员), 295
esp_a2d_cb_param_t::a2d_audio_cfg_param::remote_bda (C++ 成员), 295
esp_a2d_cb_param_t::a2d_audio_stat_param (C++ 类), 295
esp_a2d_cb_param_t::a2d_audio_stat_param::remote_bda (C++ 成员), 296
esp_a2d_cb_param_t::a2d_audio_stat_param::state (C++ 成员), 296
esp_a2d_cb_param_t::a2d_conn_stat_param (C++ 类), 296
esp_a2d_cb_param_t::a2d_conn_stat_param::disc_rsn (C++ 成员), 296
esp_a2d_cb_param_t::a2d_conn_stat_param::remote_bda (C++ 成员), 296
esp_a2d_cb_param_t::a2d_conn_stat_param::state (C++ 成员), 296
esp_a2d_cb_param_t::a2d_prof_stat (C++ 成员), 295
esp_a2d_cb_param_t::a2d_prof_stat_param (C++ 类), 296
esp_a2d_cb_param_t::a2d_prof_stat_param::init_state (C++ 成员), 296
esp_a2d_cb_param_t::audio_cfg (C++ 成员), 295
esp_a2d_cb_param_t::audio_stat (C++ 成员), 295
esp_a2d_cb_param_t::conn_stat (C++ 成员), 295
esp_a2d_cb_param_t::media_ctrl_stat (C++ 成员), 295
esp_a2d_cb_param_t::media_ctrl_stat_param (C++ 类), 296
esp_a2d_cb_param_t::media_ctrl_stat_param::cmd (C++ 成员), 296
esp_a2d_cb_param_t::media_ctrl_stat_param::status (C++ 成员), 296
esp_a2d_cb_t (C++ 类型), 297
ESP_A2D_CIE_LEN_ATRAC (C 宏), 297
ESP_A2D_CIE_LEN_M12 (C 宏), 297
ESP_A2D_CIE_LEN_M24 (C 宏), 297
ESP_A2D_CIE_LEN_SBC (C 宏), 297
ESP_A2D_CONNECTION_STATE_CONNECTED (C++ 枚举子), 298
ESP_A2D_CONNECTION_STATE_CONNECTING (C++ 枚举子), 298
ESP_A2D_CONNECTION_STATE_DISCONNECTED (C++ 枚举子), 298
ESP_A2D_CONNECTION_STATE_DISCONNECTING (C++ 枚举子), 298
ESP_A2D_CONNECTION_STATE_EVT (C++ 枚举子), 300
esp_a2d_connection_state_t (C++ 类型), 298
ESP_A2D_DEINIT_SUCCESS (C++ 枚举子), 298
ESP_A2D_DISC_RSN_ABNORMAL (C++ 枚举子), 299
ESP_A2D_DISC_RSN_NORMAL (C++ 枚举子), 299
esp_a2d_disc_rsn_t (C++ 类型), 298
esp_a2d_init_state_t (C++ 类型), 298
ESP_A2D_INIT_SUCCESS (C++ 枚举子), 298
esp_a2d_mcc_t (C++ 类), 296
esp_a2d_mcc_t::cie (C++ 成员), 297
esp_a2d_mcc_t::type (C++ 成员), 297
ESP_A2D_MCT_ATRAC (C 宏), 297
ESP_A2D_MCT_M12 (C 宏), 297
ESP_A2D_MCT_M24 (C 宏), 297
ESP_A2D_MCT_NON_A2DP (C 宏), 297
ESP_A2D_MCT_SBC (C 宏), 297
esp_a2d_mct_t (C++ 类型), 297
esp_a2d_media_ctrl (C++ 函数), 293
ESP_A2D_MEDIA_CTRL_ACK_BUSY (C++ 枚举子), 299
ESP_A2D_MEDIA_CTRL_ACK_EVT (C++ 枚举子), 300
ESP_A2D_MEDIA_CTRL_ACK_FAILURE (C++ 枚举子),

299
ESP_A2D_MEDIA_CTRL_ACK_SUCCESS (C++ 枚举子), 299
esp_a2d_media_ctrl_ack_t (C++ 类型), 299
ESP_A2D_MEDIA_CTRL_CHECK_SRC_RDY (C++ 枚举子), 299
ESP_A2D_MEDIA_CTRL_NONE (C++ 枚举子), 299
ESP_A2D_MEDIA_CTRL_START (C++ 枚举子), 299
ESP_A2D_MEDIA_CTRL_STOP (C++ 枚举子), 299
ESP_A2D_MEDIA_CTRL_SUSPEND (C++ 枚举子), 299
esp_a2d_media_ctrl_t (C++ 类型), 299
ESP_A2D_PROF_STATE_EVT (C++ 枚举子), 300
esp_a2d_register_callback (C++ 函数), 291
esp_a2d_sink_connect (C++ 函数), 292
esp_a2d_sink_data_cb_t (C++ 类型), 297
esp_a2d_sink_deinit (C++ 函数), 292
esp_a2d_sink_disconnect (C++ 函数), 293
esp_a2d_sink_init (C++ 函数), 292
esp_a2d_sink_register_data_callback (C++ 函数), 292
esp_a2d_source_connect (C++ 函数), 294
esp_a2d_source_data_cb_t (C++ 类型), 298
esp_a2d_source_deinit (C++ 函数), 294
esp_a2d_source_disconnect (C++ 函数), 294
esp_a2d_source_init (C++ 函数), 293
esp_a2d_source_register_data_callback (C++ 函数), 294
esp_adc_cal_characteristics_t (C++ 类), 790
esp_adc_cal_characteristics_t::adc_num (C++ 成员), 790
esp_adc_cal_characteristics_t::atten (C++ 成员), 790
esp_adc_cal_characteristics_t::bit_width (C++ 成员), 790
esp_adc_cal_characteristics_t::coeff_a (C++ 成员), 790
esp_adc_cal_characteristics_t::coeff_b (C++ 成员), 790
esp_adc_cal_characteristics_t::high_curve (C++ 成员), 791
esp_adc_cal_characteristics_t::low_curve (C++ 成员), 790
esp_adc_cal_characteristics_t::vref (C++ 成员), 790
esp_adc_cal_characterize (C++ 函数), 788
esp_adc_cal_check_efuse (C++ 函数), 788
esp_adc_cal_get_voltage (C++ 函数), 789
esp_adc_cal_raw_to_voltage (C++ 函数), 789
ESP_ADC_CAL_VAL_DEFAULT_VREF (C++ 枚举子), 791
ESP_ADC_CAL_VAL_EFUSE_TP (C++ 枚举子), 791
ESP_ADC_CAL_VAL_EFUSE_VREF (C++ 枚举子), 791
esp_adc_cal_value_t (C++ 类型), 791
ESP_APP_ID_MAX (C 宏), 165
ESP_APP_ID_MIN (C 宏), 165
esp_apptrace_buffer_get (C++ 函数), 1546
esp_apptrace_buffer_put (C++ 函数), 1547
esp_apptrace_dest_t (C++ 类型), 1552
ESP_APPTRACE_DEST_TRAX (C++ 枚举子), 1552
ESP_APPTRACE_DEST_UART0 (C++ 枚举子), 1552
esp_apptrace_down_buffer_config (C++ 函数), 1546
esp_apptrace_down_buffer_get (C++ 函数), 1549
esp_apptrace_down_buffer_put (C++ 函数), 1549
esp_apptrace_fclose (C++ 函数), 1550
esp_apptrace_flush (C++ 函数), 1548
esp_apptrace_flush_nolock (C++ 函数), 1548
esp_apptrace_fopen (C++ 函数), 1550
esp_apptrace_fread (C++ 函数), 1550
esp_apptrace_fseek (C++ 函数), 1551
esp_apptrace_fstop (C++ 函数), 1551
esp_apptrace_ftell (C++ 函数), 1551
esp_apptrace_fwrite (C++ 函数), 1550
esp_apptrace_host_is_connected (C++ 函数), 1549
esp_apptrace_init (C++ 函数), 1546
esp_apptrace_read (C++ 函数), 1548
esp_apptrace_vprintf (C++ 函数), 1548
esp_apptrace_vprintf_to (C++ 函数), 1547
esp_apptrace_write (C++ 函数), 1547
esp_attr_control_t (C++ 类), 207
esp_attr_control_t::auto_rsp (C++ 成员), 207
esp_attr_desc_t (C++ 类), 207
esp_attr_desc_t::length (C++ 成员), 207

esp_attr_desc_t::max_length (C++ 成员), 207
esp_attr_desc_t::perm (C++ 成员), 207
esp_attr_desc_t::uuid_length (C++ 成员), 207
esp_attr_desc_t::uuid_p (C++ 成员), 207
esp_attr_desc_t::value (C++ 成员), 207
esp_attr_value_t (C++ 类), 208
esp_attr_value_t::attr_len (C++ 成员), 208
esp_attr_value_t::attr_max_len (C++ 成员), 208
esp_attr_value_t::attr_value (C++ 成员), 208
esp_avrc_ct_cb_event_t (C++ 类型), 306
esp_avrc_ct_cb_param_t (C++ 类型), 303
esp_avrc_ct_cb_param_t::avrc_ct_change_notify_param (C++ 类), 303
esp_avrc_ct_cb_param_t::avrc_ct_change_notify_param::event_id (C++ 成员), 303
esp_avrc_ct_cb_param_t::avrc_ct_change_notify_param::event_parameter (C++ 成员), 303
esp_avrc_ct_cb_param_t::avrc_ct_conn_stat_param (C++ 类), 303
esp_avrc_ct_cb_param_t::avrc_ct_conn_stat_param::connected (C++ 成员), 304
esp_avrc_ct_cb_param_t::avrc_ct_conn_stat_param::remote_bda (C++ 成员), 304
esp_avrc_ct_cb_param_t::avrc_ct_meta_rsp_param (C++ 类), 304
esp_avrc_ct_cb_param_t::avrc_ct_meta_rsp_param::attr_id (C++ 成员), 304
esp_avrc_ct_cb_param_t::avrc_ct_meta_rsp_param::attr_text (C++ 成员), 304
esp_avrc_ct_cb_param_t::avrc_ct_meta_rsp_param::attrs (C++ 成员), 304
esp_avrc_ct_cb_param_t::avrc_ct_psth_rsp_param (C++ 类), 304
esp_avrc_ct_cb_param_t::avrc_ct_psth_rsp_param::key_code (C++ 成员), 304
esp_avrc_ct_cb_param_t::avrc_ct_psth_rsp_param::key_state (C++ 成员), 304
esp_avrc_ct_cb_param_t::avrc_ct_psth_rsp_param::rsp_code (C++ 成员), 304
esp_avrc_ct_cb_param_t::avrc_ct_rmt_feats_param (C++ 类), 304
esp_avrc_ct_cb_param_t::avrc_ct_rmt_feats_param::feat_mask (C++ 成员), 304
esp_avrc_ct_cb_param_t::avrc_ct_rmt_feats_param::remote_bd (C++ 成员), 304
esp_avrc_ct_cb_param_t::change_ntf (C++ 成员), 303
esp_avrc_ct_cb_param_t::conn_stat (C++ 成员), 303
esp_avrc_ct_cb_param_t::meta_rsp (C++ 成员), 303
esp_avrc_ct_cb_param_t::psth_rsp (C++ 成员), 303
esp_avrc_ct_cb_param_t::rmt_feats (C++ 成员), 303
esp_avrc_ct_cb_t (C++ 类型), 305
ESP_AVRC_CT_CHANGE_NOTIFY_EVT (C++ 枚举子), 306
ESP_AVRC_CT_CONNECTION_STATE_EVT (C++ 枚举子), 306
esp_avrc_ct_deinit (C++ 函数), 301
esp_avrc_ct_deinit (C++ 函数), 301
ESP_AVRC_CT_METADATA_RSP_EVT (C++ 枚举子), 306
ESP_AVRC_CT_PASSTHROUGH_RSP_EVT (C++ 枚举子), 306
ESP_AVRC_CT_PLAY_STATUS_RSP_EVT (C++ 枚举子), 306
esp_avrc_ct_register_callback (C++ 函数), 300
ESP_AVRC_CT_REMOTE_FEATURES_EVT (C++ 枚举子), 306
esp_avrc_ct_send_metadata_cmd (C++ 函数), 302
esp_avrc_ct_send_passthrough_cmd (C++ 函数), 302
esp_avrc_ct_send_register_notification_cmd (C++ 函数), 302
esp_avrc_ct_send_set_player_value_cmd (C++ 函数), 301
ESP_AVRC_FEAT_ADV_CTRL (C++ 枚举子), 305
ESP_AVRC_FEAT_BROWSE (C++ 枚举子), 305
ESP_AVRC_FEAT_META_DATA (C++ 枚举子), 305
ESP_AVRC_FEAT_RCCT (C++ 枚举子), 305
ESP_AVRC_FEAT_RCTG (C++ 枚举子), 305

ESP_AVRC_FEAT_VENDOR (C++ 枚举子), 305
esp_avrc_features_t (C++ 类型), 305
ESP_AVRC_MD_ATTR_ALBUM (C++ 枚举子), 307
ESP_AVRC_MD_ATTR_ARTIST (C++ 枚举子), 307
ESP_AVRC_MD_ATTR_GENRE (C++ 枚举子), 307
esp_avrc_md_attr_mask_t (C++ 类型), 306
ESP_AVRC_MD_ATTR_NUM_TRACKS (C++ 枚举子), 307
ESP_AVRC_MD_ATTR_PLAYING_TIME (C++ 枚举子), 307
ESP_AVRC_MD_ATTR_TITLE (C++ 枚举子), 306
ESP_AVRC_MD_ATTR_TRACK_NUM (C++ 枚举子), 307
esp_avrc_ps_attr_ids_t (C++ 类型), 307
esp_avrc_ps_eq_value_ids_t (C++ 类型), 308
ESP_AVRC_PS_EQUALIZER (C++ 枚举子), 308
ESP_AVRC_PS_EQUALIZER_OFF (C++ 枚举子), 308
ESP_AVRC_PS_EQUALIZER_ON (C++ 枚举子), 308
ESP_AVRC_PS_MAX_ATTR (C++ 枚举子), 308
ESP_AVRC_PS_REPEAT_GROUP (C++ 枚举子), 308
ESP_AVRC_PS_REPEAT_MODE (C++ 枚举子), 308
ESP_AVRC_PS_REPEAT_OFF (C++ 枚举子), 308
ESP_AVRC_PS_REPEAT_SINGLE (C++ 枚举子), 308
esp_avrc_ps_rpt_value_ids_t (C++ 类型), 308
ESP_AVRC_PS_SCAN_ALL (C++ 枚举子), 309
ESP_AVRC_PS_SCAN_GROUP (C++ 枚举子), 309
ESP_AVRC_PS_SCAN_MODE (C++ 枚举子), 308
ESP_AVRC_PS_SCAN_OFF (C++ 枚举子), 309
esp_avrc_ps_scn_value_ids_t (C++ 类型), 308
esp_avrc_ps_shf_value_ids_t (C++ 类型), 308
ESP_AVRC_PS_SHUFFLE_ALL (C++ 枚举子), 308
ESP_AVRC_PS_SHUFFLE_GROUP (C++ 枚举子), 308
ESP_AVRC_PS_SHUFFLE_MODE (C++ 枚举子), 308
ESP_AVRC_PS_SHUFFLE_OFF (C++ 枚举子), 308
ESP_AVRC_PT_CMD_BACKWARD (C++ 枚举子), 306
ESP_AVRC_PT_CMD_FAST_FORWARD (C++ 枚举子), 306
ESP_AVRC_PT_CMD_FORWARD (C++ 枚举子), 306
ESP_AVRC_PT_CMD_PAUSE (C++ 枚举子), 305
ESP_AVRC_PT_CMD_PLAY (C++ 枚举子), 305
ESP_AVRC_PT_CMD_REWIND (C++ 枚举子), 306
ESP_AVRC_PT_CMD_STATE_PRESSED (C++ 枚举子), 306
ESP_AVRC_PT_CMD_STATE_RELEASED (C++ 枚举子), 306
esp_avrc_pt_cmd_state_t (C++ 类型), 306
ESP_AVRC_PT_CMD_STOP (C++ 枚举子), 305
esp_avrc_pt_cmd_t (C++ 类型), 305
ESP_AVRC_RN_APP_SETTING_CHANGE (C++ 枚举子), 307
ESP_AVRC_RN_BATTERY_STATUS_CHANGE (C++ 枚举子), 307
esp_avrc_rn_event_ids_t (C++ 类型), 307
ESP_AVRC_RN_MAX_EVT (C++ 枚举子), 307
ESP_AVRC_RN_PLAY_POS_CHANGED (C++ 枚举子), 307
ESP_AVRC_RN_PLAY_STATUS_CHANGE (C++ 枚举子), 307
ESP_AVRC_RN_SYSTEM_STATUS_CHANGE (C++ 枚举子), 307
ESP_AVRC_RN_TRACK_CHANGE (C++ 枚举子), 307
ESP_AVRC_RN_TRACK_REACHED_END (C++ 枚举子), 307
ESP_AVRC_RN_TRACK_REACHED_START (C++ 枚举子), 307
esp_base_mac_addr_get (C++ 函数), 1599
esp_base_mac_addr_set (C++ 函数), 1599
ESP_BD_ADDR_HEX (C 宏), 165
ESP_BD_ADDR_LEN (C 宏), 165
ESP_BD_ADDR_STR (C 宏), 165
esp_bd_addr_t (C++ 类型), 165
ESP_BLE_AD_MANUFACTURER_SPECIFIC_TYPE (C++ 枚举子), 201
ESP_BLE_AD_TYPE_128SERVICE_DATA (C++ 枚举子), 200
ESP_BLE_AD_TYPE_128SOL_SRV_UUID (C++ 枚举子), 200
ESP_BLE_AD_TYPE_128SRV_CMPL (C++ 枚举子), 200
ESP_BLE_AD_TYPE_128SRV_PART (C++ 枚举子), 200
ESP_BLE_AD_TYPE_16SRV_CMPL (C++ 枚举子), 200
ESP_BLE_AD_TYPE_16SRV_PART (C++ 枚举子), 200
ESP_BLE_AD_TYPE_32SERVICE_DATA (C++ 枚举子), 200
ESP_BLE_AD_TYPE_32SOL_SRV_UUID (C++ 枚举子), 200
ESP_BLE_AD_TYPE_32SRV_CMPL (C++ 枚举子), 200

ESP_BLE_AD_TYPE_32SRV_PART (C++ 枚举子), 200
ESP_BLE_AD_TYPE_ADV_INT (C++ 枚举子), 200
ESP_BLE_AD_TYPE_APPEARANCE (C++ 枚举子), 200
ESP_BLE_AD_TYPE_CHAN_MAP_UPDATE (C++ 枚举子), 201
ESP_BLE_AD_TYPE_DEV_CLASS (C++ 枚举子), 200
ESP_BLE_AD_TYPE_FLAG (C++ 枚举子), 200
ESP_BLE_AD_TYPE_INDOOR_POSITION (C++ 枚举子), 201
ESP_BLE_AD_TYPE_INT_RANGE (C++ 枚举子), 200
ESP_BLE_AD_TYPE_LE_DEV_ADDR (C++ 枚举子), 200
ESP_BLE_AD_TYPE_LE_ROLE (C++ 枚举子), 200
ESP_BLE_AD_TYPE_LE_SECURE_CONFIRM (C++ 枚举子), 200
ESP_BLE_AD_TYPE_LE_SECURE_RANDOM (C++ 枚举子), 200
ESP_BLE_AD_TYPE_LE_SUPPORT_FEATURE (C++ 枚举子), 201
ESP_BLE_AD_TYPE_NAME_CMPL (C++ 枚举子), 200
ESP_BLE_AD_TYPE_NAME_SHORT (C++ 枚举子), 200
ESP_BLE_AD_TYPE_PUBLIC_TARGET (C++ 枚举子), 200
ESP_BLE_AD_TYPE_RANDOM_TARGET (C++ 枚举子), 200
ESP_BLE_AD_TYPE_SERVICE_DATA (C++ 枚举子), 200
ESP_BLE_AD_TYPE_SM_OOB_FLAG (C++ 枚举子), 200
ESP_BLE_AD_TYPE_SM_TK (C++ 枚举子), 200
ESP_BLE_AD_TYPE_SOL_SRV_UUID (C++ 枚举子), 200
ESP_BLE_AD_TYPE_SPAIR_C256 (C++ 枚举子), 200
ESP_BLE_AD_TYPE_SPAIR_R256 (C++ 枚举子), 200
ESP_BLE_AD_TYPE_TRANS_DISC_DATA (C++ 枚举子), 201
ESP_BLE_AD_TYPE_TX_PWR (C++ 枚举子), 200
ESP_BLE_AD_TYPE_URI (C++ 枚举子), 201
esp_ble_addr_type_t (C++ 类型), 166
esp_ble_adv_channel_t (C++ 类型), 201
ESP_BLE_ADV_DATA_LEN_MAX (C 宏), 197
esp_ble_adv_data_t (C++ 类), 188
esp_ble_adv_data_t::appearance (C++ 成员), 188
esp_ble_adv_data_t::flag (C++ 成员), 189
esp_ble_adv_data_t::include_name (C++ 成员), 188
esp_ble_adv_data_t::include_txpower (C++ 成员), 188
esp_ble_adv_data_t::manufacturer_len (C++ 成员), 188
esp_ble_adv_data_t::max_interval (C++ 成员), 188
esp_ble_adv_data_t::min_interval (C++ 成员), 188
esp_ble_adv_data_t::p_manufacturer_data (C++ 成员), 188
esp_ble_adv_data_t::p_service_data (C++ 成员), 189
esp_ble_adv_data_t::p_service_uuid (C++ 成员), 189
esp_ble_adv_data_t::service_data_len (C++ 成员), 188
esp_ble_adv_data_t::service_uuid_len (C++ 成员), 189
esp_ble_adv_data_t::set_scan_rsp (C++ 成员), 188
esp_ble_adv_data_type (C++ 类型), 199
esp_ble_adv_filter_t (C++ 类型), 201
ESP_BLE_ADV_FLAG_BREDR_NOT_SPT (C 宏), 194
ESP_BLE_ADV_FLAG_DMT_CONTROLLER_SPT (C 宏), 194
ESP_BLE_ADV_FLAG_DMT_HOST_SPT (C 宏), 194
ESP_BLE_ADV_FLAG_GEN_DISC (C 宏), 194
ESP_BLE_ADV_FLAG_LIMIT_DISC (C 宏), 194
ESP_BLE_ADV_FLAG_NON_LIMIT_DISC (C 宏), 194
esp_ble_adv_params_t (C++ 类), 187
esp_ble_adv_params_t::adv_filter_policy (C++ 成员), 188
esp_ble_adv_params_t::adv_int_max (C++ 成员), 187
esp_ble_adv_params_t::adv_int_min (C++ 成员), 187
esp_ble_adv_params_t::adv_type (C++ 成员), 187
esp_ble_adv_params_t::channel_map (C++ 成

员), 188
esp_ble_adv_params_t::own_addr_type (C++ 成员), 187
esp_ble_adv_params_t::peer_addr (C++ 成员), 187
esp_ble_adv_params_t::peer_addr_type (C++ 成员), 188
esp_ble_adv_type_t (C++ 类型), 201
ESP_BLE_APP_ENC_KEY_SIZE (C++ 枚举子), 202
ESP_BLE_APPEARANCE_BLOOD_PRESSURE_ARM (C 宏), 196
ESP_BLE_APPEARANCE_BLOOD_PRESSURE_WRIST (C 宏), 196
ESP_BLE_APPEARANCE_CYCLING_CADENCE (C 宏), 196
ESP_BLE_APPEARANCE_CYCLING_COMPUTER (C 宏), 196
ESP_BLE_APPEARANCE_CYCLING_POWER (C 宏), 197
ESP_BLE_APPEARANCE_CYCLING_SPEED (C 宏), 196
ESP_BLE_APPEARANCE_CYCLING_SPEED_CADENCE (C 宏), 197
ESP_BLE_APPEARANCE_GENERIC_BARCODE_SCANNER (C 宏), 196
ESP_BLE_APPEARANCE_GENERIC_BLOOD_PRESSURE (C 宏), 196
ESP_BLE_APPEARANCE_GENERIC_CLOCK (C 宏), 195
ESP_BLE_APPEARANCE_GENERIC_COMPUTER (C 宏), 195
ESP_BLE_APPEARANCE_GENERIC_CONTINUOUS_GLUCOSE_MONITOR (C 宏), 197
ESP_BLE_APPEARANCE_GENERIC_CYCLING (C 宏), 196
ESP_BLE_APPEARANCE_GENERIC_DISPLAY (C 宏), 195
ESP_BLE_APPEARANCE_GENERIC_EYEGLASSES (C 宏), 196
ESP_BLE_APPEARANCE_GENERIC_GLUCOSE (C 宏), 196
ESP_BLE_APPEARANCE_GENERIC_HEART_RATE (C 宏), 196
ESP_BLE_APPEARANCE_GENERIC_HID (C 宏), 196
ESP_BLE_APPEARANCE_GENERIC_INSULIN_PUMP (C 宏), 197
ESP_BLE_APPEARANCE_GENERIC_KEYRING (C 宏), 196
ESP_BLE_APPEARANCE_GENERIC_MEDIA_PLAYER (C 宏), 196
ESP_BLE_APPEARANCE_GENERIC_MEDICATION_DELIVERY (C 宏), 197
ESP_BLE_APPEARANCE_GENERIC_OUTDOOR_SPORTS (C 宏), 197
ESP_BLE_APPEARANCE_GENERIC_PERSONAL_MOBILITY_DEVICE (C 宏), 197
ESP_BLE_APPEARANCE_GENERIC_PHONE (C 宏), 195
ESP_BLE_APPEARANCE_GENERIC_PULSE_OXIMETER (C 宏), 197
ESP_BLE_APPEARANCE_GENERIC_REMOTE (C 宏), 195
ESP_BLE_APPEARANCE_GENERIC_TAG (C 宏), 196
ESP_BLE_APPEARANCE_GENERIC_THERMOMETER (C 宏), 196
ESP_BLE_APPEARANCE_GENERIC_WALKING (C 宏), 196
ESP_BLE_APPEARANCE_GENERIC_WATCH (C 宏), 195
ESP_BLE_APPEARANCE_GENERIC_WEIGHT (C 宏), 197
ESP_BLE_APPEARANCE_HEART_RATE_BELT (C 宏), 196
ESP_BLE_APPEARANCE_HID_BARCODE_SCANNER (C 宏), 196
ESP_BLE_APPEARANCE_HID_CARD_READER (C 宏), 196
ESP_BLE_APPEARANCE_HID_DIGITAL_PEN (C 宏), 196
ESP_BLE_APPEARANCE_HID_DIGITIZER_TABLET (C 宏), 196
ESP_BLE_APPEARANCE_HID_GAMEPAD (C 宏), 196
ESP_BLE_APPEARANCE_HID_JOYSTICK (C 宏), 196
ESP_BLE_APPEARANCE_HID_KEYBOARD (C 宏), 196
ESP_BLE_APPEARANCE_HID_MOUSE (C 宏), 196
ESP_BLE_APPEARANCE_INSULIN_PEN (C 宏), 197
ESP_BLE_APPEARANCE_INSULIN_PUMP_DURABLE_PUMP (C 宏), 197
ESP_BLE_APPEARANCE_INSULIN_PUMP_PATCH_PUMP (C 宏), 197
ESP_BLE_APPEARANCE_MOBILITY_SCOOTER (C 宏), 197
ESP_BLE_APPEARANCE_OUTDOOR_SPORTS_LOCATION (C 宏), 197
ESP_BLE_APPEARANCE_OUTDOOR_SPORTS_LOCATION_AND_NAV (C 宏), 197
ESP_BLE_APPEARANCE_OUTDOOR_SPORTS_LOCATION_POD (C 宏), 197
ESP_BLE_APPEARANCE_OUTDOOR_SPORTS_LOCATION_POD_AND_NAV (C 宏), 197

ESP_BLE_APPEARANCE_POWERED_WHEELCHAIR (C 宏), 197
ESP_BLE_APPEARANCE_PULSE_OXIMETER_FINGERTIP (C 宏), 197
ESP_BLE_APPEARANCE_PULSE_OXIMETER_WRIST (C 宏), 197
ESP_BLE_APPEARANCE_SPORTS_WATCH (C 宏), 195
ESP_BLE_APPEARANCE_THERMOMETER_EAR (C 宏), 196
ESP_BLE_APPEARANCE_UNKNOWN (C 宏), 195
ESP_BLE_APPEARANCE_WALKING_IN_SHOE (C 宏), 196
ESP_BLE_APPEARANCE_WALKING_ON_HIP (C 宏), 196
ESP_BLE_APPEARANCE_WALKING_ON_SHOE (C 宏), 196
esp_ble_auth_cmpl_t (C++ 类), 193
esp_ble_auth_cmpl_t::addr_type (C++ 成员), 194
esp_ble_auth_cmpl_t::auth_mode (C++ 成员), 194
esp_ble_auth_cmpl_t::bd_addr (C++ 成员), 194
esp_ble_auth_cmpl_t::dev_type (C++ 成员), 194
esp_ble_auth_cmpl_t::fail_reason (C++ 成员), 194
esp_ble_auth_cmpl_t::key (C++ 成员), 194
esp_ble_auth_cmpl_t::key_present (C++ 成员), 194
esp_ble_auth_cmpl_t::key_type (C++ 成员), 194
esp_ble_auth_cmpl_t::success (C++ 成员), 194
esp_ble_auth_req_t (C++ 类型), 197
esp_ble_bond_dev_t (C++ 类), 193
esp_ble_bond_dev_t::bd_addr (C++ 成员), 193
esp_ble_bond_dev_t::bond_key (C++ 成员), 193
esp_ble_bond_key_info_t (C++ 类), 192
esp_ble_bond_key_info_t::key_mask (C++ 成员), 192
esp_ble_bond_key_info_t::pcsrk_key (C++ 成员), 192
esp_ble_bond_key_info_t::penc_key (C++ 成员), 192
esp_ble_bond_key_info_t::pid_key (C++ 成员), 192
esp_ble_confirm_reply (C++ 函数), 178
ESP_BLE_CONN_INT_MAX (C 宏), 164
ESP_BLE_CONN_INT_MIN (C 宏), 164
ESP_BLE_CONN_LATENCY_MAX (C 宏), 164
ESP_BLE_CONN_PARAM_UNDEF (C 宏), 164
ESP_BLE_CONN_SUP_TOUT_MAX (C 宏), 164
ESP_BLE_CONN_SUP_TOUT_MIN (C 宏), 164
esp_ble_conn_update_params_t (C++ 类), 189
esp_ble_conn_update_params_t::bda (C++ 成员), 190
esp_ble_conn_update_params_t::latency (C++ 成员), 190
esp_ble_conn_update_params_t::max_int (C++ 成员), 190
esp_ble_conn_update_params_t::min_int (C++ 成员), 190
esp_ble_conn_update_params_t::timeout (C++ 成员), 190
ESP_BLE_CSR_KEY_MASK (C 宏), 165
esp_ble_duplicate_exceptional_info_type_t (C++ 类型), 205
ESP_BLE_DUPLICATE_EXCEPTIONAL_LIST_ADD (C++ 枚举子), 204
ESP_BLE_DUPLICATE_EXCEPTIONAL_LIST_CLEAN (C++ 枚举子), 205
ESP_BLE_DUPLICATE_EXCEPTIONAL_LIST_REMOVE (C++ 枚举子), 204
ESP_BLE_DUPLICATE_SCAN_EXCEPTIONAL_ADDR_LIST (C++ 枚举子), 205
ESP_BLE_DUPLICATE_SCAN_EXCEPTIONAL_ALL_LIST (C++ 枚举子), 205
ESP_BLE_DUPLICATE_SCAN_EXCEPTIONAL_INFO_ADV_ADDR (C++ 枚举子), 205
ESP_BLE_DUPLICATE_SCAN_EXCEPTIONAL_INFO_MESH_BEACON_TYPE (C++ 枚举子), 205
ESP_BLE_DUPLICATE_SCAN_EXCEPTIONAL_INFO_MESH_LINK_ID (C++ 枚举子), 205
ESP_BLE_DUPLICATE_SCAN_EXCEPTIONAL_INFO_MESH_PROV_SRV_ADV (C++ 枚举子), 205
ESP_BLE_DUPLICATE_SCAN_EXCEPTIONAL_INFO_MESH_PROXY_SRV_ADV (C++ 枚举子), 205
ESP_BLE_DUPLICATE_SCAN_EXCEPTIONAL_MESH_BEACON_TYPE_LIST (C++ 枚举子), 205
ESP_BLE_DUPLICATE_SCAN_EXCEPTIONAL_MESH_LINK_ID_LIST (C++ 枚举子), 205

ESP_BLE_DUPLICATE_SCAN_EXCEPTIONAL_MESH_PROV_SERV_ADV_LIST (C++ 枚举子), 205
ESP_BLE_DUPLICATE_SCAN_EXCEPTIONAL_MESH_PROXY_SERV_ADV_LIST (C++ 枚举子), 205
ESP_BLE_ENC_KEY_MASK (C 宏), 165
ESP_BLE_EVT_CONN_ADV (C++ 枚举子), 204
ESP_BLE_EVT_CONN_DIR_ADV (C++ 枚举子), 204
ESP_BLE_EVT_DISC_ADV (C++ 枚举子), 204
ESP_BLE_EVT_NON_CONN_ADV (C++ 枚举子), 204
ESP_BLE_EVT_SCAN_RSP (C++ 枚举子), 204
esp_ble_evt_type_t (C++ 类型), 204
esp_ble_gap_add_duplicate_scan_exceptional_device (C++ 函数), 176
esp_ble_gap_cb_param_t (C++ 类型), 180
esp_ble_gap_cb_param_t::adv_data_cmpl (C++ 成员), 181
esp_ble_gap_cb_param_t::adv_data_raw_cmpl (C++ 成员), 181
esp_ble_gap_cb_param_t::adv_start_cmpl (C++ 成员), 181
esp_ble_gap_cb_param_t::adv_stop_cmpl (C++ 成员), 181
esp_ble_gap_cb_param_t::ble_adv_data_cmpl_evt_param (C++ 类), 182
esp_ble_gap_cb_param_t::ble_adv_data_cmpl_evt_param::status (C++ 成员), 182
esp_ble_gap_cb_param_t::ble_adv_data_raw_cmpl_evt_param (C++ 类), 182
esp_ble_gap_cb_param_t::ble_adv_data_raw_cmpl_evt_param::status (C++ 成员), 182
esp_ble_gap_cb_param_t::ble_adv_start_cmpl_evt_param (C++ 类), 182
esp_ble_gap_cb_param_t::ble_adv_start_cmpl_evt_param::status (C++ 成员), 182
esp_ble_gap_cb_param_t::ble_adv_stop_cmpl_evt_param (C++ 类), 182
esp_ble_gap_cb_param_t::ble_adv_stop_cmpl_evt_param::status (C++ 成员), 182
esp_ble_gap_cb_param_t::ble_clear_bond_dev_cmpl_evt_param (C++ 类), 182
esp_ble_gap_cb_param_t::ble_clear_bond_dev_cmpl_evt_param::status (C++ 成员), 183
esp_ble_gap_cb_param_t::ble_get_bond_dev_cmpl_evt_param (C++ 类), 183
esp_ble_gap_cb_param_t::ble_get_bond_dev_cmpl_evt_param::b (C++ 成员), 183
esp_ble_gap_cb_param_t::ble_get_bond_dev_cmpl_evt_param::d (C++ 成员), 183
esp_ble_gap_cb_param_t::ble_get_bond_dev_cmpl_evt_param::s (C++ 成员), 183
esp_ble_gap_cb_param_t::ble_local_privacy_cmpl_evt_param (C++ 类), 183
esp_ble_gap_cb_param_t::ble_local_privacy_cmpl_evt_param:: (C++ 成员), 183
esp_ble_gap_cb_param_t::ble_pkt_data_length_cmpl_evt_param (C++ 类), 183
esp_ble_gap_cb_param_t::ble_pkt_data_length_cmpl_evt_param (C++ 成员), 183
esp_ble_gap_cb_param_t::ble_pkt_data_length_cmpl_evt_param (C++ 成员), 183
esp_ble_gap_cb_param_t::ble_read_rssi_cmpl_evt_param (C++ 类), 183
esp_ble_gap_cb_param_t::ble_read_rssi_cmpl_evt_param::remo (C++ 成员), 184
esp_ble_gap_cb_param_t::ble_read_rssi_cmpl_evt_param::rssi (C++ 成员), 183
esp_ble_gap_cb_param_t::ble_read_rssi_cmpl_evt_param::stat (C++ 成员), 183
esp_ble_gap_cb_param_t::ble_remove_bond_dev_cmpl_evt_param (C++ 类), 184
esp_ble_gap_cb_param_t::ble_remove_bond_dev_cmpl_evt_param (C++ 成员), 184
esp_ble_gap_cb_param_t::ble_remove_bond_dev_cmpl_evt_param (C++ 成员), 184
esp_ble_gap_cb_param_t::ble_scan_param_cmpl_evt_param (C++ 类), 184
esp_ble_gap_cb_param_t::ble_scan_param_cmpl_evt_param::sta (C++ 成员), 184
esp_ble_gap_cb_param_t::ble_scan_result_evt_param (C++ 类), 184
esp_ble_gap_cb_param_t::ble_scan_result_evt_param::adv_dat (C++ 成员), 185
esp_ble_gap_cb_param_t::ble_scan_result_evt_param::bda (C++ 成员), 184

esp_ble_gap_cb_param_t::ble_scan_result_evt_param::ble_addr_type (C++ 成员), 184
esp_ble_gap_cb_param_t::ble_scan_result_evt_param::ble_adv (C++ 成员), 185
esp_ble_gap_cb_param_t::ble_scan_result_evt_param::ble_evt_type (C++ 成员), 184
esp_ble_gap_cb_param_t::ble_scan_result_evt_param::dev_type (C++ 成员), 184
esp_ble_gap_cb_param_t::ble_scan_result_evt_param::flag (C++ 成员), 185
esp_ble_gap_cb_param_t::ble_scan_result_evt_param::num_resps (C++ 成员), 185
esp_ble_gap_cb_param_t::ble_scan_result_evt_param::rssi (C++ 成员), 184
esp_ble_gap_cb_param_t::ble_scan_result_evt_param::scan_rsp_len (C++ 成员), 185
esp_ble_gap_cb_param_t::ble_scan_result_evt_param::search_evt (C++ 成员), 184
esp_ble_gap_cb_param_t::ble_scan_rsp_data_cmpl_evt_param (C++ 类), 185
esp_ble_gap_cb_param_t::ble_scan_rsp_data_cmpl_evt_param::status (C++ 成员), 185
esp_ble_gap_cb_param_t::ble_scan_rsp_data_raw_cmpl_evt_param (C++ 类), 185
esp_ble_gap_cb_param_t::ble_scan_rsp_data_raw_cmpl_evt_param::status (C++ 成员), 185
esp_ble_gap_cb_param_t::ble_scan_start_cmpl_evt_param (C++ 类), 185
esp_ble_gap_cb_param_t::ble_scan_start_cmpl_evt_param::status (C++ 成员), 185
esp_ble_gap_cb_param_t::ble_scan_stop_cmpl_evt_param (C++ 类), 185
esp_ble_gap_cb_param_t::ble_scan_stop_cmpl_evt_param::status (C++ 成员), 186
esp_ble_gap_cb_param_t::ble_security (C++ 成员), 181
esp_ble_gap_cb_param_t::ble_set_rand_cmpl_evt_param (C++ 类), 186
esp_ble_gap_cb_param_t::ble_set_rand_cmpl_evt_param::status (C++ 成员), 186
esp_ble_gap_cb_param_t::ble_update_conn_params_evt_param (C++ 类), 186
esp_ble_gap_cb_param_t::ble_update_conn_params_evt_param::addr (C++ 成员), 186
esp_ble_gap_cb_param_t::ble_update_conn_params_evt_param::conn_int (C++ 成员), 186
esp_ble_gap_cb_param_t::ble_update_conn_params_evt_param::latency (C++ 成员), 186
esp_ble_gap_cb_param_t::ble_update_conn_params_evt_param::min_int (C++ 成员), 186
esp_ble_gap_cb_param_t::ble_update_conn_params_evt_param::status (C++ 成员), 186
esp_ble_gap_cb_param_t::ble_update_conn_params_evt_param::timeout (C++ 成员), 186
esp_ble_gap_cb_param_t::ble_update_duplicate_exceptional_list_cmpl_evt_param (C++ 类), 186
esp_ble_gap_cb_param_t::ble_update_duplicate_exceptional_list_cmpl_evt_param::action (C++ 成员), 187
esp_ble_gap_cb_param_t::ble_update_duplicate_exceptional_list_cmpl_evt_param::duplicate_exceptional_info (C++ 成员), 187
esp_ble_gap_cb_param_t::ble_update_duplicate_exceptional_list_cmpl_evt_param::status (C++ 成员), 186
esp_ble_gap_cb_param_t::ble_update_duplicate_exceptional_list_cmpl_evt_param::type (C++ 成员), 186
esp_ble_gap_cb_param_t::ble_update_whitelist_cmpl_evt_param (C++ 类), 187
esp_ble_gap_cb_param_t::ble_update_whitelist_cmpl_evt_param::operation (C++ 成员), 187
esp_ble_gap_cb_param_t::ble_update_whitelist_cmpl_evt_param::status (C++ 成员), 187
esp_ble_gap_cb_param_t::clear_bond_dev_cmpl (C++ 成员), 181
esp_ble_gap_cb_param_t::get_bond_dev_cmpl (C++ 成员), 182
esp_ble_gap_cb_param_t::local_privacy_cmpl (C++ 成员), 181
esp_ble_gap_cb_param_t::pkt_data_lenth_cmpl (C++ 成员), 181
esp_ble_gap_cb_param_t::read_rssi_cmpl (C++ 成员), 182

esp_ble_gap_cb_param_t::remove_bond_dev_cmpl (C++ 成员), 181
esp_ble_gap_cb_param_t::scan_param_cmpl (C++ 成员), 181
esp_ble_gap_cb_param_t::scan_rsp_data_cmpl (C++ 成员), 181
esp_ble_gap_cb_param_t::scan_rsp_data_raw_cmpl (C++ 成员), 181
esp_ble_gap_cb_param_t::scan_rst (C++ 成员), 181
esp_ble_gap_cb_param_t::scan_start_cmpl (C++ 成员), 181
esp_ble_gap_cb_param_t::scan_stop_cmpl (C++ 成员), 181
esp_ble_gap_cb_param_t::set_rand_addr_cmpl (C++ 成员), 181
esp_ble_gap_cb_param_t::update_conn_params (C++ 成员), 181
esp_ble_gap_cb_param_t::update_duplicate_exceptional_list_cmpl (C++ 成员), 182
esp_ble_gap_cb_param_t::update_whitelist_cmpl (C++ 成员), 182
esp_ble_gap_clean_duplicate_scan_exceptional_list (C++ 函数), 176
esp_ble_gap_clear_rand_addr (C++ 函数), 172
esp_ble_gap_config_adv_data (C++ 函数), 170
esp_ble_gap_config_adv_data_raw (C++ 函数), 175
esp_ble_gap_config_local_icon (C++ 函数), 173
esp_ble_gap_config_local_privacy (C++ 函数), 172
esp_ble_gap_config_scan_rsp_data_raw (C++ 函数), 175
esp_ble_gap_disconnect (C++ 函数), 179
esp_ble_gap_get_local_used_addr (C++ 函数), 174
esp_ble_gap_get_whitelist_size (C++ 函数), 173
esp_ble_gap_read_rssi (C++ 函数), 175
esp_ble_gap_register_callback (C++ 函数), 170
esp_ble_gap_remove_duplicate_scan_exceptional_device (C++ 函数), 176
esp_ble_gap_security_rsp (C++ 函数), 177
esp_ble_gap_set_device_name (C++ 函数), 174
esp_ble_gap_set_pkt_data_len (C++ 函数), 172
esp_ble_gap_set_prefer_conn_params (C++ 函数), 173
esp_ble_gap_set_rand_addr (C++ 函数), 172
esp_ble_gap_set_scan_params (C++ 函数), 171
esp_ble_gap_set_security_param (C++ 函数), 177
esp_ble_gap_start_advertising (C++ 函数), 171
esp_ble_gap_start_scanning (C++ 函数), 171
esp_ble_gap_stop_advertising (C++ 函数), 171
esp_ble_gap_stop_scanning (C++ 函数), 171
esp_ble_gap_update_conn_params (C++ 函数), 172
esp_ble_gap_update_whitelist (C++ 函数), 173
esp_ble_gattc_app_register (C++ 函数), 237
esp_ble_gattc_app_unregister (C++ 函数), 237
esp_ble_gattc_cache_assoc (C++ 函数), 249
esp_ble_gattc_cache_get_addr_list (C++ 函数), 249
esp_ble_gattc_cache_refresh (C++ 函数), 249
esp_ble_gattc_cb_param_t (C++ 类型), 250
esp_ble_gattc_cb_param_t::cfg_mtu (C++ 成员), 250
esp_ble_gattc_cb_param_t::close (C++ 成员), 250
esp_ble_gattc_cb_param_t::congest (C++ 成员), 250
esp_ble_gattc_cb_param_t::connect (C++ 成员), 251
esp_ble_gattc_cb_param_t::disconnect (C++ 成员), 251
esp_ble_gattc_cb_param_t::exec_cmpl (C++ 成员), 250
esp_ble_gattc_cb_param_t::gattc_cfg_mtu_evt_param (C++ 类), 251
esp_ble_gattc_cb_param_t::gattc_cfg_mtu_evt_param::conn_id (C++ 成员), 251
esp_ble_gattc_cb_param_t::gattc_cfg_mtu_evt_param::mtu
esp_ble_gattc_cb_param_t::gattc_cfg_mtu_evt_param::status

(C++ 成员), 251
esp_ble_gattc_cb_param_t::gattc_close_evt_param (C++ 类), 251
esp_ble_gattc_cb_param_t::gattc_close_evt_param::conn_id (C++ 成员), 251
esp_ble_gattc_cb_param_t::gattc_close_evt_param::reason (C++ 成员), 252
esp_ble_gattc_cb_param_t::gattc_close_evt_param::remote_bda (C++ 成员), 251
esp_ble_gattc_cb_param_t::gattc_close_evt_param::status (C++ 成员), 251
esp_ble_gattc_cb_param_t::gattc_congest_evt_param (C++ 类), 252
esp_ble_gattc_cb_param_t::gattc_congest_evt_param::congested (C++ 成员), 252
esp_ble_gattc_cb_param_t::gattc_congest_evt_param::conn_id (C++ 成员), 252
esp_ble_gattc_cb_param_t::gattc_connect_evt_param (C++ 类), 252
esp_ble_gattc_cb_param_t::gattc_connect_evt_param::conn_id (C++ 成员), 252
esp_ble_gattc_cb_param_t::gattc_connect_evt_param::remote_bda (C++ 成员), 252
esp_ble_gattc_cb_param_t::gattc_disconnect_evt_param (C++ 类), 252
esp_ble_gattc_cb_param_t::gattc_disconnect_evt_param::conn_id (C++ 成员), 252
esp_ble_gattc_cb_param_t::gattc_disconnect_evt_param::reason (C++ 成员), 252
esp_ble_gattc_cb_param_t::gattc_disconnect_evt_param::remote_bda (C++ 成员), 252
esp_ble_gattc_cb_param_t::gattc_exec_cmpl_evt_param (C++ 类), 252
esp_ble_gattc_cb_param_t::gattc_exec_cmpl_evt_param::conn_id (C++ 成员), 253
esp_ble_gattc_cb_param_t::gattc_exec_cmpl_evt_param::status (C++ 成员), 253
esp_ble_gattc_cb_param_t::gattc_get_addr_list_evt_param (C++ 类), 253
esp_ble_gattc_cb_param_t::gattc_get_addr_list_evt_param::addr_list (C++ 成员), 253
esp_ble_gattc_cb_param_t::gattc_get_addr_list_evt_param::count (C++ 成员), 253
esp_ble_gattc_cb_param_t::gattc_get_addr_list_evt_param::status (C++ 成员), 253
esp_ble_gattc_cb_param_t::gattc_notify_evt_param (C++ 类), 253
esp_ble_gattc_cb_param_t::gattc_notify_evt_param::conn_id (C++ 成员), 253
esp_ble_gattc_cb_param_t::gattc_notify_evt_param::handle (C++ 成员), 253
esp_ble_gattc_cb_param_t::gattc_notify_evt_param::is_notify (C++ 成员), 253
esp_ble_gattc_cb_param_t::gattc_notify_evt_param::remote_bda (C++ 成员), 253
esp_ble_gattc_cb_param_t::gattc_notify_evt_param::value (C++ 成员), 253
esp_ble_gattc_cb_param_t::gattc_notify_evt_param::value_len (C++ 成员), 253
esp_ble_gattc_cb_param_t::gattc_open_evt_param (C++ 类), 253
esp_ble_gattc_cb_param_t::gattc_open_evt_param::conn_id (C++ 成员), 254
esp_ble_gattc_cb_param_t::gattc_open_evt_param::mtu (C++ 成员), 254
esp_ble_gattc_cb_param_t::gattc_open_evt_param::remote_bda (C++ 成员), 254
esp_ble_gattc_cb_param_t::gattc_open_evt_param::status (C++ 成员), 254
esp_ble_gattc_cb_param_t::gattc_queue_full_evt_param (C++ 类), 254
esp_ble_gattc_cb_param_t::gattc_queue_full_evt_param::conn_id (C++ 成员), 254
esp_ble_gattc_cb_param_t::gattc_queue_full_evt_param::is_full (C++ 成员), 254
esp_ble_gattc_cb_param_t::gattc_queue_full_evt_param::status (C++ 成员), 254
esp_ble_gattc_cb_param_t::gattc_read_char_evt_param (C++ 类), 254
esp_ble_gattc_cb_param_t::gattc_read_char_evt_param::conn_id (C++ 成员), 254
esp_ble_gattc_cb_param_t::gattc_read_char_evt_param::handle (C++ 成员), 254
esp_ble_gattc_cb_param_t::gattc_read_char_evt_param::status

(C++ 成员), 254
esp_ble_gattc_cb_param_t::gattc_read_char_evt_param::value (C++ 成员), 254
esp_ble_gattc_cb_param_t::gattc_read_char_evt_param::value_len (C++ 成员), 254
esp_ble_gattc_cb_param_t::gattc_reg_evt_param (C++ 类), 254
esp_ble_gattc_cb_param_t::gattc_reg_evt_param::app_id (C++ 成员), 255
esp_ble_gattc_cb_param_t::gattc_reg_evt_param::status (C++ 成员), 255
esp_ble_gattc_cb_param_t::gattc_reg_for_notify_evt_param (C++ 类), 255
esp_ble_gattc_cb_param_t::gattc_reg_for_notify_evt_param::handle (C++ 成员), 255
esp_ble_gattc_cb_param_t::gattc_reg_for_notify_evt_param::status (C++ 成员), 255
esp_ble_gattc_cb_param_t::gattc_search_cmpl_evt_param (C++ 类), 255
esp_ble_gattc_cb_param_t::gattc_search_cmpl_evt_param::conn_id (C++ 成员), 255
esp_ble_gattc_cb_param_t::gattc_search_cmpl_evt_param::searched_service_source (C++ 成员), 255
esp_ble_gattc_cb_param_t::gattc_search_cmpl_evt_param::status (C++ 成员), 255
esp_ble_gattc_cb_param_t::gattc_search_res_evt_param (C++ 类), 255
esp_ble_gattc_cb_param_t::gattc_search_res_evt_param::conn_id (C++ 成员), 255
esp_ble_gattc_cb_param_t::gattc_search_res_evt_param::end_handle (C++ 成员), 255
esp_ble_gattc_cb_param_t::gattc_search_res_evt_param::is_primary (C++ 成员), 256
esp_ble_gattc_cb_param_t::gattc_search_res_evt_param::srvc_id (C++ 成员), 256
esp_ble_gattc_cb_param_t::gattc_search_res_evt_param::start_handle (C++ 成员), 255
esp_ble_gattc_cb_param_t::gattc_set_assoc_addr_cmp_evt_param (C++ 类), 256
esp_ble_gattc_cb_param_t::gattc_set_assoc_addr_cmp_evt_param::status (C++ 成员), 256
esp_ble_gattc_cb_param_t::gattc_srvc_chg_evt_param (C++ 类), 256
esp_ble_gattc_cb_param_t::gattc_srvc_chg_evt_param::remote_bda (C++ 成员), 256
esp_ble_gattc_cb_param_t::gattc_unreg_for_notify_evt_param (C++ 类), 256
esp_ble_gattc_cb_param_t::gattc_unreg_for_notify_evt_param::app_id (C++ 成员), 256
esp_ble_gattc_cb_param_t::gattc_unreg_for_notify_evt_param::status (C++ 成员), 256
esp_ble_gattc_cb_param_t::gattc_write_evt_param (C++ 类), 256
esp_ble_gattc_cb_param_t::gattc_write_evt_param::conn_id (C++ 成员), 256
esp_ble_gattc_cb_param_t::gattc_write_evt_param::handle (C++ 成员), 257
esp_ble_gattc_cb_param_t::gattc_write_evt_param::offset (C++ 成员), 257
esp_ble_gattc_cb_param_t::gattc_write_evt_param::status (C++ 成员), 256
esp_ble_gattc_cb_param_t::get_addr_list (C++ 成员), 251
esp_ble_gattc_cb_param_t::open (C++ 成员), 250
esp_ble_gattc_cb_param_t::queue_full (C++ 成员), 251
esp_ble_gattc_cb_param_t::read (C++ 成员), 250
esp_ble_gattc_cb_param_t::reg (C++ 成员), 250
esp_ble_gattc_cb_param_t::reg_for_notify (C++ 成员), 251
esp_ble_gattc_cb_param_t::search_cmpl (C++ 成员), 250
esp_ble_gattc_cb_param_t::search_res (C++ 成员), 250
esp_ble_gattc_cb_param_t::set_assoc_cmp (C++ 成员), 251
esp_ble_gattc_cb_param_t::srvc_chg (C++ 成员), 250
esp_ble_gattc_cb_param_t::status
esp_ble_gattc_cb_param_t::unreg_for_notify (C++ 成员), 251

esp_ble_gattc_cb_param_t::write (C++ 成员), 250
esp_ble_gattc_close (C++ 函数), 238
esp_ble_gattc_execute_write (C++ 函数), 248
esp_ble_gattc_get_all_char (C++ 函数), 240
esp_ble_gattc_get_all_descr (C++ 函数), 240
esp_ble_gattc_get_attr_count (C++ 函数), 243
esp_ble_gattc_get_char_by_uuid (C++ 函数), 241
esp_ble_gattc_get_db (C++ 函数), 244
esp_ble_gattc_get_descr_by_char_handle (C++ 函数), 242
esp_ble_gattc_get_descr_by_uuid (C++ 函数), 241
esp_ble_gattc_get_include_service (C++ 函数), 242
esp_ble_gattc_get_service (C++ 函数), 239
esp_ble_gattc_open (C++ 函数), 238
esp_ble_gattc_prepare_write (C++ 函数), 247
esp_ble_gattc_prepare_write_char_descr (C++ 函数), 247
esp_ble_gattc_read_by_type (C++ 函数), 244
esp_ble_gattc_read_char (C++ 函数), 244
esp_ble_gattc_read_char_descr (C++ 函数), 245
esp_ble_gattc_read_multiple (C++ 函数), 245
esp_ble_gattc_register_callback (C++ 函数), 237
esp_ble_gattc_register_for_notify (C++ 函数), 248
esp_ble_gattc_search_service (C++ 函数), 239
esp_ble_gattc_send_mtu_req (C++ 函数), 238
esp_ble_gattc_unregister_for_notify (C++ 函数), 248
esp_ble_gattc_write_char (C++ 函数), 246
esp_ble_gattc_write_char_descr (C++ 函数), 246
esp_ble_gatts_add_char (C++ 函数), 221
esp_ble_gatts_add_char_descr (C++ 函数), 222
esp_ble_gatts_add_included_service (C++ 函数), 221
esp_ble_gatts_app_register (C++ 函数), 220
esp_ble_gatts_app_unregister (C++ 函数), 220
esp_ble_gatts_cb_param_t (C++ 类型), 226
esp_ble_gatts_cb_param_t::add_attr_tab (C++ 成员), 227
esp_ble_gatts_cb_param_t::add_char (C++ 成员), 226
esp_ble_gatts_cb_param_t::add_char_descr (C++ 成员), 226
esp_ble_gatts_cb_param_t::add_incl_srvc (C++ 成员), 226
esp_ble_gatts_cb_param_t::cancel_open (C++ 成员), 227
esp_ble_gatts_cb_param_t::close (C++ 成员), 227
esp_ble_gatts_cb_param_t::conf (C++ 成员), 226
esp_ble_gatts_cb_param_t::congest (C++ 成员), 227
esp_ble_gatts_cb_param_t::connect (C++ 成员), 226
esp_ble_gatts_cb_param_t::create (C++ 成员), 226
esp_ble_gatts_cb_param_t::del (C++ 成员), 226
esp_ble_gatts_cb_param_t::disconnect (C++ 成员), 226
esp_ble_gatts_cb_param_t::exec_write (C++ 成员), 226
esp_ble_gatts_cb_param_t::gatts_add_attr_tab_evt_param (C++ 类), 227
esp_ble_gatts_cb_param_t::gatts_add_attr_tab_evt_param::ha (C++ 成员), 227
esp_ble_gatts_cb_param_t::gatts_add_attr_tab_evt_param::nu (C++ 成员), 227
esp_ble_gatts_cb_param_t::gatts_add_attr_tab_evt_param::st (C++ 成员), 227
esp_ble_gatts_cb_param_t::gatts_add_attr_tab_evt_param::sv (C++ 成员), 227
esp_ble_gatts_cb_param_t::gatts_add_char_descr_evt_param (C++ 类), 227
esp_ble_gatts_cb_param_t::gatts_add_char_descr_evt_param:: (C++ 成员), 228
esp_ble_gatts_cb_param_t::gatts_add_char_descr_evt_param:: (C++ 成员), 228

esp_ble_gatts_cb_param_t::gatts_add_char_descr_evt_param::service_handle (C++ 成员), 228
esp_ble_gatts_cb_param_t::gatts_add_char_descr_evt_param::status (C++ 成员), 228
esp_ble_gatts_cb_param_t::gatts_add_char_evt_param (C++ 类), 228
esp_ble_gatts_cb_param_t::gatts_add_char_evt_param::attr_handle (C++ 成员), 228
esp_ble_gatts_cb_param_t::gatts_add_char_evt_param::char_uuid (C++ 成员), 228
esp_ble_gatts_cb_param_t::gatts_add_char_evt_param::service_handle (C++ 成员), 228
esp_ble_gatts_cb_param_t::gatts_add_char_evt_param::status (C++ 成员), 228
esp_ble_gatts_cb_param_t::gatts_add_incl_srvc_evt_param (C++ 类), 228
esp_ble_gatts_cb_param_t::gatts_add_incl_srvc_evt_param::attr_handle (C++ 成员), 228
esp_ble_gatts_cb_param_t::gatts_add_incl_srvc_evt_param::service_handle (C++ 成员), 228
esp_ble_gatts_cb_param_t::gatts_add_incl_srvc_evt_param::status (C++ 成员), 228
esp_ble_gatts_cb_param_t::gatts_cancel_open_evt_param (C++ 类), 228
esp_ble_gatts_cb_param_t::gatts_cancel_open_evt_param::status (C++ 成员), 229
esp_ble_gatts_cb_param_t::gatts_close_evt_param (C++ 类), 229
esp_ble_gatts_cb_param_t::gatts_close_evt_param::conn_id (C++ 成员), 229
esp_ble_gatts_cb_param_t::gatts_close_evt_param::status (C++ 成员), 229
esp_ble_gatts_cb_param_t::gatts_conf_evt_param (C++ 类), 229
esp_ble_gatts_cb_param_t::gatts_conf_evt_param::conn_id (C++ 成员), 229
esp_ble_gatts_cb_param_t::gatts_conf_evt_param::handle (C++ 成员), 229
esp_ble_gatts_cb_param_t::gatts_conf_evt_param::value (C++ 成员), 229
esp_ble_gatts_cb_param_t::gatts_congest_evt_param (C++ 类), 229
esp_ble_gatts_cb_param_t::gatts_congest_evt_param::congested (C++ 成员), 229
esp_ble_gatts_cb_param_t::gatts_congest_evt_param::conn_id (C++ 成员), 229
esp_ble_gatts_cb_param_t::gatts_connect_evt_param (C++ 类), 230
esp_ble_gatts_cb_param_t::gatts_connect_evt_param::conn_id (C++ 成员), 230
esp_ble_gatts_cb_param_t::gatts_connect_evt_param::remote_bda (C++ 成员), 230
esp_ble_gatts_cb_param_t::gatts_create_evt_param (C++ 类), 230
esp_ble_gatts_cb_param_t::gatts_create_evt_param::service_handle (C++ 成员), 230
esp_ble_gatts_cb_param_t::gatts_create_evt_param::service_id (C++ 成员), 230
esp_ble_gatts_cb_param_t::gatts_create_evt_param::status (C++ 成员), 230
esp_ble_gatts_cb_param_t::gatts_delete_evt_param (C++ 类), 230
esp_ble_gatts_cb_param_t::gatts_delete_evt_param::service_handle (C++ 成员), 230
esp_ble_gatts_cb_param_t::gatts_delete_evt_param::status (C++ 成员), 230
esp_ble_gatts_cb_param_t::gatts_disconnect_evt_param (C++ 类), 230
esp_ble_gatts_cb_param_t::gatts_disconnect_evt_param::conn_id (C++ 成员), 231
esp_ble_gatts_cb_param_t::gatts_disconnect_evt_param::reason (C++ 成员), 231
esp_ble_gatts_cb_param_t::gatts_disconnect_evt_param::remote_bda (C++ 成员), 231
esp_ble_gatts_cb_param_t::gatts_exec_write_evt_param (C++ 类), 231
esp_ble_gatts_cb_param_t::gatts_exec_write_evt_param::bda (C++ 成员), 231
esp_ble_gatts_cb_param_t::gatts_exec_write_evt_param::conn_id (C++ 成员), 231

esp_ble_gatts_cb_param_t::gatts_exec_write_evt_param::conn_id (C++ 成员), 231
esp_ble_gatts_cb_param_t::gatts_exec_write_evt_param::exec_write_flag (C++ 成员), 231
esp_ble_gatts_cb_param_t::gatts_mtu_evt_param (C++ 类), 231
esp_ble_gatts_cb_param_t::gatts_mtu_evt_param::conn_id (C++ 成员), 231
esp_ble_gatts_cb_param_t::gatts_mtu_evt_param::mtu (C++ 成员), 231
esp_ble_gatts_cb_param_t::gatts_open_evt_param (C++ 类), 231
esp_ble_gatts_cb_param_t::gatts_open_evt_param::status (C++ 成员), 231
esp_ble_gatts_cb_param_t::gatts_read_evt_param (C++ 类), 231
esp_ble_gatts_cb_param_t::gatts_read_evt_param::bda (C++ 成员), 232
esp_ble_gatts_cb_param_t::gatts_read_evt_param::conn_id (C++ 成员), 232
esp_ble_gatts_cb_param_t::gatts_read_evt_param::handle (C++ 成员), 232
esp_ble_gatts_cb_param_t::gatts_read_evt_param::is_long (C++ 成员), 232
esp_ble_gatts_cb_param_t::gatts_read_evt_param::need_rsp (C++ 成员), 232
esp_ble_gatts_cb_param_t::gatts_read_evt_param::offset (C++ 成员), 232
esp_ble_gatts_cb_param_t::gatts_read_evt_param::trans_id (C++ 成员), 232
esp_ble_gatts_cb_param_t::gatts_reg_evt_param (C++ 类), 232
esp_ble_gatts_cb_param_t::gatts_reg_evt_param::app_id (C++ 成员), 232
esp_ble_gatts_cb_param_t::gatts_reg_evt_param::status (C++ 成员), 232
esp_ble_gatts_cb_param_t::gatts_rsp_evt_param (C++ 类), 232
esp_ble_gatts_cb_param_t::gatts_rsp_evt_param::handle (C++ 成员), 232
esp_ble_gatts_cb_param_t::gatts_rsp_evt_param::status (C++ 成员), 232
esp_ble_gatts_cb_param_t::gatts_send_service_change_evt_param (C++ 类), 232
esp_ble_gatts_cb_param_t::gatts_send_service_change_evt_param::status (C++ 成员), 233
esp_ble_gatts_cb_param_t::gatts_set_attr_val_evt_param (C++ 类), 233
esp_ble_gatts_cb_param_t::gatts_set_attr_val_evt_param::attr_id (C++ 成员), 233
esp_ble_gatts_cb_param_t::gatts_set_attr_val_evt_param::srvc_id (C++ 成员), 233
esp_ble_gatts_cb_param_t::gatts_set_attr_val_evt_param::status (C++ 成员), 233
esp_ble_gatts_cb_param_t::gatts_start_evt_param (C++ 类), 233
esp_ble_gatts_cb_param_t::gatts_start_evt_param::service_handle (C++ 成员), 233
esp_ble_gatts_cb_param_t::gatts_start_evt_param::status (C++ 成员), 233
esp_ble_gatts_cb_param_t::gatts_stop_evt_param (C++ 类), 233
esp_ble_gatts_cb_param_t::gatts_stop_evt_param::service_handle (C++ 成员), 233
esp_ble_gatts_cb_param_t::gatts_stop_evt_param::status (C++ 成员), 233
esp_ble_gatts_cb_param_t::gatts_write_evt_param (C++ 类), 233
esp_ble_gatts_cb_param_t::gatts_write_evt_param::bda (C++ 成员), 234
esp_ble_gatts_cb_param_t::gatts_write_evt_param::conn_id (C++ 成员), 234
esp_ble_gatts_cb_param_t::gatts_write_evt_param::handle (C++ 成员), 234
esp_ble_gatts_cb_param_t::gatts_write_evt_param::is_prep (C++ 成员), 234
esp_ble_gatts_cb_param_t::gatts_write_evt_param::len (C++ 成员), 234
esp_ble_gatts_cb_param_t::gatts_write_evt_param::need_rsp (C++ 成员), 234
esp_ble_gatts_cb_param_t::gatts_write_evt_param::offset (C++ 成员), 234
esp_ble_gatts_cb_param_t::gatts_write_evt_param::trans_id (C++ 成员), 234

esp_ble_gatts_cb_param_t::gatts_write_evt_param::value (C++ 成员), 234
esp_ble_gatts_cb_param_t::mtu (C++ 成员), 226
esp_ble_gatts_cb_param_t::open (C++ 成员), 227
esp_ble_gatts_cb_param_t::read (C++ 成员), 226
esp_ble_gatts_cb_param_t::reg (C++ 成员), 226
esp_ble_gatts_cb_param_t::rsp (C++ 成员), 227
esp_ble_gatts_cb_param_t::service_change (C++ 成员), 227
esp_ble_gatts_cb_param_t::set_attr_val (C++ 成员), 227
esp_ble_gatts_cb_param_t::start (C++ 成员), 226
esp_ble_gatts_cb_param_t::stop (C++ 成员), 226
esp_ble_gatts_cb_param_t::write (C++ 成员), 226
esp_ble_gatts_close (C++ 函数), 225
esp_ble_gatts_create_attr_tab (C++ 函数), 221
esp_ble_gatts_create_service (C++ 函数), 220
esp_ble_gatts_delete_service (C++ 函数), 222
esp_ble_gatts_get_attr_value (C++ 函数), 224
esp_ble_gatts_open (C++ 函数), 225
esp_ble_gatts_register_callback (C++ 函数), 220
esp_ble_gatts_send_indicate (C++ 函数), 223
esp_ble_gatts_send_response (C++ 函数), 224
esp_ble_gatts_send_service_change_indication (C++ 函数), 225
esp_ble_gatts_set_attr_value (C++ 函数), 224
esp_ble_gatts_start_service (C++ 函数), 223
esp_ble_gatts_stop_service (C++ 函数), 223
esp_ble_get_bond_device_list (C++ 函数), 178
esp_ble_get_bond_device_num (C++ 函数), 178
ESP_BLE_HOST_STATUS_CHECK (C 宏), 389
ESP_BLE_HOST_STATUS_ENABLED (C 宏), 389
ESP_BLE_ID_KEY_MASK (C 宏), 165
esp_ble_io_cap_t (C++ 类型), 198
ESP_BLE_IS_VALID_PARAM (C 宏), 164
esp_ble_key_mask_t (C++ 类型), 165
esp_ble_key_t (C++ 类), 193
esp_ble_key_t::bd_addr (C++ 成员), 193
esp_ble_key_t::key_type (C++ 成员), 193
esp_ble_key_t::p_key_value (C++ 成员), 193
esp_ble_key_type_t (C++ 类型), 197
esp_ble_key_value_t (C++ 类型), 180
esp_ble_key_value_t::lcsrk_key (C++ 成员), 180
esp_ble_key_value_t::lenc_key (C++ 成员), 180
esp_ble_key_value_t::pcsrk_key (C++ 成员), 180
esp_ble_key_value_t::penc_key (C++ 成员), 180
esp_ble_key_value_t::pid_key (C++ 成员), 180
esp_ble_lcsrk_keys (C++ 类), 191
esp_ble_lcsrk_keys::counter (C++ 成员), 192
esp_ble_lcsrk_keys::csrk (C++ 成员), 192
esp_ble_lcsrk_keys::div (C++ 成员), 192
esp_ble_lcsrk_keys::sec_level (C++ 成员), 192
esp_ble_lenc_keys_t (C++ 类), 191
esp_ble_lenc_keys_t::div (C++ 成员), 191
esp_ble_lenc_keys_t::key_size (C++ 成员), 191
esp_ble_lenc_keys_t::ltk (C++ 成员), 191
esp_ble_lenc_keys_t::sec_level (C++ 成员), 191
ESP_BLE_LINK_KEY_MASK (C 宏), 165
esp_ble_local_id_keys_t (C++ 类), 193
esp_ble_local_id_keys_t::dhk (C++ 成员), 193
esp_ble_local_id_keys_t::ir (C++ 成员), 193
esp_ble_local_id_keys_t::irk (C++ 成员), 193
ESP_BLE_MESH_ACTUATOR_BLOCKED_ERROR (C 宏), 529
ESP_BLE_MESH_ACTUATOR_BLOCKED_WARNING (C 宏), 529
ESP_BLE_MESH_ADDR_ALL_NODES (C 宏), 389
ESP_BLE_MESH_ADDR_FRIENDS (C 宏), 389
ESP_BLE_MESH_ADDR_IS_GROUP (C 宏), 390
ESP_BLE_MESH_ADDR_IS_RFU (C 宏), 390
ESP_BLE_MESH_ADDR_IS_UNICAST (C 宏), 390
ESP_BLE_MESH_ADDR_IS_VIRTUAL (C 宏), 390
ESP_BLE_MESH_ADDR_PROXIES (C 宏), 389
ESP_BLE_MESH_ADDR_RELAYS (C 宏), 389
ESP_BLE_MESH_ADDR_TYPE_PUBLIC (C 宏), 393

ESP_BLE_MESH_ADDR_TYPE_RANDOM (C 宏), 393
ESP_BLE_MESH_ADDR_TYPE_RPA_PUBLIC (C 宏), 393
ESP_BLE_MESH_ADDR_TYPE_RPA_RANDOM (C 宏), 393
esp_ble_mesh_addr_type_t (C++ 类型), 409
ESP_BLE_MESH_ADDR_UNASSIGNED (C 宏), 389
ESP_BLE_MESH_BATTERY_LOW_ERROR (C 宏), 528
ESP_BLE_MESH_BATTERY_LOW_WARNING (C 宏), 528
esp_ble_mesh_bd_addr_t (C++ 类型), 409
ESP_BLE_MESH_BEACON_DISABLED (C 宏), 390
ESP_BLE_MESH_BEACON_ENABLED (C 宏), 390
ESP_BLE_MESH_BEEP (C++ 枚举子), 411
esp_ble_mesh_ble_adv_data_t (C++ 类), 385
esp_ble_mesh_ble_adv_data_t::adv_data (C++ 成员), 385
esp_ble_mesh_ble_adv_data_t::adv_data_len (C++ 成员), 385
esp_ble_mesh_ble_adv_data_t::scan_rsp_data (C++ 成员), 385
esp_ble_mesh_ble_adv_data_t::scan_rsp_data_len (C++ 成员), 385
ESP_BLE_MESH_BLE_ADV_INFINITE (C 宏), 394
esp_ble_mesh_ble_adv_param_t (C++ 类), 384
esp_ble_mesh_ble_adv_param_t::adv_type (C++ 成员), 384
esp_ble_mesh_ble_adv_param_t::count (C++ 成员), 385
esp_ble_mesh_ble_adv_param_t::duration (C++ 成员), 384
esp_ble_mesh_ble_adv_param_t::interval (C++ 成员), 384
esp_ble_mesh_ble_adv_param_t::own_addr_type (C++ 成员), 384
esp_ble_mesh_ble_adv_param_t::peer_addr (C++ 成员), 384
esp_ble_mesh_ble_adv_param_t::peer_addr_type (C++ 成员), 384
esp_ble_mesh_ble_adv_param_t::period (C++ 成员), 385
esp_ble_mesh_ble_adv_param_t::priority (C++ 成员), 385
ESP_BLE_MESH_BLE_ADV_PRIO_HIGH (C++ 枚举子), 412
ESP_BLE_MESH_BLE_ADV_PRIO_LOW (C++ 枚举子), 412
esp_ble_mesh_ble_adv_priority_t (C++ 类型), 412
ESP_BLE_MESH_BLINK (C++ 枚举子), 411
esp_ble_mesh_cb_t (C++ 类型), 408
esp_ble_mesh_cb_type_t (C++ 类型), 410
esp_ble_mesh_cfg_app_key_add_t (C++ 类), 457
esp_ble_mesh_cfg_app_key_add_t::app_idx (C++ 成员), 458
esp_ble_mesh_cfg_app_key_add_t::app_key (C++ 成员), 458
esp_ble_mesh_cfg_app_key_add_t::net_idx (C++ 成员), 458
esp_ble_mesh_cfg_app_key_delete_t (C++ 类), 463
esp_ble_mesh_cfg_app_key_delete_t::app_idx (C++ 成员), 463
esp_ble_mesh_cfg_app_key_delete_t::net_idx (C++ 成员), 463
esp_ble_mesh_cfg_app_key_get_t (C++ 类), 455
esp_ble_mesh_cfg_app_key_get_t::net_idx (C++ 成员), 455
esp_ble_mesh_cfg_app_key_list_cb_t (C++ 类), 470
esp_ble_mesh_cfg_app_key_list_cb_t::app_idx (C++ 成员), 470
esp_ble_mesh_cfg_app_key_list_cb_t::net_idx (C++ 成员), 470
esp_ble_mesh_cfg_app_key_list_cb_t::status (C++ 成员), 470
esp_ble_mesh_cfg_app_key_status_cb_t (C++ 类), 467
esp_ble_mesh_cfg_app_key_status_cb_t::app_idx (C++ 成员), 467
esp_ble_mesh_cfg_app_key_status_cb_t::net_idx (C++ 成员), 467
esp_ble_mesh_cfg_app_key_status_cb_t::status (C++ 成员), 467
esp_ble_mesh_cfg_app_key_update_t (C++ 类), 462
esp_ble_mesh_cfg_app_key_update_t::app_idx

(C++ 成员), 462
esp_ble_mesh_cfg_app_key_update_t::app_key (C++ 成员), 462
esp_ble_mesh_cfg_app_key_update_t::net_idx (C++ 成员), 462
esp_ble_mesh_cfg_beacon_set_t (C++ 类), 456
esp_ble_mesh_cfg_beacon_set_t::beacon (C++ 成员), 456
esp_ble_mesh_cfg_beacon_status_cb_t (C++ 类), 465
esp_ble_mesh_cfg_beacon_status_cb_t::beacon (C++ 成员), 465
esp_ble_mesh_cfg_client_cb_event_t (C++ 类型), 477
esp_ble_mesh_cfg_client_cb_param_t (C++ 类), 471
esp_ble_mesh_cfg_client_cb_param_t::error_code (C++ 成员), 472
esp_ble_mesh_cfg_client_cb_param_t::params (C++ 成员), 472
esp_ble_mesh_cfg_client_cb_param_t::status_cb (C++ 成员), 472
esp_ble_mesh_cfg_client_cb_t (C++ 类型), 477
esp_ble_mesh_cfg_client_common_cb_param_t (C++ 类型), 450
esp_ble_mesh_cfg_client_common_cb_param_t::app_key_list (C++ 成员), 451
esp_ble_mesh_cfg_client_common_cb_param_t::app_key_status (C++ 成员), 451
esp_ble_mesh_cfg_client_common_cb_param_t::beacon_status (C++ 成员), 450
esp_ble_mesh_cfg_client_common_cb_param_t::comp_data_status (C++ 成员), 450
esp_ble_mesh_cfg_client_common_cb_param_t::default_ttl_status (C++ 成员), 450
esp_ble_mesh_cfg_client_common_cb_param_t::friend_status (C++ 成员), 451
esp_ble_mesh_cfg_client_common_cb_param_t::gatt_proxy_status (C++ 成员), 450
esp_ble_mesh_cfg_client_common_cb_param_t::heartbeat_pub_status (C++ 成员), 451
esp_ble_mesh_cfg_client_common_cb_param_t::heartbeat_sub_status (C++ 成员), 451
esp_ble_mesh_cfg_client_common_cb_param_t::kr_phase_status (C++ 成员), 451
esp_ble_mesh_cfg_client_common_cb_param_t::lpn_timeout_status (C++ 成员), 451
esp_ble_mesh_cfg_client_common_cb_param_t::model_app_list (C++ 成员), 451
esp_ble_mesh_cfg_client_common_cb_param_t::model_app_status (C++ 成员), 451
esp_ble_mesh_cfg_client_common_cb_param_t::model_pub_status (C++ 成员), 451
esp_ble_mesh_cfg_client_common_cb_param_t::model_sub_list (C++ 成员), 451
esp_ble_mesh_cfg_client_common_cb_param_t::model_sub_status (C++ 成员), 451
esp_ble_mesh_cfg_client_common_cb_param_t::net_transmit_status (C++ 成员), 451
esp_ble_mesh_cfg_client_common_cb_param_t::netkey_list (C++ 成员), 451
esp_ble_mesh_cfg_client_common_cb_param_t::netkey_status (C++ 成员), 451
esp_ble_mesh_cfg_client_common_cb_param_t::node_identity_status (C++ 成员), 451
esp_ble_mesh_cfg_client_common_cb_param_t::relay_status (C++ 成员), 451
ESP_BLE_MESH_CFG_CLIENT_EVT_MAX (C++ 枚举子), 477
ESP_BLE_MESH_CFG_CLIENT_GET_STATE_EVT (C++ 枚举子), 477
esp_ble_mesh_cfg_client_get_state_t (C++ 类型), 447
esp_ble_mesh_cfg_client_get_state_t::app_key_get (C++ 成员), 448
esp_ble_mesh_cfg_client_get_state_t::comp_data_get (C++ 成员), 448
esp_ble_mesh_cfg_client_get_state_t::kr_phase_get (C++ 成员), 448
esp_ble_mesh_cfg_client_get_state_t::lpn_pollto_get (C++ 成员), 448
esp_ble_mesh_cfg_client_get_state_t::model_pub_get (C++ 成员), 448
esp_ble_mesh_cfg_client_get_state_t::node_identity_get

(C++ 成员), 448
esp_ble_mesh_cfg_client_get_state_t::sig_model_sub_get (C++ 成员), 448
esp_ble_mesh_cfg_client_get_state_t::sig_model_sub_list (C++ 成员), 448
esp_ble_mesh_cfg_client_get_state_t::vnd_model_sub_get (C++ 成员), 448
esp_ble_mesh_cfg_client_get_state_t::vnd_model_sub_list (C++ 成员), 448
ESP_BLE_MESH_CFG_CLIENT_PUBLISH_EVT (C++ 枚举子), 477
ESP_BLE_MESH_CFG_CLIENT_SET_STATE_EVT (C++ 枚举子), 477
esp_ble_mesh_cfg_client_set_state_t (C++ 类型), 448
esp_ble_mesh_cfg_client_set_state_t::app_key_add (C++ 成员), 449
esp_ble_mesh_cfg_client_set_state_t::app_key_delete (C++ 成员), 450
esp_ble_mesh_cfg_client_set_state_t::app_key_update (C++ 成员), 450
esp_ble_mesh_cfg_client_set_state_t::beacon_set (C++ 成员), 449
esp_ble_mesh_cfg_client_set_state_t::default_ttl_set (C++ 成员), 449
esp_ble_mesh_cfg_client_set_state_t::friend_set (C++ 成员), 449
esp_ble_mesh_cfg_client_set_state_t::gatt_proxy_set (C++ 成员), 449
esp_ble_mesh_cfg_client_set_state_t::heartbeat_pub_set (C++ 成员), 449
esp_ble_mesh_cfg_client_set_state_t::heartbeat_sub_set (C++ 成员), 450
esp_ble_mesh_cfg_client_set_state_t::kr_phase_set (C++ 成员), 450
esp_ble_mesh_cfg_client_set_state_t::model_app_bind (C++ 成员), 449
esp_ble_mesh_cfg_client_set_state_t::model_app_unbind (C++ 成员), 450
esp_ble_mesh_cfg_client_set_state_t::model_pub_set (C++ 成员), 449
esp_ble_mesh_cfg_client_set_state_t::model_pub_va_set (C++ 成员), 450
esp_ble_mesh_cfg_client_set_state_t::model_sub_add (C++ 成员), 449
esp_ble_mesh_cfg_client_set_state_t::model_sub_delete (C++ 成员), 449
esp_ble_mesh_cfg_client_set_state_t::model_sub_delete_all (C++ 成员), 450
esp_ble_mesh_cfg_client_set_state_t::model_sub_overwrite (C++ 成员), 449
esp_ble_mesh_cfg_client_set_state_t::model_sub_va_add (C++ 成员), 449
esp_ble_mesh_cfg_client_set_state_t::model_sub_va_delete (C++ 成员), 449
esp_ble_mesh_cfg_client_set_state_t::model_sub_va_overwrite (C++ 成员), 449
esp_ble_mesh_cfg_client_set_state_t::net_key_add (C++ 成员), 449
esp_ble_mesh_cfg_client_set_state_t::net_key_delete (C++ 成员), 450
esp_ble_mesh_cfg_client_set_state_t::net_key_update (C++ 成员), 450
esp_ble_mesh_cfg_client_set_state_t::net_transmit_set (C++ 成员), 450
esp_ble_mesh_cfg_client_set_state_t::node_identity_set (C++ 成员), 450
esp_ble_mesh_cfg_client_set_state_t::relay_set (C++ 成员), 449
ESP_BLE_MESH_CFG_CLIENT_TIMEOUT_EVT (C++ 枚举子), 477
esp_ble_mesh_cfg_comp_data_status_cb_t (C++ 类), 465
esp_ble_mesh_cfg_comp_data_status_cb_t::composition_data (C++ 成员), 465
esp_ble_mesh_cfg_comp_data_status_cb_t::page (C++ 成员), 465
esp_ble_mesh_cfg_composition_data_get_t (C++ 类), 454
esp_ble_mesh_cfg_composition_data_get_t::page (C++ 成员), 454
esp_ble_mesh_cfg_default_ttl_set_t (C++ 类), 456
esp_ble_mesh_cfg_default_ttl_set_t::ttl

(C++ 成员), 457
esp_ble_mesh_cfg_default_ttl_status_cb_t (C++ 类), 465
esp_ble_mesh_cfg_default_ttl_status_cb_t::default_ttl (C++ 成员), 465
esp_ble_mesh_cfg_friend_set_t (C++ 类), 457
esp_ble_mesh_cfg_friend_set_t::friend_state (C++ 成员), 457
esp_ble_mesh_cfg_friend_status_cb_t (C++ 类), 468
esp_ble_mesh_cfg_friend_status_cb_t::friend_state (C++ 成员), 468
esp_ble_mesh_cfg_gatt_proxy_set_t (C++ 类), 457
esp_ble_mesh_cfg_gatt_proxy_set_t::gatt_proxy (C++ 成员), 457
esp_ble_mesh_cfg_gatt_proxy_status_cb_t (C++ 类), 465
esp_ble_mesh_cfg_gatt_proxy_status_cb_t::gatt_proxy (C++ 成员), 465
esp_ble_mesh_cfg_hb_pub_status_cb_t (C++ 类), 468
esp_ble_mesh_cfg_hb_pub_status_cb_t::count (C++ 成员), 468
esp_ble_mesh_cfg_hb_pub_status_cb_t::dst (C++ 成员), 468
esp_ble_mesh_cfg_hb_pub_status_cb_t::features (C++ 成员), 468
esp_ble_mesh_cfg_hb_pub_status_cb_t::net_idx (C++ 成员), 468
esp_ble_mesh_cfg_hb_pub_status_cb_t::period (C++ 成员), 468
esp_ble_mesh_cfg_hb_pub_status_cb_t::status (C++ 成员), 468
esp_ble_mesh_cfg_hb_pub_status_cb_t::ttl (C++ 成员), 468
esp_ble_mesh_cfg_hb_sub_status_cb_t (C++ 类), 469
esp_ble_mesh_cfg_hb_sub_status_cb_t::count (C++ 成员), 469
esp_ble_mesh_cfg_hb_sub_status_cb_t::dst (C++ 成员), 469
esp_ble_mesh_cfg_hb_sub_status_cb_t::max_hops (C++ 成员), 469
esp_ble_mesh_cfg_hb_sub_status_cb_t::min_hops (C++ 成员), 469
esp_ble_mesh_cfg_hb_sub_status_cb_t::period (C++ 成员), 469
esp_ble_mesh_cfg_hb_sub_status_cb_t::src (C++ 成员), 469
esp_ble_mesh_cfg_hb_sub_status_cb_t::status (C++ 成员), 469
esp_ble_mesh_cfg_heartbeat_pub_set_t (C++ 类), 464
esp_ble_mesh_cfg_heartbeat_pub_set_t::count (C++ 成员), 464
esp_ble_mesh_cfg_heartbeat_pub_set_t::dst (C++ 成员), 464
esp_ble_mesh_cfg_heartbeat_pub_set_t::feature (C++ 成员), 464
esp_ble_mesh_cfg_heartbeat_pub_set_t::net_idx (C++ 成员), 464
esp_ble_mesh_cfg_heartbeat_pub_set_t::period (C++ 成员), 464
esp_ble_mesh_cfg_heartbeat_pub_set_t::ttl (C++ 成员), 464
esp_ble_mesh_cfg_heartbeat_sub_set_t (C++ 类), 464
esp_ble_mesh_cfg_heartbeat_sub_set_t::dst (C++ 成员), 464
esp_ble_mesh_cfg_heartbeat_sub_set_t::period (C++ 成员), 465
esp_ble_mesh_cfg_heartbeat_sub_set_t::src (C++ 成员), 464
esp_ble_mesh_cfg_kr_phase_get_t (C++ 类), 456
esp_ble_mesh_cfg_kr_phase_get_t::net_idx (C++ 成员), 456
esp_ble_mesh_cfg_kr_phase_set_t (C++ 类), 463
esp_ble_mesh_cfg_kr_phase_set_t::net_idx (C++ 成员), 464
esp_ble_mesh_cfg_kr_phase_set_t::transition (C++ 成员), 464
esp_ble_mesh_cfg_kr_phase_status_cb_t (C++ 类), 471

esp_ble_mesh_cfg_kr_phase_status_cb_t::net_idx (C++ 成员), 471
esp_ble_mesh_cfg_kr_phase_status_cb_t::phase (C++ 成员), 471
esp_ble_mesh_cfg_kr_phase_status_cb_t::status (C++ 成员), 471
esp_ble_mesh_cfg_lpn_polltimeout_get_t (C++ 类), 456
esp_ble_mesh_cfg_lpn_polltimeout_get_t::lpn_addr (C++ 成员), 456
esp_ble_mesh_cfg_lpn_pollto_status_cb_t (C++ 类), 471
esp_ble_mesh_cfg_lpn_pollto_status_cb_t::lpn_addr (C++ 成员), 471
esp_ble_mesh_cfg_lpn_pollto_status_cb_t::poll_timeout (C++ 成员), 471
esp_ble_mesh_cfg_mod_app_status_cb_t (C++ 类), 467
esp_ble_mesh_cfg_mod_app_status_cb_t::app_idx (C++ 成员), 468
esp_ble_mesh_cfg_mod_app_status_cb_t::company_id (C++ 成员), 468
esp_ble_mesh_cfg_mod_app_status_cb_t::element_addr (C++ 成员), 468
esp_ble_mesh_cfg_mod_app_status_cb_t::model_id (C++ 成员), 468
esp_ble_mesh_cfg_mod_app_status_cb_t::status (C++ 成员), 468
esp_ble_mesh_cfg_model_app_bind_t (C++ 类), 458
esp_ble_mesh_cfg_model_app_bind_t::company_id (C++ 成员), 458
esp_ble_mesh_cfg_model_app_bind_t::element_addr (C++ 成员), 458
esp_ble_mesh_cfg_model_app_bind_t::model_app_idx (C++ 成员), 458
esp_ble_mesh_cfg_model_app_bind_t::model_id (C++ 成员), 458
esp_ble_mesh_cfg_model_app_list_cb_t (C++ 类), 470
esp_ble_mesh_cfg_model_app_list_cb_t::app_idx (C++ 成员), 471
esp_ble_mesh_cfg_model_app_list_cb_t::company_id (C++ 成员), 471
esp_ble_mesh_cfg_model_app_list_cb_t::element_addr (C++ 成员), 471
esp_ble_mesh_cfg_model_app_list_cb_t::model_id (C++ 成员), 471
esp_ble_mesh_cfg_model_app_list_cb_t::status (C++ 成员), 471
esp_ble_mesh_cfg_model_app_unbind_t (C++ 类), 463
esp_ble_mesh_cfg_model_app_unbind_t::company_id (C++ 成员), 463
esp_ble_mesh_cfg_model_app_unbind_t::element_addr (C++ 成员), 463
esp_ble_mesh_cfg_model_app_unbind_t::model_app_idx (C++ 成员), 463
esp_ble_mesh_cfg_model_app_unbind_t::model_id (C++ 成员), 463
esp_ble_mesh_cfg_model_pub_get_t (C++ 类), 454
esp_ble_mesh_cfg_model_pub_get_t::company_id (C++ 成员), 454
esp_ble_mesh_cfg_model_pub_get_t::element_addr (C++ 成员), 454
esp_ble_mesh_cfg_model_pub_get_t::model_id (C++ 成员), 454
esp_ble_mesh_cfg_model_pub_set_t (C++ 类), 458
esp_ble_mesh_cfg_model_pub_set_t::company_id (C++ 成员), 459
esp_ble_mesh_cfg_model_pub_set_t::cred_flag (C++ 成员), 458
esp_ble_mesh_cfg_model_pub_set_t::element_addr (C++ 成员), 458
esp_ble_mesh_cfg_model_pub_set_t::model_id (C++ 成员), 459
esp_ble_mesh_cfg_model_pub_set_t::publish_addr (C++ 成员), 458
esp_ble_mesh_cfg_model_pub_set_t::publish_app_idx (C++ 成员), 458
esp_ble_mesh_cfg_model_pub_set_t::publish_period (C++ 成员), 459

esp_ble_mesh_cfg_model_pub_set_t::publish_retransmit (C++ 成员), 459
esp_ble_mesh_cfg_model_pub_set_t::publish_ttl (C++ 成员), 458
esp_ble_mesh_cfg_model_pub_status_cb_t (C++ 类), 466
esp_ble_mesh_cfg_model_pub_status_cb_t::app_idx (C++ 成员), 466
esp_ble_mesh_cfg_model_pub_status_cb_t::company_id (C++ 成员), 466
esp_ble_mesh_cfg_model_pub_status_cb_t::cred_flag (C++ 成员), 466
esp_ble_mesh_cfg_model_pub_status_cb_t::element_addr (C++ 成员), 466
esp_ble_mesh_cfg_model_pub_status_cb_t::model_id (C++ 成员), 466
esp_ble_mesh_cfg_model_pub_status_cb_t::period (C++ 成员), 466
esp_ble_mesh_cfg_model_pub_status_cb_t::publish_addr (C++ 成员), 466
esp_ble_mesh_cfg_model_pub_status_cb_t::status (C++ 成员), 466
esp_ble_mesh_cfg_model_pub_status_cb_t::transmit (C++ 成员), 466
esp_ble_mesh_cfg_model_pub_status_cb_t::ttl (C++ 成员), 466
esp_ble_mesh_cfg_model_pub_va_set_t (C++ 类), 461
esp_ble_mesh_cfg_model_pub_va_set_t::company_id (C++ 成员), 461
esp_ble_mesh_cfg_model_pub_va_set_t::cred_flag (C++ 成员), 461
esp_ble_mesh_cfg_model_pub_va_set_t::element_addr (C++ 成员), 461
esp_ble_mesh_cfg_model_pub_va_set_t::label_uuid (C++ 成员), 461
esp_ble_mesh_cfg_model_pub_va_set_t::model_id (C++ 成员), 461
esp_ble_mesh_cfg_model_pub_va_set_t::publish_addr (C++ 成员), 461
esp_ble_mesh_cfg_model_pub_va_set_t::publish_period (C++ 成员), 461
esp_ble_mesh_cfg_model_pub_va_set_t::publish_retransmit (C++ 成员), 461
esp_ble_mesh_cfg_model_pub_va_set_t::publish_ttl (C++ 成员), 461
esp_ble_mesh_cfg_model_sub_add_t (C++ 类), 459
esp_ble_mesh_cfg_model_sub_add_t::company_id (C++ 成员), 459
esp_ble_mesh_cfg_model_sub_add_t::element_addr (C++ 成员), 459
esp_ble_mesh_cfg_model_sub_add_t::model_id (C++ 成员), 459
esp_ble_mesh_cfg_model_sub_add_t::sub_addr (C++ 成员), 459
esp_ble_mesh_cfg_model_sub_delete_all_t (C++ 类), 462
esp_ble_mesh_cfg_model_sub_delete_all_t::company_id (C++ 成员), 462
esp_ble_mesh_cfg_model_sub_delete_all_t::element_addr (C++ 成员), 462
esp_ble_mesh_cfg_model_sub_delete_all_t::model_id (C++ 成员), 462
esp_ble_mesh_cfg_model_sub_delete_t (C++ 类), 459
esp_ble_mesh_cfg_model_sub_delete_t::company_id (C++ 成员), 459
esp_ble_mesh_cfg_model_sub_delete_t::element_addr (C++ 成员), 459
esp_ble_mesh_cfg_model_sub_delete_t::model_id (C++ 成员), 459
esp_ble_mesh_cfg_model_sub_delete_t::sub_addr (C++ 成员), 459
esp_ble_mesh_cfg_model_sub_list_cb_t (C++ 类), 469
esp_ble_mesh_cfg_model_sub_list_cb_t::company_id (C++ 成员), 470
esp_ble_mesh_cfg_model_sub_list_cb_t::element_addr (C++ 成员), 469
esp_ble_mesh_cfg_model_sub_list_cb_t::model_id (C++ 成员), 470
esp_ble_mesh_cfg_model_sub_list_cb_t::status (C++ 成员), 469

esp_ble_mesh_cfg_model_sub_list_cb_t::sub_addr (C++ 成员), 470
esp_ble_mesh_cfg_model_sub_overwrite_t (C++ 类), 459
esp_ble_mesh_cfg_model_sub_overwrite_t::company_id (C++ 成员), 460
esp_ble_mesh_cfg_model_sub_overwrite_t::element_addr (C++ 成员), 460
esp_ble_mesh_cfg_model_sub_overwrite_t::model_id (C++ 成员), 460
esp_ble_mesh_cfg_model_sub_overwrite_t::sub_addr (C++ 成员), 460
esp_ble_mesh_cfg_model_sub_status_cb_t (C++ 类), 466
esp_ble_mesh_cfg_model_sub_status_cb_t::company_id (C++ 成员), 467
esp_ble_mesh_cfg_model_sub_status_cb_t::element_addr (C++ 成员), 467
esp_ble_mesh_cfg_model_sub_status_cb_t::model_id (C++ 成员), 467
esp_ble_mesh_cfg_model_sub_status_cb_t::status (C++ 成员), 467
esp_ble_mesh_cfg_model_sub_status_cb_t::sub_addr (C++ 成员), 467
esp_ble_mesh_cfg_model_sub_va_add_t (C++ 类), 460
esp_ble_mesh_cfg_model_sub_va_add_t::company_id (C++ 成员), 460
esp_ble_mesh_cfg_model_sub_va_add_t::element_addr (C++ 成员), 460
esp_ble_mesh_cfg_model_sub_va_add_t::label_uuid (C++ 成员), 460
esp_ble_mesh_cfg_model_sub_va_add_t::model_id (C++ 成员), 460
esp_ble_mesh_cfg_model_sub_va_delete_t (C++ 类), 460
esp_ble_mesh_cfg_model_sub_va_delete_t::company_id (C++ 成员), 460
esp_ble_mesh_cfg_model_sub_va_delete_t::element_addr (C++ 成员), 460
esp_ble_mesh_cfg_model_sub_va_delete_t::label_uuid (C++ 成员), 460
esp_ble_mesh_cfg_model_sub_va_delete_t::model_id (C++ 成员), 460
esp_ble_mesh_cfg_model_sub_va_overwrite_t (C++ 类), 461
esp_ble_mesh_cfg_model_sub_va_overwrite_t::company_id (C++ 成员), 461
esp_ble_mesh_cfg_model_sub_va_overwrite_t::element_addr (C++ 成员), 461
esp_ble_mesh_cfg_model_sub_va_overwrite_t::label_uuid (C++ 成员), 461
esp_ble_mesh_cfg_model_sub_va_overwrite_t::model_id (C++ 成员), 461
esp_ble_mesh_cfg_net_key_add_t (C++ 类), 457
esp_ble_mesh_cfg_net_key_add_t::net_idx (C++ 成员), 457
esp_ble_mesh_cfg_net_key_add_t::net_key (C++ 成员), 457
esp_ble_mesh_cfg_net_key_delete_t (C++ 类), 462
esp_ble_mesh_cfg_net_key_delete_t::net_idx (C++ 成员), 462
esp_ble_mesh_cfg_net_key_list_cb_t (C++ 类), 470
esp_ble_mesh_cfg_net_key_list_cb_t::net_idx (C++ 成员), 470
esp_ble_mesh_cfg_net_key_status_cb_t (C++ 类), 467
esp_ble_mesh_cfg_net_key_status_cb_t::net_idx (C++ 成员), 467
esp_ble_mesh_cfg_net_key_status_cb_t::status (C++ 成员), 467
esp_ble_mesh_cfg_net_key_update_t (C++ 类), 462
esp_ble_mesh_cfg_net_key_update_t::net_idx (C++ 成员), 462
esp_ble_mesh_cfg_net_key_update_t::net_key (C++ 成员), 462
esp_ble_mesh_cfg_net_trans_status_cb_t (C++ 类), 469
esp_ble_mesh_cfg_net_trans_status_cb_t::net_trans_count (C++ 成员), 469
esp_ble_mesh_cfg_net_trans_status_cb_t::net_trans_step

(C++ 成员), 469
esp_ble_mesh_cfg_net_transmit_set_t (C++ 类), 464
esp_ble_mesh_cfg_net_transmit_set_t::net_transmit (C++ 成员), 464
esp_ble_mesh_cfg_node_id_status_cb_t (C++ 类), 470
esp_ble_mesh_cfg_node_id_status_cb_t::identity (C++ 成员), 470
esp_ble_mesh_cfg_node_id_status_cb_t::net_idx (C++ 成员), 470
esp_ble_mesh_cfg_node_id_status_cb_t::status (C++ 成员), 470
esp_ble_mesh_cfg_node_identity_get_t (C++ 类), 455
esp_ble_mesh_cfg_node_identity_get_t::net_idx (C++ 成员), 455
esp_ble_mesh_cfg_node_identity_set_t (C++ 类), 463
esp_ble_mesh_cfg_node_identity_set_t::identity (C++ 成员), 463
esp_ble_mesh_cfg_node_identity_set_t::net_idx (C++ 成员), 463
esp_ble_mesh_cfg_relay_set_t (C++ 类), 457
esp_ble_mesh_cfg_relay_set_t::relay (C++ 成员), 457
esp_ble_mesh_cfg_relay_set_t::relay_retransmit (C++ 成员), 457
esp_ble_mesh_cfg_relay_status_cb_t (C++ 类), 465
esp_ble_mesh_cfg_relay_status_cb_t::relay (C++ 成员), 466
esp_ble_mesh_cfg_relay_status_cb_t::retransmit (C++ 成员), 466
esp_ble_mesh_cfg_server_cb_event_t (C++ 类型), 477
esp_ble_mesh_cfg_server_cb_param_t (C++ 类), 476
esp_ble_mesh_cfg_server_cb_param_t::ctx (C++ 成员), 476
esp_ble_mesh_cfg_server_cb_param_t::model (C++ 成员), 476
esp_ble_mesh_cfg_server_cb_param_t::value (C++ 成员), 476
esp_ble_mesh_cfg_server_cb_t (C++ 类型), 477
esp_ble_mesh_cfg_server_cb_value_t (C++ 类型), 452
esp_ble_mesh_cfg_server_cb_value_t::state_change (C++ 成员), 453
ESP_BLE_MESH_CFG_SERVER_EVT_MAX (C++ 枚举子), 477
ESP_BLE_MESH_CFG_SERVER_STATE_CHANGE_EVT (C++ 枚举子), 477
esp_ble_mesh_cfg_server_state_change_t (C++ 类型), 452
esp_ble_mesh_cfg_server_state_change_t::appkey_add (C++ 成员), 452
esp_ble_mesh_cfg_server_state_change_t::appkey_delete (C++ 成员), 452
esp_ble_mesh_cfg_server_state_change_t::appkey_update (C++ 成员), 452
esp_ble_mesh_cfg_server_state_change_t::kr_phase_set (C++ 成员), 452
esp_ble_mesh_cfg_server_state_change_t::mod_app_bind (C++ 成员), 452
esp_ble_mesh_cfg_server_state_change_t::mod_app_unbind (C++ 成员), 452
esp_ble_mesh_cfg_server_state_change_t::mod_pub_set (C++ 成员), 452
esp_ble_mesh_cfg_server_state_change_t::mod_sub_add (C++ 成员), 452
esp_ble_mesh_cfg_server_state_change_t::mod_sub_delete (C++ 成员), 452
esp_ble_mesh_cfg_server_state_change_t::netkey_add (C++ 成员), 452
esp_ble_mesh_cfg_server_state_change_t::netkey_delete (C++ 成员), 452
esp_ble_mesh_cfg_server_state_change_t::netkey_update (C++ 成员), 452
esp_ble_mesh_cfg_sig_model_app_get_t (C++ 类), 455
esp_ble_mesh_cfg_sig_model_app_get_t::element_addr (C++ 成员), 456
esp_ble_mesh_cfg_sig_model_app_get_t::model_id

(C++ 成员), 456
esp_ble_mesh_cfg_sig_model_sub_get_t (C++ 类), 455
esp_ble_mesh_cfg_sig_model_sub_get_t::element_addr (C++ 成员), 455
esp_ble_mesh_cfg_sig_model_sub_get_t::model_id (C++ 成员), 455
esp_ble_mesh_cfg_srv (C++ 类), 453
esp_ble_mesh_cfg_srv::beacon (C++ 成员), 453
esp_ble_mesh_cfg_srv::count (C++ 成员), 453
esp_ble_mesh_cfg_srv::default_ttl (C++ 成员), 453
esp_ble_mesh_cfg_srv::dst (C++ 成员), 453
esp_ble_mesh_cfg_srv::expiry (C++ 成员), 454
esp_ble_mesh_cfg_srv::feature (C++ 成员), 454
esp_ble_mesh_cfg_srv::friend_state (C++ 成员), 453
esp_ble_mesh_cfg_srv::gatt_proxy (C++ 成员), 453
esp_ble_mesh_cfg_srv::heartbeat_pub (C++ 成员), 454
esp_ble_mesh_cfg_srv::heartbeat_recv_cb (C++ 成员), 454
esp_ble_mesh_cfg_srv::heartbeat_sub (C++ 成员), 454
esp_ble_mesh_cfg_srv::max_hops (C++ 成员), 454
esp_ble_mesh_cfg_srv::min_hops (C++ 成员), 454
esp_ble_mesh_cfg_srv::model (C++ 成员), 453
esp_ble_mesh_cfg_srv::net_idx (C++ 成员), 454
esp_ble_mesh_cfg_srv::net_transmit (C++ 成员), 453
esp_ble_mesh_cfg_srv::period (C++ 成员), 453
esp_ble_mesh_cfg_srv::relay (C++ 成员), 453
esp_ble_mesh_cfg_srv::relay_retransmit (C++ 成员), 453
esp_ble_mesh_cfg_srv::src (C++ 成员), 454
esp_ble_mesh_cfg_srv::timer (C++ 成员), 453
esp_ble_mesh_cfg_srv::ttl (C++ 成员), 453
esp_ble_mesh_cfg_srv_t (C++ 类型), 477
ESP_BLE_MESH_CFG_STATUS_CANNOT_BIND (C 宏), 400
ESP_BLE_MESH_CFG_STATUS_CANNOT_REMOVE (C 宏), 400
ESP_BLE_MESH_CFG_STATUS_CANNOT_SET (C 宏), 400
ESP_BLE_MESH_CFG_STATUS_CANNOT_UPDATE (C 宏), 400
ESP_BLE_MESH_CFG_STATUS_FEATURE_NOT_SUPPORTED (C 宏), 400
ESP_BLE_MESH_CFG_STATUS_INSUFFICIENT_RESOURCES (C 宏), 400
ESP_BLE_MESH_CFG_STATUS_INVALID_ADDRESS (C 宏), 399
ESP_BLE_MESH_CFG_STATUS_INVALID_APPKEY (C 宏), 399
ESP_BLE_MESH_CFG_STATUS_INVALID_BINDING (C 宏), 400
ESP_BLE_MESH_CFG_STATUS_INVALID_MODEL (C 宏), 399
ESP_BLE_MESH_CFG_STATUS_INVALID_NETKEY (C 宏), 400
ESP_BLE_MESH_CFG_STATUS_INVALID_PUBLISH_PARAMETERS (C 宏), 400
ESP_BLE_MESH_CFG_STATUS_KEY_INDEX_ALREADY_STORED (C 宏), 400
ESP_BLE_MESH_CFG_STATUS_NOT_A_SUBSCRIBE_MODEL (C 宏), 400
ESP_BLE_MESH_CFG_STATUS_STORAGE_FAILURE (C 宏), 400
ESP_BLE_MESH_CFG_STATUS_SUCCESS (C 宏), 399
esp_ble_mesh_cfg_status_t (C++ 类型), 409
ESP_BLE_MESH_CFG_STATUS_TEMP_UNABLE_TO_CHANGE_STATE (C 宏), 400
ESP_BLE_MESH_CFG_STATUS_UNSPECIFIED_ERROR (C 宏), 400
esp_ble_mesh_cfg_vnd_model_app_get_t (C++ 类), 456
esp_ble_mesh_cfg_vnd_model_app_get_t::company_id (C++ 成员), 456
esp_ble_mesh_cfg_vnd_model_app_get_t::element_addr (C++ 成员), 456
esp_ble_mesh_cfg_vnd_model_app_get_t::model_id (C++ 成员), 456

esp_ble_mesh_cfg_vnd_model_sub_get_t (C++ 类), 455
esp_ble_mesh_cfg_vnd_model_sub_get_t::company_id (C++ 成员), 455
esp_ble_mesh_cfg_vnd_model_sub_get_t::element_addr (C++ 成员), 455
esp_ble_mesh_cfg_vnd_model_sub_get_t::model_id (C++ 成员), 455
ESP_BLE_MESH_CID_NVAL (C 宏), 389
esp_ble_mesh_client_common_param_t (C++ 类), 386
esp_ble_mesh_client_common_param_t::ctx (C++ 成员), 386
esp_ble_mesh_client_common_param_t::model (C++ 成员), 386
esp_ble_mesh_client_common_param_t::msg_role (C++ 成员), 386
esp_ble_mesh_client_common_param_t::msg_timeout (C++ 成员), 386
esp_ble_mesh_client_common_param_t::opcode (C++ 成员), 386
esp_ble_mesh_client_model_deinit (C++ 函数), 426
esp_ble_mesh_client_model_init (C++ 函数), 425
ESP_BLE_MESH_CLIENT_MODEL_RECV_PUBLISH_MSG_EVT (C++ 枚举子), 418
esp_ble_mesh_client_model_send_msg (C++ 函数), 426
ESP_BLE_MESH_CLIENT_MODEL_SEND_TIMEOUT_EVT (C++ 枚举子), 418
esp_ble_mesh_client_op_pair_t (C++ 类), 385
esp_ble_mesh_client_op_pair_t::cli_op (C++ 成员), 386
esp_ble_mesh_client_op_pair_t::status_op (C++ 成员), 386
esp_ble_mesh_client_t (C++ 类), 386
esp_ble_mesh_client_t::internal_data (C++ 成员), 386
esp_ble_mesh_client_t::model (C++ 成员), 386
esp_ble_mesh_client_t::msg_role (C++ 成员), 386
esp_ble_mesh_client_t::op_pair (C++ 成员), 386
esp_ble_mesh_client_t::op_pair_size (C++ 成员), 386
esp_ble_mesh_client_t::publish_status (C++ 成员), 386
esp_ble_mesh_comp_t (C++ 类), 381
esp_ble_mesh_comp_t::cid (C++ 成员), 381
esp_ble_mesh_comp_t::element_count (C++ 成员), 381
esp_ble_mesh_comp_t::elements (C++ 成员), 381
esp_ble_mesh_comp_t::pid (C++ 成员), 381
esp_ble_mesh_comp_t::vid (C++ 成员), 381
ESP_BLE_MESH_CONDENSATION_ERROR (C 宏), 529
ESP_BLE_MESH_CONDENSATION_WARNING (C 宏), 529
esp_ble_mesh_config_client_get_state (C++ 函数), 447
esp_ble_mesh_config_client_set_state (C++ 函数), 447
ESP_BLE_MESH_CONFIGURATION_ERROR (C 宏), 529
ESP_BLE_MESH_CONFIGURATION_WARNING (C 宏), 529
esp_ble_mesh_deinit (C++ 函数), 420
ESP_BLE_MESH_DEINIT_MESH_COMP_EVT (C++ 枚举子), 417
esp_ble_mesh_deinit_param_t (C++ 类), 377
esp_ble_mesh_deinit_param_t::erase_flash (C++ 成员), 377
esp_ble_mesh_dev_add_flag_t (C++ 类型), 409
esp_ble_mesh_dev_role_t (C++ 类型), 412
esp_ble_mesh_device_delete_t (C++ 类), 382
esp_ble_mesh_device_delete_t::addr (C++ 成员), 382
esp_ble_mesh_device_delete_t::addr_type (C++ 成员), 382
esp_ble_mesh_device_delete_t::flag (C++ 成员), 382
esp_ble_mesh_device_delete_t::uuid (C++ 成员), 382
ESP_BLE_MESH_DEVICE_DROPPED_ERROR (C 宏), 530
ESP_BLE_MESH_DEVICE_DROPPED_WARNING (C 宏), 529
ESP_BLE_MESH_DEVICE_MOVED_ERROR (C 宏), 529

ESP_BLE_MESH_DEVICE_MOVED_WARNING (C 宏), 529
ESP_BLE_MESH_DEVICE_NAME_MAX_LEN (C 宏), 389
ESP_BLE_MESH_DISPLAY_NUMBER (C++ 枚举子), 411
ESP_BLE_MESH_DISPLAY_STRING (C++ 枚举子), 411
esp_ble_mesh_elem_t (C++ 类), 377
esp_ble_mesh_elem_t::element_addr (C++ 成员), 377
esp_ble_mesh_elem_t::location (C++ 成员), 377
esp_ble_mesh_elem_t::sig_model_count (C++ 成员), 377
esp_ble_mesh_elem_t::sig_models (C++ 成员), 378
esp_ble_mesh_elem_t::vnd_model_count (C++ 成员), 378
esp_ble_mesh_elem_t::vnd_models (C++ 成员), 378
ESP_BLE_MESH_ELEMENT (C 宏), 392
ESP_BLE_MESH_ELEMENT_NOT_CALIBRATED_ERROR (C 宏), 529
ESP_BLE_MESH_ELEMENT_NOT_CALIBRATED_WARNING (C 宏), 529
ESP_BLE_MESH_EMPTY_ERROR (C 宏), 530
ESP_BLE_MESH_EMPTY_WARNING (C 宏), 530
ESP_BLE_MESH_ENTER_NUMBER (C++ 枚举子), 411
ESP_BLE_MESH_ENTER_STRING (C++ 枚举子), 411
esp_ble_mesh_fast_prov_action_t (C++ 类型), 412
esp_ble_mesh_fast_prov_info_t (C++ 类), 383
esp_ble_mesh_fast_prov_info_t::flags (C++ 成员), 384
esp_ble_mesh_fast_prov_info_t::iv_index (C++ 成员), 384
esp_ble_mesh_fast_prov_info_t::match_len (C++ 成员), 384
esp_ble_mesh_fast_prov_info_t::match_val (C++ 成员), 384
esp_ble_mesh_fast_prov_info_t::net_idx (C++ 成员), 384
esp_ble_mesh_fast_prov_info_t::offset (C++ 成员), 384
esp_ble_mesh_fast_prov_info_t::unicast_max (C++ 成员), 384
esp_ble_mesh_fast_prov_info_t::unicast_min (C++ 成员), 384
ESP_BLE_MESH_FEATURE_ALL_SUPPORTED (C 宏), 390
ESP_BLE_MESH_FEATURE_FRIEND (C 宏), 390
ESP_BLE_MESH_FEATURE_LOW_POWER (C 宏), 390
ESP_BLE_MESH_FEATURE_PROXY (C 宏), 390
ESP_BLE_MESH_FEATURE_RELAY (C 宏), 390
esp_ble_mesh_find_element (C++ 函数), 421
esp_ble_mesh_find_sig_model (C++ 函数), 421
esp_ble_mesh_find_vendor_model (C++ 函数), 421
ESP_BLE_MESH_FRIEND_DISABLED (C 宏), 390
ESP_BLE_MESH_FRIEND_ENABLED (C 宏), 390
ESP_BLE_MESH_FRIEND_FRIENDSHIP_ESTABLISH_EVT (C++ 枚举子), 416
ESP_BLE_MESH_FRIEND_FRIENDSHIP_TERMINATE_EVT (C++ 枚举子), 416
ESP_BLE_MESH_FRIEND_NOT_SUPPORTED (C 宏), 390
ESP_BLE_MESH_GATT_PROXY_DISABLED (C 宏), 390
ESP_BLE_MESH_GATT_PROXY_ENABLED (C 宏), 390
ESP_BLE_MESH_GATT_PROXY_NOT_SUPPORTED (C 宏), 390
ESP_BLE_MESH_GEN_ADMIN_ACCESS_READ (C++ 枚举子), 519
ESP_BLE_MESH_GEN_ADMIN_ACCESS_READ_WRITE (C++ 枚举子), 519
ESP_BLE_MESH_GEN_ADMIN_ACCESS_WRITE (C++ 枚举子), 519
ESP_BLE_MESH_GEN_ADMIN_NOT_USER_PROP (C++ 枚举子), 519
esp_ble_mesh_gen_admin_prop_access_t (C++ 类型), 519
esp_ble_mesh_gen_admin_prop_srv_t (C++ 类), 501
esp_ble_mesh_gen_admin_prop_srv_t::model (C++ 成员), 502
esp_ble_mesh_gen_admin_prop_srv_t::properties (C++ 成员), 502
esp_ble_mesh_gen_admin_prop_srv_t::property_count (C++ 成员), 502
esp_ble_mesh_gen_admin_prop_srv_t::rsp_ctrl (C++ 成员), 502

esp_ble_mesh_gen_admin_properties_status_cb_t (C++ 类), 493
esp_ble_mesh_gen_admin_properties_status_cb_t::property_ids (C++ 成员), 493
esp_ble_mesh_gen_admin_property_get_t (C++ 类), 488
esp_ble_mesh_gen_admin_property_get_t::property_id (C++ 成员), 488
esp_ble_mesh_gen_admin_property_set_t (C++ 类), 488
esp_ble_mesh_gen_admin_property_set_t::property_id (C++ 成员), 488
esp_ble_mesh_gen_admin_property_set_t::property_value (C++ 成员), 489
esp_ble_mesh_gen_admin_property_set_t::user_access (C++ 成员), 488
esp_ble_mesh_gen_admin_property_status_cb_t (C++ 类), 493
esp_ble_mesh_gen_admin_property_status_cb_t::op_en (C++ 成员), 493
esp_ble_mesh_gen_admin_property_status_cb_t::property_id (C++ 成员), 493
esp_ble_mesh_gen_admin_property_status_cb_t::property_value (C++ 成员), 493
esp_ble_mesh_gen_admin_property_status_cb_t::user_access (C++ 成员), 493
esp_ble_mesh_gen_battery_srv_t (C++ 类), 499
esp_ble_mesh_gen_battery_srv_t::model (C++ 成员), 499
esp_ble_mesh_gen_battery_srv_t::rsp_ctrl (C++ 成员), 499
esp_ble_mesh_gen_battery_srv_t::state (C++ 成员), 499
esp_ble_mesh_gen_battery_state_t (C++ 类), 499
esp_ble_mesh_gen_battery_state_t::battery_flags (C++ 成员), 499
esp_ble_mesh_gen_battery_state_t::battery_level (C++ 成员), 499
esp_ble_mesh_gen_battery_state_t::time_to_charge (C++ 成员), 499
esp_ble_mesh_gen_battery_state_t::time_to_discharge (C++ 成员), 499
esp_ble_mesh_gen_battery_status_cb_t (C++ 类), 491
esp_ble_mesh_gen_battery_status_cb_t::battery_level (C++ 成员), 491
esp_ble_mesh_gen_battery_status_cb_t::flags (C++ 成员), 492
esp_ble_mesh_gen_battery_status_cb_t::time_to_charge (C++ 成员), 492
esp_ble_mesh_gen_battery_status_cb_t::time_to_discharge (C++ 成员), 491
esp_ble_mesh_gen_client_prop_srv_t (C++ 类), 502
esp_ble_mesh_gen_client_prop_srv_t::id_count (C++ 成员), 502
esp_ble_mesh_gen_client_prop_srv_t::model (C++ 成员), 502
esp_ble_mesh_gen_client_prop_srv_t::property_ids (C++ 成员), 502
esp_ble_mesh_gen_client_prop_srv_t::rsp_ctrl (C++ 成员), 502
esp_ble_mesh_gen_client_properties_get_t (C++ 类), 489
esp_ble_mesh_gen_client_properties_get_t::property_id (C++ 成员), 489
esp_ble_mesh_gen_client_properties_status_cb_t (C++ 类), 494
esp_ble_mesh_gen_client_properties_status_cb_t::property_i (C++ 成员), 494
esp_ble_mesh_gen_client_status_cb_t (C++ 类型), 480
esp_ble_mesh_gen_client_status_cb_t::admin_properties_stat (C++ 成员), 481
esp_ble_mesh_gen_client_status_cb_t::admin_property_status (C++ 成员), 481
esp_ble_mesh_gen_client_status_cb_t::battery_status (C++ 成员), 481
esp_ble_mesh_gen_client_status_cb_t::client_properties_sta (C++ 成员), 481
esp_ble_mesh_gen_client_status_cb_t::def_trans_time_status (C++ 成员), 481
esp_ble_mesh_gen_client_status_cb_t::level_status

(C++ 成员), 480
esp_ble_mesh_gen_client_status_cb_t::location_global_status (C++ 成员), 481
esp_ble_mesh_gen_client_status_cb_t::location_local_status (C++ 成员), 481
esp_ble_mesh_gen_client_status_cb_t::manufacturer_properties (C++ 成员), 481
esp_ble_mesh_gen_client_status_cb_t::manufacturer_property_status (C++ 成员), 481
esp_ble_mesh_gen_client_status_cb_t::onoff_status (C++ 成员), 480
esp_ble_mesh_gen_client_status_cb_t::onpowerup_status (C++ 成员), 481
esp_ble_mesh_gen_client_status_cb_t::power_default_status (C++ 成员), 481
esp_ble_mesh_gen_client_status_cb_t::power_last_status (C++ 成员), 481
esp_ble_mesh_gen_client_status_cb_t::power_level_status (C++ 成员), 481
esp_ble_mesh_gen_client_status_cb_t::power_range_status (C++ 成员), 481
esp_ble_mesh_gen_client_status_cb_t::user_properties (C++ 成员), 481
esp_ble_mesh_gen_client_status_cb_t::user_property_status (C++ 成员), 481
esp_ble_mesh_gen_def_trans_time_set_t (C++ 类), 486
esp_ble_mesh_gen_def_trans_time_set_t::trans_time (C++ 成员), 486
esp_ble_mesh_gen_def_trans_time_srv_t (C++ 类), 496
esp_ble_mesh_gen_def_trans_time_srv_t::model (C++ 成员), 496
esp_ble_mesh_gen_def_trans_time_srv_t::rsp_ctrl (C++ 成员), 496
esp_ble_mesh_gen_def_trans_time_srv_t::state (C++ 成员), 497
esp_ble_mesh_gen_def_trans_time_state_t (C++ 类), 496
esp_ble_mesh_gen_def_trans_time_state_t::trans_time (C++ 成员), 496
esp_ble_mesh_gen_def_trans_time_status_cb_t (C++ 类), 490
esp_ble_mesh_gen_def_trans_time_status_cb_t::trans_time (C++ 成员), 490
esp_ble_mesh_gen_delta_set_t (C++ 类), 485
esp_ble_mesh_gen_delta_set_t::delay (C++ 成员), 485
esp_ble_mesh_gen_delta_set_t::level (C++ 成员), 485
esp_ble_mesh_gen_delta_set_t::op_en (C++ 成员), 485
esp_ble_mesh_gen_delta_set_t::tid (C++ 成员), 485
esp_ble_mesh_gen_delta_set_t::trans_time (C++ 成员), 485
esp_ble_mesh_gen_level_set_t (C++ 类), 485
esp_ble_mesh_gen_level_set_t::delay (C++ 成员), 485
esp_ble_mesh_gen_level_set_t::level (C++ 成员), 485
esp_ble_mesh_gen_level_set_t::op_en (C++ 成员), 485
esp_ble_mesh_gen_level_set_t::tid (C++ 成员), 485
esp_ble_mesh_gen_level_set_t::trans_time (C++ 成员), 485
esp_ble_mesh_gen_level_srv_t (C++ 类), 496
esp_ble_mesh_gen_level_srv_t::last (C++ 成员), 496
esp_ble_mesh_gen_level_srv_t::model (C++ 成员), 496
esp_ble_mesh_gen_level_srv_t::rsp_ctrl (C++ 成员), 496
esp_ble_mesh_gen_level_srv_t::state (C++ 成员), 496
esp_ble_mesh_gen_level_srv_t::transition (C++ 成员), 496
esp_ble_mesh_gen_level_srv_t::tt_delta_level (C++ 成员), 496
esp_ble_mesh_gen_level_state_t (C++ 类), 495
esp_ble_mesh_gen_level_state_t::last_delta (C++ 成员), 495
esp_ble_mesh_gen_level_state_t::last_level

(C++ 成员), 495
esp_ble_mesh_gen_level_state_t::level (C++ 成员), 495
esp_ble_mesh_gen_level_state_t::move_start (C++ 成员), 496
esp_ble_mesh_gen_level_state_t::positive (C++ 成员), 496
esp_ble_mesh_gen_level_state_t::target_level (C++ 成员), 495
esp_ble_mesh_gen_level_status_cb_t (C++ 类), 490
esp_ble_mesh_gen_level_status_cb_t::op_en (C++ 成员), 490
esp_ble_mesh_gen_level_status_cb_t::present_level (C++ 成员), 490
esp_ble_mesh_gen_level_status_cb_t::remain_time (C++ 成员), 490
esp_ble_mesh_gen_level_status_cb_t::target_level (C++ 成员), 490
esp_ble_mesh_gen_loc_global_set_t (C++ 类), 487
esp_ble_mesh_gen_loc_global_set_t::global_altitude (C++ 成员), 487
esp_ble_mesh_gen_loc_global_set_t::global_latitude (C++ 成员), 487
esp_ble_mesh_gen_loc_global_set_t::global_longitude (C++ 成员), 487
esp_ble_mesh_gen_loc_global_status_cb_t (C++ 类), 492
esp_ble_mesh_gen_loc_global_status_cb_t::global_altitude (C++ 成员), 492
esp_ble_mesh_gen_loc_global_status_cb_t::global_latitude (C++ 成员), 492
esp_ble_mesh_gen_loc_global_status_cb_t::global_longitude (C++ 成员), 492
esp_ble_mesh_gen_loc_local_set_t (C++ 类), 487
esp_ble_mesh_gen_loc_local_set_t::floor_number (C++ 成员), 488
esp_ble_mesh_gen_loc_local_set_t::local_altitude (C++ 成员), 488
esp_ble_mesh_gen_loc_local_set_t::local_east (C++ 成员), 487
esp_ble_mesh_gen_loc_local_set_t::local_north (C++ 成员), 487
esp_ble_mesh_gen_loc_local_set_t::uncertainty (C++ 成员), 488
esp_ble_mesh_gen_loc_local_status_cb_t (C++ 类), 492
esp_ble_mesh_gen_loc_local_status_cb_t::floor_number (C++ 成员), 492
esp_ble_mesh_gen_loc_local_status_cb_t::local_altitude (C++ 成员), 492
esp_ble_mesh_gen_loc_local_status_cb_t::local_east (C++ 成员), 492
esp_ble_mesh_gen_loc_local_status_cb_t::local_north (C++ 成员), 492
esp_ble_mesh_gen_loc_local_status_cb_t::uncertainty (C++ 成员), 492
esp_ble_mesh_gen_location_setup_srv_t (C++ 类), 500
esp_ble_mesh_gen_location_setup_srv_t::model (C++ 成员), 500
esp_ble_mesh_gen_location_setup_srv_t::rsp_ctrl (C++ 成员), 500
esp_ble_mesh_gen_location_setup_srv_t::state (C++ 成员), 501
esp_ble_mesh_gen_location_srv_t (C++ 类), 500
esp_ble_mesh_gen_location_srv_t::model (C++ 成员), 500
esp_ble_mesh_gen_location_srv_t::rsp_ctrl (C++ 成员), 500
esp_ble_mesh_gen_location_srv_t::state (C++ 成员), 500
esp_ble_mesh_gen_location_state_t (C++ 类), 499
esp_ble_mesh_gen_location_state_t::floor_number (C++ 成员), 500
esp_ble_mesh_gen_location_state_t::global_altitude (C++ 成员), 500
esp_ble_mesh_gen_location_state_t::global_latitude (C++ 成员), 500
esp_ble_mesh_gen_location_state_t::global_longitude (C++ 成员), 500

esp_ble_mesh_gen_location_state_t::local_altitude (C++ 成员), 500
esp_ble_mesh_gen_location_state_t::local_east (C++ 成员), 500
esp_ble_mesh_gen_location_state_t::local_north (C++ 成员), 500
esp_ble_mesh_gen_location_state_t::uncertainty (C++ 成员), 500
ESP_BLE_MESH_GEN_MANU_ACCESS_READ (C++ 枚举子), 519
ESP_BLE_MESH_GEN_MANU_NOT_USER_PROP (C++ 枚举子), 519
esp_ble_mesh_gen_manu_prop_access_t (C++ 类型), 519
esp_ble_mesh_gen_manu_prop_srv_t (C++ 类), 502
esp_ble_mesh_gen_manu_prop_srv_t::model (C++ 成员), 502
esp_ble_mesh_gen_manu_prop_srv_t::properties (C++ 成员), 502
esp_ble_mesh_gen_manu_prop_srv_t::property_count (C++ 成员), 502
esp_ble_mesh_gen_manu_prop_srv_t::rsp_ctrl (C++ 成员), 502
esp_ble_mesh_gen_manufacturer_properties_status_cb_t (C++ 类), 493
esp_ble_mesh_gen_manufacturer_properties_status_cb_t::properties (C++ 成员), 494
esp_ble_mesh_gen_manufacturer_property_get_t (C++ 类), 489
esp_ble_mesh_gen_manufacturer_property_get_t::property_id (C++ 成员), 489
esp_ble_mesh_gen_manufacturer_property_set_t (C++ 类), 489
esp_ble_mesh_gen_manufacturer_property_set_t::property_id (C++ 成员), 489
esp_ble_mesh_gen_manufacturer_property_set_t::user_access (C++ 成员), 489
esp_ble_mesh_gen_manufacturer_property_status_cb_t (C++ 类), 494
esp_ble_mesh_gen_manufacturer_property_status_cb_t::property_id (C++ 成员), 494
esp_ble_mesh_gen_manufacturer_property_status_cb_t::property_len (C++ 成员), 494
esp_ble_mesh_gen_manufacturer_property_status_cb_t::property_val (C++ 成员), 494
esp_ble_mesh_gen_manufacturer_property_status_cb_t::user_access (C++ 成员), 494
esp_ble_mesh_gen_move_set_t (C++ 类), 485
esp_ble_mesh_gen_move_set_t::delay (C++ 成员), 486
esp_ble_mesh_gen_move_set_t::delta_level (C++ 成员), 486
esp_ble_mesh_gen_move_set_t::op_en (C++ 成员), 486
esp_ble_mesh_gen_move_set_t::tid (C++ 成员), 486
esp_ble_mesh_gen_move_set_t::trans_time (C++ 成员), 486
esp_ble_mesh_gen_onoff_set_t (C++ 类), 484
esp_ble_mesh_gen_onoff_set_t::delay (C++ 成员), 484
esp_ble_mesh_gen_onoff_set_t::onoff (C++ 成员), 484
esp_ble_mesh_gen_onoff_set_t::op_en (C++ 成员), 484
esp_ble_mesh_gen_onoff_set_t::tid (C++ 成员), 484
esp_ble_mesh_gen_onoff_set_t::trans_time (C++ 成员), 484
esp_ble_mesh_gen_onoff_srv_t (C++ 类), 495
esp_ble_mesh_gen_onoff_srv_t::last (C++ 成员), 495
esp_ble_mesh_gen_onoff_srv_t::model (C++ 成员), 495
esp_ble_mesh_gen_onoff_srv_t::rsp_ctrl (C++ 成员), 495
esp_ble_mesh_gen_onoff_srv_t::state (C++ 成员), 495
esp_ble_mesh_gen_onoff_srv_t::transition (C++ 成员), 495
esp_ble_mesh_gen_onoff_state_t (C++ 类), 494
esp_ble_mesh_gen_onoff_state_t::onoff (C++ 成员), 495

esp_ble_mesh_gen_onoff_state_t::target_onoff (C++ 成员), 495
esp_ble_mesh_gen_onoff_status_cb_t (C++ 类), 489
esp_ble_mesh_gen_onoff_status_cb_t::op_en (C++ 成员), 489
esp_ble_mesh_gen_onoff_status_cb_t::present_onoff (C++ 成员), 489
esp_ble_mesh_gen_onoff_status_cb_t::remain_time (C++ 成员), 490
esp_ble_mesh_gen_onoff_status_cb_t::target_onoff (C++ 成员), 489
esp_ble_mesh_gen_onpowerup_set_t (C++ 类), 486
esp_ble_mesh_gen_onpowerup_set_t::onpowerup (C++ 成员), 486
esp_ble_mesh_gen_onpowerup_state_t (C++ 类), 497
esp_ble_mesh_gen_onpowerup_state_t::onpowerup (C++ 成员), 497
esp_ble_mesh_gen_onpowerup_status_cb_t (C++ 类), 490
esp_ble_mesh_gen_onpowerup_status_cb_t::onpowerup (C++ 成员), 490
esp_ble_mesh_gen_power_default_set_t (C++ 类), 487
esp_ble_mesh_gen_power_default_set_t::power (C++ 成员), 487
esp_ble_mesh_gen_power_default_status_cb_t (C++ 类), 491
esp_ble_mesh_gen_power_default_status_cb_t::power (C++ 成员), 491
esp_ble_mesh_gen_power_last_status_cb_t (C++ 类), 491
esp_ble_mesh_gen_power_last_status_cb_t::power (C++ 成员), 491
esp_ble_mesh_gen_power_level_set_t (C++ 类), 486
esp_ble_mesh_gen_power_level_set_t::delay (C++ 成员), 487
esp_ble_mesh_gen_power_level_set_t::op_en (C++ 成员), 486
esp_ble_mesh_gen_power_level_set_t::power (C++ 成员), 486
esp_ble_mesh_gen_power_level_set_t::tid (C++ 成员), 486
esp_ble_mesh_gen_power_level_set_t::trans_time (C++ 成员), 486
esp_ble_mesh_gen_power_level_setup_srv_t (C++ 类), 498
esp_ble_mesh_gen_power_level_setup_srv_t::model (C++ 成员), 499
esp_ble_mesh_gen_power_level_setup_srv_t::rsp_ctrl (C++ 成员), 499
esp_ble_mesh_gen_power_level_setup_srv_t::state (C++ 成员), 499
esp_ble_mesh_gen_power_level_srv_t (C++ 类), 498
esp_ble_mesh_gen_power_level_srv_t::last (C++ 成员), 498
esp_ble_mesh_gen_power_level_srv_t::model (C++ 成员), 498
esp_ble_mesh_gen_power_level_srv_t::rsp_ctrl (C++ 成员), 498
esp_ble_mesh_gen_power_level_srv_t::state (C++ 成员), 498
esp_ble_mesh_gen_power_level_srv_t::transition (C++ 成员), 498
esp_ble_mesh_gen_power_level_srv_t::tt_delta_level (C++ 成员), 498
esp_ble_mesh_gen_power_level_state_t (C++ 类), 497
esp_ble_mesh_gen_power_level_state_t::power_actual (C++ 成员), 498
esp_ble_mesh_gen_power_level_state_t::power_default (C++ 成员), 498
esp_ble_mesh_gen_power_level_state_t::power_last (C++ 成员), 498
esp_ble_mesh_gen_power_level_state_t::power_range_max (C++ 成员), 498
esp_ble_mesh_gen_power_level_state_t::power_range_min (C++ 成员), 498
esp_ble_mesh_gen_power_level_state_t::status_code (C++ 成员), 498

esp_ble_mesh_gen_power_level_state_t::target_power_actual (C++ 成员), 498
esp_ble_mesh_gen_power_level_status_cb_t (C++ 类), 490
esp_ble_mesh_gen_power_level_status_cb_t::op_en (C++ 成员), 490
esp_ble_mesh_gen_power_level_status_cb_t::present_power (C++ 成员), 490
esp_ble_mesh_gen_power_level_status_cb_t::remain_time (C++ 成员), 491
esp_ble_mesh_gen_power_level_status_cb_t::target_power (C++ 成员), 491
esp_ble_mesh_gen_power_onoff_setup_srv_t (C++ 类), 497
esp_ble_mesh_gen_power_onoff_setup_srv_t::model (C++ 成员), 497
esp_ble_mesh_gen_power_onoff_setup_srv_t::rsp_ctrl (C++ 成员), 497
esp_ble_mesh_gen_power_onoff_setup_srv_t::state (C++ 成员), 497
esp_ble_mesh_gen_power_onoff_srv_t (C++ 类), 497
esp_ble_mesh_gen_power_onoff_srv_t::model (C++ 成员), 497
esp_ble_mesh_gen_power_onoff_srv_t::rsp_ctrl (C++ 成员), 497
esp_ble_mesh_gen_power_onoff_srv_t::state (C++ 成员), 497
esp_ble_mesh_gen_power_range_set_t (C++ 类), 487
esp_ble_mesh_gen_power_range_set_t::range_max (C++ 成员), 487
esp_ble_mesh_gen_power_range_set_t::range_min (C++ 成员), 487
esp_ble_mesh_gen_power_range_status_cb_t (C++ 类), 491
esp_ble_mesh_gen_power_range_status_cb_t::range_max (C++ 成员), 491
esp_ble_mesh_gen_power_range_status_cb_t::range_min (C++ 成员), 491
esp_ble_mesh_gen_power_range_status_cb_t::status_code (C++ 成员), 491
ESP_BLE_MESH_GEN_USER_ACCESS_PROHIBIT (C++ 枚举子), 518
ESP_BLE_MESH_GEN_USER_ACCESS_READ (C++ 枚举子), 518
ESP_BLE_MESH_GEN_USER_ACCESS_READ_WRITE (C++ 枚举子), 519
ESP_BLE_MESH_GEN_USER_ACCESS_WRITE (C++ 枚举子), 518
esp_ble_mesh_gen_user_prop_access_t (C++ 类型), 518
esp_ble_mesh_gen_user_prop_srv_t (C++ 类), 501
esp_ble_mesh_gen_user_prop_srv_t::model (C++ 成员), 501
esp_ble_mesh_gen_user_prop_srv_t::properties (C++ 成员), 501
esp_ble_mesh_gen_user_prop_srv_t::property_count (C++ 成员), 501
esp_ble_mesh_gen_user_prop_srv_t::rsp_ctrl (C++ 成员), 501
esp_ble_mesh_gen_user_properties_status_cb_t (C++ 类), 492
esp_ble_mesh_gen_user_properties_status_cb_t::property_ids (C++ 成员), 493
esp_ble_mesh_gen_user_property_get_t (C++ 类), 488
esp_ble_mesh_gen_user_property_get_t::property_id (C++ 成员), 488
esp_ble_mesh_gen_user_property_set_t (C++ 类), 488
esp_ble_mesh_gen_user_property_set_t::property_id (C++ 成员), 488
esp_ble_mesh_gen_user_property_set_t::property_value (C++ 成员), 488
esp_ble_mesh_gen_user_property_status_cb_t (C++ 类), 493
esp_ble_mesh_gen_user_property_status_cb_t::op_en (C++ 成员), 493
esp_ble_mesh_gen_user_property_status_cb_t::property_id (C++ 成员), 493
esp_ble_mesh_gen_user_property_status_cb_t::property_value (C++ 成员), 493

esp_ble_mesh_gen_user_property_status_cb_t::user_access (C++ 成员), 493
esp_ble_mesh_generic_client_cb_event_t (C++ 类型), 518
esp_ble_mesh_generic_client_cb_param_t (C++ 类), 494
esp_ble_mesh_generic_client_cb_param_t::error_code (C++ 成员), 494
esp_ble_mesh_generic_client_cb_param_t::params (C++ 成员), 494
esp_ble_mesh_generic_client_cb_param_t::status_cb (C++ 成员), 494
esp_ble_mesh_generic_client_cb_t (C++ 类型), 518
ESP_BLE_MESH_GENERIC_CLIENT_EVT_MAX (C++ 枚举子), 518
esp_ble_mesh_generic_client_get_state (C++ 函数), 478
ESP_BLE_MESH_GENERIC_CLIENT_GET_STATE_EVT (C++ 枚举子), 518
esp_ble_mesh_generic_client_get_state_t (C++ 类型), 479
esp_ble_mesh_generic_client_get_state_t::admin_property_get (C++ 成员), 479
esp_ble_mesh_generic_client_get_state_t::client_property_get (C++ 成员), 479
esp_ble_mesh_generic_client_get_state_t::manufacturer_property_get (C++ 成员), 479
esp_ble_mesh_generic_client_get_state_t::user_property_get (C++ 成员), 479
ESP_BLE_MESH_GENERIC_CLIENT_PUBLISH_EVT (C++ 枚举子), 518
esp_ble_mesh_generic_client_set_state (C++ 函数), 478
ESP_BLE_MESH_GENERIC_CLIENT_SET_STATE_EVT (C++ 枚举子), 518
esp_ble_mesh_generic_client_set_state_t (C++ 类型), 479
esp_ble_mesh_generic_client_set_state_t::admin_property_set (C++ 成员), 480
esp_ble_mesh_generic_client_set_state_t::def_trans_time (C++ 成员), 479
esp_ble_mesh_generic_client_set_state_t::delta_set (C++ 成员), 479
esp_ble_mesh_generic_client_set_state_t::level_set (C++ 成员), 479
esp_ble_mesh_generic_client_set_state_t::loc_global_set (C++ 成员), 480
esp_ble_mesh_generic_client_set_state_t::loc_local_set (C++ 成员), 480
esp_ble_mesh_generic_client_set_state_t::manufacturer_property_set (C++ 成员), 480
esp_ble_mesh_generic_client_set_state_t::move_set (C++ 成员), 479
esp_ble_mesh_generic_client_set_state_t::onoff_set (C++ 成员), 479
esp_ble_mesh_generic_client_set_state_t::power_default_set (C++ 成员), 480
esp_ble_mesh_generic_client_set_state_t::power_level_set (C++ 成员), 480
esp_ble_mesh_generic_client_set_state_t::power_range_set (C++ 成员), 480
esp_ble_mesh_generic_client_set_state_t::power_set (C++ 成员), 480
esp_ble_mesh_generic_client_set_state_t::user_property_set (C++ 成员), 480
ESP_BLE_MESH_GENERIC_CLIENT_TIMEOUT_EVT (C++ 枚举子), 518
ESP_BLE_MESH_GENERIC_LEVEL_STATE (C++ 枚举子), 418
esp_ble_mesh_generic_message_opcode_t (C++ 类型), 409
ESP_BLE_MESH_GENERIC_ONOFF_STATE (C++ 枚举子), 418
ESP_BLE_MESH_GENERIC_ONPOWERUP_STATE (C++ 枚举子), 418
ESP_BLE_MESH_GENERIC_POWER_ACTUAL_STATE (C++ 枚举子), 418
esp_ble_mesh_generic_property_t (C++ 类), 501
esp_ble_mesh_generic_property_t::admin_access (C++ 成员), 501
esp_ble_mesh_generic_property_t::id (C++ 成员), 501
esp_ble_mesh_generic_property_t::manu_access

(C++ 成员), 501
esp_ble_mesh_generic_property_t::user_access (C++ 成员), 501
esp_ble_mesh_generic_property_t::val (C++ 成员), 501
esp_ble_mesh_generic_server_cb_event_t (C++ 类型), 519
esp_ble_mesh_generic_server_cb_param_t (C++ 类), 511
esp_ble_mesh_generic_server_cb_param_t::ctx (C++ 成员), 511
esp_ble_mesh_generic_server_cb_param_t::model (C++ 成员), 511
esp_ble_mesh_generic_server_cb_param_t::value (C++ 成员), 511
esp_ble_mesh_generic_server_cb_t (C++ 类型), 518
esp_ble_mesh_generic_server_cb_value_t (C++ 类型), 484
esp_ble_mesh_generic_server_cb_value_t::get (C++ 成员), 484
esp_ble_mesh_generic_server_cb_value_t::set (C++ 成员), 484
esp_ble_mesh_generic_server_cb_value_t::state_change (C++ 成员), 484
ESP_BLE_MESH_GENERIC_SERVER_EVT_MAX (C++ 枚举子), 519
ESP_BLE_MESH_GENERIC_SERVER_RECV_GET_MSG_EVT (C++ 枚举子), 519
esp_ble_mesh_generic_server_recv_get_msg_t (C++ 类型), 482
esp_ble_mesh_generic_server_recv_get_msg_t::admin_property (C++ 成员), 483
esp_ble_mesh_generic_server_recv_get_msg_t::client_properties (C++ 成员), 483
esp_ble_mesh_generic_server_recv_get_msg_t::manu_property (C++ 成员), 483
esp_ble_mesh_generic_server_recv_get_msg_t::user_property (C++ 成员), 483
ESP_BLE_MESH_GENERIC_SERVER_RECV_SET_MSG_EVT (C++ 枚举子), 519
esp_ble_mesh_generic_server_recv_set_msg_t (C++ 类型), 483
esp_ble_mesh_generic_server_recv_set_msg_t::admin_property (C++ 成员), 484
esp_ble_mesh_generic_server_recv_set_msg_t::def_trans_time (C++ 成员), 483
esp_ble_mesh_generic_server_recv_set_msg_t::delta (C++ 成员), 483
esp_ble_mesh_generic_server_recv_set_msg_t::level (C++ 成员), 483
esp_ble_mesh_generic_server_recv_set_msg_t::location_global (C++ 成员), 483
esp_ble_mesh_generic_server_recv_set_msg_t::location_local (C++ 成员), 483
esp_ble_mesh_generic_server_recv_set_msg_t::manu_property (C++ 成员), 484
esp_ble_mesh_generic_server_recv_set_msg_t::move (C++ 成员), 483
esp_ble_mesh_generic_server_recv_set_msg_t::onoff (C++ 成员), 483
esp_ble_mesh_generic_server_recv_set_msg_t::onpowerup (C++ 成员), 483
esp_ble_mesh_generic_server_recv_set_msg_t::power_default (C++ 成员), 483
esp_ble_mesh_generic_server_recv_set_msg_t::power_level (C++ 成员), 483
esp_ble_mesh_generic_server_recv_set_msg_t::power_range (C++ 成员), 483
esp_ble_mesh_generic_server_recv_set_msg_t::user_property (C++ 成员), 484
ESP_BLE_MESH_GENERIC_SERVER_STATE_CHANGE_EVT (C++ 枚举子), 519
esp_ble_mesh_generic_server_state_change_t (C++ 类型), 481
esp_ble_mesh_generic_server_state_change_t::admin_property (C++ 成员), 482
esp_ble_mesh_generic_server_state_change_t::def_trans_time (C++ 成员), 482
esp_ble_mesh_generic_server_state_change_t::delta_set (C++ 成员), 482
esp_ble_mesh_generic_server_state_change_t::level_set (C++ 成员), 482
esp_ble_mesh_generic_server_state_change_t::loc_global_set

(C++ 成员), 482
esp_ble_mesh_generic_server_state_change_t::local_net_idx (C++ 成员), 482
esp_ble_mesh_generic_server_state_change_t::mask (C++ 成员), 482
esp_ble_mesh_generic_server_state_change_t::model (C++ 成员), 482
esp_ble_mesh_generic_server_state_change_t::onoff (C++ 成员), 482
esp_ble_mesh_generic_server_state_change_t::onpowerup (C++ 成员), 482
esp_ble_mesh_generic_server_state_change_t::power_default (C++ 成员), 482
esp_ble_mesh_generic_server_state_change_t::power_level (C++ 成员), 482
esp_ble_mesh_generic_server_state_change_t::power_range_max (C++ 成员), 482
esp_ble_mesh_generic_server_state_change_t::user_property_id (C++ 成员), 482
esp_ble_mesh_get_composition_data (C++ 函数), 421
esp_ble_mesh_get_element_count (C++ 函数), 421
esp_ble_mesh_get_fast_prov_app_key (C++ 函数), 436
esp_ble_mesh_get_model_publish_period (C++ 函数), 420
esp_ble_mesh_get_primary_element_address (C++ 函数), 420
ESP_BLE_MESH_GET_PUBLISH_TRANSMIT_COUNT (C 宏), 391
ESP_BLE_MESH_GET_PUBLISH_TRANSMIT_INTERVAL (C 宏), 392
ESP_BLE_MESH_GET_SENSOR_DATA_FORMAT (C 宏), 605
ESP_BLE_MESH_GET_SENSOR_DATA_LENGTH (C 宏), 606
ESP_BLE_MESH_GET_SENSOR_DATA_PROPERTY_ID (C 宏), 606
ESP_BLE_MESH_GET_TRANSMIT_COUNT (C 宏), 391
ESP_BLE_MESH_GET_TRANSMIT_INTERVAL (C 宏), 391
esp_ble_mesh_health_attention_off_cb_t (C++ 类), 527
esp_ble_mesh_health_attention_off_cb_t::model (C++ 成员), 527
esp_ble_mesh_health_attention_on_cb_t (C++ 类), 527
esp_ble_mesh_health_attention_on_cb_t::model (C++ 成员), 527
esp_ble_mesh_health_attention_on_cb_t::time (C++ 成员), 527
esp_ble_mesh_health_attention_set_t (C++ 类), 524
esp_ble_mesh_health_attention_set_t::attention (C++ 成员), 524
esp_ble_mesh_health_attention_status_cb_t (C++ 类), 526
esp_ble_mesh_health_attention_status_cb_t::attention (C++ 成员), 526
esp_ble_mesh_health_client_cb_event_t (C++ 类型), 530
esp_ble_mesh_health_client_cb_param_t (C++ 类), 526
esp_ble_mesh_health_client_cb_param_t::error_code (C++ 成员), 526
esp_ble_mesh_health_client_cb_param_t::params (C++ 成员), 526
esp_ble_mesh_health_client_cb_param_t::status_cb (C++ 成员), 526
esp_ble_mesh_health_client_cb_t (C++ 类型), 530
esp_ble_mesh_health_client_common_cb_param_t (C++ 类型), 522
esp_ble_mesh_health_client_common_cb_param_t::attention_st (C++ 成员), 522
esp_ble_mesh_health_client_common_cb_param_t::current_stat (C++ 成员), 522
esp_ble_mesh_health_client_common_cb_param_t::fault_status (C++ 成员), 522
esp_ble_mesh_health_client_common_cb_param_t::period_statu (C++ 成员), 522
ESP_BLE_MESH_HEALTH_CLIENT_EVT_MAX (C++ 枚举子), 531
esp_ble_mesh_health_client_get_state (C++

函数), 520
ESP_BLE_MESH_HEALTH_CLIENT_GET_STATE_EVT (C++ 枚举子), 531
esp_ble_mesh_health_client_get_state_t (C++ 类型), 521
esp_ble_mesh_health_client_get_state_t::fault_get (C++ 成员), 521
ESP_BLE_MESH_HEALTH_CLIENT_PUBLISH_EVT (C++ 枚举子), 531
esp_ble_mesh_health_client_set_state (C++ 函数), 520
ESP_BLE_MESH_HEALTH_CLIENT_SET_STATE_EVT (C++ 枚举子), 531
esp_ble_mesh_health_client_set_state_t (C++ 类型), 521
esp_ble_mesh_health_client_set_state_t::attention_set (C++ 成员), 522
esp_ble_mesh_health_client_set_state_t::fault_clear (C++ 成员), 522
esp_ble_mesh_health_client_set_state_t::fault_test (C++ 成员), 522
esp_ble_mesh_health_client_set_state_t::period_set (C++ 成员), 522
ESP_BLE_MESH_HEALTH_CLIENT_TIMEOUT_EVT (C++ 枚举子), 531
esp_ble_mesh_health_current_status_cb_t (C++ 类), 525
esp_ble_mesh_health_current_status_cb_t::company_id (C++ 成员), 525
esp_ble_mesh_health_current_status_cb_t::fault_array (C++ 成员), 525
esp_ble_mesh_health_current_status_cb_t::test_id (C++ 成员), 525
ESP_BLE_MESH_HEALTH_FAULT_ARRAY_SIZE (C 宏), 530
esp_ble_mesh_health_fault_clear_cb_t (C++ 类), 526
esp_ble_mesh_health_fault_clear_cb_t::company_id (C++ 成员), 526
esp_ble_mesh_health_fault_clear_cb_t::model (C++ 成员), 526
esp_ble_mesh_health_fault_clear_t (C++ 类), 525
esp_ble_mesh_health_fault_clear_t::company_id (C++ 成员), 525
esp_ble_mesh_health_fault_get_t (C++ 类), 524
esp_ble_mesh_health_fault_get_t::company_id (C++ 成员), 524
esp_ble_mesh_health_fault_status_cb_t (C++ 类), 525
esp_ble_mesh_health_fault_status_cb_t::company_id (C++ 成员), 525
esp_ble_mesh_health_fault_status_cb_t::fault_array (C++ 成员), 525
esp_ble_mesh_health_fault_status_cb_t::test_id (C++ 成员), 525
esp_ble_mesh_health_fault_test_cb_t (C++ 类), 527
esp_ble_mesh_health_fault_test_cb_t::company_id (C++ 成员), 527
esp_ble_mesh_health_fault_test_cb_t::model (C++ 成员), 527
esp_ble_mesh_health_fault_test_cb_t::test_id (C++ 成员), 527
esp_ble_mesh_health_fault_test_t (C++ 类), 524
esp_ble_mesh_health_fault_test_t::company_id (C++ 成员), 525
esp_ble_mesh_health_fault_test_t::test_id (C++ 成员), 525
esp_ble_mesh_health_fault_update_comp_cb_t (C++ 类), 526
esp_ble_mesh_health_fault_update_comp_cb_t::element (C++ 成员), 526
esp_ble_mesh_health_fault_update_comp_cb_t::error_code (C++ 成员), 526
esp_ble_mesh_health_model_status_t (C++ 类型), 409
esp_ble_mesh_health_period_set_t (C++ 类), 524
esp_ble_mesh_health_period_set_t::fast_period_divisor (C++ 成员), 524
esp_ble_mesh_health_period_status_cb_t (C++ 类), 525

esp_ble_mesh_health_period_status_cb_t::fast_period_divisor (C++ 成员), 526
ESP_BLE_MESH_HEALTH_PUB_DEFINE (C 宏), 528
ESP_BLE_MESH_HEALTH_SERVER_ATTENTION_OFF_EVT (C++ 枚举子), 531
ESP_BLE_MESH_HEALTH_SERVER_ATTENTION_ON_EVT (C++ 枚举子), 531
esp_ble_mesh_health_server_cb_event_t (C++ 类型), 531
esp_ble_mesh_health_server_cb_param_t (C++ 类型), 522
esp_ble_mesh_health_server_cb_param_t::attention_off (C++ 成员), 523
esp_ble_mesh_health_server_cb_param_t::attention_on (C++ 成员), 522
esp_ble_mesh_health_server_cb_param_t::fault_clear (C++ 成员), 522
esp_ble_mesh_health_server_cb_param_t::fault_test (C++ 成员), 522
esp_ble_mesh_health_server_cb_param_t::fault_update_comp (C++ 成员), 522
esp_ble_mesh_health_server_cb_t (C++ 类型), 530
ESP_BLE_MESH_HEALTH_SERVER_EVT_MAX (C++ 枚举子), 531
ESP_BLE_MESH_HEALTH_SERVER_FAULT_CLEAR_EVT (C++ 枚举子), 531
ESP_BLE_MESH_HEALTH_SERVER_FAULT_TEST_EVT (C++ 枚举子), 531
esp_ble_mesh_health_server_fault_update (C++ 函数), 521
ESP_BLE_MESH_HEALTH_SERVER_FAULT_UPDATE_COMP_EVT (C++ 枚举子), 531
esp_ble_mesh_health_srv_cb_t (C++ 类), 523
esp_ble_mesh_health_srv_cb_t::attention_off (C++ 成员), 523
esp_ble_mesh_health_srv_cb_t::attention_on (C++ 成员), 523
esp_ble_mesh_health_srv_cb_t::fault_clear (C++ 成员), 523
esp_ble_mesh_health_srv_cb_t::fault_test (C++ 成员), 523
esp_ble_mesh_health_srv_t (C++ 类), 523
esp_ble_mesh_health_srv_t::attention_timer (C++ 成员), 524
esp_ble_mesh_health_srv_t::attention_timer_start (C++ 成员), 524
esp_ble_mesh_health_srv_t::health_cb (C++ 成员), 524
esp_ble_mesh_health_srv_t::health_test (C++ 成员), 524
esp_ble_mesh_health_srv_t::model (C++ 成员), 524
ESP_BLE_MESH_HEALTH_STANDARD_TEST (C 宏), 528
esp_ble_mesh_health_test_t (C++ 类), 523
esp_ble_mesh_health_test_t::company_id (C++ 成员), 523
esp_ble_mesh_health_test_t::current_faults (C++ 成员), 523
esp_ble_mesh_health_test_t::id_count (C++ 成员), 523
esp_ble_mesh_health_test_t::prev_test_id (C++ 成员), 523
esp_ble_mesh_health_test_t::registered_faults (C++ 成员), 523
esp_ble_mesh_health_test_t::test_ids (C++ 成员), 523
ESP_BLE_MESH_HEARTBEAT_FILTER_ACCEPTLIST (C 宏), 394
ESP_BLE_MESH_HEARTBEAT_FILTER_ADD (C 宏), 394
esp_ble_mesh_heartbeat_filter_info_t (C++ 类), 385
esp_ble_mesh_heartbeat_filter_info_t::hb_dst (C++ 成员), 385
esp_ble_mesh_heartbeat_filter_info_t::hb_src (C++ 成员), 385
ESP_BLE_MESH_HEARTBEAT_FILTER_REJECTLIST (C 宏), 394
ESP_BLE_MESH_HEARTBEAT_FILTER_REMOVE (C 宏), 394
ESP_BLE_MESH_HEARTBEAT_MESSAGE_RECV_EVT (C++ 枚举子), 416
ESP_BLE_MESH_HOUSING_OPENED_ERROR (C 宏), 529
ESP_BLE_MESH_HOUSING_OPENED_WARNING (C 宏),

529
esp_ble_mesh_init (C++ 函数), 419
esp_ble_mesh_input_action_t (C++ 类型), 411
ESP_BLE_MESH_INPUT_NO_CHANGE_ERROR (C 宏), 529
ESP_BLE_MESH_INPUT_NO_CHANGE_WARNING (C 宏), 529
ESP_BLE_MESH_INPUT_OOB (C++ 枚举子), 411
ESP_BLE_MESH_INPUT_TOO_HIGH_ERROR (C 宏), 529
ESP_BLE_MESH_INPUT_TOO_HIGH_WARNING (C 宏), 529
ESP_BLE_MESH_INPUT_TOO_LOW_ERROR (C 宏), 529
ESP_BLE_MESH_INPUT_TOO_LOW_WARNING (C 宏), 529
ESP_BLE_MESH_INTERNAL_BUS_ERROR (C 宏), 530
ESP_BLE_MESH_INTERNAL_BUS_WARNING (C 宏), 530
ESP_BLE_MESH_INVALID_NODE_INDEX (C 宏), 391
ESP_BLE_MESH_INVALID_SCENE_NUMBER (C 宏), 635
ESP_BLE_MESH_INVALID_SENSOR_PROPERTY_ID (C 宏), 604
ESP_BLE_MESH_INVALID_SENSOR_SETTING_PROPERTY_ID (C 宏), 604
ESP_BLE_MESH_INVALID_SETTINGS_IDX (C 宏), 389
esp_ble_mesh_is_model_subscribed_to_group (C++ 函数), 420
ESP_BLE_MESH_KEY_ANY (C 宏), 390
ESP_BLE_MESH_KEY_DEV (C 宏), 389
ESP_BLE_MESH_KEY_PRIMARY (C 宏), 389
ESP_BLE_MESH_KEY_UNUSED (C 宏), 389
esp_ble_mesh_last_msg_info_t (C++ 类), 387
esp_ble_mesh_last_msg_info_t::dst (C++ 成员), 388
esp_ble_mesh_last_msg_info_t::src (C++ 成员), 388
esp_ble_mesh_last_msg_info_t::tid (C++ 成员), 388
esp_ble_mesh_last_msg_info_t::timestamp (C++ 成员), 388
ESP_BLE_MESH_LC_FADE (C++ 枚举子), 587
ESP_BLE_MESH_LC_FADE_ON (C++ 枚举子), 587
ESP_BLE_MESH_LC_FADE_STANDBY_AUTO (C++ 枚举子), 587
ESP_BLE_MESH_LC_FADE_STANDBY_MANUAL (C++ 枚举子), 587
ESP_BLE_MESH_LC_OFF (C++ 枚举子), 587
ESP_BLE_MESH_LC_PROLONG (C++ 枚举子), 587
ESP_BLE_MESH_LC_RUN (C++ 枚举子), 587
ESP_BLE_MESH_LC_STANDBY (C++ 枚举子), 587
esp_ble_mesh_lc_state_t (C++ 类型), 587
esp_ble_mesh_light_client_cb_event_t (C++ 类型), 587
esp_ble_mesh_light_client_cb_param_t (C++ 类), 554
esp_ble_mesh_light_client_cb_param_t::error_code (C++ 成员), 554
esp_ble_mesh_light_client_cb_param_t::params (C++ 成员), 554
esp_ble_mesh_light_client_cb_param_t::status_cb (C++ 成员), 554
esp_ble_mesh_light_client_cb_t (C++ 类型), 586
ESP_BLE_MESH_LIGHT_CLIENT_EVT_MAX (C++ 枚举子), 587
esp_ble_mesh_light_client_get_state (C++ 函数), 531
ESP_BLE_MESH_LIGHT_CLIENT_GET_STATE_EVT (C++ 枚举子), 587
esp_ble_mesh_light_client_get_state_t (C++ 类型), 532
esp_ble_mesh_light_client_get_state_t::lc_property_get (C++ 成员), 532
ESP_BLE_MESH_LIGHT_CLIENT_PUBLISH_EVT (C++ 枚举子), 587
esp_ble_mesh_light_client_set_state (C++ 函数), 532
ESP_BLE_MESH_LIGHT_CLIENT_SET_STATE_EVT (C++ 枚举子), 587
esp_ble_mesh_light_client_set_state_t (C++ 类型), 532
esp_ble_mesh_light_client_set_state_t::ctl_default_set (C++ 成员), 533
esp_ble_mesh_light_client_set_state_t::ctl_set (C++ 成员), 533
esp_ble_mesh_light_client_set_state_t::ctl_temperature_ran (C++ 成员), 533
esp_ble_mesh_light_client_set_state_t::ctl_temperature_set

(C++ 成员), 533
esp_ble_mesh_light_client_set_state_t::hsl_default_set (C++ 成员), 533
esp_ble_mesh_light_client_set_state_t::hsl_hue_set (C++ 成员), 533
esp_ble_mesh_light_client_set_state_t::hsl_range_set (C++ 成员), 533
esp_ble_mesh_light_client_set_state_t::hsl_saturation_set (C++ 成员), 533
esp_ble_mesh_light_client_set_state_t::hsl_set (C++ 成员), 533
esp_ble_mesh_light_client_set_state_t::lc_light_onoff_set (C++ 成员), 534
esp_ble_mesh_light_client_set_state_t::lc_mode_set (C++ 成员), 534
esp_ble_mesh_light_client_set_state_t::lc_om_set (C++ 成员), 534
esp_ble_mesh_light_client_set_state_t::lc_property_set (C++ 成员), 534
esp_ble_mesh_light_client_set_state_t::lightness_default_set (C++ 成员), 533
esp_ble_mesh_light_client_set_state_t::lightness_linear_set (C++ 成员), 533
esp_ble_mesh_light_client_set_state_t::lightness_range_set (C++ 成员), 533
esp_ble_mesh_light_client_set_state_t::lightness_set (C++ 成员), 533
esp_ble_mesh_light_client_set_state_t::xyl_default_set (C++ 成员), 534
esp_ble_mesh_light_client_set_state_t::xyl_range_set (C++ 成员), 534
esp_ble_mesh_light_client_set_state_t::xyl_set (C++ 成员), 534
esp_ble_mesh_light_client_status_cb_t (C++ 类型), 534
esp_ble_mesh_light_client_status_cb_t::ctl_default_status (C++ 成员), 535
esp_ble_mesh_light_client_status_cb_t::ctl_status (C++ 成员), 535
esp_ble_mesh_light_client_status_cb_t::ctl_temperature_range_status (C++ 成员), 535
esp_ble_mesh_light_client_status_cb_t::ctl_temperature_status (C++ 成员), 535
esp_ble_mesh_light_client_status_cb_t::hsl_default_status (C++ 成员), 535
esp_ble_mesh_light_client_status_cb_t::hsl_hue_status (C++ 成员), 535
esp_ble_mesh_light_client_status_cb_t::hsl_range_status (C++ 成员), 535
esp_ble_mesh_light_client_status_cb_t::hsl_saturation_status (C++ 成员), 535
esp_ble_mesh_light_client_status_cb_t::hsl_status (C++ 成员), 535
esp_ble_mesh_light_client_status_cb_t::hsl_target_status (C++ 成员), 535
esp_ble_mesh_light_client_status_cb_t::lc_light_onoff_status (C++ 成员), 535
esp_ble_mesh_light_client_status_cb_t::lc_mode_status (C++ 成员), 535
esp_ble_mesh_light_client_status_cb_t::lc_om_status (C++ 成员), 535
esp_ble_mesh_light_client_status_cb_t::lc_property_status (C++ 成员), 536
esp_ble_mesh_light_client_status_cb_t::lightness_default_status (C++ 成员), 534
esp_ble_mesh_light_client_status_cb_t::lightness_last_status (C++ 成员), 534
esp_ble_mesh_light_client_status_cb_t::lightness_linear_status (C++ 成员), 534
esp_ble_mesh_light_client_status_cb_t::lightness_range_status (C++ 成员), 534
esp_ble_mesh_light_client_status_cb_t::lightness_status (C++ 成员), 534
esp_ble_mesh_light_client_status_cb_t::xyl_default_status (C++ 成员), 535
esp_ble_mesh_light_client_status_cb_t::xyl_range_status (C++ 成员), 535
esp_ble_mesh_light_client_status_cb_t::xyl_status (C++ 成员), 535
esp_ble_mesh_light_client_status_cb_t::xyl_target_status (C++ 成员), 535
ESP_BLE_MESH_LIGHT_CLIENT_TIMEOUT_EVT (C++ 枚举子), 587
esp_ble_mesh_light_control_t (C++ 类), 566

esp_ble_mesh_light_control_t::prop_state (C++ 成员), 566
esp_ble_mesh_light_control_t::state (C++ 成员), 566
esp_ble_mesh_light_control_t::state_machine (C++ 成员), 566
esp_ble_mesh_light_ctl_default_set_t (C++ 类), 541
esp_ble_mesh_light_ctl_default_set_t::delta_uv (C++ 成员), 542
esp_ble_mesh_light_ctl_default_set_t::lightness (C++ 成员), 542
esp_ble_mesh_light_ctl_default_set_t::temperature (C++ 成员), 542
esp_ble_mesh_light_ctl_default_status_cb_t (C++ 类), 549
esp_ble_mesh_light_ctl_default_status_cb_t::delta_uv (C++ 成员), 549
esp_ble_mesh_light_ctl_default_status_cb_t::lightness (C++ 成员), 549
esp_ble_mesh_light_ctl_default_status_cb_t::temperature (C++ 成员), 549
ESP_BLE_MESH_LIGHT_CTL_LIGHTNESS_STATE (C++ 枚举子), 418
esp_ble_mesh_light_ctl_set_t (C++ 类), 540
esp_ble_mesh_light_ctl_set_t::ctl_delta_uv (C++ 成员), 541
esp_ble_mesh_light_ctl_set_t::ctl_lightness (C++ 成员), 540
esp_ble_mesh_light_ctl_set_t::ctl_temperatrue (C++ 成员), 540
esp_ble_mesh_light_ctl_set_t::delay (C++ 成员), 541
esp_ble_mesh_light_ctl_set_t::op_en (C++ 成员), 540
esp_ble_mesh_light_ctl_set_t::tid (C++ 成员), 541
esp_ble_mesh_light_ctl_set_t::trans_time (C++ 成员), 541
esp_ble_mesh_light_ctl_setup_srv_t (C++ 类), 557
esp_ble_mesh_light_ctl_setup_srv_t::model (C++ 成员), 557
esp_ble_mesh_light_ctl_setup_srv_t::rsp_ctrl (C++ 成员), 557
esp_ble_mesh_light_ctl_setup_srv_t::state (C++ 成员), 557
esp_ble_mesh_light_ctl_srv_t (C++ 类), 556
esp_ble_mesh_light_ctl_srv_t::last (C++ 成员), 557
esp_ble_mesh_light_ctl_srv_t::model (C++ 成员), 557
esp_ble_mesh_light_ctl_srv_t::rsp_ctrl (C++ 成员), 557
esp_ble_mesh_light_ctl_srv_t::state (C++ 成员), 557
esp_ble_mesh_light_ctl_srv_t::transition (C++ 成员), 557
esp_ble_mesh_light_ctl_srv_t::tt_delta_delta_uv (C++ 成员), 557
esp_ble_mesh_light_ctl_srv_t::tt_delta_lightness (C++ 成员), 557
esp_ble_mesh_light_ctl_srv_t::tt_delta_temperature (C++ 成员), 557
esp_ble_mesh_light_ctl_state_t (C++ 类), 556
esp_ble_mesh_light_ctl_state_t::delta_uv (C++ 成员), 556
esp_ble_mesh_light_ctl_state_t::delta_uv_default (C++ 成员), 556
esp_ble_mesh_light_ctl_state_t::lightness (C++ 成员), 556
esp_ble_mesh_light_ctl_state_t::lightness_default (C++ 成员), 556
esp_ble_mesh_light_ctl_state_t::status_code (C++ 成员), 556
esp_ble_mesh_light_ctl_state_t::target_delta_uv (C++ 成员), 556
esp_ble_mesh_light_ctl_state_t::target_lightness (C++ 成员), 556
esp_ble_mesh_light_ctl_state_t::target_temperature (C++ 成员), 556
esp_ble_mesh_light_ctl_state_t::temperature (C++ 成员), 556
esp_ble_mesh_light_ctl_state_t::temperature_default

(C++ 成员), 556
esp_ble_mesh_light_ctl_state_t::temperature_range_max (C++ 成员), 556
esp_ble_mesh_light_ctl_state_t::temperature_range_min (C++ 成员), 556
esp_ble_mesh_light_ctl_status_cb_t (C++ 类), 548
esp_ble_mesh_light_ctl_status_cb_t::op_en (C++ 成员), 548
esp_ble_mesh_light_ctl_status_cb_t::present_ctl_lightness (C++ 成员), 548
esp_ble_mesh_light_ctl_status_cb_t::present_ctl_temperature (C++ 成员), 548
esp_ble_mesh_light_ctl_status_cb_t::remain_time (C++ 成员), 548
esp_ble_mesh_light_ctl_status_cb_t::target_ctl_lightness (C++ 成员), 548
esp_ble_mesh_light_ctl_status_cb_t::target_ctl_temperature (C++ 成员), 548
ESP_BLE_MESH_LIGHT_CTL_TEMP_DELTA_UV_STATE (C++ 枚举子), 418
esp_ble_mesh_light_ctl_temp_srv_t (C++ 类), 557
esp_ble_mesh_light_ctl_temp_srv_t::last (C++ 成员), 558
esp_ble_mesh_light_ctl_temp_srv_t::model (C++ 成员), 557
esp_ble_mesh_light_ctl_temp_srv_t::rsp_ctrl (C++ 成员), 557
esp_ble_mesh_light_ctl_temp_srv_t::state (C++ 成员), 558
esp_ble_mesh_light_ctl_temp_srv_t::transition (C++ 成员), 558
esp_ble_mesh_light_ctl_temp_srv_t::tt_delta_delta_uv (C++ 成员), 558
esp_ble_mesh_light_ctl_temp_srv_t::tt_delta_temperature (C++ 成员), 558
esp_ble_mesh_light_ctl_temperature_range_set_t (C++ 类), 541
esp_ble_mesh_light_ctl_temperature_range_set_t::range_max (C++ 成员), 541
esp_ble_mesh_light_ctl_temperature_range_set_t::range_min (C++ 成员), 541
esp_ble_mesh_light_ctl_temperature_range_status_cb_t (C++ 类), 548
esp_ble_mesh_light_ctl_temperature_range_status_cb_t::range_max (C++ 成员), 549
esp_ble_mesh_light_ctl_temperature_range_status_cb_t::range_min (C++ 成员), 549
esp_ble_mesh_light_ctl_temperature_range_status_cb_t::status (C++ 成员), 549
esp_ble_mesh_light_ctl_temperature_set_t (C++ 类), 541
esp_ble_mesh_light_ctl_temperature_set_t::ctl_delta_uv (C++ 成员), 541
esp_ble_mesh_light_ctl_temperature_set_t::ctl_temperature (C++ 成员), 541
esp_ble_mesh_light_ctl_temperature_set_t::delay (C++ 成员), 541
esp_ble_mesh_light_ctl_temperature_set_t::op_en (C++ 成员), 541
esp_ble_mesh_light_ctl_temperature_set_t::tid (C++ 成员), 541
esp_ble_mesh_light_ctl_temperature_set_t::trans_time (C++ 成员), 541
esp_ble_mesh_light_ctl_temperature_status_cb_t (C++ 类), 548
esp_ble_mesh_light_ctl_temperature_status_cb_t::op_en (C++ 成员), 548
esp_ble_mesh_light_ctl_temperature_status_cb_t::present_ct (C++ 成员), 548
esp_ble_mesh_light_ctl_temperature_status_cb_t::present_ct (C++ 成员), 548
esp_ble_mesh_light_ctl_temperature_status_cb_t::remain_tim (C++ 成员), 548
esp_ble_mesh_light_ctl_temperature_status_cb_t::target_ctl (C++ 成员), 548
esp_ble_mesh_light_ctl_temperature_status_cb_t::target_ctl (C++ 成员), 548
esp_ble_mesh_light_hsl_default_set_t (C++ 类), 543
esp_ble_mesh_light_hsl_default_set_t::hue (C++ 成员), 543
esp_ble_mesh_light_hsl_default_set_t::lightness

(C++ 成员), 543
esp_ble_mesh_light_hsl_default_set_t::saturation (C++ 成员), 543
esp_ble_mesh_light_hsl_default_status_cb_t (C++ 类), 551
esp_ble_mesh_light_hsl_default_status_cb_t::hue (C++ 成员), 551
esp_ble_mesh_light_hsl_default_status_cb_t::lightness (C++ 成员), 551
esp_ble_mesh_light_hsl_default_status_cb_t::saturation (C++ 成员), 551
esp_ble_mesh_light_hsl_hue_set_t (C++ 类), 542
esp_ble_mesh_light_hsl_hue_set_t::delay (C++ 成员), 543
esp_ble_mesh_light_hsl_hue_set_t::hue (C++ 成员), 542
esp_ble_mesh_light_hsl_hue_set_t::op_en (C++ 成员), 542
esp_ble_mesh_light_hsl_hue_set_t::tid (C++ 成员), 543
esp_ble_mesh_light_hsl_hue_set_t::trans_time (C++ 成员), 543
esp_ble_mesh_light_hsl_hue_srv_t (C++ 类), 560
esp_ble_mesh_light_hsl_hue_srv_t::last (C++ 成员), 560
esp_ble_mesh_light_hsl_hue_srv_t::model (C++ 成员), 560
esp_ble_mesh_light_hsl_hue_srv_t::rsp_ctrl (C++ 成员), 560
esp_ble_mesh_light_hsl_hue_srv_t::state (C++ 成员), 560
esp_ble_mesh_light_hsl_hue_srv_t::transition (C++ 成员), 560
esp_ble_mesh_light_hsl_hue_srv_t::tt_delta_hue (C++ 成员), 560
ESP_BLE_MESH_LIGHT_HSL_HUE_STATE (C++ 枚举子), 418
esp_ble_mesh_light_hsl_hue_status_cb_t (C++ 类), 550
esp_ble_mesh_light_hsl_hue_status_cb_t::op_en (C++ 成员), 550
esp_ble_mesh_light_hsl_hue_status_cb_t::present_hue (C++ 成员), 550
esp_ble_mesh_light_hsl_hue_status_cb_t::remain_time (C++ 成员), 550
esp_ble_mesh_light_hsl_hue_status_cb_t::target_hue (C++ 成员), 550
ESP_BLE_MESH_LIGHT_HSL_LIGHTNESS_STATE (C++ 枚举子), 418
esp_ble_mesh_light_hsl_range_set_t (C++ 类), 543
esp_ble_mesh_light_hsl_range_set_t::hue_range_max (C++ 成员), 544
esp_ble_mesh_light_hsl_range_set_t::hue_range_min (C++ 成员), 544
esp_ble_mesh_light_hsl_range_set_t::saturation_range_max (C++ 成员), 544
esp_ble_mesh_light_hsl_range_set_t::saturation_range_min (C++ 成员), 544
esp_ble_mesh_light_hsl_range_status_cb_t (C++ 类), 551
esp_ble_mesh_light_hsl_range_status_cb_t::hue_range_max (C++ 成员), 551
esp_ble_mesh_light_hsl_range_status_cb_t::hue_range_min (C++ 成员), 551
esp_ble_mesh_light_hsl_range_status_cb_t::saturation_range (C++ 成员), 551
esp_ble_mesh_light_hsl_range_status_cb_t::saturation_range (C++ 成员), 551
esp_ble_mesh_light_hsl_range_status_cb_t::status_code (C++ 成员), 551
esp_ble_mesh_light_hsl_sat_srv_t (C++ 类), 560
esp_ble_mesh_light_hsl_sat_srv_t::last (C++ 成员), 560
esp_ble_mesh_light_hsl_sat_srv_t::model (C++ 成员), 560
esp_ble_mesh_light_hsl_sat_srv_t::rsp_ctrl (C++ 成员), 560
esp_ble_mesh_light_hsl_sat_srv_t::state (C++ 成员), 560
esp_ble_mesh_light_hsl_sat_srv_t::transition

(C++ 成员), 561
esp_ble_mesh_light_hsl_sat_srv_t::tt_delta_saturation (C++ 成员), 561
esp_ble_mesh_light_hsl_saturation_set_t (C++ 类), 543
esp_ble_mesh_light_hsl_saturation_set_t::delay (C++ 成员), 543
esp_ble_mesh_light_hsl_saturation_set_t::op_en (C++ 成员), 543
esp_ble_mesh_light_hsl_saturation_set_t::saturation (C++ 成员), 543
esp_ble_mesh_light_hsl_saturation_set_t::tid (C++ 成员), 543
esp_ble_mesh_light_hsl_saturation_set_t::trans_time (C++ 成员), 543
ESP_BLE_MESH_LIGHT_HSL_SATURATION_STATE (C++ 枚举子), 418
esp_ble_mesh_light_hsl_saturation_status_cb_t (C++ 类), 550
esp_ble_mesh_light_hsl_saturation_status_cb_t::op_en (C++ 成员), 550
esp_ble_mesh_light_hsl_saturation_status_cb_t::present_saturation (C++ 成员), 550
esp_ble_mesh_light_hsl_saturation_status_cb_t::remain_time (C++ 成员), 551
esp_ble_mesh_light_hsl_saturation_status_cb_t::target_saturation (C++ 成员), 550
esp_ble_mesh_light_hsl_set_t (C++ 类), 542
esp_ble_mesh_light_hsl_set_t::delay (C++ 成员), 542
esp_ble_mesh_light_hsl_set_t::hsl_hue (C++ 成员), 542
esp_ble_mesh_light_hsl_set_t::hsl_lightness (C++ 成员), 542
esp_ble_mesh_light_hsl_set_t::hsl_saturation (C++ 成员), 542
esp_ble_mesh_light_hsl_set_t::op_en (C++ 成员), 542
esp_ble_mesh_light_hsl_set_t::tid (C++ 成员), 542
esp_ble_mesh_light_hsl_set_t::trans_time (C++ 成员), 542
esp_ble_mesh_light_hsl_setup_srv_t (C++ 类), 559
esp_ble_mesh_light_hsl_setup_srv_t::model (C++ 成员), 560
esp_ble_mesh_light_hsl_setup_srv_t::rsp_ctrl (C++ 成员), 560
esp_ble_mesh_light_hsl_setup_srv_t::state (C++ 成员), 560
esp_ble_mesh_light_hsl_srv_t (C++ 类), 559
esp_ble_mesh_light_hsl_srv_t::last (C++ 成员), 559
esp_ble_mesh_light_hsl_srv_t::model (C++ 成员), 559
esp_ble_mesh_light_hsl_srv_t::rsp_ctrl (C++ 成员), 559
esp_ble_mesh_light_hsl_srv_t::state (C++ 成员), 559
esp_ble_mesh_light_hsl_srv_t::transition (C++ 成员), 559
esp_ble_mesh_light_hsl_srv_t::tt_delta_hue (C++ 成员), 559
esp_ble_mesh_light_hsl_srv_t::tt_delta_lightness (C++ 成员), 559
esp_ble_mesh_light_hsl_srv_t::tt_delta_saturation (C++ 成员), 559
esp_ble_mesh_light_hsl_state_t (C++ 类), 558
esp_ble_mesh_light_hsl_state_t::hue (C++ 成员), 558
esp_ble_mesh_light_hsl_state_t::hue_default (C++ 成员), 558
esp_ble_mesh_light_hsl_state_t::hue_range_max (C++ 成员), 559
esp_ble_mesh_light_hsl_state_t::hue_range_min (C++ 成员), 559
esp_ble_mesh_light_hsl_state_t::lightness (C++ 成员), 558
esp_ble_mesh_light_hsl_state_t::lightness_default (C++ 成员), 558
esp_ble_mesh_light_hsl_state_t::saturation (C++ 成员), 558
esp_ble_mesh_light_hsl_state_t::saturation_default (C++ 成员), 558

esp_ble_mesh_light_hsl_state_t::saturation_range_max (C++ 成员), 559
esp_ble_mesh_light_hsl_state_t::saturation_range_min (C++ 成员), 559
esp_ble_mesh_light_hsl_state_t::status_code (C++ 成员), 558
esp_ble_mesh_light_hsl_state_t::target_hue (C++ 成员), 558
esp_ble_mesh_light_hsl_state_t::target_lightness (C++ 成员), 558
esp_ble_mesh_light_hsl_state_t::target_saturation (C++ 成员), 558
esp_ble_mesh_light_hsl_status_cb_t (C++ 类), 549
esp_ble_mesh_light_hsl_status_cb_t::hsl_hue (C++ 成员), 549
esp_ble_mesh_light_hsl_status_cb_t::hsl_lightness (C++ 成员), 549
esp_ble_mesh_light_hsl_status_cb_t::hsl_saturation (C++ 成员), 549
esp_ble_mesh_light_hsl_status_cb_t::op_en (C++ 成员), 549
esp_ble_mesh_light_hsl_status_cb_t::remain_time (C++ 成员), 549
esp_ble_mesh_light_hsl_target_status_cb_t (C++ 类), 549
esp_ble_mesh_light_hsl_target_status_cb_t::hsl_hue_target (C++ 成员), 550
esp_ble_mesh_light_hsl_target_status_cb_t::hsl_lightness_target (C++ 成员), 550
esp_ble_mesh_light_hsl_target_status_cb_t::hsl_saturation_target (C++ 成员), 550
esp_ble_mesh_light_hsl_target_status_cb_t::op_en (C++ 成员), 550
esp_ble_mesh_light_hsl_target_status_cb_t::remain_time (C++ 成员), 550
esp_ble_mesh_light_lc_light_onoff_set_t (C++ 类), 545
esp_ble_mesh_light_lc_light_onoff_set_t::delay (C++ 成员), 546
esp_ble_mesh_light_lc_light_onoff_set_t::light_onoff (C++ 成员), 545
esp_ble_mesh_light_lc_light_onoff_set_t::op_en (C++ 成员), 545
esp_ble_mesh_light_lc_light_onoff_set_t::tid (C++ 成员), 546
esp_ble_mesh_light_lc_light_onoff_set_t::trans_time (C++ 成员), 546
ESP_BLE_MESH_LIGHT_LC_LIGHT_ONOFF_STATE (C++ 枚举子), 418
esp_ble_mesh_light_lc_light_onoff_status_cb_t (C++ 类), 553
esp_ble_mesh_light_lc_light_onoff_status_cb_t::op_en (C++ 成员), 553
esp_ble_mesh_light_lc_light_onoff_status_cb_t::present_light (C++ 成员), 553
esp_ble_mesh_light_lc_light_onoff_status_cb_t::remain_time (C++ 成员), 553
esp_ble_mesh_light_lc_light_onoff_status_cb_t::target_light (C++ 成员), 553
esp_ble_mesh_light_lc_mode_set_t (C++ 类), 545
esp_ble_mesh_light_lc_mode_set_t::mode (C++ 成员), 545
esp_ble_mesh_light_lc_mode_status_cb_t (C++ 类), 553
esp_ble_mesh_light_lc_mode_status_cb_t::mode (C++ 成员), 553
esp_ble_mesh_light_lc_om_set_t (C++ 类), 545
esp_ble_mesh_light_lc_om_set_t::mode (C++ 成员), 545
esp_ble_mesh_light_lc_om_set_t::target (C++ 成员), 545
esp_ble_mesh_light_lc_om_status_cb_t (C++ 类), 553
esp_ble_mesh_light_lc_om_status_cb_t::target (C++ 成员), 553
esp_ble_mesh_light_lc_om_status_cb_t::mode (C++ 成员), 553
esp_ble_mesh_light_lc_property_get_t (C++ 类), 546
esp_ble_mesh_light_lc_property_get_t::property_id (C++ 成员), 546
esp_ble_mesh_light_lc_property_set_t (C++ 类), 546
esp_ble_mesh_light_lc_property_set_t::property_id (C++ 成员), 546
esp_ble_mesh_light_lc_property_set_t::property_value

(C++ 成员), 546
esp_ble_mesh_light_lc_property_state_t (C++ 类), 563
esp_ble_mesh_light_lc_property_state_t::ambient_luxlevel (C++ 成员), 564
esp_ble_mesh_light_lc_property_state_t::ambient_luxlevel_prolong (C++ 成员), 564
esp_ble_mesh_light_lc_property_state_t::ambient_luxlevel_status (C++ 成员), 565
esp_ble_mesh_light_lc_property_state_t::lightness_onoff (C++ 成员), 564
esp_ble_mesh_light_lc_property_state_t::lightness_prolong (C++ 成员), 564
esp_ble_mesh_light_lc_property_state_t::lightness_standby (C++ 成员), 564
esp_ble_mesh_light_lc_property_state_t::regulator_accuracy (C++ 成员), 565
esp_ble_mesh_light_lc_property_state_t::regulator_kid (C++ 成员), 565
esp_ble_mesh_light_lc_property_state_t::regulator_kiu (C++ 成员), 565
esp_ble_mesh_light_lc_property_state_t::regulator_kpd (C++ 成员), 565
esp_ble_mesh_light_lc_property_state_t::regulator_kpu (C++ 成员), 565
esp_ble_mesh_light_lc_property_state_t::set_occupancy_to (C++ 成员), 565
esp_ble_mesh_light_lc_property_state_t::time_fade (C++ 成员), 564
esp_ble_mesh_light_lc_property_state_t::time_fade_on (C++ 成员), 564
esp_ble_mesh_light_lc_property_state_t::time_fade_standby_auto (C++ 成员), 564
esp_ble_mesh_light_lc_property_state_t::time_fade_standby_manual (C++ 成员), 564
esp_ble_mesh_light_lc_property_state_t::time_occupancy_delay (C++ 成员), 563
esp_ble_mesh_light_lc_property_state_t::time_prolong (C++ 成员), 564
esp_ble_mesh_light_lc_property_state_t::time_run_on (C++ 成员), 564
esp_ble_mesh_light_lc_property_status_cb_t (C++ 类), 554
esp_ble_mesh_light_lc_property_status_cb_t::property_id (C++ 成员), 554
esp_ble_mesh_light_lc_property_status_cb_t::property_value (C++ 成员), 554
esp_ble_mesh_light_lc_setup_srv_t (C++ 类), 567
esp_ble_mesh_light_lc_setup_srv_t::lc (C++ 成员), 567
esp_ble_mesh_light_lc_setup_srv_t::model (C++ 成员), 567
esp_ble_mesh_light_lc_setup_srv_t::rsp_ctrl (C++ 成员), 567
esp_ble_mesh_light_lc_srv_t (C++ 类), 566
esp_ble_mesh_light_lc_srv_t::last (C++ 成员), 567
esp_ble_mesh_light_lc_srv_t::lc (C++ 成员), 567
esp_ble_mesh_light_lc_srv_t::model (C++ 成员), 566
esp_ble_mesh_light_lc_srv_t::rsp_ctrl (C++ 成员), 566
esp_ble_mesh_light_lc_srv_t::transition (C++ 成员), 567
esp_ble_mesh_light_lc_state_machine_t (C++ 类), 567
esp_ble_mesh_light_lc_state_machine_t::delay (C++ 成员), 566
esp_ble_mesh_light_lc_state_machine_t::fade (C++ 成员), 566
esp_ble_mesh_light_lc_state_machine_t::fade_on (C++ 成员), 566
esp_ble_mesh_light_lc_state_machine_t::fade_standby_auto (C++ 成员), 566
esp_ble_mesh_light_lc_state_machine_t::fade_standby_manual (C++ 成员), 566
esp_ble_mesh_light_lc_state_machine_t::state (C++ 成员), 566
esp_ble_mesh_light_lc_state_machine_t::timer (C++ 成员), 566
esp_ble_mesh_light_lc_state_machine_t::trans_time (C++ 成员), 566
esp_ble_mesh_light_lc_state_t (C++ 类), 562
esp_ble_mesh_light_lc_state_t::ambient_luxlevel

(C++ 成员), 563
esp_ble_mesh_light_lc_state_t::light_onoff (C++ 成员), 563
esp_ble_mesh_light_lc_state_t::linear_output (C++ 成员), 563
esp_ble_mesh_light_lc_state_t::mode (C++ 成员), 563
esp_ble_mesh_light_lc_state_t::occupancy (C++ 成员), 563
esp_ble_mesh_light_lc_state_t::occupancy_mode (C++ 成员), 563
esp_ble_mesh_light_lc_state_t::target_light_onoff (C++ 成员), 563
ESP_BLE_MESH_LIGHT_LIGHTNESS_ACTUAL_STATE (C++ 枚举子), 418
esp_ble_mesh_light_lightness_default_set_t (C++ 类), 540
esp_ble_mesh_light_lightness_default_set_t::lightness (C++ 成员), 540
esp_ble_mesh_light_lightness_default_status_cb_t (C++ 类), 547
esp_ble_mesh_light_lightness_default_status_cb_t::lightness (C++ 成员), 547
esp_ble_mesh_light_lightness_last_status_cb_t (C++ 类), 547
esp_ble_mesh_light_lightness_last_status_cb_t::lightness (C++ 成员), 547
esp_ble_mesh_light_lightness_linear_set_t (C++ 类), 539
esp_ble_mesh_light_lightness_linear_set_t::delay (C++ 成员), 540
esp_ble_mesh_light_lightness_linear_set_t::lightness (C++ 成员), 540
esp_ble_mesh_light_lightness_linear_set_t::op_en (C++ 成员), 540
esp_ble_mesh_light_lightness_linear_set_t::tid (C++ 成员), 540
esp_ble_mesh_light_lightness_linear_set_t::trans_time (C++ 成员), 540
ESP_BLE_MESH_LIGHT_LIGHTNESS_LINEAR_STATE (C++ 枚举子), 418
esp_ble_mesh_light_lightness_linear_status_cb_t (C++ 类), 547
esp_ble_mesh_light_lightness_linear_status_cb_t::op_en (C++ 成员), 547
esp_ble_mesh_light_lightness_linear_status_cb_t::present_l (C++ 成员), 547
esp_ble_mesh_light_lightness_linear_status_cb_t::remain_ti (C++ 成员), 547
esp_ble_mesh_light_lightness_linear_status_cb_t::target_li (C++ 成员), 547
esp_ble_mesh_light_lightness_range_set_t (C++ 类), 540
esp_ble_mesh_light_lightness_range_set_t::range_max (C++ 成员), 540
esp_ble_mesh_light_lightness_range_set_t::range_min (C++ 成员), 540
esp_ble_mesh_light_lightness_range_status_cb_t (C++ 类), 547
esp_ble_mesh_light_lightness_range_status_cb_t::range_max (C++ 成员), 547
esp_ble_mesh_light_lightness_range_status_cb_t::range_min (C++ 成员), 547
esp_ble_mesh_light_lightness_range_status_cb_t::status_cod (C++ 成员), 547
esp_ble_mesh_light_lightness_set_t (C++ 类), 539
esp_ble_mesh_light_lightness_set_t::delay (C++ 成员), 539
esp_ble_mesh_light_lightness_set_t::lightness (C++ 成员), 539
esp_ble_mesh_light_lightness_set_t::op_en (C++ 成员), 539
esp_ble_mesh_light_lightness_set_t::tid (C++ 成员), 539
esp_ble_mesh_light_lightness_set_t::trans_time (C++ 成员), 539
esp_ble_mesh_light_lightness_setup_srv_t (C++ 类), 555
esp_ble_mesh_light_lightness_setup_srv_t::model (C++ 成员), 555
esp_ble_mesh_light_lightness_setup_srv_t::rsp_ctrl (C++ 成员), 555
esp_ble_mesh_light_lightness_setup_srv_t::state

(C++ 成员), 556
esp_ble_mesh_light_lightness_srv_t (C++ 类), 555
esp_ble_mesh_light_lightness_srv_t::actual_transmitter (C++ 成员), 555
esp_ble_mesh_light_lightness_srv_t::last (C++ 成员), 555
esp_ble_mesh_light_lightness_srv_t::linear_transmitter (C++ 成员), 555
esp_ble_mesh_light_lightness_srv_t::model (C++ 成员), 555
esp_ble_mesh_light_lightness_srv_t::rsp_ctrl (C++ 成员), 555
esp_ble_mesh_light_lightness_srv_t::state (C++ 成员), 555
esp_ble_mesh_light_lightness_srv_t::tt_delta_lightness_actual (C++ 成员), 555
esp_ble_mesh_light_lightness_srv_t::tt_delta_lightness_linear (C++ 成员), 555
esp_ble_mesh_light_lightness_state_t (C++ 类), 554
esp_ble_mesh_light_lightness_state_t::lightness_actual (C++ 成员), 554
esp_ble_mesh_light_lightness_state_t::lightness_default (C++ 成员), 554
esp_ble_mesh_light_lightness_state_t::lightness_last (C++ 成员), 554
esp_ble_mesh_light_lightness_state_t::lightness_linear (C++ 成员), 554
esp_ble_mesh_light_lightness_state_t::lightness_range (C++ 成员), 555
esp_ble_mesh_light_lightness_state_t::lightness_range_min (C++ 成员), 555
esp_ble_mesh_light_lightness_state_t::status_code (C++ 成员), 555
esp_ble_mesh_light_lightness_state_t::target_lightness_actual (C++ 成员), 554
esp_ble_mesh_light_lightness_state_t::target_lightness_linear (C++ 成员), 554
esp_ble_mesh_light_lightness_status_cb_t (C++ 类), 546
esp_ble_mesh_light_lightness_status_cb_t::op_en (C++ 成员), 546
esp_ble_mesh_light_lightness_status_cb_t::present_lightness (C++ 成员), 546
esp_ble_mesh_light_lightness_status_cb_t::remain_time (C++ 成员), 546
esp_ble_mesh_light_lightness_status_cb_t::target_lightness (C++ 成员), 546
esp_ble_mesh_light_message_opcode_t (C++ 类型), 410
esp_ble_mesh_light_xyl_default_set_t (C++ 类), 544
esp_ble_mesh_light_xyl_default_set_t::lightness (C++ 成员), 544
esp_ble_mesh_light_xyl_default_set_t::xyl_x (C++ 成员), 544
esp_ble_mesh_light_xyl_default_set_t::xyl_y (C++ 成员), 545
esp_ble_mesh_light_xyl_default_status_cb_t (C++ 类), 552
esp_ble_mesh_light_xyl_default_status_cb_t::lightness (C++ 成员), 552
esp_ble_mesh_light_xyl_default_status_cb_t::xyl_x (C++ 成员), 552
esp_ble_mesh_light_xyl_default_status_cb_t::xyl_y (C++ 成员), 552
ESP_BLE_MESH_LIGHT_XYL_LIGHTNESS_STATE (C++ 枚举子), 418
esp_ble_mesh_light_xyl_range_set_t (C++ 类), 545
esp_ble_mesh_light_xyl_range_set_t::xyl_x_range_max (C++ 成员), 545
esp_ble_mesh_light_xyl_range_set_t::xyl_x_range_min (C++ 成员), 545
esp_ble_mesh_light_xyl_range_set_t::xyl_y_range_max (C++ 成员), 545
esp_ble_mesh_light_xyl_range_set_t::xyl_y_range_min (C++ 成员), 545
esp_ble_mesh_light_xyl_range_status_cb_t (C++ 类), 552
esp_ble_mesh_light_xyl_range_status_cb_t::status_code (C++ 成员), 553
esp_ble_mesh_light_xyl_range_status_cb_t::xyl_x_range_max

(C++ 成员), 553
esp_ble_mesh_light_xyl_range_status_cb_t::xyl_range_max (C++ 成员), 553
esp_ble_mesh_light_xyl_range_status_cb_t::xyl_range_min (C++ 成员), 553
esp_ble_mesh_light_xyl_range_status_cb_t::xyl_status_code (C++ 成员), 553
esp_ble_mesh_light_xyl_set_t (C++ 类), 544
esp_ble_mesh_light_xyl_set_t::delay (C++ 成员), 544
esp_ble_mesh_light_xyl_set_t::op_en (C++ 成员), 544
esp_ble_mesh_light_xyl_set_t::tid (C++ 成员), 544
esp_ble_mesh_light_xyl_set_t::trans_time (C++ 成员), 544
esp_ble_mesh_light_xyl_set_t::xyl_lightness (C++ 成员), 544
esp_ble_mesh_light_xyl_set_t::xyl_x (C++ 成员), 544
esp_ble_mesh_light_xyl_set_t::xyl_y (C++ 成员), 544
esp_ble_mesh_light_xyl_setup_srv_t (C++ 类), 562
esp_ble_mesh_light_xyl_setup_srv_t::model (C++ 成员), 562
esp_ble_mesh_light_xyl_setup_srv_t::rsp_ctrl (C++ 成员), 562
esp_ble_mesh_light_xyl_setup_srv_t::state (C++ 成员), 562
esp_ble_mesh_light_xyl_srv_t (C++ 类), 562
esp_ble_mesh_light_xyl_srv_t::last (C++ 成员), 562
esp_ble_mesh_light_xyl_srv_t::model (C++ 成员), 562
esp_ble_mesh_light_xyl_srv_t::rsp_ctrl (C++ 成员), 562
esp_ble_mesh_light_xyl_srv_t::state (C++ 成员), 562
esp_ble_mesh_light_xyl_srv_t::transition (C++ 成员), 562
esp_ble_mesh_light_xyl_srv_t::tt_delta_lightness (C++ 成员), 562
esp_ble_mesh_light_xyl_srv_t::tt_delta_x (C++ 成员), 562
esp_ble_mesh_light_xyl_srv_t::tt_delta_y (C++ 成员), 562
esp_ble_mesh_light_xyl_state_t (C++ 类), 561
esp_ble_mesh_light_xyl_state_t::lightness (C++ 成员), 561
esp_ble_mesh_light_xyl_state_t::lightness_default (C++ 成员), 561
esp_ble_mesh_light_xyl_state_t::status_code (C++ 成员), 561
esp_ble_mesh_light_xyl_state_t::target_lightness (C++ 成员), 561
esp_ble_mesh_light_xyl_state_t::target_x (C++ 成员), 561
esp_ble_mesh_light_xyl_state_t::target_y (C++ 成员), 561
esp_ble_mesh_light_xyl_state_t::x (C++ 成员), 561
esp_ble_mesh_light_xyl_state_t::x_default (C++ 成员), 561
esp_ble_mesh_light_xyl_state_t::x_range_max (C++ 成员), 561
esp_ble_mesh_light_xyl_state_t::x_range_min (C++ 成员), 561
esp_ble_mesh_light_xyl_state_t::y (C++ 成员), 561
esp_ble_mesh_light_xyl_state_t::y_default (C++ 成员), 561
esp_ble_mesh_light_xyl_state_t::y_range_max (C++ 成员), 562
esp_ble_mesh_light_xyl_state_t::y_range_min (C++ 成员), 561
esp_ble_mesh_light_xyl_status_cb_t (C++ 类), 551
esp_ble_mesh_light_xyl_status_cb_t::op_en (C++ 成员), 551
esp_ble_mesh_light_xyl_status_cb_t::remain_time (C++ 成员), 552
esp_ble_mesh_light_xyl_status_cb_t::xyl_lightness (C++ 成员), 551

esp_ble_mesh_light_xyl_status_cb_t::xyl_x (C++ 成员), 552
esp_ble_mesh_light_xyl_status_cb_t::xyl_y (C++ 成员), 552
esp_ble_mesh_light_xyl_target_status_cb_t (C++ 类), 552
esp_ble_mesh_light_xyl_target_status_cb_t::op_en (C++ 成员), 552
esp_ble_mesh_light_xyl_target_status_cb_t::remain_time (C++ 成员), 552
esp_ble_mesh_light_xyl_target_status_cb_t::target_xyl_height (C++ 成员), 552
esp_ble_mesh_light_xyl_target_status_cb_t::target_xyl_x (C++ 成员), 552
esp_ble_mesh_light_xyl_target_status_cb_t::target_xyl_y (C++ 成员), 552
esp_ble_mesh_lighting_server_cb_event_t (C++ 类型), 587
esp_ble_mesh_lighting_server_cb_param_t (C++ 类), 580
esp_ble_mesh_lighting_server_cb_param_t::ctx (C++ 成员), 580
esp_ble_mesh_lighting_server_cb_param_t::model (C++ 成员), 580
esp_ble_mesh_lighting_server_cb_param_t::value (C++ 成员), 580
esp_ble_mesh_lighting_server_cb_t (C++ 类型), 586
esp_ble_mesh_lighting_server_cb_value_t (C++ 类型), 539
esp_ble_mesh_lighting_server_cb_value_t::get (C++ 成员), 539
esp_ble_mesh_lighting_server_cb_value_t::set (C++ 成员), 539
esp_ble_mesh_lighting_server_cb_value_t::state_change (C++ 成员), 539
esp_ble_mesh_lighting_server_cb_value_t::status (C++ 成员), 539
ESP_BLE_MESH_LIGHTING_SERVER_EVT_MAX (C++ 枚举子), 588
ESP_BLE_MESH_LIGHTING_SERVER_RECV_GET_MSG_EVT (C++ 枚举子), 588
esp_ble_mesh_lighting_server_recv_get_msg_t (C++ 类型), 537
esp_ble_mesh_lighting_server_recv_get_msg_t::lc_property (C++ 成员), 537
ESP_BLE_MESH_LIGHTING_SERVER_RECV_SET_MSG_EVT (C++ 枚举子), 588
esp_ble_mesh_lighting_server_recv_set_msg_t (C++ 类型), 537
esp_ble_mesh_lighting_server_recv_set_msg_t::ctl (C++ 成员), 537
esp_ble_mesh_lighting_server_recv_set_msg_t::ctl_default (C++ 成员), 538
esp_ble_mesh_lighting_server_recv_set_msg_t::ctl_temp (C++ 成员), 538
esp_ble_mesh_lighting_server_recv_set_msg_t::ctl_temp_range (C++ 成员), 538
esp_ble_mesh_lighting_server_recv_set_msg_t::hsl (C++ 成员), 538
esp_ble_mesh_lighting_server_recv_set_msg_t::hsl_default (C++ 成员), 538
esp_ble_mesh_lighting_server_recv_set_msg_t::hsl_hue (C++ 成员), 538
esp_ble_mesh_lighting_server_recv_set_msg_t::hsl_range (C++ 成员), 538
esp_ble_mesh_lighting_server_recv_set_msg_t::hsl_saturation (C++ 成员), 538
esp_ble_mesh_lighting_server_recv_set_msg_t::lc_light_onoff (C++ 成员), 538
esp_ble_mesh_lighting_server_recv_set_msg_t::lc_mode (C++ 成员), 538
esp_ble_mesh_lighting_server_recv_set_msg_t::lc_om (C++ 成员), 538
esp_ble_mesh_lighting_server_recv_set_msg_t::lc_property (C++ 成员), 538
esp_ble_mesh_lighting_server_recv_set_msg_t::lightness (C++ 成员), 537
esp_ble_mesh_lighting_server_recv_set_msg_t::lightness_default (C++ 成员), 537
esp_ble_mesh_lighting_server_recv_set_msg_t::lightness_linear (C++ 成员), 537
esp_ble_mesh_lighting_server_recv_set_msg_t::lightness_range (C++ 成员), 537

esp_ble_mesh_lighting_server_recv_set_msg_t::xyl (C++ 成员), 538
esp_ble_mesh_lighting_server_recv_set_msg_t::xyl_delta (C++ 成员), 538
esp_ble_mesh_lighting_server_recv_set_msg_t::xyl_range (C++ 成员), 538
ESP_BLE_MESH_LIGHTING_SERVER_RECV_STATUS_MSG_EVT (C++ 枚举子), 588
esp_ble_mesh_lighting_server_recv_status_msg_t (C++ 类型), 538
esp_ble_mesh_lighting_server_recv_status_msg_t::model (C++ 成员), 539
ESP_BLE_MESH_LIGHTING_SERVER_STATE_CHANGE_EVT (C++ 枚举子), 587
esp_ble_mesh_lighting_server_state_change_t (C++ 类型), 536
esp_ble_mesh_lighting_server_state_change_t::ctl_delta_uv (C++ 成员), 536
esp_ble_mesh_lighting_server_state_change_t::ctl_set (C++ 成员), 536
esp_ble_mesh_lighting_server_state_change_t::ctl_temp_range_set (C++ 成员), 536
esp_ble_mesh_lighting_server_state_change_t::hsl_default_set (C++ 成员), 536
esp_ble_mesh_lighting_server_state_change_t::hsl_hue_set (C++ 成员), 536
esp_ble_mesh_lighting_server_state_change_t::hsl_range_set (C++ 成员), 536
esp_ble_mesh_lighting_server_state_change_t::hsl_saturation_set (C++ 成员), 536
esp_ble_mesh_lighting_server_state_change_t::hsl_set (C++ 成员), 536
esp_ble_mesh_lighting_server_state_change_t::light_ctl_set (C++ 成员), 537
esp_ble_mesh_lighting_server_state_change_t::light_hsl_set (C++ 成员), 537
esp_ble_mesh_lighting_server_state_change_t::lightness_set (C++ 成员), 537
esp_ble_mesh_lighting_server_state_change_t::lightness_def (C++ 成员), 536
esp_ble_mesh_lighting_server_state_change_t::lightness_lin (C++ 成员), 536
esp_ble_mesh_lighting_server_state_change_t::lightness_ran (C++ 成员), 536
esp_ble_mesh_lighting_server_state_change_t::lightness_set (C++ 成员), 536
esp_ble_mesh_lighting_server_state_change_t::sensor_status (C++ 成员), 537
esp_ble_mesh_lighting_server_state_change_t::xyl_default_s (C++ 成员), 537
esp_ble_mesh_lighting_server_state_change_t::xyl_range_set (C++ 成员), 537
esp_ble_mesh_lighting_server_state_change_t::xyl_set (C++ 成员), 536
esp_ble_mesh_lpn_disable (C++ 函数), 424
ESP_BLE_MESH_LPN_DISABLE_COMP_EVT (C++ 枚举子), 416
esp_ble_mesh_lpn_enable (C++ 函数), 424
ESP_BLE_MESH_LPN_ENABLE_COMP_EVT (C++ 枚举子), 416
ESP_BLE_MESH_LPN_FRIENDSHIP_ESTABLISH_EVT (C++ 枚举子), 416
ESP_BLE_MESH_LPN_FRIENDSHIP_TERMINATE_EVT (C++ 枚举子), 416
esp_ble_mesh_lpn_poll (C++ 函数), 424
ESP_BLE_MESH_LPN_POLL_COMP_EVT (C++ 枚举子), 416
ESP_BLE_MESH_MECHANISM_JAMMED_ERROR (C 宏), 530
ESP_BLE_MESH_MECHANISM_JAMMED_WARNING (C 宏), 530
ESP_BLE_MESH_MEMORY_ERROR (C 宏), 529
ESP_BLE_MESH_MEMORY_WARNING (C 宏), 529
ESP_BLE_MESH_MIC_LONG (C 宏), 389
ESP_BLE_MESH_MIC_SHORT (C 宏), 389
esp_ble_mesh_model (C++ 类), 379
esp_ble_mesh_model::cb (C++ 成员), 380
esp_ble_mesh_model::element (C++ 成员), 380
esp_ble_mesh_model::element_idx (C++ 成员), 380

esp_ble_mesh_model::flags (C++ 成员), 380
esp_ble_mesh_model::groups (C++ 成员), 380
esp_ble_mesh_model::keys (C++ 成员), 380
esp_ble_mesh_model::model_idx (C++ 成员), 380
esp_ble_mesh_model::op (C++ 成员), 380
esp_ble_mesh_model::pub (C++ 成员), 380
esp_ble_mesh_model::user_data (C++ 成员), 380
esp_ble_mesh_model::[anonymous] (C++ 成员), 380
esp_ble_mesh_model_cb_event_t (C++ 类型), 418
esp_ble_mesh_model_cb_param_t (C++ 类型), 374
esp_ble_mesh_model_cb_param_t::ble_mesh_client_model_send_comp_param (C++ 类), 375
esp_ble_mesh_model_cb_param_t::ble_mesh_client_model_send_comp_param::ctx (C++ 成员), 375
esp_ble_mesh_model_cb_param_t::ble_mesh_client_model_send_comp_param::model (C++ 成员), 375
esp_ble_mesh_model_cb_param_t::ble_mesh_client_model_send_comp_param::opcode (C++ 成员), 375
esp_ble_mesh_model_cb_param_t::ble_mesh_mod_recv_publish_msg_param (C++ 类), 375
esp_ble_mesh_model_cb_param_t::ble_mesh_mod_recv_publish_msg_param::ctx (C++ 成员), 375
esp_ble_mesh_model_cb_param_t::ble_mesh_mod_recv_publish_msg_param::length (C++ 成员), 375
esp_ble_mesh_model_cb_param_t::ble_mesh_mod_recv_publish_msg_param::model (C++ 成员), 375
esp_ble_mesh_model_cb_param_t::ble_mesh_mod_recv_publish_msg_param::msg (C++ 成员), 375
esp_ble_mesh_model_cb_param_t::ble_mesh_mod_recv_publish_msg_param::opcode (C++ 成员), 375
esp_ble_mesh_model_cb_param_t::ble_mesh_model_operation_comp_param (C++ 类), 375
esp_ble_mesh_model_cb_param_t::ble_mesh_model_operation_comp_param::ctx (C++ 成员), 376
esp_ble_mesh_model_cb_param_t::ble_mesh_model_operation_comp_param::length (C++ 成员), 376
esp_ble_mesh_model_cb_param_t::ble_mesh_model_operation_comp_param::model (C++ 成员), 376
esp_ble_mesh_model_cb_param_t::ble_mesh_model_operation_comp_param::msg (C++ 成员), 376
esp_ble_mesh_model_cb_param_t::ble_mesh_model_operation_comp_param::opcode (C++ 成员), 376
esp_ble_mesh_model_cb_param_t::ble_mesh_model_publish_comp_param (C++ 类), 376
esp_ble_mesh_model_cb_param_t::ble_mesh_model_publish_comp_param::model (C++ 成员), 376
esp_ble_mesh_model_cb_param_t::ble_mesh_model_publish_comp_param::status (C++ 成员), 376
esp_ble_mesh_model_cb_param_t::ble_mesh_model_publish_update_param (C++ 类), 376
esp_ble_mesh_model_cb_param_t::ble_mesh_model_publish_update_param::model (C++ 成员), 376
esp_ble_mesh_model_cb_param_t::ble_mesh_model_send_comp_param (C++ 类), 376
esp_ble_mesh_model_cb_param_t::ble_mesh_model_send_comp_param::ctx (C++ 成员), 377
esp_ble_mesh_model_cb_param_t::ble_mesh_model_send_comp_param::model (C++ 成员), 376
esp_ble_mesh_model_cb_param_t::ble_mesh_model_send_comp_param::opcode (C++ 成员), 377
esp_ble_mesh_model_cb_param_t::ble_mesh_model_send_comp_param::state (C++ 成员), 376
esp_ble_mesh_model_cb_param_t::ble_mesh_server_model_update_state_comp_param (C++ 类), 377
esp_ble_mesh_model_cb_param_t::ble_mesh_server_model_update_state_comp_param::length (C++ 成员), 377
esp_ble_mesh_model_cb_param_t::ble_mesh_server_model_update_state_comp_param::model (C++ 成员), 377
esp_ble_mesh_model_cb_param_t::ble_mesh_server_model_update_state_comp_param::msg (C++ 成员), 377
esp_ble_mesh_model_cb_param_t::ble_mesh_server_model_update_state_comp_param::opcode (C++ 成员), 377
esp_ble_mesh_model_cb_param_t::client_recv_publish_msg (C++ 成员), 375
esp_ble_mesh_model_cb_param_t::client_send_timeout (C++ 成员), 375
esp_ble_mesh_model_cb_param_t::model_operation (C++ 成员), 374
esp_ble_mesh_model_cb_param_t::model_publish_comp (C++ 成员), 374
esp_ble_mesh_model_cb_param_t::model_publish_update (C++ 成员), 375
esp_ble_mesh_model_cb_param_t::model_send_comp (C++ 成员), 374
esp_ble_mesh_model_cb_param_t::server_model_update_state

(C++ 成员), 375
esp_ble_mesh_model_cb_t (C++ 类型), 436
esp_ble_mesh_model_cbs_t (C++ 类), 379
esp_ble_mesh_model_cbs_t::init_cb (C++ 成员), 379
ESP_BLE_MESH_MODEL_CFG_CLI (C 宏), 476
ESP_BLE_MESH_MODEL_CFG_SRV (C 宏), 476
ESP_BLE_MESH_MODEL_EVT_MAX (C++ 枚举子), 419
ESP_BLE_MESH_MODEL_GEN_ADMIN_PROP_SRV (C 宏), 517
ESP_BLE_MESH_MODEL_GEN_BATTERY_CLI (C 宏), 512
ESP_BLE_MESH_MODEL_GEN_BATTERY_SRV (C 宏), 515
ESP_BLE_MESH_MODEL_GEN_CLIENT_PROP_SRV (C 宏), 517
ESP_BLE_MESH_MODEL_GEN_DEF_TRANS_TIME_CLI (C 宏), 512
ESP_BLE_MESH_MODEL_GEN_DEF_TRANS_TIME_SRV (C 宏), 514
ESP_BLE_MESH_MODEL_GEN_LEVEL_CLI (C 宏), 511
ESP_BLE_MESH_MODEL_GEN_LEVEL_SRV (C 宏), 514
ESP_BLE_MESH_MODEL_GEN_LOCATION_CLI (C 宏), 513
ESP_BLE_MESH_MODEL_GEN_LOCATION_SETUP_SRV (C 宏), 516
ESP_BLE_MESH_MODEL_GEN_LOCATION_SRV (C 宏), 516
ESP_BLE_MESH_MODEL_GEN_MANUFACTURER_PROP_SRV (C 宏), 517
ESP_BLE_MESH_MODEL_GEN_ONOFF_CLI (C 宏), 511
ESP_BLE_MESH_MODEL_GEN_ONOFF_SRV (C 宏), 513
ESP_BLE_MESH_MODEL_GEN_POWER_LEVEL_CLI (C 宏), 512
ESP_BLE_MESH_MODEL_GEN_POWER_LEVEL_SETUP_SRV (C 宏), 515
ESP_BLE_MESH_MODEL_GEN_POWER_LEVEL_SRV (C 宏), 515
ESP_BLE_MESH_MODEL_GEN_POWER_ONOFF_CLI (C 宏), 512
ESP_BLE_MESH_MODEL_GEN_POWER_ONOFF_SETUP_SRV (C 宏), 514
ESP_BLE_MESH_MODEL_GEN_POWER_ONOFF_SRV (C 宏), 514
ESP_BLE_MESH_MODEL_GEN_PROPERTY_CLI (C 宏), 513
ESP_BLE_MESH_MODEL_GEN_USER_PROP_SRV (C 宏), 516
ESP_BLE_MESH_MODEL_HEALTH_CLI (C 宏), 528
ESP_BLE_MESH_MODEL_HEALTH_SRV (C 宏), 527
ESP_BLE_MESH_MODEL_ID_CONFIG_CLI (C 宏), 394
ESP_BLE_MESH_MODEL_ID_CONFIG_SRV (C 宏), 394
ESP_BLE_MESH_MODEL_ID_GEN_ADMIN_PROP_SRV (C 宏), 395
ESP_BLE_MESH_MODEL_ID_GEN_BATTERY_CLI (C 宏), 395
ESP_BLE_MESH_MODEL_ID_GEN_BATTERY_SRV (C 宏), 395
ESP_BLE_MESH_MODEL_ID_GEN_CLIENT_PROP_SRV (C 宏), 395
ESP_BLE_MESH_MODEL_ID_GEN_DEF_TRANS_TIME_CLI (C 宏), 394
ESP_BLE_MESH_MODEL_ID_GEN_DEF_TRANS_TIME_SRV (C 宏), 394
ESP_BLE_MESH_MODEL_ID_GEN_LEVEL_CLI (C 宏), 394
ESP_BLE_MESH_MODEL_ID_GEN_LEVEL_SRV (C 宏), 394
ESP_BLE_MESH_MODEL_ID_GEN_LOCATION_CLI (C 宏), 395
ESP_BLE_MESH_MODEL_ID_GEN_LOCATION_SETUP_SRV (C 宏), 395
ESP_BLE_MESH_MODEL_ID_GEN_LOCATION_SRV (C 宏), 395
ESP_BLE_MESH_MODEL_ID_GEN_MANUFACTURER_PROP_SRV (C 宏), 395
ESP_BLE_MESH_MODEL_ID_GEN_ONOFF_CLI (C 宏), 394
ESP_BLE_MESH_MODEL_ID_GEN_ONOFF_SRV (C 宏), 394
ESP_BLE_MESH_MODEL_ID_GEN_POWER_LEVEL_CLI (C 宏), 394
ESP_BLE_MESH_MODEL_ID_GEN_POWER_LEVEL_SETUP_SRV (C 宏), 394
ESP_BLE_MESH_MODEL_ID_GEN_POWER_LEVEL_SRV (C 宏), 394

ESP_BLE_MESH_MODEL_ID_GEN_POWER_ONOFF_CLI (C 宏), 394
ESP_BLE_MESH_MODEL_ID_GEN_POWER_ONOFF_SETUP_SRV (C 宏), 394
ESP_BLE_MESH_MODEL_ID_GEN_POWER_ONOFF_SRV (C 宏), 394
ESP_BLE_MESH_MODEL_ID_GEN_PROP_CLI (C 宏), 395
ESP_BLE_MESH_MODEL_ID_GEN_USER_PROP_SRV (C 宏), 395
ESP_BLE_MESH_MODEL_ID_HEALTH_CLI (C 宏), 394
ESP_BLE_MESH_MODEL_ID_HEALTH_SRV (C 宏), 394
ESP_BLE_MESH_MODEL_ID_LIGHT_CTL_CLI (C 宏), 395
ESP_BLE_MESH_MODEL_ID_LIGHT_CTL_SETUP_SRV (C 宏), 395
ESP_BLE_MESH_MODEL_ID_LIGHT_CTL_SRV (C 宏), 395
ESP_BLE_MESH_MODEL_ID_LIGHT_CTL_TEMP_SRV (C 宏), 395
ESP_BLE_MESH_MODEL_ID_LIGHT_HSL_CLI (C 宏), 396
ESP_BLE_MESH_MODEL_ID_LIGHT_HSL_HUE_SRV (C 宏), 396
ESP_BLE_MESH_MODEL_ID_LIGHT_HSL_SAT_SRV (C 宏), 396
ESP_BLE_MESH_MODEL_ID_LIGHT_HSL_SETUP_SRV (C 宏), 395
ESP_BLE_MESH_MODEL_ID_LIGHT_HSL_SRV (C 宏), 395
ESP_BLE_MESH_MODEL_ID_LIGHT_LC_CLI (C 宏), 396
ESP_BLE_MESH_MODEL_ID_LIGHT_LC_SETUP_SRV (C 宏), 396
ESP_BLE_MESH_MODEL_ID_LIGHT_LC_SRV (C 宏), 396
ESP_BLE_MESH_MODEL_ID_LIGHT_LIGHTNESS_CLI (C 宏), 395
ESP_BLE_MESH_MODEL_ID_LIGHT_LIGHTNESS_SETUP_SRV (C 宏), 395
ESP_BLE_MESH_MODEL_ID_LIGHT_LIGHTNESS_SRV (C 宏), 395
ESP_BLE_MESH_MODEL_ID_LIGHT_XYL_CLI (C 宏), 396
ESP_BLE_MESH_MODEL_ID_LIGHT_XYL_SETUP_SRV (C 宏), 396
ESP_BLE_MESH_MODEL_ID_LIGHT_XYL_SRV (C 宏), 396
ESP_BLE_MESH_MODEL_ID_SCENE_CLI (C 宏), 395
ESP_BLE_MESH_MODEL_ID_SCENE_SETUP_SRV (C 宏), 395
ESP_BLE_MESH_MODEL_ID_SCENE_SRV (C 宏), 395
ESP_BLE_MESH_MODEL_ID_SCHEDULER_CLI (C 宏), 395
ESP_BLE_MESH_MODEL_ID_SCHEDULER_SETUP_SRV (C 宏), 395
ESP_BLE_MESH_MODEL_ID_SCHEDULER_SRV (C 宏), 395
ESP_BLE_MESH_MODEL_ID_SENSOR_CLI (C 宏), 395
ESP_BLE_MESH_MODEL_ID_SENSOR_SETUP_SRV (C 宏), 395
ESP_BLE_MESH_MODEL_ID_SENSOR_SRV (C 宏), 395
ESP_BLE_MESH_MODEL_ID_TIME_CLI (C 宏), 395
ESP_BLE_MESH_MODEL_ID_TIME_SETUP_SRV (C 宏), 395
ESP_BLE_MESH_MODEL_ID_TIME_SRV (C 宏), 395
ESP_BLE_MESH_MODEL_LIGHT_CTL_CLI (C 宏), 580
ESP_BLE_MESH_MODEL_LIGHT_CTL_SETUP_SRV (C 宏), 583
ESP_BLE_MESH_MODEL_LIGHT_CTL_SRV (C 宏), 582
ESP_BLE_MESH_MODEL_LIGHT_CTL_TEMP_SRV (C 宏), 583
ESP_BLE_MESH_MODEL_LIGHT_HSL_CLI (C 宏), 581
ESP_BLE_MESH_MODEL_LIGHT_HSL_HUE_SRV (C 宏), 584
ESP_BLE_MESH_MODEL_LIGHT_HSL_SAT_SRV (C 宏), 584
ESP_BLE_MESH_MODEL_LIGHT_HSL_SETUP_SRV (C 宏), 584
ESP_BLE_MESH_MODEL_LIGHT_HSL_SRV (C 宏), 583
ESP_BLE_MESH_MODEL_LIGHT_LC_CLI (C 宏), 581
ESP_BLE_MESH_MODEL_LIGHT_LC_SETUP_SRV (C 宏), 586
ESP_BLE_MESH_MODEL_LIGHT_LC_SRV (C 宏), 585
ESP_BLE_MESH_MODEL_LIGHT_LIGHTNESS_CLI (C 宏), 580
ESP_BLE_MESH_MODEL_LIGHT_LIGHTNESS_SETUP_SRV

(C 宏), 582
ESP_BLE_MESH_MODEL_LIGHT_LIGHTNESS_SRV (C 宏), 582
ESP_BLE_MESH_MODEL_LIGHT_XYL_CLI (C 宏), 581
ESP_BLE_MESH_MODEL_LIGHT_XYL_SETUP_SRV (C 宏), 585
ESP_BLE_MESH_MODEL_LIGHT_XYL_SRV (C 宏), 585
esp_ble_mesh_model_msg_opcode_init (C++ 函数), 425
ESP_BLE_MESH_MODEL_NONE (C 宏), 393
ESP_BLE_MESH_MODEL_OP (C 宏), 393
ESP_BLE_MESH_MODEL_OP_1 (C 宏), 392
ESP_BLE_MESH_MODEL_OP_2 (C 宏), 392
ESP_BLE_MESH_MODEL_OP_3 (C 宏), 392
ESP_BLE_MESH_MODEL_OP_APP_KEY_ADD (C 宏), 398
ESP_BLE_MESH_MODEL_OP_APP_KEY_DELETE (C 宏), 398
ESP_BLE_MESH_MODEL_OP_APP_KEY_GET (C 宏), 396
ESP_BLE_MESH_MODEL_OP_APP_KEY_LIST (C 宏), 399
ESP_BLE_MESH_MODEL_OP_APP_KEY_STATUS (C 宏), 399
ESP_BLE_MESH_MODEL_OP_APP_KEY_UPDATE (C 宏), 398
ESP_BLE_MESH_MODEL_OP_ATTENTION_GET (C 宏), 400
ESP_BLE_MESH_MODEL_OP_ATTENTION_SET (C 宏), 400
ESP_BLE_MESH_MODEL_OP_ATTENTION_SET_UNACK (C 宏), 401
ESP_BLE_MESH_MODEL_OP_ATTENTION_STATUS (C 宏), 401
ESP_BLE_MESH_MODEL_OP_BEACON_GET (C 宏), 396
ESP_BLE_MESH_MODEL_OP_BEACON_SET (C 宏), 397
ESP_BLE_MESH_MODEL_OP_BEACON_STATUS (C 宏), 399
ESP_BLE_MESH_MODEL_OP_COMPOSITION_DATA_GET (C 宏), 396
ESP_BLE_MESH_MODEL_OP_COMPOSITION_DATA_STATUS (C 宏), 399
ESP_BLE_MESH_MODEL_OP_DEFAULT_TTL_GET (C 宏), 396
ESP_BLE_MESH_MODEL_OP_DEFAULT_TTL_SET (C 宏), 397
ESP_BLE_MESH_MODEL_OP_DEFAULT_TTL_STATUS (C 宏), 399
ESP_BLE_MESH_MODEL_OP_END (C 宏), 393
ESP_BLE_MESH_MODEL_OP_FRIEND_GET (C 宏), 396
ESP_BLE_MESH_MODEL_OP_FRIEND_SET (C 宏), 398
ESP_BLE_MESH_MODEL_OP_FRIEND_STATUS (C 宏), 399
ESP_BLE_MESH_MODEL_OP_GATT_PROXY_GET (C 宏), 396
ESP_BLE_MESH_MODEL_OP_GATT_PROXY_SET (C 宏), 397
ESP_BLE_MESH_MODEL_OP_GATT_PROXY_STATUS (C 宏), 399
ESP_BLE_MESH_MODEL_OP_GEN_ADMIN_PROPERTIES_GET (C 宏), 403
ESP_BLE_MESH_MODEL_OP_GEN_ADMIN_PROPERTIES_STATUS (C 宏), 403
ESP_BLE_MESH_MODEL_OP_GEN_ADMIN_PROPERTY_GET (C 宏), 403
ESP_BLE_MESH_MODEL_OP_GEN_ADMIN_PROPERTY_SET (C 宏), 403
ESP_BLE_MESH_MODEL_OP_GEN_ADMIN_PROPERTY_SET_UNACK (C 宏), 403
ESP_BLE_MESH_MODEL_OP_GEN_ADMIN_PROPERTY_STATUS (C 宏), 403
ESP_BLE_MESH_MODEL_OP_GEN_BATTERY_GET (C 宏), 402
ESP_BLE_MESH_MODEL_OP_GEN_BATTERY_STATUS (C 宏), 402
ESP_BLE_MESH_MODEL_OP_GEN_CLIENT_PROPERTIES_GET (C 宏), 403
ESP_BLE_MESH_MODEL_OP_GEN_CLIENT_PROPERTIES_STATUS (C 宏), 403
ESP_BLE_MESH_MODEL_OP_GEN_DEF_TRANS_TIME_GET (C 宏), 401
ESP_BLE_MESH_MODEL_OP_GEN_DEF_TRANS_TIME_SET (C 宏), 401
ESP_BLE_MESH_MODEL_OP_GEN_DEF_TRANS_TIME_SET_UNACK (C 宏), 401
ESP_BLE_MESH_MODEL_OP_GEN_DEF_TRANS_TIME_STATUS (C 宏), 401

ESP_BLE_MESH_MODEL_OP_GEN_DELTA_SET (C 宏), 401
ESP_BLE_MESH_MODEL_OP_GEN_DELTA_SET_UNACK (C 宏), 401
ESP_BLE_MESH_MODEL_OP_GEN_LEVEL_GET (C 宏), 401
ESP_BLE_MESH_MODEL_OP_GEN_LEVEL_SET (C 宏), 401
ESP_BLE_MESH_MODEL_OP_GEN_LEVEL_SET_UNACK (C 宏), 401
ESP_BLE_MESH_MODEL_OP_GEN_LEVEL_STATUS (C 宏), 401
ESP_BLE_MESH_MODEL_OP_GEN_LOC_GLOBAL_GET (C 宏), 402
ESP_BLE_MESH_MODEL_OP_GEN_LOC_GLOBAL_SET (C 宏), 402
ESP_BLE_MESH_MODEL_OP_GEN_LOC_GLOBAL_SET_UNACK (C 宏), 402
ESP_BLE_MESH_MODEL_OP_GEN_LOC_GLOBAL_STATUS (C 宏), 402
ESP_BLE_MESH_MODEL_OP_GEN_LOC_LOCAL_GET (C 宏), 402
ESP_BLE_MESH_MODEL_OP_GEN_LOC_LOCAL_SET (C 宏), 402
ESP_BLE_MESH_MODEL_OP_GEN_LOC_LOCAL_SET_UNACK (C 宏), 402
ESP_BLE_MESH_MODEL_OP_GEN_LOC_LOCAL_STATUS (C 宏), 402
ESP_BLE_MESH_MODEL_OP_GEN_MANUFACTURER_PROPERTIES_GET (C 宏), 402
ESP_BLE_MESH_MODEL_OP_GEN_MANUFACTURER_PROPERTIES_STATUS (C 宏), 402
ESP_BLE_MESH_MODEL_OP_GEN_MANUFACTURER_PROPERTY_GET (C 宏), 403
ESP_BLE_MESH_MODEL_OP_GEN_MANUFACTURER_PROPERTY_SET (C 宏), 403
ESP_BLE_MESH_MODEL_OP_GEN_MANUFACTURER_PROPERTY_SET_UNACK (C 宏), 403
ESP_BLE_MESH_MODEL_OP_GEN_MANUFACTURER_PROPERTY_STATUS (C 宏), 403
ESP_BLE_MESH_MODEL_OP_GEN_MOVE_SET (C 宏), 401
ESP_BLE_MESH_MODEL_OP_GEN_MOVE_SET_UNACK (C 宏), 401
ESP_BLE_MESH_MODEL_OP_GEN_ONOFF_GET (C 宏), 401
ESP_BLE_MESH_MODEL_OP_GEN_ONOFF_SET (C 宏), 401
ESP_BLE_MESH_MODEL_OP_GEN_ONOFF_SET_UNACK (C 宏), 401
ESP_BLE_MESH_MODEL_OP_GEN_ONOFF_STATUS (C 宏), 401
ESP_BLE_MESH_MODEL_OP_GEN_ONPOWERUP_GET (C 宏), 401
ESP_BLE_MESH_MODEL_OP_GEN_ONPOWERUP_SET (C 宏), 401
ESP_BLE_MESH_MODEL_OP_GEN_ONPOWERUP_SET_UNACK (C 宏), 401
ESP_BLE_MESH_MODEL_OP_GEN_ONPOWERUP_STATUS (C 宏), 401
ESP_BLE_MESH_MODEL_OP_GEN_POWER_DEFAULT_GET (C 宏), 402
ESP_BLE_MESH_MODEL_OP_GEN_POWER_DEFAULT_SET (C 宏), 402
ESP_BLE_MESH_MODEL_OP_GEN_POWER_DEFAULT_SET_UNACK (C 宏), 402
ESP_BLE_MESH_MODEL_OP_GEN_POWER_DEFAULT_STATUS (C 宏), 402
ESP_BLE_MESH_MODEL_OP_GEN_POWER_LAST_GET (C 宏), 402
ESP_BLE_MESH_MODEL_OP_GEN_POWER_LAST_STATUS (C 宏), 402
ESP_BLE_MESH_MODEL_OP_GEN_POWER_LEVEL_GET (C 宏), 402
ESP_BLE_MESH_MODEL_OP_GEN_POWER_LEVEL_SET (C 宏), 402
ESP_BLE_MESH_MODEL_OP_GEN_POWER_LEVEL_SET_UNACK (C 宏), 402
ESP_BLE_MESH_MODEL_OP_GEN_POWER_LEVEL_STATUS (C 宏), 402
ESP_BLE_MESH_MODEL_OP_GEN_POWER_RANGE_GET (C 宏), 402
ESP_BLE_MESH_MODEL_OP_GEN_POWER_RANGE_SET (C 宏), 402
ESP_BLE_MESH_MODEL_OP_GEN_POWER_RANGE_SET_UNACK

(C 宏), 402
ESP_BLE_MESH_MODEL_OP_GEN_POWER_RANGE_STATUS (C 宏), 402
ESP_BLE_MESH_MODEL_OP_GEN_USER_PROPERTIES_GET (C 宏), 403
ESP_BLE_MESH_MODEL_OP_GEN_USER_PROPERTIES_STATUS (C 宏), 403
ESP_BLE_MESH_MODEL_OP_GEN_USER_PROPERTY_GET (C 宏), 403
ESP_BLE_MESH_MODEL_OP_GEN_USER_PROPERTY_SET (C 宏), 403
ESP_BLE_MESH_MODEL_OP_GEN_USER_PROPERTY_SET_UNACK (C 宏), 403
ESP_BLE_MESH_MODEL_OP_GEN_USER_PROPERTY_STATUS (C 宏), 403
ESP_BLE_MESH_MODEL_OP_HEALTH_CURRENT_STATUS (C 宏), 401
ESP_BLE_MESH_MODEL_OP_HEALTH_FAULT_CLEAR (C 宏), 400
ESP_BLE_MESH_MODEL_OP_HEALTH_FAULT_CLEAR_UNACK (C 宏), 400
ESP_BLE_MESH_MODEL_OP_HEALTH_FAULT_GET (C 宏), 400
ESP_BLE_MESH_MODEL_OP_HEALTH_FAULT_STATUS (C 宏), 401
ESP_BLE_MESH_MODEL_OP_HEALTH_FAULT_TEST (C 宏), 400
ESP_BLE_MESH_MODEL_OP_HEALTH_FAULT_TEST_UNACK (C 宏), 400
ESP_BLE_MESH_MODEL_OP_HEALTH_PERIOD_GET (C 宏), 400
ESP_BLE_MESH_MODEL_OP_HEALTH_PERIOD_SET (C 宏), 400
ESP_BLE_MESH_MODEL_OP_HEALTH_PERIOD_SET_UNACK (C 宏), 400
ESP_BLE_MESH_MODEL_OP_HEALTH_PERIOD_STATUS (C 宏), 401
ESP_BLE_MESH_MODEL_OP_HEARTBEAT_PUB_GET (C 宏), 396
ESP_BLE_MESH_MODEL_OP_HEARTBEAT_PUB_SET (C 宏), 398
ESP_BLE_MESH_MODEL_OP_HEARTBEAT_PUB_STATUS (C 宏), 399
ESP_BLE_MESH_MODEL_OP_HEARTBEAT_SUB_GET (C 宏), 396
ESP_BLE_MESH_MODEL_OP_HEARTBEAT_SUB_SET (C 宏), 398
ESP_BLE_MESH_MODEL_OP_HEARTBEAT_SUB_STATUS (C 宏), 399
ESP_BLE_MESH_MODEL_OP_KEY_REFRESH_PHASE_GET (C 宏), 397
ESP_BLE_MESH_MODEL_OP_KEY_REFRESH_PHASE_SET (C 宏), 398
ESP_BLE_MESH_MODEL_OP_KEY_REFRESH_PHASE_STATUS (C 宏), 399
ESP_BLE_MESH_MODEL_OP_LIGHT_CTL_DEFAULT_GET (C 宏), 406
ESP_BLE_MESH_MODEL_OP_LIGHT_CTL_DEFAULT_SET (C 宏), 406
ESP_BLE_MESH_MODEL_OP_LIGHT_CTL_DEFAULT_SET_UNACK (C 宏), 406
ESP_BLE_MESH_MODEL_OP_LIGHT_CTL_DEFAULT_STATUS (C 宏), 406
ESP_BLE_MESH_MODEL_OP_LIGHT_CTL_GET (C 宏), 405
ESP_BLE_MESH_MODEL_OP_LIGHT_CTL_SET (C 宏), 406
ESP_BLE_MESH_MODEL_OP_LIGHT_CTL_SET_UNACK (C 宏), 406
ESP_BLE_MESH_MODEL_OP_LIGHT_CTL_STATUS (C 宏), 406
ESP_BLE_MESH_MODEL_OP_LIGHT_CTL_TEMPERATURE_GET (C 宏), 406
ESP_BLE_MESH_MODEL_OP_LIGHT_CTL_TEMPERATURE_RANGE_GET (C 宏), 406
ESP_BLE_MESH_MODEL_OP_LIGHT_CTL_TEMPERATURE_RANGE_SET (C 宏), 406
ESP_BLE_MESH_MODEL_OP_LIGHT_CTL_TEMPERATURE_RANGE_SET_UNAC (C 宏), 406
ESP_BLE_MESH_MODEL_OP_LIGHT_CTL_TEMPERATURE_RANGE_STATUS (C 宏), 406
ESP_BLE_MESH_MODEL_OP_LIGHT_CTL_TEMPERATURE_SET (C 宏), 406
ESP_BLE_MESH_MODEL_OP_LIGHT_CTL_TEMPERATURE_SET_UNACK

(C 宏), 406
ESP_BLE_MESH_MODEL_OP_LIGHT_CTL_TEMPERATURE_STATUS (C 宏), 406
ESP_BLE_MESH_MODEL_OP_LIGHT_HSL_DEFAULT_GET (C 宏), 407
ESP_BLE_MESH_MODEL_OP_LIGHT_HSL_DEFAULT_SET (C 宏), 407
ESP_BLE_MESH_MODEL_OP_LIGHT_HSL_DEFAULT_SET_UNACK (C 宏), 407
ESP_BLE_MESH_MODEL_OP_LIGHT_HSL_DEFAULT_STATUS (C 宏), 407
ESP_BLE_MESH_MODEL_OP_LIGHT_HSL_GET (C 宏), 406
ESP_BLE_MESH_MODEL_OP_LIGHT_HSL_HUE_GET (C 宏), 406
ESP_BLE_MESH_MODEL_OP_LIGHT_HSL_HUE_SET (C 宏), 406
ESP_BLE_MESH_MODEL_OP_LIGHT_HSL_HUE_SET_UNACK (C 宏), 406
ESP_BLE_MESH_MODEL_OP_LIGHT_HSL_HUE_STATUS (C 宏), 406
ESP_BLE_MESH_MODEL_OP_LIGHT_HSL_RANGE_GET (C 宏), 407
ESP_BLE_MESH_MODEL_OP_LIGHT_HSL_RANGE_SET (C 宏), 407
ESP_BLE_MESH_MODEL_OP_LIGHT_HSL_RANGE_SET_UNACK (C 宏), 407
ESP_BLE_MESH_MODEL_OP_LIGHT_HSL_RANGE_STATUS (C 宏), 407
ESP_BLE_MESH_MODEL_OP_LIGHT_HSL_SATURATION_GET (C 宏), 406
ESP_BLE_MESH_MODEL_OP_LIGHT_HSL_SATURATION_SET (C 宏), 406
ESP_BLE_MESH_MODEL_OP_LIGHT_HSL_SATURATION_SET_UNACK (C 宏), 406
ESP_BLE_MESH_MODEL_OP_LIGHT_HSL_SATURATION_STATUS (C 宏), 406
ESP_BLE_MESH_MODEL_OP_LIGHT_HSL_SET (C 宏), 406
ESP_BLE_MESH_MODEL_OP_LIGHT_HSL_SET_UNACK (C 宏), 406
ESP_BLE_MESH_MODEL_OP_LIGHT_HSL_STATUS (C 宏), 406
ESP_BLE_MESH_MODEL_OP_LIGHT_HSL_TARGET_GET (C 宏), 406
ESP_BLE_MESH_MODEL_OP_LIGHT_HSL_TARGET_STATUS (C 宏), 406
ESP_BLE_MESH_MODEL_OP_LIGHT_LC_LIGHT_ONOFF_GET (C 宏), 408
ESP_BLE_MESH_MODEL_OP_LIGHT_LC_LIGHT_ONOFF_SET (C 宏), 408
ESP_BLE_MESH_MODEL_OP_LIGHT_LC_LIGHT_ONOFF_SET_UNACK (C 宏), 408
ESP_BLE_MESH_MODEL_OP_LIGHT_LC_LIGHT_ONOFF_STATUS (C 宏), 408
ESP_BLE_MESH_MODEL_OP_LIGHT_LC_MODE_GET (C 宏), 407
ESP_BLE_MESH_MODEL_OP_LIGHT_LC_MODE_SET (C 宏), 407
ESP_BLE_MESH_MODEL_OP_LIGHT_LC_MODE_SET_UNACK (C 宏), 407
ESP_BLE_MESH_MODEL_OP_LIGHT_LC_MODE_STATUS (C 宏), 407
ESP_BLE_MESH_MODEL_OP_LIGHT_LC_OM_GET (C 宏), 407
ESP_BLE_MESH_MODEL_OP_LIGHT_LC_OM_SET (C 宏), 408
ESP_BLE_MESH_MODEL_OP_LIGHT_LC_OM_SET_UNACK (C 宏), 408
ESP_BLE_MESH_MODEL_OP_LIGHT_LC_OM_STATUS (C 宏), 408
ESP_BLE_MESH_MODEL_OP_LIGHT_LC_PROPERTY_GET (C 宏), 408
ESP_BLE_MESH_MODEL_OP_LIGHT_LC_PROPERTY_SET (C 宏), 408
ESP_BLE_MESH_MODEL_OP_LIGHT_LC_PROPERTY_SET_UNACK (C 宏), 408
ESP_BLE_MESH_MODEL_OP_LIGHT_LC_PROPERTY_STATUS (C 宏), 408
ESP_BLE_MESH_MODEL_OP_LIGHT_LIGHTNESS_DEFAULT_GET (C 宏), 405
ESP_BLE_MESH_MODEL_OP_LIGHT_LIGHTNESS_DEFAULT_SET (C 宏), 405
ESP_BLE_MESH_MODEL_OP_LIGHT_LIGHTNESS_DEFAULT_SET_UNACK

(C 宏), 405
ESP_BLE_MESH_MODEL_OP_LIGHT_LIGHTNESS_DEFAULT_STATUS (C 宏), 405
ESP_BLE_MESH_MODEL_OP_LIGHT_LIGHTNESS_GET (C 宏), 405
ESP_BLE_MESH_MODEL_OP_LIGHT_LIGHTNESS_LAST_GET (C 宏), 405
ESP_BLE_MESH_MODEL_OP_LIGHT_LIGHTNESS_LAST_STATUS (C 宏), 405
ESP_BLE_MESH_MODEL_OP_LIGHT_LIGHTNESS_LINEAR_GET (C 宏), 405
ESP_BLE_MESH_MODEL_OP_LIGHT_LIGHTNESS_LINEAR_SET (C 宏), 405
ESP_BLE_MESH_MODEL_OP_LIGHT_LIGHTNESS_LINEAR_SET_UNACK (C 宏), 405
ESP_BLE_MESH_MODEL_OP_LIGHT_LIGHTNESS_LINEAR_STATUS (C 宏), 405
ESP_BLE_MESH_MODEL_OP_LIGHT_LIGHTNESS_RANGE_GET (C 宏), 405
ESP_BLE_MESH_MODEL_OP_LIGHT_LIGHTNESS_RANGE_SET (C 宏), 405
ESP_BLE_MESH_MODEL_OP_LIGHT_LIGHTNESS_RANGE_SET_UNACK (C 宏), 405
ESP_BLE_MESH_MODEL_OP_LIGHT_LIGHTNESS_RANGE_STATUS (C 宏), 405
ESP_BLE_MESH_MODEL_OP_LIGHT_LIGHTNESS_SET (C 宏), 405
ESP_BLE_MESH_MODEL_OP_LIGHT_LIGHTNESS_SET_UNACK (C 宏), 405
ESP_BLE_MESH_MODEL_OP_LIGHT_LIGHTNESS_STATUS (C 宏), 405
ESP_BLE_MESH_MODEL_OP_LIGHT_XYL_DEFAULT_GET (C 宏), 407
ESP_BLE_MESH_MODEL_OP_LIGHT_XYL_DEFAULT_SET (C 宏), 407
ESP_BLE_MESH_MODEL_OP_LIGHT_XYL_DEFAULT_SET_UNACK (C 宏), 407
ESP_BLE_MESH_MODEL_OP_LIGHT_XYL_DEFAULT_STATUS (C 宏), 407
ESP_BLE_MESH_MODEL_OP_LIGHT_XYL_GET (C 宏), 407
ESP_BLE_MESH_MODEL_OP_LIGHT_XYL_RANGE_GET (C 宏), 407
ESP_BLE_MESH_MODEL_OP_LIGHT_XYL_RANGE_SET (C 宏), 407
ESP_BLE_MESH_MODEL_OP_LIGHT_XYL_RANGE_SET_UNACK (C 宏), 407
ESP_BLE_MESH_MODEL_OP_LIGHT_XYL_RANGE_STATUS (C 宏), 407
ESP_BLE_MESH_MODEL_OP_LIGHT_XYL_SET (C 宏), 407
ESP_BLE_MESH_MODEL_OP_LIGHT_XYL_SET_UNACK (C 宏), 407
ESP_BLE_MESH_MODEL_OP_LIGHT_XYL_STATUS (C 宏), 407
ESP_BLE_MESH_MODEL_OP_LIGHT_XYL_TARGET_GET (C 宏), 407
ESP_BLE_MESH_MODEL_OP_LIGHT_XYL_TARGET_STATUS (C 宏), 407
ESP_BLE_MESH_MODEL_OP_LPN_POLLTIMEOUT_GET (C 宏), 397
ESP_BLE_MESH_MODEL_OP_LPN_POLLTIMEOUT_STATUS (C 宏), 399
ESP_BLE_MESH_MODEL_OP_MODEL_APP_BIND (C 宏), 398
ESP_BLE_MESH_MODEL_OP_MODEL_APP_STATUS (C 宏), 399
ESP_BLE_MESH_MODEL_OP_MODEL_APP_UNBIND (C 宏), 398
ESP_BLE_MESH_MODEL_OP_MODEL_PUB_GET (C 宏), 396
ESP_BLE_MESH_MODEL_OP_MODEL_PUB_SET (C 宏), 397
ESP_BLE_MESH_MODEL_OP_MODEL_PUB_STATUS (C 宏), 399
ESP_BLE_MESH_MODEL_OP_MODEL_PUB_VIRTUAL_ADDR_SET (C 宏), 398
ESP_BLE_MESH_MODEL_OP_MODEL_SUB_ADD (C 宏), 397
ESP_BLE_MESH_MODEL_OP_MODEL_SUB_DELETE (C 宏), 397
ESP_BLE_MESH_MODEL_OP_MODEL_SUB_DELETE_ALL (C 宏), 398
ESP_BLE_MESH_MODEL_OP_MODEL_SUB_OVERWRITE (C

宏), 397
ESP_BLE_MESH_MODEL_OP_MODEL_SUB_STATUS (C 宏), 399
ESP_BLE_MESH_MODEL_OP_MODEL_SUB_VIRTUAL_ADDR_ADD (C 宏), 397
ESP_BLE_MESH_MODEL_OP_MODEL_SUB_VIRTUAL_ADDR_DELETE (C 宏), 397
ESP_BLE_MESH_MODEL_OP_MODEL_SUB_VIRTUAL_ADDR_OVERWRITE (C 宏), 398
ESP_BLE_MESH_MODEL_OP_NET_KEY_ADD (C 宏), 398
ESP_BLE_MESH_MODEL_OP_NET_KEY_DELETE (C 宏), 398
ESP_BLE_MESH_MODEL_OP_NET_KEY_GET (C 宏), 396
ESP_BLE_MESH_MODEL_OP_NET_KEY_LIST (C 宏), 399
ESP_BLE_MESH_MODEL_OP_NET_KEY_STATUS (C 宏), 399
ESP_BLE_MESH_MODEL_OP_NET_KEY_UPDATE (C 宏), 398
ESP_BLE_MESH_MODEL_OP_NETWORK_TRANSMIT_GET (C 宏), 397
ESP_BLE_MESH_MODEL_OP_NETWORK_TRANSMIT_SET (C 宏), 399
ESP_BLE_MESH_MODEL_OP_NETWORK_TRANSMIT_STATUS (C 宏), 399
ESP_BLE_MESH_MODEL_OP_NODE_IDENTITY_GET (C 宏), 396
ESP_BLE_MESH_MODEL_OP_NODE_IDENTITY_SET (C 宏), 398
ESP_BLE_MESH_MODEL_OP_NODE_IDENTITY_STATUS (C 宏), 399
ESP_BLE_MESH_MODEL_OP_NODE_RESET (C 宏), 398
ESP_BLE_MESH_MODEL_OP_NODE_RESET_STATUS (C 宏), 399
ESP_BLE_MESH_MODEL_OP_RELAY_GET (C 宏), 396
ESP_BLE_MESH_MODEL_OP_RELAY_SET (C 宏), 397
ESP_BLE_MESH_MODEL_OP_RELAY_STATUS (C 宏), 399
ESP_BLE_MESH_MODEL_OP_SCENE_DELETE (C 宏), 405
ESP_BLE_MESH_MODEL_OP_SCENE_DELETE_UNACK (C 宏), 405
ESP_BLE_MESH_MODEL_OP_SCENE_GET (C 宏), 404
ESP_BLE_MESH_MODEL_OP_SCENE_RECALL (C 宏), 404
ESP_BLE_MESH_MODEL_OP_SCENE_RECALL_UNACK (C 宏), 404
ESP_BLE_MESH_MODEL_OP_SCENE_REGISTER_GET (C 宏), 404
ESP_BLE_MESH_MODEL_OP_SCENE_REGISTER_STATUS (C 宏), 404
ESP_BLE_MESH_MODEL_OP_SCENE_STATUS (C 宏), 404
ESP_BLE_MESH_MODEL_OP_SCENE_STORE (C 宏), 404
ESP_BLE_MESH_MODEL_OP_SCENE_STORE_UNACK (C 宏), 404
ESP_BLE_MESH_MODEL_OP_SCHEDULER_ACT_GET (C 宏), 405
ESP_BLE_MESH_MODEL_OP_SCHEDULER_ACT_SET (C 宏), 405
ESP_BLE_MESH_MODEL_OP_SCHEDULER_ACT_SET_UNACK (C 宏), 405
ESP_BLE_MESH_MODEL_OP_SCHEDULER_ACT_STATUS (C 宏), 405
ESP_BLE_MESH_MODEL_OP_SCHEDULER_GET (C 宏), 405
ESP_BLE_MESH_MODEL_OP_SCHEDULER_STATUS (C 宏), 405
ESP_BLE_MESH_MODEL_OP_SENSOR_CADENCE_GET (C 宏), 403
ESP_BLE_MESH_MODEL_OP_SENSOR_CADENCE_SET (C 宏), 404
ESP_BLE_MESH_MODEL_OP_SENSOR_CADENCE_SET_UNACK (C 宏), 404
ESP_BLE_MESH_MODEL_OP_SENSOR_CADENCE_STATUS (C 宏), 404
ESP_BLE_MESH_MODEL_OP_SENSOR_COLUMN_GET (C 宏), 403
ESP_BLE_MESH_MODEL_OP_SENSOR_COLUMN_STATUS (C 宏), 403
ESP_BLE_MESH_MODEL_OP_SENSOR_DESCRIPTOR_GET (C 宏), 403
ESP_BLE_MESH_MODEL_OP_SENSOR_DESCRIPTOR_STATUS (C 宏), 403
ESP_BLE_MESH_MODEL_OP_SENSOR_GET (C 宏), 403
ESP_BLE_MESH_MODEL_OP_SENSOR_SERIES_GET (C 宏), 403
ESP_BLE_MESH_MODEL_OP_SENSOR_SERIES_STATUS (C 宏), 403

ESP_BLE_MESH_MODEL_OP_SENSOR_SETTING_GET (C 宏), 404
ESP_BLE_MESH_MODEL_OP_SENSOR_SETTING_SET (C 宏), 404
ESP_BLE_MESH_MODEL_OP_SENSOR_SETTING_SET_UNACK (C 宏), 404
ESP_BLE_MESH_MODEL_OP_SENSOR_SETTING_STATUS (C 宏), 404
ESP_BLE_MESH_MODEL_OP_SENSOR_SETTINGS_GET (C 宏), 404
ESP_BLE_MESH_MODEL_OP_SENSOR_SETTINGS_STATUS (C 宏), 404
ESP_BLE_MESH_MODEL_OP_SENSOR_STATUS (C 宏), 403
ESP_BLE_MESH_MODEL_OP_SIG_MODEL_APP_GET (C 宏), 397
ESP_BLE_MESH_MODEL_OP_SIG_MODEL_APP_LIST (C 宏), 399
ESP_BLE_MESH_MODEL_OP_SIG_MODEL_SUB_GET (C 宏), 397
ESP_BLE_MESH_MODEL_OP_SIG_MODEL_SUB_LIST (C 宏), 399
esp_ble_mesh_model_op_t (C++ 类), 379
esp_ble_mesh_model_op_t::min_len (C++ 成员), 379
esp_ble_mesh_model_op_t::opcode (C++ 成员), 379
esp_ble_mesh_model_op_t::param_cb (C++ 成员), 379
ESP_BLE_MESH_MODEL_OP_TAI_UTC_DELTA_GET (C 宏), 404
ESP_BLE_MESH_MODEL_OP_TAI_UTC_DELTA_SET (C 宏), 404
ESP_BLE_MESH_MODEL_OP_TAI_UTC_DELTA_STATUS (C 宏), 404
ESP_BLE_MESH_MODEL_OP_TIME_GET (C 宏), 404
ESP_BLE_MESH_MODEL_OP_TIME_ROLE_GET (C 宏), 404
ESP_BLE_MESH_MODEL_OP_TIME_ROLE_SET (C 宏), 404
ESP_BLE_MESH_MODEL_OP_TIME_ROLE_STATUS (C 宏), 404
ESP_BLE_MESH_MODEL_OP_TIME_SET (C 宏), 404
ESP_BLE_MESH_MODEL_OP_TIME_STATUS (C 宏), 404
ESP_BLE_MESH_MODEL_OP_TIME_ZONE_GET (C 宏), 404
ESP_BLE_MESH_MODEL_OP_TIME_ZONE_SET (C 宏), 404
ESP_BLE_MESH_MODEL_OP_TIME_ZONE_STATUS (C 宏), 404
ESP_BLE_MESH_MODEL_OP_VENDOR_MODEL_APP_GET (C 宏), 397
ESP_BLE_MESH_MODEL_OP_VENDOR_MODEL_APP_LIST (C 宏), 399
ESP_BLE_MESH_MODEL_OP_VENDOR_MODEL_SUB_GET (C 宏), 397
ESP_BLE_MESH_MODEL_OP_VENDOR_MODEL_SUB_LIST (C 宏), 399
ESP_BLE_MESH_MODEL_OPERATION_EVT (C++ 枚举子), 418
ESP_BLE_MESH_MODEL_PUB_DEFINE (C 宏), 393
esp_ble_mesh_model_pub_t (C++ 类), 378
esp_ble_mesh_model_pub_t::app_idx (C++ 成员), 378
esp_ble_mesh_model_pub_t::count (C++ 成员), 378
esp_ble_mesh_model_pub_t::cred (C++ 成员), 378
esp_ble_mesh_model_pub_t::dev_role (C++ 成员), 379
esp_ble_mesh_model_pub_t::fast_period (C++ 成员), 378
esp_ble_mesh_model_pub_t::model (C++ 成员), 378
esp_ble_mesh_model_pub_t::msg (C++ 成员), 379
esp_ble_mesh_model_pub_t::period (C++ 成员), 378
esp_ble_mesh_model_pub_t::period_div (C++ 成员), 378
esp_ble_mesh_model_pub_t::period_start (C++ 成员), 378
esp_ble_mesh_model_pub_t::publish_addr (C++ 成员), 378
esp_ble_mesh_model_pub_t::retransmit (C++

成员), 378
esp_ble_mesh_model_pub_t::send_rel (C++ 成员), 378
esp_ble_mesh_model_pub_t::timer (C++ 成员), 379
esp_ble_mesh_model_pub_t::ttl (C++ 成员), 378
esp_ble_mesh_model_pub_t::update (C++ 成员), 379
esp_ble_mesh_model_publish (C++ 函数), 427
ESP_BLE_MESH_MODEL_PUBLISH_COMP_EVT (C++ 枚举子), 418
ESP_BLE_MESH_MODEL_PUBLISH_UPDATE_EVT (C++ 枚举子), 418
ESP_BLE_MESH_MODEL_SCENE_CLI (C 宏), 632
ESP_BLE_MESH_MODEL_SCENE_SETUP_SRV (C 宏), 634
ESP_BLE_MESH_MODEL_SCENE_SRV (C 宏), 633
ESP_BLE_MESH_MODEL_SCHEDULER_CLI (C 宏), 632
ESP_BLE_MESH_MODEL_SCHEDULER_SETUP_SRV (C 宏), 634
ESP_BLE_MESH_MODEL_SCHEDULER_SRV (C 宏), 634
ESP_BLE_MESH_MODEL_SEND_COMP_EVT (C++ 枚举子), 418
ESP_BLE_MESH_MODEL_SENSOR_CLI (C 宏), 603
ESP_BLE_MESH_MODEL_SENSOR_SETUP_SRV (C 宏), 604
ESP_BLE_MESH_MODEL_SENSOR_SRV (C 宏), 603
ESP_BLE_MESH_MODEL_STATUS_CANNOT_SET_RANGE_MAX (C 宏), 408
ESP_BLE_MESH_MODEL_STATUS_CANNOT_SET_RANGE_MIN (C 宏), 408
ESP_BLE_MESH_MODEL_STATUS_SUCCESS (C 宏), 408
esp_ble_mesh_model_status_t (C++ 类型), 410
esp_ble_mesh_model_subscribe_group_addr (C++ 函数), 422
ESP_BLE_MESH_MODEL_SUBSCRIBE_GROUP_ADDR_COMP_EVT (C++ 枚举子), 417
esp_ble_mesh_model_t (C++ 类型), 409
ESP_BLE_MESH_MODEL_TIME_CLI (C 宏), 632
ESP_BLE_MESH_MODEL_TIME_SETUP_SRV (C 宏), 633
ESP_BLE_MESH_MODEL_TIME_SRV (C 宏), 633
esp_ble_mesh_model_unsubscribe_group_addr (C++ 函数), 422
ESP_BLE_MESH_MODEL_UNSUBSCRIBE_GROUP_ADDR_COMP_EVT (C++ 枚举子), 417
esp_ble_mesh_msg_ctx_t (C++ 类), 380
esp_ble_mesh_msg_ctx_t::addr (C++ 成员), 380
esp_ble_mesh_msg_ctx_t::app_idx (C++ 成员), 380
esp_ble_mesh_msg_ctx_t::model (C++ 成员), 381
esp_ble_mesh_msg_ctx_t::net_idx (C++ 成员), 380
esp_ble_mesh_msg_ctx_t::recv_dst (C++ 成员), 380
esp_ble_mesh_msg_ctx_t::recv_op (C++ 成员), 381
esp_ble_mesh_msg_ctx_t::recv_rssi (C++ 成员), 381
esp_ble_mesh_msg_ctx_t::recv_ttl (C++ 成员), 381
esp_ble_mesh_msg_ctx_t::send_rel (C++ 成员), 381
esp_ble_mesh_msg_ctx_t::send_ttl (C++ 成员), 381
esp_ble_mesh_msg_ctx_t::srv_send (C++ 成员), 381
ESP_BLE_MESH_NET_PRIMARY (C 宏), 390
ESP_BLE_MESH_NO_FAULT (C 宏), 528
ESP_BLE_MESH_NO_INPUT (C++ 枚举子), 411
ESP_BLE_MESH_NO_LOAD_ERROR (C 宏), 528
ESP_BLE_MESH_NO_LOAD_WARNING (C 宏), 528
ESP_BLE_MESH_NO_OOB (C++ 枚举子), 410
ESP_BLE_MESH_NO_OUTPUT (C++ 枚举子), 411
esp_ble_mesh_node_add_local_app_key (C++ 函数), 423
ESP_BLE_MESH_NODE_ADD_LOCAL_APP_KEY_COMP_EVT (C++ 枚举子), 413
esp_ble_mesh_node_add_local_net_key (C++ 函数), 423
ESP_BLE_MESH_NODE_ADD_LOCAL_NET_KEY_COMP_EVT (C++ 枚举子), 413
esp_ble_mesh_node_bind_app_key_to_local_model (C++ 函数), 423
ESP_BLE_MESH_NODE_BIND_APP_KEY_TO_MODEL_COMP_EVT (C++ 枚举子), 414

esp_ble_mesh_node_get_local_app_key (C++ 函数), 422
esp_ble_mesh_node_get_local_net_key (C++ 函数), 422
ESP_BLE_MESH_NODE_IDENTITY_NOT_SUPPORTED (C 宏), 390
ESP_BLE_MESH_NODE_IDENTITY_RUNNING (C 宏), 390
ESP_BLE_MESH_NODE_IDENTITY_STOPPED (C 宏), 390
esp_ble_mesh_node_input_number (C++ 函数), 437
esp_ble_mesh_node_input_string (C++ 函数), 438
esp_ble_mesh_node_is_provisioned (C++ 函数), 437
esp_ble_mesh_node_local_reset (C++ 函数), 428
ESP_BLE_MESH_NODE_NAME_MAX_LEN (C 宏), 389
ESP_BLE_MESH_NODE_PROV_COMPLETE_EVT (C++ 枚举子), 413
esp_ble_mesh_node_prov_disable (C++ 函数), 437
ESP_BLE_MESH_NODE_PROV_DISABLE_COMP_EVT (C++ 枚举子), 413
esp_ble_mesh_node_prov_enable (C++ 函数), 437
ESP_BLE_MESH_NODE_PROV_ENABLE_COMP_EVT (C++ 枚举子), 412
ESP_BLE_MESH_NODE_PROV_INPUT_EVT (C++ 枚举子), 413
ESP_BLE_MESH_NODE_PROV_INPUT_NUMBER_COMP_EVT (C++ 枚举子), 413
ESP_BLE_MESH_NODE_PROV_INPUT_STRING_COMP_EVT (C++ 枚举子), 413
ESP_BLE_MESH_NODE_PROV_LINK_CLOSE_EVT (C++ 枚举子), 413
ESP_BLE_MESH_NODE_PROV_LINK_OPEN_EVT (C++ 枚举子), 413
ESP_BLE_MESH_NODE_PROV_OOB_PUB_KEY_EVT (C++ 枚举子), 413
ESP_BLE_MESH_NODE_PROV_OUTPUT_NUMBER_EVT (C++ 枚举子), 413
ESP_BLE_MESH_NODE_PROV_OUTPUT_STRING_EVT (C++ 枚举子), 413
ESP_BLE_MESH_NODE_PROV_RESET_EVT (C++ 枚举子), 413
ESP_BLE_MESH_NODE_PROV_SET_OOB_PUB_KEY_COMP_EVT (C++ 枚举子), 413
ESP_BLE_MESH_NODE_PROXY_GATT_DISABLE_COMP_EVT (C++ 枚举子), 413
ESP_BLE_MESH_NODE_PROXY_GATT_ENABLE_COMP_EVT (C++ 枚举子), 413
ESP_BLE_MESH_NODE_PROXY_IDENTITY_ENABLE_COMP_EVT (C++ 枚举子), 413
esp_ble_mesh_node_set_oob_pub_key (C++ 函数), 437
ESP_BLE_MESH_NODE_SET_UNPROV_DEV_NAME_COMP_EVT (C++ 枚举子), 412
esp_ble_mesh_node_t (C++ 类), 383
esp_ble_mesh_node_t::addr (C++ 成员), 383
esp_ble_mesh_node_t::addr_type (C++ 成员), 383
esp_ble_mesh_node_t::comp_data (C++ 成员), 383
esp_ble_mesh_node_t::comp_length (C++ 成员), 383
esp_ble_mesh_node_t::dev_key (C++ 成员), 383
esp_ble_mesh_node_t::dev_uuid (C++ 成员), 383
esp_ble_mesh_node_t::element_num (C++ 成员), 383
esp_ble_mesh_node_t::flags (C++ 成员), 383
esp_ble_mesh_node_t::iv_index (C++ 成员), 383
esp_ble_mesh_node_t::name (C++ 成员), 383
esp_ble_mesh_node_t::net_idx (C++ 成员), 383
esp_ble_mesh_node_t::oob_info (C++ 成员), 383
esp_ble_mesh_node_t::unicast_addr (C++ 成员), 383
ESP_BLE_MESH_OCTET16_LEN (C 宏), 389
esp_ble_mesh_octet16_t (C++ 类型), 408
ESP_BLE_MESH_OCTET8_LEN (C 宏), 389
esp_ble_mesh_octet8_t (C++ 类型), 408
esp_ble_mesh_oob_method_t (C++ 类型), 410
esp_ble_mesh_opcode_config_client_get_t (C++ 类型), 409
esp_ble_mesh_opcode_config_client_set_t (C++ 类型), 409
esp_ble_mesh_opcode_config_status_t (C++ 类

型), 409
esp_ble_mesh_opcode_health_client_get_t (C++ 类型), 409
esp_ble_mesh_opcode_health_client_set_t (C++ 类型), 409
esp_ble_mesh_opcode_t (C++ 类型), 410
esp_ble_mesh_output_action_t (C++ 类型), 411
ESP_BLE_MESH_OUTPUT_OOB (C++ 枚举子), 411
ESP_BLE_MESH_OVERFLOW_ERROR (C 宏), 530
ESP_BLE_MESH_OVERFLOW_WARNING (C 宏), 530
ESP_BLE_MESH_OVERHEAT_ERROR (C 宏), 529
ESP_BLE_MESH_OVERHEAT_WARNING (C 宏), 529
ESP_BLE_MESH_OVERLOAD_ERROR (C 宏), 529
ESP_BLE_MESH_OVERLOAD_WARNING (C 宏), 528
ESP_BLE_MESH_POWER_SUPPLY_INTERRUPTED_ERROR (C 宏), 528
ESP_BLE_MESH_POWER_SUPPLY_INTERRUPTED_WARNING (C 宏), 528
ESP_BLE_MESH_PROV (C 宏), 393
ESP_BLE_MESH_PROV_ADV (C++ 枚举子), 411
esp_ble_mesh_prov_adv_cb_t (C++ 类型), 443
esp_ble_mesh_prov_bearer_t (C++ 类型), 411
esp_ble_mesh_prov_cb_event_t (C++ 类型), 412
esp_ble_mesh_prov_cb_param_t (C++ 类型), 348
esp_ble_mesh_prov_cb_param_t::__anonymous31 (C++ 类型), 355
esp_ble_mesh_prov_cb_param_t::ble_mesh_deinit_mesh_comp_param (C++ 类), 354
esp_ble_mesh_prov_cb_param_t::ble_mesh_deinit_mesh_comp_param::err_code (C++ 成员), 354
esp_ble_mesh_prov_cb_param_t::ble_mesh_friend_establish_param (C++ 类), 354
esp_ble_mesh_prov_cb_param_t::ble_mesh_friend_establish_param::lpn_addr (C++ 成员), 354
esp_ble_mesh_prov_cb_param_t::ble_mesh_friend_terminate_param (C++ 类), 354
esp_ble_mesh_prov_cb_param_t::ble_mesh_friend_terminate_param::lpn_addr (C++ 成员), 355
esp_ble_mesh_prov_cb_param_t::ble_mesh_friend_terminate_param::reason (C++ 成员), 355
esp_ble_mesh_prov_cb_param_t::ble_mesh_heartbeat_msg_recv_param (C++ 类), 355
esp_ble_mesh_prov_cb_param_t::ble_mesh_heartbeat_msg_recv (C++ 成员), 355
esp_ble_mesh_prov_cb_param_t::ble_mesh_heartbeat_msg_recv (C++ 成员), 355
esp_ble_mesh_prov_cb_param_t::ble_mesh_input_evt_param (C++ 类), 355
esp_ble_mesh_prov_cb_param_t::ble_mesh_input_evt_param::ac (C++ 成员), 356
esp_ble_mesh_prov_cb_param_t::ble_mesh_input_evt_param::si (C++ 成员), 356
esp_ble_mesh_prov_cb_param_t::ble_mesh_input_number_comp_p (C++ 类), 356
esp_ble_mesh_prov_cb_param_t::ble_mesh_input_number_comp_p (C++ 成员), 356
esp_ble_mesh_prov_cb_param_t::ble_mesh_input_string_comp_p (C++ 类), 356
esp_ble_mesh_prov_cb_param_t::ble_mesh_input_string_comp_p (C++ 成员), 356
esp_ble_mesh_prov_cb_param_t::ble_mesh_link_close_evt_para (C++ 类), 356
esp_ble_mesh_prov_cb_param_t::ble_mesh_link_close_evt_para (C++ 成员), 356
esp_ble_mesh_prov_cb_param_t::ble_mesh_link_open_evt_param (C++ 类), 356
esp_ble_mesh_prov_cb_param_t::ble_mesh_link_open_evt_param (C++ 成员), 356
esp_ble_mesh_prov_cb_param_t::ble_mesh_lpn_disable_comp_pa (C++ 类), 356
esp_ble_mesh_prov_cb_param_t::ble_mesh_lpn_disable_comp_pa (C++ 成员), 357
esp_ble_mesh_prov_cb_param_t::ble_mesh_lpn_enable_comp_par (C++ 类), 357
esp_ble_mesh_prov_cb_param_t::ble_mesh_lpn_enable_comp_par (C++ 成员), 357
esp_ble_mesh_prov_cb_param_t::ble_mesh_lpn_friendship_esta (C++ 类), 357
esp_ble_mesh_prov_cb_param_t::ble_mesh_lpn_friendship_esta (C++ 成员), 357
esp_ble_mesh_prov_cb_param_t::ble_mesh_lpn_friendship_term (C++ 类), 357
esp_ble_mesh_prov_cb_param_t::ble_mesh_lpn_friendship_term (C++ 成员), 357

esp_ble_mesh_prov_cb_param_t::ble_mesh_lpn_poll_comp_param (C++ 类), 357
esp_ble_mesh_prov_cb_param_t::ble_mesh_lpn_poll_comp_param::err_code (C++ 成员), 357
esp_ble_mesh_prov_cb_param_t::ble_mesh_model_sub_group_addr_param (C++ 类), 357
esp_ble_mesh_prov_cb_param_t::ble_mesh_model_sub_group_addr_param::company_id (C++ 成员), 358
esp_ble_mesh_prov_cb_param_t::ble_mesh_model_sub_group_addr_param::element_addr (C++ 成员), 358
esp_ble_mesh_prov_cb_param_t::ble_mesh_model_sub_group_addr_param::model_id (C++ 成员), 358
esp_ble_mesh_prov_cb_param_t::ble_mesh_model_sub_group_addr_param::sub_addr (C++ 成员), 358
esp_ble_mesh_prov_cb_param_t::ble_mesh_model_unsub_group_addr_param (C++ 类), 358
esp_ble_mesh_prov_cb_param_t::ble_mesh_model_unsub_group_addr_param::company_id (C++ 成员), 358
esp_ble_mesh_prov_cb_param_t::ble_mesh_model_unsub_group_addr_param::element_addr (C++ 成员), 358
esp_ble_mesh_prov_cb_param_t::ble_mesh_model_unsub_group_addr_param::model_id (C++ 成员), 358
esp_ble_mesh_prov_cb_param_t::ble_mesh_model_unsub_group_addr_param::sub_addr (C++ 成员), 358
esp_ble_mesh_prov_cb_param_t::ble_mesh_node_add_local_app_key_comp_param (C++ 类), 358
esp_ble_mesh_prov_cb_param_t::ble_mesh_node_add_local_app_key_comp_param::app_idx (C++ 成员), 358
esp_ble_mesh_prov_cb_param_t::ble_mesh_node_add_local_app_key_comp_param::err_code (C++ 成员), 358
esp_ble_mesh_prov_cb_param_t::ble_mesh_node_add_local_app_key_comp_param::net_idx (C++ 成员), 358
esp_ble_mesh_prov_cb_param_t::ble_mesh_node_add_local_net_key_comp_param (C++ 类), 359
esp_ble_mesh_prov_cb_param_t::ble_mesh_node_add_local_net_key_comp_param::err_code (C++ 成员), 359
esp_ble_mesh_prov_cb_param_t::ble_mesh_node_bind_local_mod_app_comp_param (C++ 类), 359
esp_ble_mesh_prov_cb_param_t::ble_mesh_node_bind_local_mod_app_comp_param::err_code (C++ 成员), 359
esp_ble_mesh_prov_cb_param_t::ble_mesh_node_bind_local_mod_app_comp_param::model_id (C++ 成员), 359
esp_ble_mesh_prov_cb_param_t::ble_mesh_node_bind_local_mod_app_comp_param::sub_addr (C++ 成员), 359
esp_ble_mesh_prov_cb_param_t::ble_mesh_node_bind_local_mod_app_comp_param::company_id (C++ 成员), 359
esp_ble_mesh_prov_cb_param_t::ble_mesh_node_bind_local_mod_app_comp_param::element_addr (C++ 成员), 359
esp_ble_mesh_prov_cb_param_t::ble_mesh_node_bind_local_mod_app_comp_param::app_idx (C++ 成员), 359
esp_ble_mesh_prov_cb_param_t::ble_mesh_output_num_evt_param (C++ 类), 359
esp_ble_mesh_prov_cb_param_t::ble_mesh_output_num_evt_param::group_addr (C++ 成员), 359
esp_ble_mesh_prov_cb_param_t::ble_mesh_output_num_evt_param::model_id (C++ 成员), 359
esp_ble_mesh_prov_cb_param_t::ble_mesh_output_num_evt_param::num_nums (C++ 成员), 359
esp_ble_mesh_prov_cb_param_t::ble_mesh_output_str_evt_param (C++ 类), 359
esp_ble_mesh_prov_cb_param_t::ble_mesh_output_str_evt_param::company_id (C++ 成员), 359
esp_ble_mesh_prov_cb_param_t::ble_mesh_output_str_evt_param::element_addr (C++ 成员), 360
esp_ble_mesh_prov_cb_param_t::ble_mesh_prov_disable_comp_param (C++ 类), 360
esp_ble_mesh_prov_cb_param_t::ble_mesh_prov_disable_comp_param::err_code (C++ 成员), 360
esp_ble_mesh_prov_cb_param_t::ble_mesh_prov_enable_comp_param (C++ 类), 360
esp_ble_mesh_prov_cb_param_t::ble_mesh_prov_enable_comp_param::err_code (C++ 成员), 360
esp_ble_mesh_prov_cb_param_t::ble_mesh_prov_register_comp_param (C++ 类), 360
esp_ble_mesh_prov_cb_param_t::ble_mesh_prov_register_comp_param::err_code (C++ 成员), 360
esp_ble_mesh_prov_cb_param_t::ble_mesh_provision_complete_param (C++ 类), 360
esp_ble_mesh_prov_cb_param_t::ble_mesh_provision_complete_param::err_code (C++ 成员), 360
esp_ble_mesh_prov_cb_param_t::ble_mesh_provision_complete_param::net_idx (C++ 成员), 360

esp_ble_mesh_prov_cb_param_t::ble_mesh_provisioner_complete_evt_param (C++ 成员), 360
esp_ble_mesh_prov_cb_param_t::ble_mesh_provisioner_delete_comp_param (C++ 成员), 360
esp_ble_mesh_prov_cb_param_t::ble_mesh_provisioner_delete_node_param (C++ 类), 361
esp_ble_mesh_prov_cb_param_t::ble_mesh_provisioner_delete_param (C++ 类), 361
esp_ble_mesh_prov_cb_param_t::ble_mesh_provisioner_delete_param::addr (C++ 成员), 361
esp_ble_mesh_prov_cb_param_t::ble_mesh_provisioner_delete_param::addr_type (C++ 成员), 361
esp_ble_mesh_prov_cb_param_t::ble_mesh_provisioner_delete_param::app_idx (C++ 成员), 361
esp_ble_mesh_prov_cb_param_t::ble_mesh_provisioner_delete_param::net_idx (C++ 成员), 361
esp_ble_mesh_prov_cb_param_t::ble_mesh_provisioner_link_close (C++ 类), 361
esp_ble_mesh_prov_cb_param_t::ble_mesh_provisioner_link_close_param (C++ 类), 361
esp_ble_mesh_prov_cb_param_t::ble_mesh_provisioner_link_close_param::addr (C++ 成员), 361
esp_ble_mesh_prov_cb_param_t::ble_mesh_provisioner_link_close_param::addr_type (C++ 成员), 361
esp_ble_mesh_prov_cb_param_t::ble_mesh_provisioner_link_open (C++ 类), 361
esp_ble_mesh_prov_cb_param_t::ble_mesh_provisioner_link_open_param (C++ 类), 361
esp_ble_mesh_prov_cb_param_t::ble_mesh_provisioner_link_open_param::addr (C++ 成员), 361
esp_ble_mesh_prov_cb_param_t::ble_mesh_provisioner_link_open_param::addr_type (C++ 成员), 361
esp_ble_mesh_prov_cb_param_t::ble_mesh_provisioner_prov_complete (C++ 类), 361
esp_ble_mesh_prov_cb_param_t::ble_mesh_provisioner_prov_complete_param (C++ 类), 361
esp_ble_mesh_prov_cb_param_t::ble_mesh_provisioner_prov_complete_param::addr (C++ 成员), 361
esp_ble_mesh_prov_cb_param_t::ble_mesh_provisioner_prov_complete_param::element_num (C++ 成员), 361
esp_ble_mesh_prov_cb_param_t::ble_mesh_provisioner_prov_complete_param::net_idx (C++ 成员), 362
esp_ble_mesh_prov_cb_param_t::ble_mesh_provisioner_prov_complete_param::provisioned (C++ 成员), 362
esp_ble_mesh_prov_cb_param_t::ble_mesh_provisioner_prov_complete_param::uuid (C++ 成员), 362
esp_ble_mesh_prov_cb_param_t::ble_mesh_provisioner_prov_dev_comp_param (C++ 类), 362
esp_ble_mesh_prov_cb_param_t::ble_mesh_provisioner_prov_dev_comp_param::addr (C++ 成员), 362
esp_ble_mesh_prov_cb_param_t::ble_mesh_provisioner_prov_dev_comp_param::err_code (C++ 成员), 362
esp_ble_mesh_prov_cb_param_t::ble_mesh_provisioner_prov_enable_comp_param (C++ 类), 362
esp_ble_mesh_prov_cb_param_t::ble_mesh_provisioner_prov_enable_comp_param::err_code (C++ 成员), 362
esp_ble_mesh_prov_cb_param_t::ble_mesh_provisioner_recv_unprov_adv_pkt_param (C++ 类), 362
esp_ble_mesh_prov_cb_param_t::ble_mesh_provisioner_recv_unprov_adv_pkt_param::addr (C++ 成员), 362
esp_ble_mesh_prov_cb_param_t::ble_mesh_provisioner_recv_unprov_adv_pkt_param::addr_type (C++ 成员), 362
esp_ble_mesh_prov_cb_param_t::ble_mesh_provisioner_recv_unprov_adv_pkt_param::bearer (C++ 成员), 362
esp_ble_mesh_prov_cb_param_t::ble_mesh_provisioner_recv_unprov_adv_pkt_param::dev_type (C++ 成员), 362
esp_ble_mesh_prov_cb_param_t::ble_mesh_provisioner_recv_unprov_adv_pkt_param::oob_info (C++ 成员), 362
esp_ble_mesh_prov_cb_param_t::ble_mesh_provisioner_recv_unprov_adv_pkt_param::oob_type (C++ 成员), 362
esp_ble_mesh_prov_cb_param_t::ble_mesh_provisioner_recv_unprov_adv_pkt_param::uri_hash (C++ 成员), 362
esp_ble_mesh_prov_cb_param_t::ble_mesh_provisioner_recv_unprov_adv_pkt_param::uuid (C++ 成员), 362
esp_ble_mesh_prov_cb_param_t::ble_mesh_provisioning_enable_comp_param (C++ 类), 362
esp_ble_mesh_prov_cb_param_t::ble_mesh_provisioning_enable_comp_param::err_code (C++ 成员), 362
esp_ble_mesh_prov_cb_param_t::ble_mesh_set_oob_pub_key_comp_param (C++ 类), 362
esp_ble_mesh_prov_cb_param_t::ble_mesh_set_oob_pub_key_comp_param::err_code (C++ 成员), 362
esp_ble_mesh_prov_cb_param_t::ble_mesh_set_unprov_dev_name_comp_param (C++ 类), 362
esp_ble_mesh_prov_cb_param_t::ble_mesh_set_unprov_dev_name_comp_param::err_code (C++ 成员), 362
esp_ble_mesh_prov_cb_param_t::ble_mesh_unprov_beacon_recv (C++ 类), 362
esp_ble_mesh_prov_cb_param_t::ble_mesh_unprov_beacon_recv_param (C++ 类), 362
esp_ble_mesh_prov_cb_param_t::ble_mesh_unprov_beacon_recv_param::oob_info (C++ 成员), 362
esp_ble_mesh_prov_cb_param_t::ble_mesh_unprov_beacon_recv_param::uri_hash (C++ 成员), 362
esp_ble_mesh_prov_cb_param_t::ble_mesh_unprov_beacon_recv_param::uuid (C++ 成员), 362
esp_ble_mesh_prov_cb_param_t::ble_mesh_unprov_dev_add_comp_param (C++ 类), 362
esp_ble_mesh_prov_cb_param_t::ble_mesh_unprov_dev_add_comp_param::addr (C++ 成员), 362
esp_ble_mesh_prov_cb_param_t::ble_mesh_unprov_dev_add_comp_param::err_code (C++ 成员), 362
esp_ble_mesh_prov_cb_param_t::ble_mesh_unprov_dev_add_comp_param::flag (C++ 成员), 362
esp_ble_mesh_prov_cb_param_t::ble_mesh_unprov_dev_add_comp_param::net_idx (C++ 成员), 362
esp_ble_mesh_prov_cb_param_t::ble_mesh_unprov_dev_add_comp_param::oob_type (C++ 成员), 362
esp_ble_mesh_prov_cb_param_t::ble_mesh_unprov_dev_add_comp_param::uuid (C++ 成员), 362
esp_ble_mesh_prov_cb_param_t::ble_mesh_user_input (C++ 类), 362
esp_ble_mesh_prov_cb_param_t::ble_mesh_user_input_param (C++ 类), 362
esp_ble_mesh_prov_cb_param_t::ble_mesh_user_input_param::number_max_size (C++ 成员), 362
esp_ble_mesh_prov_cb_param_t::ble_mesh_user_input_param::string_max_size (C++ 成员), 362
esp_ble_mesh_prov_cb_param_t::ble_mesh_user_node_add_comp_param (C++ 类), 362
esp_ble_mesh_prov_cb_param_t::ble_mesh_user_node_add_comp_param::addr (C++ 成员), 362
esp_ble_mesh_prov_cb_param_t::ble_mesh_user_node_add_comp_param::err_code (C++ 成员), 362
esp_ble_mesh_prov_cb_param_t::ble_mesh_user_node_add_comp_param::net_idx (C++ 成员), 362
esp_ble_mesh_prov_cb_param_t::ble_mesh_user_node_add_comp_param::num_elems (C++ 成员), 362
esp_ble_mesh_prov_cb_param_t::ble_mesh_user_node_add_comp_param::uuid (C++ 成员), 362
esp_ble_mesh_prov_cb_param_t::ble_mesh_user_node_add_comp_param::uuid_match (C++ 成员), 362
esp_ble_mesh_prov_cb_param_t::ble_mesh_user_node_add_comp_param::unicast_addr (C++ 成员), 362
esp_ble_mesh_prov_cb_param_t::ble_mesh_user_node_add_comp_param::unicast_max (C++ 成员), 362
esp_ble_mesh_prov_cb_param_t::ble_mesh_user_node_add_comp_param::unicast_min (C++ 成员), 362
esp_ble_mesh_prov_cb_param_t::ble_mesh_user_node_add_comp_param::user_data (C++ 成员), 362
esp_ble_mesh_prov_cb_param_t::ble_mesh_user_node_add_comp_param::user_data_len (C++ 成员), 362
esp_ble_mesh_prov_cb_param_t::ble_mesh_user_node_add_comp_param::user_data_max_len (C++ 成员), 362
esp_ble_mesh_prov_cb_param_t::ble_mesh_user_node_add_comp_param::user_data_min_len (C++ 成员), 362
esp_ble_mesh_prov_cb_param_t::ble_mesh_user_node_add_comp_param::user_data_pad (C++ 成员), 362
esp_ble_mesh_prov_cb_param_t::ble_mesh_user_node_add_comp_param::user_data_total_len (C++ 成员), 362
esp_ble_mesh_prov_cb_param_t::ble_mesh_user_node_add_comp_param::user_data_value (C++ 成员), 362
esp_ble_mesh_prov_cb_param_t::ble_mesh_user_node_add_comp_param::user_data_value_len (C++ 成员), 362
esp_ble_mesh_prov_cb_param_t::ble_mesh_user_node_add_comp_param::user_data_value_max_len (C++ 成员), 362
esp_ble_mesh_prov_cb_param_t::ble_mesh_user_node_add_comp_param::user_data_value_min_len (C++ 成员), 362
esp_ble_mesh_prov_cb_param_t::ble_mesh_user_node_add_comp_param::user_data_value_pad (C++ 成员), 362
esp_ble_mesh_prov_cb_param_t::ble_mesh_user_node_add_comp_param::user_data_value_total_len (C++ 成员), 362
esp_ble_mesh_prov_cb_param_t::ble_mesh_user_node_add_comp_param::user_data_value_value (C++ 成员), 362
esp_ble_mesh_prov_cb_param_t::ble_mesh_user_node_add_comp_param::user_data_value_value_len (C++ 成员), 362
esp_ble_mesh_prov_cb_param_t::ble_mesh_user_node_add_comp_param::user_data_value_value_max_len (C++ 成员), 362
esp_ble_mesh_prov_cb_param_t::ble_mesh_user_node_add_comp_param::user_data_value_value_min_len (C++ 成员), 362
esp_ble_mesh_prov_cb_param_t::ble_mesh_user_node_add_comp_param::user_data_value_value_pad (C++ 成员), 362
esp_ble_mesh_prov_cb_param_t::ble_mesh_user_node_add_comp_param::user_data_value_value_total_len (C++ 成员), 362
esp_ble_mesh_prov_cb_param_t::ble_mesh_user_node_add_comp_param::user_data_value_value_value (C++ 成员), 362
esp_ble_mesh_prov_cb_param_t::ble_mesh_user_node_add_comp_param::user_data_value_value_value_len (C++ 成员), 362
esp_ble_mesh_prov_cb_param_t::ble_mesh_user_node_add_comp_param::user_data_value_value_value_max_len (C++ 成员), 362
esp_ble_mesh_prov_cb_param_t::ble_mesh_user_node_add_comp_param::user_data_value_value_value_min_len (C++ 成员), 362
esp_ble_mesh_prov_cb_param_t::ble_mesh_user_node_add_comp_param::user_data_value_value_value_pad (C++ 成员), 362
esp_ble_mesh_prov_cb_param_t::ble_mesh_user_node_add_comp_param::user_data_value_value_value_total_len (C++ 成员), 362
esp_ble_mesh_prov_cb_param_t::ble_mesh_user_node_add_comp_param::user_data_value_value_value_value (C++ 成员), 362
esp_ble_mesh_prov_cb_param_t::ble_mesh_user_node_add_comp_param::user_data_value_value_value_value_len (C++ 成员), 362
esp_ble_mesh_prov_cb_param_t::ble_mesh_user_node_add_comp_param::user_data_value_value_value_value_max_len (C++ 成员), 362
esp_ble_mesh_prov_cb_param_t::ble_mesh_user_node_add_comp_param::user_data_value_value_value_value_min_len (C++ 成员), 362
esp_ble_mesh_prov_cb_param_t::ble_mesh_user_node_add_comp_param::user_data_value_value_value_value_pad (C++ 成员), 362
esp_ble_mesh_prov_cb_param_t::ble_mesh_user_node_add_comp_param::user_data_value_value_value_value_total_len (C++ 成员), 362
esp_ble_mesh_prov_cb_param_t::ble_mesh_user_node_add_comp_param::user_data_value_value_value_value_value (C++ 成员), 362
esp_ble_mesh_prov_cb_param_t::ble_mesh_user_node_add_comp_param::user_data_value_value_value_value_value_len (C++ 成员), 362
esp_ble_mesh_prov_cb_param_t::ble_mesh_user_node_add_comp_param::user_data_value_value_value_value_value_max_len (C++ 成员), 362
esp_ble_mesh_prov_cb_param_t::ble_mesh_user_node_add_comp_param::user_data_value_value_value_value_value_min_len (C++ 成员), 362
esp_ble_mesh_prov_cb_param_t::ble_mesh_user_node_add_comp_param::user_data_value_value_value_value_value_pad (C++ 成员), 362
esp_ble_mesh_prov_cb_param_t::ble_mesh_user_node_add_comp_param::user_data_value_value_value_value_value_total_len (C++ 成员), 362
esp_ble_mesh_prov_cb_param_t::ble_mesh_user_node_add_comp_param::user_data_value_value_value_value_value_value (C++ 成员), 362
esp_ble_mesh_prov_cb_param_t::ble_mesh_user_node_add_comp_param::user_data_value_value_value_value_value_value_len (C++ 成员), 362
esp_ble_mesh_prov_cb_param_t::ble_mesh_user_node_add_comp_param::user_data_value_value_value_value_value_value_max_len (C++ 成员), 362
esp_ble_mesh_prov_cb_param_t::ble_mesh_user_node_add_comp_param::user_data_value_value_value_value_value_value_min_len (C++ 成员), 362
esp_ble_mesh_prov_cb_param_t::ble_mesh_user_node_add_comp_param::user_data_value_value_value_value_value_value_pad (C++ 成员), 362
esp_ble_mesh_prov_cb_param_t::ble_mesh_user_node_add_comp_param::user_data_value_value_value_value_value_value_total_len (C++ 成员), 362
esp_ble_mesh_prov_cb_param_t::ble_mesh_user_node_add_comp_param::user_data_value_value_value_value_value_value_value (C++ 成员), 362
esp_ble_mesh_prov_cb_param_t::ble_mesh_user_node_add_comp_param::user_data_value_value_value_value_value_value_value_len (C++ 成员), 362
esp_ble_mesh_prov_cb_param_t::ble_mesh_user_node_add_comp_param::user_data_value_value_value_value_value_value_value_max_len (C++ 成员), 362
esp_ble_mesh_prov_cb_param_t::ble_mesh_user_node_add_comp_param::user_data_value_value_value_value_value_value_value_min_len (C++ 成员), 362
esp_ble_mesh_prov_cb_param_t::ble_mesh_user_node_add_comp_param::user_data_value_value_value_value_value_value_value_pad (C++ 成员), 362
esp_ble_mesh_prov_cb_param_t::ble_mesh_user_node_add_comp_param::user_data_value_value_value_value_value_value_value_total_len (C++ 成员), 362
esp_ble_mesh_prov_cb_param_t::ble_mesh_user_node_add_comp_param::user_data_value_value_value_value_value_value_value_value (C++ 成员), 362
esp_ble_mesh_prov_cb_param_t::ble_mesh_user_node_add_comp_param::user_data_value_value_value_value_value_value_value_value_len (C++ 成员), 362
esp_ble_mesh_prov_cb_param_t::ble_mesh_user_node_add_comp_param::user_data_value_value_value_value_value_value_value_value_max_len (C++ 成员), 362
esp_ble_mesh_prov_cb_param_t::ble_mesh_user_node_add_comp_param::user_data_value_value_value_value_value_value_value_value_min_len (C++ 成员), 362
esp_ble_mesh_prov_cb_param_t::ble_mesh_user_node_add_comp_param::user_data_value_value_value_value_value_value_value_value_pad (C++ 成员), 362
esp_ble_mesh_prov_cb_param_t::ble_mesh_user_node_add_comp_param::user_data_value_value_value_value_value_value_value_value_total_len (C++ 成员), 362
esp_ble_mesh_prov_cb_param_t::ble_mesh_user_node_add_comp_param::user_data_value_value_value_value_value_value_value_value_value (C++ 成员), 362
esp_ble_mesh_prov_cb_param_t::ble_mesh_user_node_add_comp_param::user_data_value_value_value_value_value_value_value_value_value_len (C++ 成员), 362
esp_ble_mesh_prov_cb_param_t::ble_mesh_user_node_add_comp_param::user_data_value_value_value_value_value_value_value_value_value_max_len (C++ 成员), 362
esp_ble_mesh_prov_cb_param_t::ble_mesh_user_node_add_comp_param::user_data_value_value_value_value_value_value_value_value_value_min_len (C++ 成员), 362
esp_ble_mesh_prov_cb_param_t::ble_mesh_user_node_add_comp_param::user_data_value_value_value_value_value_value_value_value_value_pad (C++ 成员), 362
esp_ble_mesh_prov_cb_param_t::ble_mesh_user_node_add_comp_param::user_data_value_value_value_value_value_value_value_value_value_total_len (C++ 成员), 362
esp_ble_mesh_prov_cb_param_t::ble_mesh_user_node_add_comp_param::user_data_value_value_value_value_value_value_value_value_value_value (C++ 成员), 362
esp_ble_mesh_prov_cb_param_t::ble_mesh_user_node_add_comp_param::user_data_value_value_value_value_value_value_value_value_value_value_len (C++ 成员), 362
esp_ble_mesh_prov_cb_param_t::ble_mesh_user_node_add_comp_param::user_data_value_value_value_value_value_value_value_value_value_value_max_len (C++ 成员), 362
esp_ble_mesh_prov_cb_param_t::ble_mesh_user_node_add_comp_param::user_data_value_value_value_value_value_value_value_value_value_value_min_len (C++ 成员), 362
esp_ble_mesh_prov_cb_param_t::ble_mesh_user_node_add_comp_param::user_data_value_value_value_value_value_value_value_value_value_value_pad (C++ 成员), 362
esp_ble_mesh_prov_cb_param_t::ble_mesh_user_node_add_comp_param::user_data_value_value_value_value_value_value_value_value_value_value_total_len (C++ 成员), 362
esp_ble_mesh_prov_cb_param_t::ble_mesh_user_node_add_comp_param::user_data_value_value_value_value_value_value_value_value_value_value_value (C++ 成员), 362
esp_ble_mesh_prov_cb_param_t::ble_mesh_user_node_add_comp_param::user_data_value_value_value_value_value_value_value_value_value_value_value_len (C++ 成员), 362
esp_ble_mesh_prov_cb_param_t::ble_mesh_user_node_add_comp_param::user_data_value_value_value_value_value_value_value_value_value_value_value_max_len (C++ 成员), 362
esp_ble_mesh_prov_cb_param_t::ble_mesh_user_node_add_comp_param::user_data_value_value_value_value_value_value_value_value_value_value_value_min_len (C++ 成员), 362
esp_ble_mesh_prov_cb_param_t::ble_mesh_user_node_add_comp_param::user_data_value_value_value_value_value_value_value_value_value_value_value_pad (C++ 成员), 362
esp_ble_mesh_prov_cb_param_t::ble_mesh_user_node_add_comp_param::user_data_value_value_value_value_value_value_value_value_value_value_value_total_len (C++ 成员), 362
esp_ble_mesh_prov_cb_param_t::ble_mesh_user_node_add_comp_param::user_data_value_value_value_value_value_value_value_value_value_value_value_value (C++ 成员), 362
esp_ble_mesh_prov_cb_param_t::ble_mesh_user_node_add_comp_param::user_data_value_value_value_value_value_value_value_value_value_value_value_value_len (C++ 成员), 362
esp_ble_mesh_prov_cb_param_t::ble_mesh_user_node_add_comp_param::user_data_value_value_value_value_value_value_value_value_value_value_value_value_max_len (C++ 成员), 362
esp_ble_mesh_prov_cb_param_t::ble_mesh_user_node_add_comp_param::user_data_value_value_value_value_value_value_value_value_value_value_value_value_min_len (C++ 成员), 362
esp_ble_mesh_prov_cb_param_t::ble_mesh_user_node_add_comp_param::user_data_value_value_value_value_value_value_value_value_value_value_value_value_pad (C++ 成员), 362
esp_ble_mesh_prov_cb_param_t::ble_mesh_user_node_add_comp_param::user_data_value_value_value_value_value_value_value_value_value_value_value_value_total_len (C++ 成员), 362
esp_ble_mesh_prov_cb_param_t::ble_mesh_user_node_add_comp_param::user_data_value_value_value_value_value_value_value_value_value_value_value_value_value (C++ 成员), 362
esp_ble_mesh_prov_cb_param_t::ble_mesh_user_node_add_comp_param::user_data_value_value_value_value_value_value_value_value_value_value_value_value_value_len (C++ 成员), 362
esp_ble_mesh_prov_cb_param_t::ble_mesh_user_node_add_comp_param::user_data_value_value_value_value_value_value_value_value_value_value_value_value_value_max_len (C++ 成员), 362
esp_ble_mesh_prov_cb_param_t::ble_mesh_user_node_add_comp_param::user_data_value_value_value_value_value_value_value_value_value_value_value_value_value_min_len (C++ 成员), 362
esp_ble_mesh_prov_cb_param_t::ble_mesh_user_node_add_comp_param::user_data_value_value_value_value_value_value_value_value_value_value_value_value_value_pad (C++ 成员), 362
esp_ble_mesh_prov_cb_param_t::ble_mesh_user_node_add_comp_param::user_data_value_value_value_value_value_value_value_value_value_value_value_value_value_total_len (C++ 成员), 362
esp_ble_mesh_prov_cb_param_t::ble_mesh_user_node_add_comp_param::user_data_value_value_value_value_value_value_value_value_value_value_value_value_value_value (C++ 成员), 362
esp_ble_mesh_prov_cb_param_t::ble_mesh_user_node_add_comp_param::user_data_value_value_value_value_value_value_value_value_value_value_value_value_value_value_len (C++ 成员), 362
esp_ble_mesh_prov_cb_param_t::ble_mesh_user_node_add_comp_param::user_data_value_value_value_value_value_value_value_value_value_value_value_value_value_value_max_len (C++ 成员), 362
esp_ble_mesh_prov_cb_param_t::ble_mesh_user_node_add_comp_param::user_data_value_value_value_value_value_value_value_value_value_value_value_value_value_value_min_len (C++ 成员), 362
esp_ble_mesh_prov_cb_param_t::ble_mesh_user_node_add_comp_param::user_data_value_value_value_value_value_value_value_value_value_value_value_value_value_value_pad (C++ 成员), 362
esp_ble_mesh_prov_cb_param_t::ble_mesh_user_node_add_comp_param::user_data_value_value_value_value_value_value_value_value_value_value_value_value_value_value_total_len (C++ 成员), 362
esp_ble_mesh_prov_cb_param_t::ble_mesh_user_node_add_comp_param::user_data_value_value_value_value_value_value_value_value_value_value_value_value_value_value_value (C++ 成员), 362
esp_ble_mesh_prov_cb_param_t::ble_mesh_user_node_add_comp_param::user_data_value_value_value_value_value_value_value_value_value_value_value_value_value_value_value_len (C++ 成员), 362
esp_ble_mesh_prov_cb_param_t::ble_mesh_user_node_add_comp_param::user_data_value_value_value_value_value_value_value_value_value_value_value_value_value_value_value_max_len (C++ 成员), 362
esp_ble_mesh_prov_cb_param_t::ble_mesh_user_node_add_comp_param::user_data_value_value_value_value_value_value_value_value_value_value_value_value_value_value_value_min_len (C++ 成员), 362
esp_ble_mesh_prov_cb_param_t::ble_mesh_user_node_add_comp_param::user_data_value_value_value_value_value_value_value_value_value_value_value_value_value_value_value_pad (C++ 成员), 362
esp_ble_mesh_prov_cb_param_t::ble_mesh_user_node_add_comp_param::user_data_value_value_value_value_value_value_value_value_value_value_value_value_value_value_value_total_len (C++ 成员), 362
esp_ble_mesh_prov_cb_param_t::ble_mesh_user_node_add_comp_param::user_data_value_value_value_value_value_value_value_value_value_value_value_value_value_value_value_value (C++ 成员), 362
esp_ble_mesh_prov_cb_param_t::ble_mesh_user_node_add_comp_param::user_data_value_value_value_value_value_value_value_value_value_value_value_value_value_value_value_value_len (C++ 成员), 362
esp_ble_mesh_prov_cb_param_t::ble_mesh_user_node_add_comp_param::user_data_value_value_value_value_value_value_value_value_value_value_value_value_value_value_value_value_max_len (C++ 成员), 362
esp_ble_mesh_prov_cb_param_t::ble_mesh_user_node_add_comp_param::user_data_value_value_value_value_value_value_value_value_value_value_value_value_value_value_value_value_min_len (C++ 成员), 362
esp_ble_mesh_prov_cb_param_t::ble_mesh_user_node_add_comp_param::user_data_value_value_value_value_value_value_value_value_value_value_value_value_value_value_value_value_pad (C++ 成员), 362
esp_ble_mesh_prov_cb_param_t::ble_mesh_user_node_add_comp_param::user_data_value_value_value_value_value_value_value_value_value_value_value_value_value_value_value_value_total_len (C++ 成员), 362
esp_ble_mesh_prov_cb_param_t::ble_mesh_user_node_add_comp_param::user_data_value_value_value_value_value_value_value_value_value_value_value_value_value_value_value_value_value (C++ 成员), 362
esp_ble_mesh_prov_cb_param_t::ble_mesh_user_node_add_comp_param::user_data_value_value_value_value_value_value_value_value_value_value_value_value_value_value_value_value_value_len (C++ 成员), 362
esp_ble_mesh_prov_cb_param_t::ble_mesh_user_node_add_comp_param::user_data_value_value_value_value_value_value_value_value_value_value_value_value_value_value_value_value_value_max_len (C++ 成员), 362
esp_ble_mesh_prov_cb_param_t::ble_mesh_user_node_add_comp_param::user_data_value_value_value_value_value_value_value_value_value_value_value_value_value_value_value_value_value_min_len (C++ 成员), 362
esp_ble_mesh_prov_cb_param_t::ble_mesh_user_node_add_comp_param::user_data_value_value_value_value_value_value_value_value_value_value_value_value_value_value_value_value_value_pad (C++ 成员), 362
esp_ble_mesh_prov_cb_param_t::ble_mesh_user_node_add_comp_param::user_data_value_value_value_value_value_value_value_value_value_value_value_value_value_value_value_value_value_total_len (C++ 成员), 362
esp_ble_mesh_prov_cb_param_t::ble_mesh_user_node_add_comp_param::user_data_value_value_value_value_value_value_value_value_value_value_value_value_value_value_value_value_value_value (C++ 成员), 362
esp_ble_mesh_prov_cb_param_t::ble_mesh_user_node_add_comp_param::user_data_value_value_value_value_value_value_value_value_value_value_value_value_value_value_value_value_value_value_len (C++ 成员), 362
esp_ble_mesh_prov_cb_param_t::ble_mesh_user_node_add_comp_param::user_data_value_value_value_value_value_value_value_value_value_value_value_value_value_value_value_value_value_value_max_len (C++ 成员), 362
esp_ble_mesh_prov_cb_param_t::ble_mesh_user_node_add_comp_param::user_data_value_value_value_value_value_value_value_value_value_value_value_value_value_value_value_value_value_value_min_len (C++ 成员), 362
esp_ble_mesh_prov_cb_param_t::ble_mesh_user_node_add_comp_param::user_data_value_value_value_value_value_value_value_value_value_value_value_value_value_value_value_value_value_value_pad (C++ 成员), 362
esp_ble_mesh_prov_cb_param_t::ble_mesh_user_node_add_comp_param::user_data_value_value_value_value_value_value_value_value_value_value_value_value_value_value_value_value_value_value_total_len (C++ 成员), 362
esp_ble_mesh_prov_cb_param_t::ble_mesh_user_node_add_comp_param::user_data_value_value_value_value_value_value_value_value_value_value_value_value_value_value_value_value_value_value_value (C++ 成员), 362
esp_ble_mesh_prov_cb_param_t::ble_mesh_user_node_add_comp_param::user_data_value_value_value_value_value_value_value_value_value_value_value_value_value_value_value_value_value_value_value_len (C++ 成员), 362
esp_ble_mesh_prov_cb_param_t::ble_mesh_user_node_add_comp_param::user_data_value_value_value_value_value_value_value_value_value_value_value_value_value_value_value_value_value_value_value_max_len (C++ 成员), 362
esp_ble_mesh_prov_cb_param_t::ble_mesh_user_node_add_comp_param::user_data_value_value_value_value_value_value_value_value_value_value_value_value_value_value_value_value_value_value_value_min_len (C++ 成员), 362
esp_ble_mesh_prov_cb_param_t::ble_mesh_user_node_add_comp_param::user_data_value_value_value_value_value_value_value_value_value_value_value_value_value_value_value_value_value_value_value_pad (C++ 成员), 362
esp_ble_mesh_prov_cb_param_t::ble_mesh_user_node_add_comp_param::user_data_value_value_value_value_value_value_value_value_value_value_value_value_value_value_value_value_value_value_value_total_len (C++ 成员), 362
esp_ble_mesh_prov_cb_param_t::ble_mesh_user_node_add_comp_param::user_data_value (C++ 成员), 362
esp_ble_mesh_prov_cb_param_t::ble_mesh_user_node_add_comp_param::user_data_value_len (C++ 成员), 362
esp_ble_mesh_prov_cb_param_t::ble_mesh_user_node_add_comp_param::user_data_value_max_len (C++ 成员), 362
esp_ble_mesh_prov_cb_param_t::ble_mesh_user_node_add_comp_param::user_data_value_min_len (C++ 成员), 362
esp_ble_mesh_prov_cb_param_t::ble_mesh_user_node_add_comp_param::user_data_value_pad (C++ 成员), 362
esp_ble_mesh_prov_cb_param_t::ble_mesh_user_node_add_comp_param::user_data_value_total_len (C++ 成员), 362
esp_ble_mesh_prov_cb_param_t::ble_mesh_user_node_add_comp_param::user_data_value (C++ 成员), 362
esp_ble_mesh_prov_cb_param_t::ble_mesh_user_node_add_comp_param::user_data_value_len (C++ 成员), 362
esp_ble_mesh_prov_cb_param_t::ble_mesh_user_node_add_comp_param::user_data_value_max_len (C++ 成员), 362
esp_ble_mesh_prov_cb_param_t::ble_mesh_user_node_add_comp_param::user_data_value_min_len (C++ 成员), 362
esp_ble_mesh_prov_cb_param_t::ble_mesh_user_node_add_comp_param::user_data_value_pad (C++ 成员), 362
esp_ble_mesh_prov_cb_param_t::ble_mesh_user_node_add_comp_param::user_data_value_total_len (C++ 成员), 362
esp_ble_mesh_prov_cb_param_t::ble_mesh_user_node_add_comp_param::user_data_value (C++ 成员), 362
esp_ble_mesh_prov_cb_param_t::ble_mesh_user_node_add_comp_param::user_data_value_len (C++ 成员), 362
esp_ble_mesh_prov_cb_param_t::ble_mesh_user_node_add_comp_param::user_data_value_max_len (C++ 成员), 362
esp_ble_mesh_prov_cb_param_t::ble_mesh_user_node_add_comp_param::user_data_value_min_len (C++ 成员), 362
esp_ble_mesh_prov_cb_param_t::ble_mesh_user_node_add_comp_param::user_data_value_pad (C++ 成员), 362
esp_ble_mesh_prov_cb_param_t::ble_mesh_user_node_add_comp_param::user_data_value_total_len (C++ 成员), 362
esp_ble_mesh_prov_cb_param_t::ble_mesh_user_node_add_comp_param::user_data_value (C++ 成员), 362
esp_ble_mesh_prov_cb_param_t::ble_mesh_user_node_add_comp_param::user_data_value_len (C++ 成员), 362
esp_ble_mesh_prov_cb_param_t::ble_mesh_user_node_add_comp_param::user_data_value_max_len (C++ 成员), 362
esp_ble_mesh_prov_cb_param_t::ble_mesh_user_node_add_comp_param::user_data_value_min_len (C++ 成员), 362
esp_ble_mesh_prov_cb_param_t::ble_mesh_user_node_add_comp_param::user_data_value_pad (C++ 成员), 362
esp_ble_mesh_prov_cb_param_t::ble_mesh_user_node_add_comp_param::user_data_value_total_len (C++ 成员), 362
esp_ble_mesh_prov_cb_param_t::ble_mesh_user_node_add_comp_param::user_data_value (C++ 成员), 362
esp_ble_mesh_prov_cb_param_t::ble_mesh_user_node_add_comp_param::user_data_value_len (C++ 成员), 362
esp_ble_mesh_prov_cb_param_t::ble_mesh_user_node_add_comp_param::user_data_value_max_len (C++ 成员), 362
esp_ble_mesh_prov_cb_param_t::ble_mesh_user_node_add_comp_param::user_data_value_min_len (C++ 成员), 362
esp_ble_mesh_prov_cb_param_t::ble_mesh_user_node_add_comp_param::user_data_value_pad (C++ 成员), 362
esp_ble_mesh_prov_cb_param_t::ble_mesh_user_node_add_comp_param::user_data_value_total_len (C++ 成员), 362
esp_ble_mesh_prov_cb_param_t::ble_mesh_user_node_add_comp_param::user_data_value (C++ 成员), 362
esp_ble_mesh_prov_cb_param_t::ble_mesh_user_node_add_comp_param::user_data_value_len (C++ 成员), 362
esp_ble_mesh_prov_cb_param_t::ble_mesh_user_node_add_comp_param::user_data_value_max_len (C++ 成员), 362
esp_ble_mesh_prov_cb_param_t::ble_mesh_user_node_add_comp_param::user_data_value_min_len (C++ 成员), 362
esp_ble_mesh_prov_cb_param

esp_ble_mesh_prov_cb_param_t::ble_mesh_provisioner_prov_enable_comp (C++ 成员), 364
esp_ble_mesh_prov_cb_param_t::ble_mesh_provisioner_prov_read_oob_pub_key_comp (C++ 成员), 365
esp_ble_mesh_prov_cb_param_t::ble_mesh_provisioner_recv_unprov_adv_pkt (C++ 类), 364
esp_ble_mesh_prov_cb_param_t::ble_mesh_provisioner_recv_unprov_adv_pkt_param (C++ 类), 365
esp_ble_mesh_prov_cb_param_t::ble_mesh_provisioner_recv_unprov_adv_pkt_param::addr (C++ 成员), 364
esp_ble_mesh_prov_cb_param_t::ble_mesh_provisioner_recv_unprov_adv_pkt_param::adv_type (C++ 成员), 366
esp_ble_mesh_prov_cb_param_t::ble_mesh_provisioner_recv_unprov_adv_pkt_param::bearer (C++ 成员), 364
esp_ble_mesh_prov_cb_param_t::ble_mesh_provisioner_recv_unprov_adv_pkt_param::link_idx (C++ 成员), 366
esp_ble_mesh_prov_cb_param_t::ble_mesh_provisioner_recv_unprov_adv_pkt_param::method (C++ 成员), 364
esp_ble_mesh_prov_cb_param_t::ble_mesh_provisioner_recv_unprov_adv_pkt_param::oob_info (C++ 成员), 366
esp_ble_mesh_prov_cb_param_t::ble_mesh_provisioner_recv_unprov_adv_pkt_param::oob_type (C++ 成员), 364
esp_ble_mesh_prov_cb_param_t::ble_mesh_provisioner_recv_unprov_adv_pkt_param::output_size (C++ 成员), 364
esp_ble_mesh_prov_cb_param_t::ble_mesh_provisioner_recv_unprov_adv_pkt_param::uri_hash (C++ 成员), 366
esp_ble_mesh_prov_cb_param_t::ble_mesh_provisioner_set_dev_uuid_match_comp_param (C++ 类), 364
esp_ble_mesh_prov_cb_param_t::ble_mesh_provisioner_set_dev_uuid_match_comp_param::dev_uuid (C++ 成员), 366
esp_ble_mesh_prov_cb_param_t::ble_mesh_provisioner_set_dev_uuid_match_comp_param::len (C++ 成员), 364
esp_ble_mesh_prov_cb_param_t::ble_mesh_provisioner_set_dev_uuid_match_comp_param::offset (C++ 成员), 366
esp_ble_mesh_prov_cb_param_t::ble_mesh_provisioner_set_node_name_comp_param (C++ 类), 364
esp_ble_mesh_prov_cb_param_t::ble_mesh_provisioner_set_node_name_comp_param::index (C++ 成员), 366
esp_ble_mesh_prov_cb_param_t::ble_mesh_provisioner_set_node_name_comp_param::name (C++ 成员), 365
esp_ble_mesh_prov_cb_param_t::ble_mesh_provisioner_set_node_name_comp_param::status (C++ 成员), 366
esp_ble_mesh_prov_cb_param_t::ble_mesh_provisioner_set_prov_data_info_comp_param (C++ 类), 365
esp_ble_mesh_prov_cb_param_t::ble_mesh_provisioner_set_prov_data_info_comp_param::flag (C++ 成员), 366
esp_ble_mesh_prov_cb_param_t::ble_mesh_provisioner_set_prov_data_info_comp_param::status (C++ 成员), 365
esp_ble_mesh_prov_cb_param_t::ble_mesh_provisioner_set_prov_data_info_comp_param::status_flag (C++ 成员), 367
esp_ble_mesh_prov_cb_param_t::ble_mesh_provisioner_set_prov_data_info_comp_param::status_value (C++ 类), 367
esp_ble_mesh_prov_cb_param_t::ble_mesh_provisioner_set_prov_data_info_comp_param::value (C++ 成员), 367
esp_ble_mesh_prov_cb_param_t::ble_mesh_provisioner_set_static_oob_pub_key_comp_param (C++ 类), 367
esp_ble_mesh_prov_cb_param_t::ble_mesh_provisioner_set_static_oob_pub_key_comp_param::provisioner (C++ 成员), 367
esp_ble_mesh_prov_cb_param_t::ble_mesh_provisioner_store_node_comp_data_param (C++ 类), 367

esp_ble_mesh_prov_cb_param_t::ble_mesh_provisioner_store_node_comp_data_comp_param::addr (*C++* 成员), 367

esp_ble_mesh_prov_cb_param_t::ble_mesh_provisioner_store_node_comp_data_comp_param::err_code (*C++* 成员), 367

esp_ble_mesh_prov_cb_param_t::ble_mesh_provisioner_update_local_app_key_comp_param (*C++* 类), 367

esp_ble_mesh_prov_cb_param_t::ble_mesh_provisioner_update_local_app_key_comp_param::app_idx (*C++* 成员), 367

esp_ble_mesh_prov_cb_param_t::ble_mesh_provisioner_update_local_app_key_comp_param::err_code (*C++* 成员), 367

esp_ble_mesh_prov_cb_param_t::ble_mesh_provisioner_update_local_app_key_comp_param::net_idx (*C++* 成员), 367

esp_ble_mesh_prov_cb_param_t::ble_mesh_provisioner_update_local_net_key_comp_param (*C++* 类), 367

esp_ble_mesh_prov_cb_param_t::ble_mesh_provisioner_update_local_net_key_comp_param::err_code (*C++* 成员), 368

esp_ble_mesh_prov_cb_param_t::ble_mesh_provisioner_update_local_net_key_comp_param::net_idx (*C++* 成员), 368

esp_ble_mesh_prov_cb_param_t::ble_mesh_proxy_client_add_filter_addr_comp_param (*C++* 类), 368

esp_ble_mesh_prov_cb_param_t::ble_mesh_proxy_client_add_filter_addr_comp_param::conn_handle (*C++* 成员), 368

esp_ble_mesh_prov_cb_param_t::ble_mesh_proxy_client_add_filter_addr_comp_param::err_code (*C++* 成员), 368

esp_ble_mesh_prov_cb_param_t::ble_mesh_proxy_client_add_filter_addr_comp_param::net_idx (*C++* 成员), 368

esp_ble_mesh_prov_cb_param_t::ble_mesh_proxy_client_connect_comp_param (*C++* 类), 368

esp_ble_mesh_prov_cb_param_t::ble_mesh_proxy_client_connect_comp_param::addr (*C++* 成员), 368

esp_ble_mesh_prov_cb_param_t::ble_mesh_proxy_client_connect_comp_param::addr_type (*C++* 成员), 368

esp_ble_mesh_prov_cb_param_t::ble_mesh_proxy_client_connect_comp_param::err_code (*C++* 成员), 368

esp_ble_mesh_prov_cb_param_t::ble_mesh_proxy_client_connect_comp_param::net_idx (*C++* 成员), 368

esp_ble_mesh_prov_cb_param_t::ble_mesh_proxy_client_connected_param (*C++* 类), 368

esp_ble_mesh_prov_cb_param_t::ble_mesh_proxy_client_connected_param::addr (*C++* 成员), 369

esp_ble_mesh_prov_cb_param_t::ble_mesh_proxy_client_connected_param::addr_type (*C++* 成员), 369

esp_ble_mesh_prov_cb_param_t::ble_mesh_proxy_client_connec (*C++* 成员), 369

esp_ble_mesh_prov_cb_param_t::ble_mesh_proxy_client_connec (*C++* 成员), 369

esp_ble_mesh_prov_cb_param_t::ble_mesh_proxy_client_discon (*C++* 类), 369

esp_ble_mesh_prov_cb_param_t::ble_mesh_proxy_client_discon (*C++* 成员), 369

esp_ble_mesh_prov_cb_param_t::ble_mesh_proxy_client_discon (*C++* 成员), 369

esp_ble_mesh_prov_cb_param_t::ble_mesh_proxy_client_discon (*C++* 类), 369

esp_ble_mesh_prov_cb_param_t::ble_mesh_proxy_client_discon (*C++* 成员), 369

esp_ble_mesh_prov_cb_param_t::ble_mesh_proxy_client_discon (*C++* 成员), 369

esp_ble_mesh_prov_cb_param_t::ble_mesh_proxy_client_discon (*C++* 成员), 369

esp_ble_mesh_prov_cb_param_t::ble_mesh_proxy_client_discon (*C++* 成员), 369

esp_ble_mesh_prov_cb_param_t::ble_mesh_proxy_client_discon (*C++* 成员), 369

esp_ble_mesh_prov_cb_param_t::ble_mesh_proxy_client_recv_a (*C++* 类), 369

esp_ble_mesh_prov_cb_param_t::ble_mesh_proxy_client_recv_a (*C++* 成员), 370

esp_ble_mesh_prov_cb_param_t::ble_mesh_proxy_client_recv_a (*C++* 成员), 370

esp_ble_mesh_prov_cb_param_t::ble_mesh_proxy_client_recv_a (*C++* 成员), 370

esp_ble_mesh_prov_cb_param_t::ble_mesh_proxy_client_recv_a (*C++* 成员), 370

esp_ble_mesh_prov_cb_param_t::ble_mesh_proxy_client_recv_f (*C++* 类), 370

esp_ble_mesh_prov_cb_param_t::ble_mesh_proxy_client_recv_f (*C++* 成员), 370

esp_ble_mesh_prov_cb_param_t::ble_mesh_proxy_client_recv_f (*C++* 成员), 370

esp_ble_mesh_prov_cb_param_t::ble_mesh_proxy_client_recv_f (*C++* 成员), 370

esp_ble_mesh_prov_cb_param_t::ble_mesh_proxy_client_recv_f (*C++* 成员), 370

esp_ble_mesh_prov_cb_param_t::ble_mesh_proxy_client_recv_filter_status_param::net_idx (C++ 成员), 370

esp_ble_mesh_prov_cb_param_t::ble_mesh_proxy_client_recv_filter_status_param::server_addr (C++ 成员), 370

esp_ble_mesh_prov_cb_param_t::ble_mesh_proxy_client_remove_filter_addr_comp_param (C++ 类), 370

esp_ble_mesh_prov_cb_param_t::ble_mesh_proxy_client_remove_filter_addr_comp_param::conn_handle (C++ 成员), 370

esp_ble_mesh_prov_cb_param_t::ble_mesh_proxy_client_remove_filter_addr_comp_param::err_code (C++ 成员), 370

esp_ble_mesh_prov_cb_param_t::ble_mesh_proxy_client_remove_filter_addr_comp_param::net_idx (C++ 成员), 370

esp_ble_mesh_prov_cb_param_t::ble_mesh_proxy_client_set_filter_type_comp_param (C++ 类), 371

esp_ble_mesh_prov_cb_param_t::ble_mesh_proxy_client_set_filter_type_comp_param::conn_handle (C++ 成员), 371

esp_ble_mesh_prov_cb_param_t::ble_mesh_proxy_client_set_filter_type_comp_param::err_code (C++ 成员), 371

esp_ble_mesh_prov_cb_param_t::ble_mesh_proxy_client_set_filter_type_comp_param::net_idx (C++ 成员), 371

esp_ble_mesh_prov_cb_param_t::ble_mesh_proxy_gatt_disable_comp_param (C++ 类), 371

esp_ble_mesh_prov_cb_param_t::ble_mesh_proxy_gatt_disable_comp_param::err_code (C++ 成员), 371

esp_ble_mesh_prov_cb_param_t::ble_mesh_proxy_gatt_enable_comp_param (C++ 类), 371

esp_ble_mesh_prov_cb_param_t::ble_mesh_proxy_gatt_enable_comp_param::err_code (C++ 成员), 371

esp_ble_mesh_prov_cb_param_t::ble_mesh_proxy_identity_enable_comp_param (C++ 类), 371

esp_ble_mesh_prov_cb_param_t::ble_mesh_proxy_identity_enable_comp_param::err_code (C++ 成员), 371

esp_ble_mesh_prov_cb_param_t::ble_mesh_set_fast_prov_action_comp_param (C++ 类), 371

esp_ble_mesh_prov_cb_param_t::ble_mesh_set_fast_prov_action_comp_param::status_action (C++ 成员), 372

esp_ble_mesh_prov_cb_param_t::ble_mesh_set_fast_prov_info_comp_param (C++ 类), 372

esp_ble_mesh_prov_cb_param_t::ble_mesh_set_fast_prov_info_comp_param::status_match (C++ 成员), 372

esp_ble_mesh_prov_cb_param_t::ble_mesh_set_fast_prov_info_comp_param::status_net_idx (C++ 成员), 372

esp_ble_mesh_prov_cb_param_t::ble_mesh_set_fast_prov_info_ (C++ 成员), 372

esp_ble_mesh_prov_cb_param_t::ble_mesh_set_oob_pub_key_com (C++ 类), 372

esp_ble_mesh_prov_cb_param_t::ble_mesh_set_oob_pub_key_com (C++ 成员), 372

esp_ble_mesh_prov_cb_param_t::ble_mesh_set_prov_dev_name (C++ 类), 372

esp_ble_mesh_prov_cb_param_t::ble_mesh_set_prov_dev_name (C++ 成员), 372

esp_ble_mesh_prov_cb_param_t::ble_mesh_start_ble_advertisi (C++ 类), 372

esp_ble_mesh_prov_cb_param_t::ble_mesh_start_ble_advertisi (C++ 成员), 372

esp_ble_mesh_prov_cb_param_t::ble_mesh_start_ble_advertisi (C++ 成员), 372

esp_ble_mesh_prov_cb_param_t::ble_mesh_stop_ble_advertisin (C++ 类), 372

esp_ble_mesh_prov_cb_param_t::ble_mesh_stop_ble_advertisin (C++ 成员), 373

esp_ble_mesh_prov_cb_param_t::ble_mesh_stop_ble_advertisin (C++ 成员), 373

esp_ble_mesh_prov_cb_param_t::deinit_mesh_comp (C++ 成员), 354

esp_ble_mesh_prov_cb_param_t::enable (C++ 成员), 351

esp_ble_mesh_prov_cb_param_t::err_code (C++ 成员), 351

esp_ble_mesh_prov_cb_param_t::ESP_BLE_MESH_FRND_FRIENDSHIP (C++ 枚举子), 355

esp_ble_mesh_prov_cb_param_t::ESP_BLE_MESH_FRND_FRIENDSHIP (C++ 枚举子), 355

esp_ble_mesh_prov_cb_param_t::ESP_BLE_MESH_FRND_FRIENDSHIP (C++ 枚举子), 355

esp_ble_mesh_prov_cb_param_t::ESP_BLE_MESH_FRND_FRIENDSHIP (C++ 枚举子), 355

esp_ble_mesh_prov_cb_param_t::ESP_BLE_MESH_FRND_FRIENDSHIP (C++ 枚举子), 355

esp_ble_mesh_prov_cb_param_t::feature (C++ 成员), 352

esp_ble_mesh_prov_cb_param_t::frnd_friendship_establish (C++ 成员), 353

esp_ble_mesh_prov_cb_param_t::frnd_friendship_terminate (C++ 成员), 353
esp_ble_mesh_prov_cb_param_t::hb_dst (C++ 成员), 351
esp_ble_mesh_prov_cb_param_t::hb_src (C++ 成员), 351
esp_ble_mesh_prov_cb_param_t::heartbeat_msg_recv (C++ 成员), 353
esp_ble_mesh_prov_cb_param_t::hops (C++ 成员), 352
esp_ble_mesh_prov_cb_param_t::index (C++ 成员), 352
esp_ble_mesh_prov_cb_param_t::init_ttl (C++ 成员), 352
esp_ble_mesh_prov_cb_param_t::lpn_disable_comp (C++ 成员), 353
esp_ble_mesh_prov_cb_param_t::lpn_enable_comp (C++ 成员), 353
esp_ble_mesh_prov_cb_param_t::lpn_friendship_establish (C++ 成员), 353
esp_ble_mesh_prov_cb_param_t::lpn_friendship_terminate (C++ 成员), 353
esp_ble_mesh_prov_cb_param_t::lpn_poll_comp (C++ 成员), 353
esp_ble_mesh_prov_cb_param_t::model_sub_group_addr_comp (C++ 成员), 354
esp_ble_mesh_prov_cb_param_t::model_unsub_group_addr_comp (C++ 成员), 354
esp_ble_mesh_prov_cb_param_t::node_add_app_key_comp (C++ 成员), 349
esp_ble_mesh_prov_cb_param_t::node_add_net_key_comp (C++ 成员), 349
esp_ble_mesh_prov_cb_param_t::node_bind_app_key_to_model_comp (C++ 成员), 349
esp_ble_mesh_prov_cb_param_t::node_prov_complete (C++ 成员), 348
esp_ble_mesh_prov_cb_param_t::node_prov_disable_comp (C++ 成员), 348
esp_ble_mesh_prov_cb_param_t::node_prov_enable_comp (C++ 成员), 348
esp_ble_mesh_prov_cb_param_t::node_prov_input (C++ 成员), 348
esp_ble_mesh_prov_cb_param_t::node_prov_input_num_comp (C++ 成员), 349
esp_ble_mesh_prov_cb_param_t::node_prov_input_str_comp (C++ 成员), 349
esp_ble_mesh_prov_cb_param_t::node_prov_link_close (C++ 成员), 348
esp_ble_mesh_prov_cb_param_t::node_prov_link_open (C++ 成员), 348
esp_ble_mesh_prov_cb_param_t::node_prov_output_num (C++ 成员), 348
esp_ble_mesh_prov_cb_param_t::node_prov_output_str (C++ 成员), 348
esp_ble_mesh_prov_cb_param_t::node_prov_reset (C++ 成员), 348
esp_ble_mesh_prov_cb_param_t::node_prov_set_oob_pub_key_co (C++ 成员), 349
esp_ble_mesh_prov_cb_param_t::node_proxy_gatt_disable_comp (C++ 成员), 349
esp_ble_mesh_prov_cb_param_t::node_proxy_gatt_enable_comp (C++ 成员), 349
esp_ble_mesh_prov_cb_param_t::node_proxy_identity_enable_c (C++ 成员), 349
esp_ble_mesh_prov_cb_param_t::node_set_unprov_dev_name_com (C++ 成员), 348
esp_ble_mesh_prov_cb_param_t::op (C++ 成员), 351
esp_ble_mesh_prov_cb_param_t::prov_register_comp (C++ 成员), 348
esp_ble_mesh_prov_cb_param_t::provisioner_add_app_key_comp (C++ 成员), 350
esp_ble_mesh_prov_cb_param_t::provisioner_add_net_key_comp (C++ 成员), 350
esp_ble_mesh_prov_cb_param_t::provisioner_add_unprov_dev_c (C++ 成员), 350
esp_ble_mesh_prov_cb_param_t::provisioner_bind_app_key_to_ (C++ 成员), 350
esp_ble_mesh_prov_cb_param_t::provisioner_close_settings_w (C++ 成员), 352
esp_ble_mesh_prov_cb_param_t::provisioner_close_settings_w (C++ 成员), 352
esp_ble_mesh_prov_cb_param_t::provisioner_delete_dev_comp (C++ 成员), 350

esp_ble_mesh_prov_cb_param_t::provisioner_delete_node_with_addr_comp_param_t::provisioner_recv_unprov_adv_
(C++ 成员), 351
esp_ble_mesh_prov_cb_param_t::provisioner_delete_node_with_uuid_comp_param_t::provisioner_set_dev_uuid_mat
(C++ 成员), 351
esp_ble_mesh_prov_cb_param_t::provisioner_delete_only_agent_node_comp_param_t::provisioner_set_heartbeat_fi
(C++ 成员), 353
esp_ble_mesh_prov_cb_param_t::provisioner_delete_self_provisioner_comp_param_t::provisioner_set_heartbeat_fi
(C++ 成员), 353
esp_ble_mesh_prov_cb_param_t::provisioner_direct_erase_settings_comp_param_t::provisioner_set_node_name_co
(C++ 成员), 352
esp_ble_mesh_prov_cb_param_t::provisioner_enable_heartbeat_recv_comp_param_t::provisioner_set_primary_elem
(C++ 成员), 351
esp_ble_mesh_prov_cb_param_t::provisioner_open_settings_with_index_comp_param_t::provisioner_set_prov_data_in
(C++ 成员), 352
esp_ble_mesh_prov_cb_param_t::provisioner_open_settings_with_uuid_comp_param_t::provisioner_set_static_oob_v
(C++ 成员), 352
esp_ble_mesh_prov_cb_param_t::provisioner_prov_complete_esp_ble_mesh_prov_cb_param_t::provisioner_store_node_comp_
(C++ 成员), 350
esp_ble_mesh_prov_cb_param_t::provisioner_prov_read_oob_pub_key_comp_param_t::provisioner_update_app_key_c
(C++ 成员), 350
esp_ble_mesh_prov_cb_param_t::provisioner_prov_disable_comp_esp_ble_mesh_prov_cb_param_t::provisioner_update_net_key_c
(C++ 成员), 349
esp_ble_mesh_prov_cb_param_t::provisioner_prov_enable_comp_esp_ble_mesh_prov_cb_param_t::proxy_client_add_filter_addr
(C++ 成员), 349
esp_ble_mesh_prov_cb_param_t::provisioner_prov_input_esp_ble_mesh_prov_cb_param_t::proxy_client_connect_comp
(C++ 成员), 349
esp_ble_mesh_prov_cb_param_t::provisioner_prov_input_num_esp_ble_mesh_prov_cb_param_t::proxy_client_connected
(C++ 成员), 350
esp_ble_mesh_prov_cb_param_t::provisioner_prov_input_str_esp_ble_mesh_prov_cb_param_t::proxy_client_disconnect_comp
(C++ 成员), 350
esp_ble_mesh_prov_cb_param_t::provisioner_prov_link_close_esp_ble_mesh_prov_cb_param_t::proxy_client_disconnected
(C++ 成员), 349
esp_ble_mesh_prov_cb_param_t::provisioner_prov_link_open_esp_ble_mesh_prov_cb_param_t::proxy_client_recv_adv_pkt
(C++ 成员), 349
esp_ble_mesh_prov_cb_param_t::provisioner_prov_output_esp_ble_mesh_prov_cb_param_t::proxy_client_recv_filter_sta
(C++ 成员), 349
esp_ble_mesh_prov_cb_param_t::provisioner_prov_read_oob_pub_key_esp_ble_mesh_prov_cb_param_t::proxy_client_remove_filter_a
(C++ 成员), 349
esp_ble_mesh_prov_cb_param_t::provisioner_prov_read_oob_pub_key_comp_param_t::proxy_client_set_filter_type
(C++ 成员), 350
esp_ble_mesh_prov_cb_param_t::provisioner_recv_heartbeat_esp_ble_mesh_prov_cb_param_t::rssi (C++ 成
(C++ 成员), 352
员), 352

esp_ble_mesh_prov_cb_param_t::rx_ttl (C++ 成员), 352
esp_ble_mesh_prov_cb_param_t::set_fast_prov_action_comp (C++ 成员), 353
esp_ble_mesh_prov_cb_param_t::set_fast_prov_info_comp (C++ 成员), 353
esp_ble_mesh_prov_cb_param_t::start_ble_advertising_comp (C++ 成员), 354
esp_ble_mesh_prov_cb_param_t::stop_ble_advertising_comp (C++ 成员), 354
esp_ble_mesh_prov_cb_param_t::type (C++ 成员), 351
esp_ble_mesh_prov_cb_param_t::uid (C++ 成员), 352
esp_ble_mesh_prov_cb_t (C++ 类型), 443
esp_ble_mesh_prov_data_info_t (C++ 类), 382
esp_ble_mesh_prov_data_info_t::flag (C++ 成员), 383
esp_ble_mesh_prov_data_info_t::flags (C++ 成员), 382
esp_ble_mesh_prov_data_info_t::iv_index (C++ 成员), 383
esp_ble_mesh_prov_data_info_t::net_idx (C++ 成员), 382
ESP_BLE_MESH_PROV_EVT_MAX (C++ 枚举子), 417
ESP_BLE_MESH_PROV_GATT (C++ 枚举子), 411
ESP_BLE_MESH_PROV_INPUT_OOB_MAX_LEN (C 宏), 392
ESP_BLE_MESH_PROV_OOB_2D_CODE (C++ 枚举子), 411
ESP_BLE_MESH_PROV_OOB_BAR_CODE (C++ 枚举子), 411
ESP_BLE_MESH_PROV_OOB_IN_BOX (C++ 枚举子), 412
ESP_BLE_MESH_PROV_OOB_IN_MANUAL (C++ 枚举子), 412
esp_ble_mesh_prov_oob_info_t (C++ 类型), 411
ESP_BLE_MESH_PROV_OOB_NFC (C++ 枚举子), 411
ESP_BLE_MESH_PROV_OOB_NUMBER (C++ 枚举子), 411
ESP_BLE_MESH_PROV_OOB_ON_BOX (C++ 枚举子), 411
ESP_BLE_MESH_PROV_OOB_ON_DEV (C++ 枚举子), 412
ESP_BLE_MESH_PROV_OOB_ON_PAPER (C++ 枚举子), 412
ESP_BLE_MESH_PROV_OOB_OTHER (C++ 枚举子), 411
ESP_BLE_MESH_PROV_OOB_STRING (C++ 枚举子), 411
ESP_BLE_MESH_PROV_OOB_URI (C++ 枚举子), 411
ESP_BLE_MESH_PROV_OUTPUT_OOB_MAX_LEN (C 宏), 392
ESP_BLE_MESH_PROV_REGISTER_COMP_EVT (C++ 枚举子), 412
ESP_BLE_MESH_PROV_STATIC_OOB_MAX_LEN (C 宏), 392
esp_ble_mesh_prov_t (C++ 类), 381
esp_ble_mesh_provisioner_add_local_app_key (C++ 函数), 430
ESP_BLE_MESH_PROVISIONER_ADD_LOCAL_APP_KEY_COMP_EVT (C++ 枚举子), 415
esp_ble_mesh_provisioner_add_local_net_key (C++ 函数), 431
ESP_BLE_MESH_PROVISIONER_ADD_LOCAL_NET_KEY_COMP_EVT (C++ 枚举子), 415
esp_ble_mesh_provisioner_add_unprov_dev (C++ 函数), 439
ESP_BLE_MESH_PROVISIONER_ADD_UNPROV_DEV_COMP_EVT (C++ 枚举子), 414
esp_ble_mesh_provisioner_bind_app_key_to_local_model (C++ 函数), 431
ESP_BLE_MESH_PROVISIONER_BIND_APP_KEY_TO_MODEL_COMP_EVT (C++ 枚举子), 415
esp_ble_mesh_provisioner_close_settings_with_index (C++ 函数), 434
ESP_BLE_MESH_PROVISIONER_CLOSE_SETTINGS_WITH_INDEX_COMP_EV (C++ 枚举子), 416
esp_ble_mesh_provisioner_close_settings_with_uid (C++ 函数), 434
ESP_BLE_MESH_PROVISIONER_CLOSE_SETTINGS_WITH_UID_COMP_EVT (C++ 枚举子), 416
esp_ble_mesh_provisioner_delete_dev (C++ 函数), 441
ESP_BLE_MESH_PROVISIONER_DELETE_DEV_COMP_EVT

(C++ 枚举子), 414
esp_ble_mesh_provisioner_delete_node_with_addr (C++ 函数), 430
ESP_BLE_MESH_PROVISIONER_DELETE_NODE_WITH_ADDR_COMP_EVT (C++ 枚举子), 415
esp_ble_mesh_provisioner_delete_node_with_uuid (C++ 函数), 430
ESP_BLE_MESH_PROVISIONER_DELETE_NODE_WITH_UUID_COMP_EVT (C++ 枚举子), 415
esp_ble_mesh_provisioner_delete_settings_with_index (C++ 函数), 435
ESP_BLE_MESH_PROVISIONER_DELETE_SETTINGS_WITH_INDEX_COMP_EVT (C++ 枚举子), 416
esp_ble_mesh_provisioner_delete_settings_with_uid (C++ 函数), 435
ESP_BLE_MESH_PROVISIONER_DELETE_SETTINGS_WITH_UID_COMP_EVT (C++ 枚举子), 416
esp_ble_mesh_provisioner_direct_erase_settings (C++ 函数), 433
ESP_BLE_MESH_PROVISIONER_DRIECT_ERASE_SETTINGS_COMP_EVT (C++ 枚举子), 416
ESP_BLE_MESH_PROVISIONER_ENABLE_HEARTBEAT_RECV_COMP_EVT (C++ 枚举子), 415
esp_ble_mesh_provisioner_get_free_settings_count (C++ 函数), 436
esp_ble_mesh_provisioner_get_local_app_key (C++ 函数), 431
esp_ble_mesh_provisioner_get_local_net_key (C++ 函数), 432
esp_ble_mesh_provisioner_get_node_index (C++ 函数), 428
esp_ble_mesh_provisioner_get_node_name (C++ 函数), 428
esp_ble_mesh_provisioner_get_node_table_entry (C++ 函数), 429
esp_ble_mesh_provisioner_get_node_with_addr (C++ 函数), 429
esp_ble_mesh_provisioner_get_node_with_name (C++ 函数), 429
esp_ble_mesh_provisioner_get_node_with_uuid (C++ 函数), 429
esp_ble_mesh_provisioner_get_prov_node_count (C++ 函数), 429
esp_ble_mesh_provisioner_get_settings_index (C++ 函数), 436
esp_ble_mesh_provisioner_get_settings_uid (C++ 函数), 435
esp_ble_mesh_provisioner_input_number (C++ 函数), 439
esp_ble_mesh_provisioner_input_string (C++ 函数), 438
esp_ble_mesh_provisioner_open_settings_with_index (C++ 函数), 433
ESP_BLE_MESH_PROVISIONER_OPEN_SETTINGS_WITH_INDEX_COMP_EVT (C++ 枚举子), 416
esp_ble_mesh_provisioner_open_settings_with_uid (C++ 函数), 434
ESP_BLE_MESH_PROVISIONER_OPEN_SETTINGS_WITH_UID_COMP_EVT (C++ 枚举子), 416
ESP_BLE_MESH_PROVISIONER_PROV_COMPLETE_EVT (C++ 枚举子), 414
ESP_BLE_MESH_PROVISIONER_PROV_DEV_WITH_ADDR_COMP_EVT (C++ 枚举子), 414
esp_ble_mesh_provisioner_prov_device_with_addr (C++ 函数), 441
esp_ble_mesh_provisioner_prov_disable (C++ 函数), 439
ESP_BLE_MESH_PROVISIONER_PROV_DISABLE_COMP_EVT (C++ 枚举子), 414
esp_ble_mesh_provisioner_prov_enable (C++ 函数), 439
ESP_BLE_MESH_PROVISIONER_PROV_ENABLE_COMP_EVT (C++ 枚举子), 414
ESP_BLE_MESH_PROVISIONER_PROV_INPUT_EVT (C++ 枚举子), 414
ESP_BLE_MESH_PROVISIONER_PROV_INPUT_NUMBER_COMP_EVT (C++ 枚举子), 415
ESP_BLE_MESH_PROVISIONER_PROV_INPUT_STRING_COMP_EVT (C++ 枚举子), 415
ESP_BLE_MESH_PROVISIONER_PROV_LINK_CLOSE_EVT (C++ 枚举子), 414
ESP_BLE_MESH_PROVISIONER_PROV_LINK_OPEN_EVT (C++ 枚举子), 414
ESP_BLE_MESH_PROVISIONER_PROV_OUTPUT_EVT

(C++ 枚举子), 414
ESP_BLE_MESH_PROVISIONER_PROV_READ_OOB_PUB_KEY_COMP_EVT
(C++ 枚举子), 415
ESP_BLE_MESH_PROVISIONER_PROV_READ_OOB_PUB_KEY_EVT
(C++ 枚举子), 414
esp_ble_mesh_provisioner_read_oob_pub_key
(C++ 函数), 438
esp_ble_mesh_provisioner_recv_heartbeat
(C++ 函数), 432
ESP_BLE_MESH_PROVISIONER_RECV_HEARTBEAT_MESSAGE_EVT
(C++ 枚举子), 415
ESP_BLE_MESH_PROVISIONER_RECV_UNPROV_ADV_PKT_EVT
(C++ 枚举子), 414
esp_ble_mesh_provisioner_set_dev_uuid_match
(C++ 函数), 442
ESP_BLE_MESH_PROVISIONER_SET_DEV_UUID_MATCH_COMP_EVT
(C++ 枚举子), 414
esp_ble_mesh_provisioner_set_heartbeat_filter_info
(C++ 函数), 433
ESP_BLE_MESH_PROVISIONER_SET_HEARTBEAT_FILTER_INFO_COMP_EVT
(C++ 枚举子), 415
esp_ble_mesh_provisioner_set_heartbeat_filter_type
(C++ 函数), 432
ESP_BLE_MESH_PROVISIONER_SET_HEARTBEAT_FILTER_TYPE_COMP_EVT
(C++ 枚举子), 415
esp_ble_mesh_provisioner_set_node_name (C++
函数), 428
ESP_BLE_MESH_PROVISIONER_SET_NODE_NAME_COMP_EVT
(C++ 枚举子), 415
esp_ble_mesh_provisioner_set_primary_elem_addr
(C++ 函数), 442
ESP_BLE_MESH_PROVISIONER_SET_PRIMARY_ELEM_ADDR_COMP_EVT
(C++ 枚举子), 415
esp_ble_mesh_provisioner_set_prov_data_info
(C++ 函数), 442
ESP_BLE_MESH_PROVISIONER_SET_PROV_DATA_INFO_COMP_EVT
(C++ 枚举子), 414
esp_ble_mesh_provisioner_set_static_oob_value
(C++ 函数), 442
ESP_BLE_MESH_PROVISIONER_SET_STATIC_OOB_VALUE_COMP_EVT
(C++ 枚举子), 414
esp_ble_mesh_provisioner_store_node_comp_data
(C++ 函数), 428
ESP_BLE_MESH_PROVISIONER_STORE_NODE_COMP_DATA_COMP_EVT
(C++ 枚举子), 415
esp_ble_mesh_provisioner_update_local_app_key
(C++ 函数), 430
ESP_BLE_MESH_PROVISIONER_UPDATE_LOCAL_APP_KEY_COMP_EVT
(C++ 枚举子), 415
esp_ble_mesh_provisioner_update_local_net_key
(C++ 函数), 432
ESP_BLE_MESH_PROVISIONER_UPDATE_LOCAL_NET_KEY_COMP_EVT
(C++ 枚举子), 415
esp_ble_mesh_proxy_client_add_filter_addr
(C++ 函数), 445
ESP_BLE_MESH_PROXY_CLIENT_ADD_FILTER_ADDR_COMP_EVT
(C++ 枚举子), 417
esp_ble_mesh_proxy_client_connect (C++ 函
数), 444
ESP_BLE_MESH_PROXY_CLIENT_CONNECT_COMP_EVT
(C++ 枚举子), 417
ESP_BLE_MESH_PROXY_CLIENT_CONNECTED_EVT
(C++ 枚举子), 417
esp_ble_mesh_proxy_client_disconnect (C++
函数), 445
ESP_BLE_MESH_PROXY_CLIENT_DISCONNECT_COMP_EVT
(C++ 枚举子), 417
ESP_BLE_MESH_PROXY_CLIENT_DISCONNECTED_EVT
(C++ 枚举子), 417
ESP_BLE_MESH_PROXY_CLIENT_RECV_ADV_PKT_EVT
(C++ 枚举子), 417
ESP_BLE_MESH_PROXY_CLIENT_RECV_FILTER_STATUS_EVT
(C++ 枚举子), 417
esp_ble_mesh_proxy_client_remove_filter_addr
(C++ 函数), 445
ESP_BLE_MESH_PROXY_CLIENT_REMOVE_FILTER_ADDR_COMP_EVT
(C++ 枚举子), 417
esp_ble_mesh_proxy_client_set_filter_type
(C++ 函数), 445
ESP_BLE_MESH_PROXY_CLIENT_SET_FILTER_TYPE_COMP_EVT
(C++ 枚举子), 417
esp_ble_mesh_proxy_filter_type_t (C++ 类型),
412
esp_ble_mesh_proxy_gatt_disable (C++ 函数),

444
esp_ble_mesh_proxy_gatt_enable (C++ 函数), 444
esp_ble_mesh_proxy_identity_enable (C++ 函数), 444
ESP_BLE_MESH_PUBLISH_TRANSMIT (C 宏), 391
ESP_BLE_MESH_PUSH (C++ 枚举子), 411
esp_ble_mesh_register_config_client_callback (C++ 函数), 446
esp_ble_mesh_register_config_server_callback (C++ 函数), 446
esp_ble_mesh_register_custom_model_callback (C++ 函数), 425
esp_ble_mesh_register_generic_client_callback (C++ 函数), 478
esp_ble_mesh_register_generic_server_callback (C++ 函数), 478
esp_ble_mesh_register_health_client_callback (C++ 函数), 520
esp_ble_mesh_register_health_server_callback (C++ 函数), 520
esp_ble_mesh_register_light_client_callback (C++ 函数), 531
esp_ble_mesh_register_lighting_server_callback (C++ 函数), 532
esp_ble_mesh_register_prov_callback (C++ 函数), 436
esp_ble_mesh_register_sensor_client_callback (C++ 函数), 588
esp_ble_mesh_register_sensor_server_callback (C++ 函数), 589
esp_ble_mesh_register_time_scene_client_callback (C++ 函数), 609
esp_ble_mesh_register_time_scene_server_callback (C++ 函数), 610
ESP_BLE_MESH_RELAY_DISABLED (C 宏), 390
ESP_BLE_MESH_RELAY_ENABLED (C 宏), 390
ESP_BLE_MESH_RELAY_NOT_SUPPORTED (C 宏), 390
ESP_BLE_MESH_SAMPLE_FUNC_ACCUMULATED (C++ 枚举子), 608
ESP_BLE_MESH_SAMPLE_FUNC_ARITHMETIC_MEAN (C++ 枚举子), 608
ESP_BLE_MESH_SAMPLE_FUNC_COUNT (C++ 枚举子), 608
ESP_BLE_MESH_SAMPLE_FUNC_INSTANTANEOUS (C++ 枚举子), 608
ESP_BLE_MESH_SAMPLE_FUNC_MAXIMUM (C++ 枚举子), 608
ESP_BLE_MESH_SAMPLE_FUNC_MINIMUM (C++ 枚举子), 608
ESP_BLE_MESH_SAMPLE_FUNC_RMS (C++ 枚举子), 608
ESP_BLE_MESH_SAMPLE_FUNC_UNSPECIFIED (C++ 枚举子), 608
esp_ble_mesh_scene_delete_t (C++ 类), 615
esp_ble_mesh_scene_delete_t::scene_number (C++ 成员), 615
ESP_BLE_MESH_SCENE_NOT_FOUND (C 宏), 637
ESP_BLE_MESH_SCENE_NUMBER_LEN (C 宏), 635
esp_ble_mesh_scene_recall_t (C++ 类), 615
esp_ble_mesh_scene_recall_t::delay (C++ 成员), 615
esp_ble_mesh_scene_recall_t::op_en (C++ 成员), 615
esp_ble_mesh_scene_recall_t::scene_number (C++ 成员), 615
esp_ble_mesh_scene_recall_t::tid (C++ 成员), 615
esp_ble_mesh_scene_recall_t::trans_time (C++ 成员), 615
ESP_BLE_MESH_SCENE_REG_FULL (C 宏), 636
esp_ble_mesh_scene_register_status_cb_t (C++ 类), 618
esp_ble_mesh_scene_register_status_cb_t::current_scene (C++ 成员), 618
esp_ble_mesh_scene_register_status_cb_t::scenes (C++ 成员), 618
esp_ble_mesh_scene_register_status_cb_t::status_code (C++ 成员), 618
esp_ble_mesh_scene_register_t (C++ 类), 621
esp_ble_mesh_scene_register_t::scene_number (C++ 成员), 621
esp_ble_mesh_scene_register_t::scene_type (C++ 成员), 621

esp_ble_mesh_scene_register_t::scene_value (C++ 成员), 622
esp_ble_mesh_scene_setup_srv_t (C++ 类), 623
esp_ble_mesh_scene_setup_srv_t::model (C++ 成员), 623
esp_ble_mesh_scene_setup_srv_t::rsp_ctrl (C++ 成员), 623
esp_ble_mesh_scene_setup_srv_t::state (C++ 成员), 623
esp_ble_mesh_scene_srv_t (C++ 类), 623
esp_ble_mesh_scene_srv_t::last (C++ 成员), 623
esp_ble_mesh_scene_srv_t::model (C++ 成员), 623
esp_ble_mesh_scene_srv_t::rsp_ctrl (C++ 成员), 623
esp_ble_mesh_scene_srv_t::state (C++ 成员), 623
esp_ble_mesh_scene_srv_t::transition (C++ 成员), 623
esp_ble_mesh_scene_status_cb_t (C++ 类), 618
esp_ble_mesh_scene_status_cb_t::current_scene (C++ 成员), 618
esp_ble_mesh_scene_status_cb_t::op_en (C++ 成员), 618
esp_ble_mesh_scene_status_cb_t::remain_time (C++ 成员), 618
esp_ble_mesh_scene_status_cb_t::status_code (C++ 成员), 618
esp_ble_mesh_scene_status_cb_t::target_scene (C++ 成员), 618
esp_ble_mesh_scene_store_t (C++ 类), 615
esp_ble_mesh_scene_store_t::scene_number (C++ 成员), 615
ESP_BLE_MESH_SCENE_SUCCESS (C 宏), 636
esp_ble_mesh_scenes_state_t (C++ 类), 622
esp_ble_mesh_scenes_state_t::current_scene (C++ 成员), 622
esp_ble_mesh_scenes_state_t::in_progress (C++ 成员), 623
esp_ble_mesh_scenes_state_t::scene_count (C++ 成员), 622
esp_ble_mesh_scenes_state_t::scenes (C++ 成员), 622
esp_ble_mesh_scenes_state_t::status_code (C++ 成员), 623
esp_ble_mesh_scenes_state_t::target_scene (C++ 成员), 622
ESP_BLE_MESH_SCHEDULE_ACT_NO_ACTION (C 宏), 636
ESP_BLE_MESH_SCHEDULE_ACT_SCENE_RECALL (C 宏), 636
ESP_BLE_MESH_SCHEDULE_ACT_TURN_OFF (C 宏), 636
ESP_BLE_MESH_SCHEDULE_ACT_TURN_ON (C 宏), 636
ESP_BLE_MESH_SCHEDULE_DAY_ANY_DAY (C 宏), 635
ESP_BLE_MESH_SCHEDULE_ENTRY_MAX_INDEX (C 宏), 636
ESP_BLE_MESH_SCHEDULE_HOUR_ANY_HOUR (C 宏), 635
ESP_BLE_MESH_SCHEDULE_HOUR_ONCE_A_DAY (C 宏), 635
esp_ble_mesh_schedule_register_t (C++ 类), 624
esp_ble_mesh_schedule_register_t::action (C++ 成员), 624
esp_ble_mesh_schedule_register_t::day (C++ 成员), 624
esp_ble_mesh_schedule_register_t::day_of_week (C++ 成员), 624
esp_ble_mesh_schedule_register_t::hour (C++ 成员), 624
esp_ble_mesh_schedule_register_t::in_use (C++ 成员), 624
esp_ble_mesh_schedule_register_t::minute (C++ 成员), 624
esp_ble_mesh_schedule_register_t::month (C++ 成员), 624
esp_ble_mesh_schedule_register_t::scene_number (C++ 成员), 624
esp_ble_mesh_schedule_register_t::second (C++ 成员), 624
esp_ble_mesh_schedule_register_t::trans_time (C++ 成员), 624
esp_ble_mesh_schedule_register_t::year (C++

成员), 624
ESP_BLE_MESH_SCHEDULE_SCENE_NO_SCENE (C 宏), 636
ESP_BLE_MESH_SCHEDULE_SEC_ANY_OF_HOUR (C 宏), 635
ESP_BLE_MESH_SCHEDULE_SEC_ANY_OF_MIN (C 宏), 636
ESP_BLE_MESH_SCHEDULE_SEC_EVERY_15_MIN (C 宏), 635
ESP_BLE_MESH_SCHEDULE_SEC_EVERY_15_SEC (C 宏), 636
ESP_BLE_MESH_SCHEDULE_SEC_EVERY_20_MIN (C 宏), 635
ESP_BLE_MESH_SCHEDULE_SEC_EVERY_20_SEC (C 宏), 636
ESP_BLE_MESH_SCHEDULE_SEC_ONCE_AN_HOUR (C 宏), 636
ESP_BLE_MESH_SCHEDULE_SEC_ONCE_AN_MIN (C 宏), 636
ESP_BLE_MESH_SCHEDULE_YEAR_ANY_YEAR (C 宏), 635
esp_ble_mesh_scheduler_act_get_t (C++ 类), 615
esp_ble_mesh_scheduler_act_get_t::index (C++ 成员), 616
esp_ble_mesh_scheduler_act_set_t (C++ 类), 616
esp_ble_mesh_scheduler_act_set_t::action (C++ 成员), 616
esp_ble_mesh_scheduler_act_set_t::day (C++ 成员), 616
esp_ble_mesh_scheduler_act_set_t::day_of_week (C++ 成员), 616
esp_ble_mesh_scheduler_act_set_t::hour (C++ 成员), 616
esp_ble_mesh_scheduler_act_set_t::index (C++ 成员), 616
esp_ble_mesh_scheduler_act_set_t::minute (C++ 成员), 616
esp_ble_mesh_scheduler_act_set_t::month (C++ 成员), 616
esp_ble_mesh_scheduler_act_set_t::scene_number (C++ 成员), 616
esp_ble_mesh_scheduler_act_set_t::second (C++ 成员), 616
esp_ble_mesh_scheduler_act_set_t::trans_time (C++ 成员), 616
esp_ble_mesh_scheduler_act_set_t::year (C++ 成员), 616
esp_ble_mesh_scheduler_act_status_cb_t (C++ 类), 619
esp_ble_mesh_scheduler_act_status_cb_t::action (C++ 成员), 619
esp_ble_mesh_scheduler_act_status_cb_t::day (C++ 成员), 619
esp_ble_mesh_scheduler_act_status_cb_t::day_of_week (C++ 成员), 619
esp_ble_mesh_scheduler_act_status_cb_t::hour (C++ 成员), 619
esp_ble_mesh_scheduler_act_status_cb_t::index (C++ 成员), 619
esp_ble_mesh_scheduler_act_status_cb_t::minute (C++ 成员), 619
esp_ble_mesh_scheduler_act_status_cb_t::month (C++ 成员), 619
esp_ble_mesh_scheduler_act_status_cb_t::scene_number (C++ 成员), 619
esp_ble_mesh_scheduler_act_status_cb_t::second (C++ 成员), 619
esp_ble_mesh_scheduler_act_status_cb_t::trans_time (C++ 成员), 619
esp_ble_mesh_scheduler_act_status_cb_t::year (C++ 成员), 619
esp_ble_mesh_scheduler_setup_srv_t (C++ 类), 625
esp_ble_mesh_scheduler_setup_srv_t::model (C++ 成员), 625
esp_ble_mesh_scheduler_setup_srv_t::rsp_ctrl (C++ 成员), 625
esp_ble_mesh_scheduler_setup_srv_t::state (C++ 成员), 625
esp_ble_mesh_scheduler_srv_t (C++ 类), 625
esp_ble_mesh_scheduler_srv_t::model (C++ 成员), 625

esp_ble_mesh_scheduler_srv_t::rsp_ctrl (C++ 成员), 625
esp_ble_mesh_scheduler_srv_t::state (C++ 成员), 625
esp_ble_mesh_scheduler_state_t (C++ 类), 624
esp_ble_mesh_scheduler_state_t::schedule_count (C++ 成员), 624
esp_ble_mesh_scheduler_state_t::schedules (C++ 成员), 624
esp_ble_mesh_scheduler_status_cb_t (C++ 类), 618
esp_ble_mesh_scheduler_status_cb_t::schedules (C++ 成员), 619
ESP_BLE_MESH_SDU_MAX_LEN (C 宏), 389
ESP_BLE_MESH_SELF_TEST_ERROR (C 宏), 529
ESP_BLE_MESH_SELF_TEST_WARNING (C 宏), 529
esp_ble_mesh_sensor_cadence_get_t (C++ 类), 592
esp_ble_mesh_sensor_cadence_get_t::property_id (C++ 成员), 592
esp_ble_mesh_sensor_cadence_set_t (C++ 类), 592
esp_ble_mesh_sensor_cadence_set_t::fast_cadence_high (C++ 成员), 593
esp_ble_mesh_sensor_cadence_set_t::fast_cadence_low (C++ 成员), 593
esp_ble_mesh_sensor_cadence_set_t::fast_cadence_period_divisor (C++ 成员), 592
esp_ble_mesh_sensor_cadence_set_t::property_id (C++ 成员), 592
esp_ble_mesh_sensor_cadence_set_t::status_min_interval (C++ 成员), 593
esp_ble_mesh_sensor_cadence_set_t::status_trigger_delta_down (C++ 成员), 593
esp_ble_mesh_sensor_cadence_set_t::status_trigger_delta_up (C++ 成员), 593
esp_ble_mesh_sensor_cadence_set_t::status_trigger_type (C++ 成员), 592
esp_ble_mesh_sensor_cadence_status_cb_t (C++ 类), 595
esp_ble_mesh_sensor_cadence_status_cb_t::property_id (C++ 成员), 595
esp_ble_mesh_sensor_cadence_status_cb_t::sensor_cadence_va
esp_ble_mesh_sensor_cadence_t (C++ 类), 597
esp_ble_mesh_sensor_cadence_t::fast_cadence_high (C++ 成员), 598
esp_ble_mesh_sensor_cadence_t::fast_cadence_low (C++ 成员), 598
esp_ble_mesh_sensor_cadence_t::min_interval (C++ 成员), 598
esp_ble_mesh_sensor_cadence_t::period_divisor (C++ 成员), 597
esp_ble_mesh_sensor_cadence_t::trigger_delta_down (C++ 成员), 597
esp_ble_mesh_sensor_cadence_t::trigger_delta_up (C++ 成员), 598
esp_ble_mesh_sensor_cadence_t::trigger_type (C++ 成员), 597
esp_ble_mesh_sensor_client_cb_event_t (C++ 类型), 608
esp_ble_mesh_sensor_client_cb_param_t (C++ 类), 596
esp_ble_mesh_sensor_client_cb_param_t::error_code (C++ 成员), 596
esp_ble_mesh_sensor_client_cb_param_t::params (C++ 成员), 596
esp_ble_mesh_sensor_client_cb_param_t::status_cb (C++ 成员), 596
esp_ble_mesh_sensor_client_cb_t (C++ 类型), 607
ESP_BLE_MESH_SENSOR_CLIENT_EVT_MAX (C++ 枚举子), 608
esp_ble_mesh_sensor_client_get_state (C++ 函数), 588
ESP_BLE_MESH_SENSOR_CLIENT_GET_STATE_EVT (C++ 枚举子), 608
esp_ble_mesh_sensor_client_get_state_t (C++ 类型), 589
esp_ble_mesh_sensor_client_get_state_t::cadence_get (C++ 成员), 589
esp_ble_mesh_sensor_client_get_state_t::column_get (C++ 成员), 589
esp_ble_mesh_sensor_client_get_state_t::descriptor_get

(C++ 成员), 589
esp_ble_mesh_sensor_client_get_state_t::sensor_get (C++ 成员), 589
esp_ble_mesh_sensor_client_get_state_t::series_get (C++ 成员), 590
esp_ble_mesh_sensor_client_get_state_t::settings_get (C++ 成员), 589
esp_ble_mesh_sensor_client_get_state_t::settings_get (C++ 成员), 589
ESP_BLE_MESH_SENSOR_CLIENT_PUBLISH_EVT (C++ 枚举子), 608
esp_ble_mesh_sensor_client_set_state (C++ 函数), 588
ESP_BLE_MESH_SENSOR_CLIENT_SET_STATE_EVT (C++ 枚举子), 608
esp_ble_mesh_sensor_client_set_state_t (C++ 类型), 590
esp_ble_mesh_sensor_client_set_state_t::cadence_set (C++ 成员), 590
esp_ble_mesh_sensor_client_set_state_t::settings_set (C++ 成员), 590
esp_ble_mesh_sensor_client_status_cb_t (C++ 类型), 590
esp_ble_mesh_sensor_client_status_cb_t::cadence_status (C++ 成员), 590
esp_ble_mesh_sensor_client_status_cb_t::column_status (C++ 成员), 590
esp_ble_mesh_sensor_client_status_cb_t::descriptor_status (C++ 成员), 590
esp_ble_mesh_sensor_client_status_cb_t::sensor_status (C++ 成员), 590
esp_ble_mesh_sensor_client_status_cb_t::series_status (C++ 成员), 590
esp_ble_mesh_sensor_client_status_cb_t::settings_status (C++ 成员), 590
esp_ble_mesh_sensor_client_status_cb_t::settings_status (C++ 成员), 590
ESP_BLE_MESH_SENSOR_CLIENT_TIMEOUT_EVT (C++ 枚举子), 608
esp_ble_mesh_sensor_column_get_t (C++ 类), 594
esp_ble_mesh_sensor_column_get_t::property_id (C++ 成员), 594
esp_ble_mesh_sensor_column_get_t::raw_value_x (C++ 成员), 594
esp_ble_mesh_sensor_column_status_cb_t (C++ 类), 596
esp_ble_mesh_sensor_column_status_cb_t::property_id (C++ 成员), 596
esp_ble_mesh_sensor_column_status_cb_t::sensor_column_valu (C++ 成员), 596
ESP_BLE_MESH_SENSOR_DATA_FORMAT_A (C 宏), 605
ESP_BLE_MESH_SENSOR_DATA_FORMAT_A_MPID (C 宏), 606
ESP_BLE_MESH_SENSOR_DATA_FORMAT_A_MPID_LEN (C 宏), 605
ESP_BLE_MESH_SENSOR_DATA_FORMAT_B (C 宏), 605
ESP_BLE_MESH_SENSOR_DATA_FORMAT_B_MPID (C 宏), 607
ESP_BLE_MESH_SENSOR_DATA_FORMAT_B_MPID_LEN (C 宏), 605
esp_ble_mesh_sensor_data_t (C++ 类), 598
esp_ble_mesh_sensor_data_t::format (C++ 成员), 598
esp_ble_mesh_sensor_data_t::length (C++ 成员), 598
esp_ble_mesh_sensor_data_t::raw_value (C++ 成员), 598
ESP_BLE_MESH_SENSOR_DATA_ZERO_LEN (C 宏), 605
esp_ble_mesh_sensor_descriptor_get_t (C++ 类), 592
esp_ble_mesh_sensor_descriptor_get_t::op_en (C++ 成员), 592
esp_ble_mesh_sensor_descriptor_get_t::property_id (C++ 成员), 592
ESP_BLE_MESH_SENSOR_DESCRIPTOR_LEN (C 宏), 604
esp_ble_mesh_sensor_descriptor_status_cb_t (C++ 类), 594
esp_ble_mesh_sensor_descriptor_status_cb_t::descriptor (C++ 成员), 595
esp_ble_mesh_sensor_descriptor_t (C++ 类), 596
esp_ble_mesh_sensor_descriptor_t::measure_period (C++ 成员), 597

esp_ble_mesh_sensor_descriptor_t::negative_tolerance (C++ 成员), 594
esp_ble_mesh_sensor_descriptor_t::positive_tolerance (C++ 成员), 597
esp_ble_mesh_sensor_descriptor_t::sampling_function (C++ 成员), 597
esp_ble_mesh_sensor_descriptor_t::update_interval (C++ 成员), 597
ESP_BLE_MESH_SENSOR_DIVISOR_TRIGGER_TYPE_LEN (C 宏), 605
esp_ble_mesh_sensor_get_t (C++ 类), 594
esp_ble_mesh_sensor_get_t::op_en (C++ 成员), 594
esp_ble_mesh_sensor_get_t::property_id (C++ 成员), 594
esp_ble_mesh_sensor_message_opcode_t (C++ 类型), 410
ESP_BLE_MESH_SENSOR_NOT_APPL_MEASURE_PERIOD (C 宏), 604
ESP_BLE_MESH_SENSOR_NOT_APPL_UPDATE_INTERVAL (C 宏), 604
ESP_BLE_MESH_SENSOR_PERIOD_DIVISOR_MAX_VALUE (C 宏), 605
ESP_BLE_MESH_SENSOR_PROPERTY_ID_LEN (C 宏), 604
esp_ble_mesh_sensor_sample_func (C++ 类型), 608
esp_ble_mesh_sensor_series_column_t (C++ 类), 598
esp_ble_mesh_sensor_series_column_t::column_width (C++ 成员), 598
esp_ble_mesh_sensor_series_column_t::raw_value1 (C++ 成员), 598
esp_ble_mesh_sensor_series_column_t::raw_value2 (C++ 成员), 598
esp_ble_mesh_sensor_series_get_t (C++ 类), 594
esp_ble_mesh_sensor_series_get_t::op_en (C++ 成员), 594
esp_ble_mesh_sensor_series_get_t::property_id (C++ 成员), 594
esp_ble_mesh_sensor_series_get_t::raw_value_x1 (C++ 成员), 594
esp_ble_mesh_sensor_series_get_t::raw_value_x2 (C++ 成员), 594
esp_ble_mesh_sensor_series_status_cb_t (C++ 类), 596
esp_ble_mesh_sensor_series_status_cb_t::property_id (C++ 成员), 596
esp_ble_mesh_sensor_series_status_cb_t::sensor_series_valu (C++ 成员), 596
esp_ble_mesh_sensor_server_cb_event_t (C++ 类型), 608
esp_ble_mesh_sensor_server_cb_param_t (C++ 类), 603
esp_ble_mesh_sensor_server_cb_param_t::ctx (C++ 成员), 603
esp_ble_mesh_sensor_server_cb_param_t::model (C++ 成员), 603
esp_ble_mesh_sensor_server_cb_param_t::value (C++ 成员), 603
esp_ble_mesh_sensor_server_cb_t (C++ 类型), 607
esp_ble_mesh_sensor_server_cb_value_t (C++ 类型), 591
esp_ble_mesh_sensor_server_cb_value_t::get (C++ 成员), 592
esp_ble_mesh_sensor_server_cb_value_t::set (C++ 成员), 592
esp_ble_mesh_sensor_server_cb_value_t::state_change (C++ 成员), 592
ESP_BLE_MESH_SENSOR_SERVER_EVT_MAX (C++ 枚举子), 609
ESP_BLE_MESH_SENSOR_SERVER_RECV_GET_MSG_EVT (C++ 枚举子), 609
esp_ble_mesh_sensor_server_recv_get_msg_t (C++ 类型), 591
esp_ble_mesh_sensor_server_recv_get_msg_t::sensor_cadence (C++ 成员), 591
esp_ble_mesh_sensor_server_recv_get_msg_t::sensor_column (C++ 成员), 591
esp_ble_mesh_sensor_server_recv_get_msg_t::sensor_data (C++ 成员), 591
esp_ble_mesh_sensor_server_recv_get_msg_t::sensor_descript

(C++ 成员), 591
esp_ble_mesh_sensor_server_recv_get_msg_t::sensor_series_msg (C++ 成员), 591
esp_ble_mesh_sensor_server_recv_get_msg_t::sensor_setting_msg (C++ 成员), 591
esp_ble_mesh_sensor_server_recv_get_msg_t::sensor_settings_msg (C++ 成员), 591
ESP_BLE_MESH_SENSOR_SERVER_RECV_SET_MSG_EVT (C++ 枚举子), 609
esp_ble_mesh_sensor_server_recv_set_msg_t (C++ 类型), 591
esp_ble_mesh_sensor_server_recv_set_msg_t::sensor_cadence_set (C++ 成员), 591
esp_ble_mesh_sensor_server_recv_set_msg_t::sensor_setting_set (C++ 成员), 591
ESP_BLE_MESH_SENSOR_SERVER_STATE_CHANGE_EVT (C++ 枚举子), 608
esp_ble_mesh_sensor_server_state_change_t (C++ 类型), 590
esp_ble_mesh_sensor_server_state_change_t::sensor_cadence_set (C++ 成员), 591
esp_ble_mesh_sensor_server_state_change_t::sensor_setting_set (C++ 成员), 591
ESP_BLE_MESH_SENSOR_SETTING_ACCESS_LEN (C 宏), 605
ESP_BLE_MESH_SENSOR_SETTING_ACCESS_READ (C 宏), 605
ESP_BLE_MESH_SENSOR_SETTING_ACCESS_READ_WRITE (C 宏), 605
esp_ble_mesh_sensor_setting_get_t (C++ 类), 593
esp_ble_mesh_sensor_setting_get_t::sensor_property_id (C++ 成员), 593
esp_ble_mesh_sensor_setting_get_t::sensor_setting_property_id (C++ 成员), 593
ESP_BLE_MESH_SENSOR_SETTING_PROPERTY_ID_LEN (C 宏), 605
esp_ble_mesh_sensor_setting_set_t (C++ 类), 593
esp_ble_mesh_sensor_setting_set_t::sensor_property_id (C++ 成员), 593
esp_ble_mesh_sensor_setting_set_t::sensor_setting_property_id (C++ 成员), 593
esp_ble_mesh_sensor_setting_set_t::sensor_setting_raw (C++ 成员), 593
esp_ble_mesh_sensor_setting_status_cb_t (C++ 类), 595
esp_ble_mesh_sensor_setting_status_cb_t::op_en (C++ 成员), 595
esp_ble_mesh_sensor_setting_status_cb_t::sensor_property_id (C++ 成员), 595
esp_ble_mesh_sensor_setting_status_cb_t::sensor_setting_access (C++ 成员), 595
esp_ble_mesh_sensor_setting_status_cb_t::sensor_setting_property_id (C++ 成员), 595
esp_ble_mesh_sensor_setting_status_cb_t::sensor_setting_raw (C++ 成员), 595
esp_ble_mesh_sensor_setting_t (C++ 类), 597
esp_ble_mesh_sensor_setting_t::access (C++ 成员), 597
esp_ble_mesh_sensor_setting_t::property_id (C++ 成员), 597
esp_ble_mesh_sensor_setting_t::raw (C++ 成员), 597
esp_ble_mesh_sensor_settings_get_t (C++ 类), 593
esp_ble_mesh_sensor_settings_get_t::sensor_property_id (C++ 成员), 593
esp_ble_mesh_sensor_settings_status_cb_t (C++ 类), 595
esp_ble_mesh_sensor_settings_status_cb_t::sensor_property_id (C++ 成员), 595
esp_ble_mesh_sensor_settings_status_cb_t::sensor_setting_property_id (C++ 成员), 595
esp_ble_mesh_sensor_setup_srv_t (C++ 类), 599
esp_ble_mesh_sensor_setup_srv_t::model (C++ 成员), 600
esp_ble_mesh_sensor_setup_srv_t::rsp_ctrl (C++ 成员), 600
esp_ble_mesh_sensor_setup_srv_t::state_count (C++ 成员), 600
esp_ble_mesh_sensor_setup_srv_t::states (C++ 成员), 600
esp_ble_mesh_sensor_srv_t (C++ 类), 599

esp_ble_mesh_sensor_srv_t::model (C++ 成员), 599
esp_ble_mesh_sensor_srv_t::rsp_ctrl (C++ 成员), 599
esp_ble_mesh_sensor_srv_t::state_count (C++ 成员), 599
esp_ble_mesh_sensor_srv_t::states (C++ 成员), 599
esp_ble_mesh_sensor_state_t (C++ 类), 598
esp_ble_mesh_sensor_state_t::cadence (C++ 成员), 599
esp_ble_mesh_sensor_state_t::descriptor (C++ 成员), 599
esp_ble_mesh_sensor_state_t::sensor_data (C++ 成员), 599
esp_ble_mesh_sensor_state_t::sensor_property_id (C++ 成员), 599
esp_ble_mesh_sensor_state_t::series_column (C++ 成员), 599
esp_ble_mesh_sensor_state_t::setting_count (C++ 成员), 599
esp_ble_mesh_sensor_state_t::settings (C++ 成员), 599
esp_ble_mesh_sensor_status_cb_t (C++ 类), 595
esp_ble_mesh_sensor_status_cb_t::marshalled_sensor_data (C++ 成员), 596
ESP_BLE_MESH_SENSOR_STATUS_MIN_INTERVAL_LEN (C 宏), 605
ESP_BLE_MESH_SENSOR_STATUS_MIN_INTERVAL_MAX (C 宏), 605
ESP_BLE_MESH_SENSOR_STATUS_TRIGGER_TYPE_CHAR (C 宏), 605
ESP_BLE_MESH_SENSOR_STATUS_TRIGGER_TYPE_UINT16 (C 宏), 605
ESP_BLE_MESH_SENSOR_UNSPECIFIED_NEG_TOLERANCE (C 宏), 604
ESP_BLE_MESH_SENSOR_UNSPECIFIED_POS_TOLERANCE (C 宏), 604
ESP_BLE_MESH_SERVER_AUTO_RSP (C 宏), 408
ESP_BLE_MESH_SERVER_FLAG_MAX (C++ 枚举子), 418
esp_ble_mesh_server_model_send_msg (C++ 函数), 426
ESP_BLE_MESH_SERVER_MODEL_STATE_MAX (C++ 枚举子), 418
esp_ble_mesh_server_model_update_state (C++ 函数), 427
ESP_BLE_MESH_SERVER_MODEL_UPDATE_STATE_COMP_EVT (C++ 枚举子), 419
esp_ble_mesh_server_recv_gen_admin_property_get_t (C++ 类), 506
esp_ble_mesh_server_recv_gen_admin_property_get_t::propert (C++ 成员), 506
esp_ble_mesh_server_recv_gen_admin_property_set_t (C++ 类), 510
esp_ble_mesh_server_recv_gen_admin_property_set_t::propert (C++ 成员), 510
esp_ble_mesh_server_recv_gen_admin_property_set_t::propert (C++ 成员), 510
esp_ble_mesh_server_recv_gen_admin_property_set_t::user_ac (C++ 成员), 510
esp_ble_mesh_server_recv_gen_client_properties_get_t (C++ 类), 506
esp_ble_mesh_server_recv_gen_client_properties_get_t::prop (C++ 成员), 506
esp_ble_mesh_server_recv_gen_def_trans_time_set_t (C++ 类), 508
esp_ble_mesh_server_recv_gen_def_trans_time_set_t::trans_t (C++ 成员), 508
esp_ble_mesh_server_recv_gen_delta_set_t (C++ 类), 507
esp_ble_mesh_server_recv_gen_delta_set_t::delay (C++ 成员), 508
esp_ble_mesh_server_recv_gen_delta_set_t::delta_level (C++ 成员), 507
esp_ble_mesh_server_recv_gen_delta_set_t::op_en (C++ 成员), 507
esp_ble_mesh_server_recv_gen_delta_set_t::tid (C++ 成员), 507
esp_ble_mesh_server_recv_gen_delta_set_t::trans_time (C++ 成员), 508
esp_ble_mesh_server_recv_gen_level_set_t (C++ 类), 507
esp_ble_mesh_server_recv_gen_level_set_t::delay

(C++ 成员), 507
esp_ble_mesh_server_recv_gen_level_set_t::level (C++ 成员), 507
esp_ble_mesh_server_recv_gen_level_set_t::op_en (C++ 成员), 507
esp_ble_mesh_server_recv_gen_level_set_t::tid (C++ 成员), 507
esp_ble_mesh_server_recv_gen_level_set_t::trans_time (C++ 成员), 507
esp_ble_mesh_server_recv_gen_loc_global_set_t (C++ 类), 509
esp_ble_mesh_server_recv_gen_loc_global_set_t::global_altitude (C++ 成员), 509
esp_ble_mesh_server_recv_gen_loc_global_set_t::global_latitude (C++ 成员), 509
esp_ble_mesh_server_recv_gen_loc_global_set_t::global_longitude (C++ 成员), 509
esp_ble_mesh_server_recv_gen_loc_local_set_t (C++ 类), 510
esp_ble_mesh_server_recv_gen_loc_local_set_t::floor_number (C++ 成员), 510
esp_ble_mesh_server_recv_gen_loc_local_set_t::local_altitude (C++ 成员), 510
esp_ble_mesh_server_recv_gen_loc_local_set_t::local_east (C++ 成员), 510
esp_ble_mesh_server_recv_gen_loc_local_set_t::local_north (C++ 成员), 510
esp_ble_mesh_server_recv_gen_loc_local_set_t::uncertainty (C++ 成员), 510
esp_ble_mesh_server_recv_gen_manufacturer_property_set_t (C++ 类), 506
esp_ble_mesh_server_recv_gen_manufacturer_property_set_t::property_id (C++ 成员), 506
esp_ble_mesh_server_recv_gen_manufacturer_property_set_t::op_en (C++ 类), 510
esp_ble_mesh_server_recv_gen_manufacturer_property_set_t::property_id (C++ 成员), 511
esp_ble_mesh_server_recv_gen_manufacturer_property_set_t::user_access (C++ 成员), 511
esp_ble_mesh_server_recv_gen_move_set_t (C++ 类), 508
esp_ble_mesh_server_recv_gen_move_set_t::delay (C++ 成员), 508
esp_ble_mesh_server_recv_gen_move_set_t::delta_level (C++ 成员), 508
esp_ble_mesh_server_recv_gen_move_set_t::op_en (C++ 成员), 508
esp_ble_mesh_server_recv_gen_move_set_t::tid (C++ 成员), 508
esp_ble_mesh_server_recv_gen_move_set_t::trans_time (C++ 成员), 508
esp_ble_mesh_server_recv_gen_onoff_set_t (C++ 类), 506
esp_ble_mesh_server_recv_gen_onoff_set_t::delay (C++ 成员), 507
esp_ble_mesh_server_recv_gen_onoff_set_t::onoff (C++ 成员), 507
esp_ble_mesh_server_recv_gen_onoff_set_t::op_en (C++ 成员), 507
esp_ble_mesh_server_recv_gen_onoff_set_t::tid (C++ 成员), 507
esp_ble_mesh_server_recv_gen_onoff_set_t::trans_time (C++ 成员), 507
esp_ble_mesh_server_recv_gen_onpowerup_set_t (C++ 类), 508
esp_ble_mesh_server_recv_gen_onpowerup_set_t::onpowerup (C++ 成员), 508
esp_ble_mesh_server_recv_gen_power_default_set_t (C++ 类), 509
esp_ble_mesh_server_recv_gen_power_default_set_t::power (C++ 成员), 509
esp_ble_mesh_server_recv_gen_power_level_set_t (C++ 类), 508
esp_ble_mesh_server_recv_gen_power_level_set_t::delay (C++ 成员), 509
esp_ble_mesh_server_recv_gen_power_level_set_t::op_en (C++ 成员), 509
esp_ble_mesh_server_recv_gen_power_level_set_t::power (C++ 成员), 509
esp_ble_mesh_server_recv_gen_power_level_set_t::tid (C++ 成员), 509
esp_ble_mesh_server_recv_gen_power_level_set_t::trans_time (C++ 成员), 509
esp_ble_mesh_server_recv_gen_power_range_set_t

(C++ 类), 509
esp_ble_mesh_server_recv_gen_power_range_set_t (C++ 成员), 509
esp_ble_mesh_server_recv_gen_power_range_set_t::range_max (C++ 成员), 509
esp_ble_mesh_server_recv_gen_user_property_get_t (C++ 类), 506
esp_ble_mesh_server_recv_gen_user_property_get_t::property_id (C++ 成员), 506
esp_ble_mesh_server_recv_gen_user_property_set_t (C++ 类), 510
esp_ble_mesh_server_recv_gen_user_property_set_t::property_id (C++ 成员), 510
esp_ble_mesh_server_recv_gen_user_property_set_t::property_value (C++ 成员), 510
esp_ble_mesh_server_recv_light_ctl_default_set_t (C++ 类), 575
esp_ble_mesh_server_recv_light_ctl_default_set_t::ctl_lightness (C++ 成员), 575
esp_ble_mesh_server_recv_light_ctl_default_set_t::ctl_temperature (C++ 成员), 575
esp_ble_mesh_server_recv_light_ctl_default_set_t::tid (C++ 成员), 575
esp_ble_mesh_server_recv_light_ctl_set_t (C++ 类), 574
esp_ble_mesh_server_recv_light_ctl_set_t::delay (C++ 成员), 574
esp_ble_mesh_server_recv_light_ctl_set_t::delta_uv (C++ 成员), 574
esp_ble_mesh_server_recv_light_ctl_set_t::lightness (C++ 成员), 574
esp_ble_mesh_server_recv_light_ctl_set_t::op_en (C++ 成员), 574
esp_ble_mesh_server_recv_light_ctl_set_t::temperature (C++ 成员), 574
esp_ble_mesh_server_recv_light_ctl_set_t::tid (C++ 成员), 574
esp_ble_mesh_server_recv_light_ctl_set_t::trans_time (C++ 成员), 574
esp_ble_mesh_server_recv_light_ctl_temperature_range_set_t (C++ 类), 575
esp_ble_mesh_server_recv_light_ctl_temperature_range_set_t::range_max (C++ 成员), 575
esp_ble_mesh_server_recv_light_ctl_temperature_range_set_t::range_min (C++ 成员), 575
esp_ble_mesh_server_recv_light_ctl_temperature_set_t (C++ 类), 574
esp_ble_mesh_server_recv_light_ctl_temperature_set_t::delay (C++ 成员), 575
esp_ble_mesh_server_recv_light_ctl_temperature_set_t::delta_uv (C++ 成员), 575
esp_ble_mesh_server_recv_light_ctl_temperature_set_t::op_en (C++ 成员), 575
esp_ble_mesh_server_recv_light_ctl_temperature_set_t::temperature (C++ 成员), 575
esp_ble_mesh_server_recv_light_ctl_temperature_set_t::tid (C++ 成员), 575
esp_ble_mesh_server_recv_light_ctl_temperature_set_t::trans_time (C++ 成员), 575
esp_ble_mesh_server_recv_light_hsl_default_set_t (C++ 类), 577
esp_ble_mesh_server_recv_light_hsl_default_set_t::hue (C++ 成员), 577
esp_ble_mesh_server_recv_light_hsl_default_set_t::lightness (C++ 成员), 577
esp_ble_mesh_server_recv_light_hsl_default_set_t::saturation (C++ 成员), 577
esp_ble_mesh_server_recv_light_hsl_hue_set_t (C++ 类), 576
esp_ble_mesh_server_recv_light_hsl_hue_set_t::delay (C++ 成员), 576
esp_ble_mesh_server_recv_light_hsl_hue_set_t::hue (C++ 成员), 576
esp_ble_mesh_server_recv_light_hsl_hue_set_t::op_en (C++ 成员), 576
esp_ble_mesh_server_recv_light_hsl_hue_set_t::tid (C++ 成员), 576
esp_ble_mesh_server_recv_light_hsl_hue_set_t::trans_time (C++ 成员), 576
esp_ble_mesh_server_recv_light_hsl_range_set_t (C++ 类), 577
esp_ble_mesh_server_recv_light_hsl_range_set_t::hue_range_max (C++ 成员), 577
esp_ble_mesh_server_recv_light_hsl_range_set_t::hue_range_min (C++ 成员), 577

(C++ 成员), 577
esp_ble_mesh_server_recv_light_hsl_range_set_t::hue_range_max
(C++ 成员), 577
esp_ble_mesh_server_recv_light_hsl_range_set_t::hue_range_min
(C++ 成员), 577
esp_ble_mesh_server_recv_light_hsl_saturation_set_t
(C++ 类), 576
esp_ble_mesh_server_recv_light_hsl_saturation_set_t::delay
(C++ 成员), 577
esp_ble_mesh_server_recv_light_hsl_saturation_set_t::op_en
(C++ 成员), 577
esp_ble_mesh_server_recv_light_hsl_saturation_set_t::saturation
(C++ 成员), 577
esp_ble_mesh_server_recv_light_hsl_saturation_set_t::tid
(C++ 成员), 577
esp_ble_mesh_server_recv_light_hsl_saturation_set_t::trans_time
(C++ 成员), 577
esp_ble_mesh_server_recv_light_hsl_set_t
(C++ 类), 575
esp_ble_mesh_server_recv_light_hsl_set_t::delay
(C++ 成员), 576
esp_ble_mesh_server_recv_light_hsl_set_t::hue
(C++ 成员), 576
esp_ble_mesh_server_recv_light_hsl_set_t::lightness
(C++ 成员), 576
esp_ble_mesh_server_recv_light_hsl_set_t::op_en
(C++ 成员), 576
esp_ble_mesh_server_recv_light_hsl_set_t::saturation
(C++ 成员), 576
esp_ble_mesh_server_recv_light_hsl_set_t::tid
(C++ 成员), 576
esp_ble_mesh_server_recv_light_hsl_set_t::trans_time
(C++ 成员), 576
esp_ble_mesh_server_recv_light_lc_light_onoff_set_t
(C++ 类), 579
esp_ble_mesh_server_recv_light_lc_light_onoff_set_t::delay
(C++ 成员), 579
esp_ble_mesh_server_recv_light_lc_light_onoff_set_t::light_onoff
(C++ 成员), 579
esp_ble_mesh_server_recv_light_lc_light_onoff_set_t::op_en
(C++ 成员), 579
esp_ble_mesh_server_recv_light_lc_light_onoff_set_t::tid
(C++ 成员), 579
esp_ble_mesh_server_recv_light_lc_light_onoff_set_t::trans_time
(C++ 成员), 579
esp_ble_mesh_server_recv_light_lc_mode_set_t
(C++ 类), 579
esp_ble_mesh_server_recv_light_lc_mode_set_t::mode
(C++ 成员), 579
esp_ble_mesh_server_recv_light_lc_om_set_t
(C++ 类), 579
esp_ble_mesh_server_recv_light_lc_om_set_t::mode
(C++ 成员), 579
esp_ble_mesh_server_recv_light_lc_property_get_t
(C++ 类), 572
esp_ble_mesh_server_recv_light_lc_property_get_t::property_id
(C++ 成员), 573
esp_ble_mesh_server_recv_light_lc_property_set_t
(C++ 类), 579
esp_ble_mesh_server_recv_light_lc_property_set_t::property_id
(C++ 成员), 580
esp_ble_mesh_server_recv_light_lc_property_set_t::property_val
(C++ 成员), 580
esp_ble_mesh_server_recv_light_lightness_default_set_t
(C++ 类), 573
esp_ble_mesh_server_recv_light_lightness_default_set_t::lightness
(C++ 成员), 574
esp_ble_mesh_server_recv_light_lightness_linear_set_t
(C++ 类), 573
esp_ble_mesh_server_recv_light_lightness_linear_set_t::delay
(C++ 成员), 573
esp_ble_mesh_server_recv_light_lightness_linear_set_t::lightness
(C++ 成员), 573
esp_ble_mesh_server_recv_light_lightness_linear_set_t::op_en
(C++ 成员), 573
esp_ble_mesh_server_recv_light_lightness_linear_set_t::tid
(C++ 成员), 573
esp_ble_mesh_server_recv_light_lightness_linear_set_t::trans_time
(C++ 成员), 573
esp_ble_mesh_server_recv_light_lightness_range_set_t
(C++ 类), 574
esp_ble_mesh_server_recv_light_lightness_range_set_t::range_max
(C++ 成员), 574
esp_ble_mesh_server_recv_light_lightness_range_set_t::range_min

(C++ 成员), 574
esp_ble_mesh_server_recv_light_lightness_set_t (C++ 类), 573
esp_ble_mesh_server_recv_light_lightness_set_t::delay (C++ 成员), 573
esp_ble_mesh_server_recv_light_lightness_set_t::lightness (C++ 成员), 573
esp_ble_mesh_server_recv_light_lightness_set_t::op_en (C++ 成员), 573
esp_ble_mesh_server_recv_light_lightness_set_t::tid (C++ 成员), 573
esp_ble_mesh_server_recv_light_lightness_set_t::trans_time (C++ 成员), 573
esp_ble_mesh_server_recv_light_xyl_default_set_t (C++ 类), 578
esp_ble_mesh_server_recv_light_xyl_default_set_t::lightness (C++ 成员), 578
esp_ble_mesh_server_recv_light_xyl_default_set_t::x (C++ 成员), 578
esp_ble_mesh_server_recv_light_xyl_default_set_t::y (C++ 成员), 578
esp_ble_mesh_server_recv_light_xyl_range_set_t (C++ 类), 578
esp_ble_mesh_server_recv_light_xyl_range_set_t::x_range_max (C++ 成员), 578
esp_ble_mesh_server_recv_light_xyl_range_set_t::x_range_min (C++ 成员), 578
esp_ble_mesh_server_recv_light_xyl_range_set_t::y_range_max (C++ 成员), 579
esp_ble_mesh_server_recv_light_xyl_range_set_t::y_range_min (C++ 成员), 579
esp_ble_mesh_server_recv_light_xyl_set_t (C++ 类), 577
esp_ble_mesh_server_recv_light_xyl_set_t::delay (C++ 成员), 578
esp_ble_mesh_server_recv_light_xyl_set_t::lightness (C++ 成员), 578
esp_ble_mesh_server_recv_light_xyl_set_t::op_en (C++ 成员), 578
esp_ble_mesh_server_recv_light_xyl_set_t::tid (C++ 成员), 578
esp_ble_mesh_server_recv_light_xyl_set_t::trans_time (C++ 成员), 578
esp_ble_mesh_server_recv_light_xyl_set_t::x (C++ 成员), 578
esp_ble_mesh_server_recv_light_xyl_set_t::y (C++ 成员), 578
esp_ble_mesh_server_recv_scene_delete_t (C++ 类), 630
esp_ble_mesh_server_recv_scene_delete_t::scene_number (C++ 成员), 630
esp_ble_mesh_server_recv_scene_recall_t (C++ 类), 630
esp_ble_mesh_server_recv_scene_recall_t::delay (C++ 成员), 630
esp_ble_mesh_server_recv_scene_recall_t::op_en (C++ 成员), 630
esp_ble_mesh_server_recv_scene_recall_t::scene_number (C++ 成员), 630
esp_ble_mesh_server_recv_scene_recall_t::tid (C++ 成员), 630
esp_ble_mesh_server_recv_scene_recall_t::trans_time (C++ 成员), 630
esp_ble_mesh_server_recv_scene_store_t (C++ 类), 629
esp_ble_mesh_server_recv_scene_store_t::scene_number (C++ 成员), 630
esp_ble_mesh_server_recv_scheduler_act_get_t (C++ 类), 628
esp_ble_mesh_server_recv_scheduler_act_get_t::index (C++ 成员), 628
esp_ble_mesh_server_recv_scheduler_act_set_t (C++ 类), 630
esp_ble_mesh_server_recv_scheduler_act_set_t::action (C++ 成员), 631
esp_ble_mesh_server_recv_scheduler_act_set_t::day (C++ 成员), 630
esp_ble_mesh_server_recv_scheduler_act_set_t::day_of_week (C++ 成员), 631
esp_ble_mesh_server_recv_scheduler_act_set_t::hour (C++ 成员), 631
esp_ble_mesh_server_recv_scheduler_act_set_t::index (C++ 成员), 630
esp_ble_mesh_server_recv_scheduler_act_set_t::minute

(C++ 成员), 631
esp_ble_mesh_server_recv_scheduler_act_set_t::esp_ble_mesh_server_recv_sensor_series_get_t::property_id
(C++ 成员), 630
esp_ble_mesh_server_recv_scheduler_act_set_t::esp_ble_mesh_server_recv_sensor_series_get_t::raw_value
(C++ 成员), 631
esp_ble_mesh_server_recv_scheduler_act_set_t::esp_ble_mesh_server_recv_sensor_setting_get_t
(C++ 成员), 631
esp_ble_mesh_server_recv_scheduler_act_set_t::esp_ble_mesh_server_recv_sensor_setting_get_t::property_id
(C++ 成员), 631
esp_ble_mesh_server_recv_scheduler_act_set_t::esp_ble_mesh_server_recv_sensor_setting_get_t::setting_pro
(C++ 成员), 630
esp_ble_mesh_server_recv_sensor_cadence_get_t esp_ble_mesh_server_recv_sensor_setting_set_t
(C++ 类), 601
esp_ble_mesh_server_recv_sensor_cadence_get_t::esp_ble_mesh_server_recv_sensor_setting_set_t::property_id
(C++ 成员), 601
esp_ble_mesh_server_recv_sensor_cadence_set_t esp_ble_mesh_server_recv_sensor_setting_set_t::setting_pro
(C++ 类), 602
esp_ble_mesh_server_recv_sensor_cadence_set_t::esp_ble_mesh_server_recv_sensor_setting_set_t::setting_raw
(C++ 成员), 602
esp_ble_mesh_server_recv_sensor_cadence_set_t::esp_ble_mesh_server_recv_sensor_settings_get_t
(C++ 成员), 602
esp_ble_mesh_server_recv_sensor_column_get_t esp_ble_mesh_server_recv_sensor_settings_get_t::property_i
(C++ 类), 602
esp_ble_mesh_server_recv_sensor_column_get_t::esp_ble_mesh_server_recv_sensor_status_t
(C++ 成员), 602
esp_ble_mesh_server_recv_sensor_column_get_t::esp_ble_mesh_server_recv_sensor_status_t::data
(C++ 成员), 602
esp_ble_mesh_server_recv_sensor_descriptor_get_t esp_ble_mesh_server_recv_tai_utc_delta_set_t
(C++ 类), 601
esp_ble_mesh_server_recv_sensor_descriptor_get_t::esp_ble_mesh_server_recv_tai_utc_delta_set_t::padding
(C++ 成员), 601
esp_ble_mesh_server_recv_sensor_descriptor_get_t::esp_ble_mesh_server_recv_tai_utc_delta_set_t::tai_delta_ch
(C++ 成员), 601
esp_ble_mesh_server_recv_sensor_get_t (C++ esp_ble_mesh_server_recv_tai_utc_delta_set_t::tai_utc_delt
类), 602
esp_ble_mesh_server_recv_sensor_get_t::op_en esp_ble_mesh_server_recv_time_role_set_t
(C++ 成员), 602
esp_ble_mesh_server_recv_sensor_get_t::property_id esp_ble_mesh_server_recv_time_role_set_t::time_role
(C++ 成员), 602
esp_ble_mesh_server_recv_sensor_series_get_t esp_ble_mesh_server_recv_time_set_t (C++
(C++ 类), 602
esp_ble_mesh_server_recv_sensor_series_get_t::esp_ble_mesh_server_recv_time_set_t::subsecond

(C++ 成员), 628
esp_ble_mesh_server_recv_time_set_t::tai_seconds (C++ 成员), 628
esp_ble_mesh_server_recv_time_set_t::tai_utc_delta (C++ 成员), 629
esp_ble_mesh_server_recv_time_set_t::time_authority (C++ 成员), 628
esp_ble_mesh_server_recv_time_set_t::time_zone_offset (C++ 成员), 629
esp_ble_mesh_server_recv_time_set_t::uncertainty (C++ 成员), 628
esp_ble_mesh_server_recv_time_status_t (C++ 类), 631
esp_ble_mesh_server_recv_time_status_t::subsecond (C++ 成员), 631
esp_ble_mesh_server_recv_time_status_t::tai_seconds (C++ 成员), 631
esp_ble_mesh_server_recv_time_status_t::tai_utc_delta (C++ 成员), 631
esp_ble_mesh_server_recv_time_status_t::time_authority (C++ 成员), 631
esp_ble_mesh_server_recv_time_status_t::time_zone_offset (C++ 成员), 631
esp_ble_mesh_server_recv_time_status_t::uncertainty (C++ 成员), 631
esp_ble_mesh_server_recv_time_zone_set_t (C++ 类), 629
esp_ble_mesh_server_recv_time_zone_set_t::tai_zone_change (C++ 成员), 629
esp_ble_mesh_server_recv_time_zone_set_t::time_zone_offset_new (C++ 成员), 629
ESP_BLE_MESH_SERVER_RSP_BY_APP (C 宏), 408
esp_ble_mesh_server_rsp_ctrl_t (C++ 类), 388
esp_ble_mesh_server_rsp_ctrl_t::get_auto_rsp (C++ 成员), 388
esp_ble_mesh_server_rsp_ctrl_t::set_auto_rsp (C++ 成员), 388
esp_ble_mesh_server_rsp_ctrl_t::status_auto_rsp (C++ 成员), 388
esp_ble_mesh_server_state_type_t (C++ 类型), 418
esp_ble_mesh_server_state_value_t (C++ 类型), 373
esp_ble_mesh_server_state_value_t::delta_uv (C++ 成员), 374
esp_ble_mesh_server_state_value_t::gen_level (C++ 成员), 373
esp_ble_mesh_server_state_value_t::gen_onoff (C++ 成员), 373
esp_ble_mesh_server_state_value_t::gen_onpowerup (C++ 成员), 373
esp_ble_mesh_server_state_value_t::gen_power_actual (C++ 成员), 373
esp_ble_mesh_server_state_value_t::hue (C++ 成员), 374
esp_ble_mesh_server_state_value_t::level (C++ 成员), 373
esp_ble_mesh_server_state_value_t::light_ctl_lightness (C++ 成员), 374
esp_ble_mesh_server_state_value_t::light_ctl_temp_delta_uv (C++ 成员), 374
esp_ble_mesh_server_state_value_t::light_hsl_hue (C++ 成员), 374
esp_ble_mesh_server_state_value_t::light_hsl_lightness (C++ 成员), 374
esp_ble_mesh_server_state_value_t::light_hsl_saturation (C++ 成员), 374
esp_ble_mesh_server_state_value_t::light_lc_light_onoff (C++ 成员), 374
esp_ble_mesh_server_state_value_t::light_lightness_actual (C++ 成员), 374
esp_ble_mesh_server_state_value_t::light_lightness_linear (C++ 成员), 374
esp_ble_mesh_server_state_value_t::light_xyl_lightness (C++ 成员), 374
esp_ble_mesh_server_state_value_t::lightness (C++ 成员), 373
esp_ble_mesh_server_state_value_t::onoff (C++ 成员), 373
esp_ble_mesh_server_state_value_t::onpowerup (C++ 成员), 373
esp_ble_mesh_server_state_value_t::power (C++ 成员), 373
esp_ble_mesh_server_state_value_t::saturation

(C++ 成员), 374
esp_ble_mesh_server_state_value_t::temperature (C++ 成员), 374
ESP_BLE_MESH_SERVER_TRANS_TIMER_START (C++ 枚举子), 417
esp_ble_mesh_set_fast_prov_action (C++ 函数), 443
ESP_BLE_MESH_SET_FAST_PROV_ACTION_COMP_EVT (C++ 枚举子), 416
esp_ble_mesh_set_fast_prov_info (C++ 函数), 443
ESP_BLE_MESH_SET_FAST_PROV_INFO_COMP_EVT (C++ 枚举子), 416
esp_ble_mesh_set_unprovisioned_device_name (C++ 函数), 438
ESP_BLE_MESH_SETTINGS_UID_SIZE (C 宏), 389
ESP_BLE_MESH_SIG_MODEL (C 宏), 392
ESP_BLE_MESH_START_BLE_ADVERTISING_COMP_EVT (C++ 枚举子), 417
esp_ble_mesh_state_change_cfg_appkey_add_t (C++ 类), 474
esp_ble_mesh_state_change_cfg_appkey_add_t::app_idx (C++ 成员), 474
esp_ble_mesh_state_change_cfg_appkey_add_t::appkey (C++ 成员), 474
esp_ble_mesh_state_change_cfg_appkey_add_t::net_idx (C++ 成员), 474
esp_ble_mesh_state_change_cfg_appkey_delete_t (C++ 类), 474
esp_ble_mesh_state_change_cfg_appkey_delete_t::app_idx (C++ 成员), 475
esp_ble_mesh_state_change_cfg_appkey_delete_t::net_idx (C++ 成员), 475
esp_ble_mesh_state_change_cfg_appkey_update_t (C++ 类), 474
esp_ble_mesh_state_change_cfg_appkey_update_t::app_idx (C++ 成员), 474
esp_ble_mesh_state_change_cfg_appkey_update_t::appkey (C++ 成员), 474
esp_ble_mesh_state_change_cfg_appkey_update_t::net_idx (C++ 成员), 474
esp_ble_mesh_state_change_cfg_kr_phase_set_t (C++ 类), 475
esp_ble_mesh_state_change_cfg_kr_phase_set_t::kr_phase (C++ 成员), 476
esp_ble_mesh_state_change_cfg_kr_phase_set_t::net_idx (C++ 成员), 476
esp_ble_mesh_state_change_cfg_mod_pub_set_t (C++ 类), 472
esp_ble_mesh_state_change_cfg_mod_pub_set_t::app_idx (C++ 成员), 472
esp_ble_mesh_state_change_cfg_mod_pub_set_t::company_id (C++ 成员), 472
esp_ble_mesh_state_change_cfg_mod_pub_set_t::cred_flag (C++ 成员), 472
esp_ble_mesh_state_change_cfg_mod_pub_set_t::element_addr (C++ 成员), 472
esp_ble_mesh_state_change_cfg_mod_pub_set_t::model_id (C++ 成员), 472
esp_ble_mesh_state_change_cfg_mod_pub_set_t::pub_addr (C++ 成员), 472
esp_ble_mesh_state_change_cfg_mod_pub_set_t::pub_period (C++ 成员), 472
esp_ble_mesh_state_change_cfg_mod_pub_set_t::pub_retransmi (C++ 成员), 472
esp_ble_mesh_state_change_cfg_mod_pub_set_t::pub_ttl (C++ 成员), 472
esp_ble_mesh_state_change_cfg_model_app_bind_t (C++ 类), 475
esp_ble_mesh_state_change_cfg_model_app_bind_t::app_idx (C++ 成员), 475
esp_ble_mesh_state_change_cfg_model_app_bind_t::company_id (C++ 成员), 475
esp_ble_mesh_state_change_cfg_model_app_bind_t::element_ad (C++ 成员), 475
esp_ble_mesh_state_change_cfg_model_app_bind_t::model_id (C++ 成员), 475
esp_ble_mesh_state_change_cfg_model_app_unbind_t (C++ 类), 475
esp_ble_mesh_state_change_cfg_model_app_unbind_t::app_idx (C++ 成员), 475
esp_ble_mesh_state_change_cfg_model_app_unbind_t::company_ (C++ 成员), 475
esp_ble_mesh_state_change_cfg_model_app_unbind_t::element_

(C++ 成员), 475
esp_ble_mesh_state_change_cfg_model_app_unbind_t (C++ 成员), 475
esp_ble_mesh_state_change_cfg_model_sub_add_t (C++ 类), 472
esp_ble_mesh_state_change_cfg_model_sub_add_t::company_id (C++ 成员), 473
esp_ble_mesh_state_change_cfg_model_sub_add_t::element_addr (C++ 成员), 473
esp_ble_mesh_state_change_cfg_model_sub_add_t::model_id (C++ 成员), 473
esp_ble_mesh_state_change_cfg_model_sub_add_t::sub_addr (C++ 成员), 473
esp_ble_mesh_state_change_cfg_model_sub_delete_t (C++ 类), 473
esp_ble_mesh_state_change_cfg_model_sub_delete_t::company_id (C++ 成员), 473
esp_ble_mesh_state_change_cfg_model_sub_delete_t::element_addr (C++ 成员), 473
esp_ble_mesh_state_change_cfg_model_sub_delete_t::model_id (C++ 成员), 473
esp_ble_mesh_state_change_cfg_model_sub_delete_t::sub_addr (C++ 成员), 473
esp_ble_mesh_state_change_cfg_netkey_add_t (C++ 类), 473
esp_ble_mesh_state_change_cfg_netkey_add_t::net_idx (C++ 成员), 473
esp_ble_mesh_state_change_cfg_netkey_add_t::net_key (C++ 成员), 473
esp_ble_mesh_state_change_cfg_netkey_delete_t (C++ 类), 474
esp_ble_mesh_state_change_cfg_netkey_delete_t::net_idx (C++ 成员), 474
esp_ble_mesh_state_change_cfg_netkey_update_t (C++ 类), 473
esp_ble_mesh_state_change_cfg_netkey_update_t::net_idx (C++ 成员), 474
esp_ble_mesh_state_change_cfg_netkey_update_t::net_key (C++ 成员), 474
esp_ble_mesh_state_change_gen_admin_property_set_t (C++ 类), 505
esp_ble_mesh_state_change_gen_admin_property_set_t::access (C++ 成员), 505
esp_ble_mesh_state_change_gen_admin_property_set_t::id (C++ 成员), 505
esp_ble_mesh_state_change_gen_admin_property_set_t::value (C++ 成员), 505
esp_ble_mesh_state_change_gen_def_trans_time_set_t (C++ 类), 503
esp_ble_mesh_state_change_gen_def_trans_time_set_t::trans_time (C++ 成员), 503
esp_ble_mesh_state_change_gen_delta_set_t (C++ 类), 503
esp_ble_mesh_state_change_gen_delta_set_t::level (C++ 成员), 503
esp_ble_mesh_state_change_gen_level_set_t (C++ 类), 503
esp_ble_mesh_state_change_gen_level_set_t::level (C++ 成员), 503
esp_ble_mesh_state_change_gen_loc_global_set_t (C++ 类), 504
esp_ble_mesh_state_change_gen_loc_global_set_t::altitude (C++ 成员), 504
esp_ble_mesh_state_change_gen_loc_global_set_t::latitude (C++ 成员), 504
esp_ble_mesh_state_change_gen_loc_global_set_t::longitude (C++ 成员), 504
esp_ble_mesh_state_change_gen_loc_local_set_t (C++ 类), 504
esp_ble_mesh_state_change_gen_loc_local_set_t::altitude (C++ 成员), 505
esp_ble_mesh_state_change_gen_loc_local_set_t::east (C++ 成员), 505
esp_ble_mesh_state_change_gen_loc_local_set_t::floor_number (C++ 成员), 505
esp_ble_mesh_state_change_gen_loc_local_set_t::north (C++ 成员), 505
esp_ble_mesh_state_change_gen_loc_local_set_t::uncertainty (C++ 成员), 505
esp_ble_mesh_state_change_gen_manu_property_set_t (C++ 类), 505
esp_ble_mesh_state_change_gen_manu_property_set_t::access (C++ 成员), 506
esp_ble_mesh_state_change_gen_manu_property_set_t::id

(C++ 成员), 506
esp_ble_mesh_state_change_gen_move_set_t (C++ 类), 503
esp_ble_mesh_state_change_gen_move_set_t::level (C++ 成员), 503
esp_ble_mesh_state_change_gen_onoff_set_t (C++ 类), 502
esp_ble_mesh_state_change_gen_onoff_set_t::onoff (C++ 成员), 503
esp_ble_mesh_state_change_gen_onpowerup_set_t (C++ 类), 503
esp_ble_mesh_state_change_gen_onpowerup_set_t::onpowerup (C++ 成员), 504
esp_ble_mesh_state_change_gen_power_default_set_t (C++ 类), 504
esp_ble_mesh_state_change_gen_power_default_set_t::power (C++ 成员), 504
esp_ble_mesh_state_change_gen_power_level_set_t (C++ 类), 504
esp_ble_mesh_state_change_gen_power_level_set_t::power (C++ 成员), 504
esp_ble_mesh_state_change_gen_power_range_set_t (C++ 类), 504
esp_ble_mesh_state_change_gen_power_range_set_t::range_max (C++ 成员), 504
esp_ble_mesh_state_change_gen_power_range_set_t::range_min (C++ 成员), 504
esp_ble_mesh_state_change_gen_user_property_set_t (C++ 类), 505
esp_ble_mesh_state_change_gen_user_property_set_t::bld (C++ 成员), 505
esp_ble_mesh_state_change_gen_user_property_set_t::value (C++ 成员), 505
esp_ble_mesh_state_change_light_ctl_default_set_t (C++ 类), 569
esp_ble_mesh_state_change_light_ctl_default_set_t::delta_uv (C++ 成员), 569
esp_ble_mesh_state_change_light_ctl_default_set_t::lightness (C++ 成员), 569
esp_ble_mesh_state_change_light_ctl_default_set_t::temperature (C++ 成员), 569
esp_ble_mesh_state_change_light_ctl_set_t (C++ 类), 568
esp_ble_mesh_state_change_light_ctl_set_t::delta_uv (C++ 成员), 568
esp_ble_mesh_state_change_light_ctl_set_t::lightness (C++ 成员), 568
esp_ble_mesh_state_change_light_ctl_set_t::temperature (C++ 成员), 568
esp_ble_mesh_state_change_light_ctl_temperature_range_set_ (C++ 类), 568
esp_ble_mesh_state_change_light_ctl_temperature_range_set_ (C++ 成员), 569
esp_ble_mesh_state_change_light_ctl_temperature_range_set_ (C++ 成员), 569
esp_ble_mesh_state_change_light_ctl_temperature_set_t (C++ 类), 568
esp_ble_mesh_state_change_light_ctl_temperature_set_t::del (C++ 成员), 568
esp_ble_mesh_state_change_light_ctl_temperature_set_t::tem (C++ 成员), 568
esp_ble_mesh_state_change_light_hsl_default_set_t (C++ 类), 570
esp_ble_mesh_state_change_light_hsl_default_set_t::hue (C++ 成员), 570
esp_ble_mesh_state_change_light_hsl_default_set_t::lightne (C++ 成员), 570
esp_ble_mesh_state_change_light_hsl_default_set_t::saturat (C++ 成员), 570
esp_ble_mesh_state_change_light_hsl_hue_set_t (C++ 类), 569
esp_ble_mesh_state_change_light_hsl_hue_set_t::hue (C++ 成员), 569
esp_ble_mesh_state_change_light_hsl_range_set_t (C++ 类), 570
esp_ble_mesh_state_change_light_hsl_range_set_t::hue_range (C++ 成员), 570
esp_ble_mesh_state_change_light_hsl_range_set_t::hue_range (C++ 成员), 570
esp_ble_mesh_state_change_light_hsl_range_set_t::saturatio (C++ 成员), 570
esp_ble_mesh_state_change_light_hsl_range_set_t::saturatio (C++ 成员), 570
esp_ble_mesh_state_change_light_hsl_saturation_set_t

(C++ 类), 569
esp_ble_mesh_state_change_light_hsl_saturation_set_t (C++ 成员), 570
esp_ble_mesh_state_change_light_hsl_set_t (C++ 类), 569
esp_ble_mesh_state_change_light_hsl_set_t::hue (C++ 成员), 569
esp_ble_mesh_state_change_light_hsl_set_t::lightness (C++ 成员), 569
esp_ble_mesh_state_change_light_hsl_set_t::saturation (C++ 成员), 569
esp_ble_mesh_state_change_light_lc_light_onoff_set_t (C++ 类), 572
esp_ble_mesh_state_change_light_lc_light_onoff_set_t::onoff (C++ 成员), 572
esp_ble_mesh_state_change_light_lc_mode_set_t (C++ 类), 571
esp_ble_mesh_state_change_light_lc_mode_set_t::mode (C++ 成员), 571
esp_ble_mesh_state_change_light_lc_om_set_t (C++ 类), 571
esp_ble_mesh_state_change_light_lc_om_set_t::mode (C++ 成员), 572
esp_ble_mesh_state_change_light_lc_property_set_t (C++ 类), 572
esp_ble_mesh_state_change_light_lc_property_set_t::property_id (C++ 成员), 572
esp_ble_mesh_state_change_light_lc_property_set_t::property_value (C++ 成员), 572
esp_ble_mesh_state_change_light_lightness_default_set_t (C++ 类), 567
esp_ble_mesh_state_change_light_lightness_default_set_t::lightness (C++ 成员), 568
esp_ble_mesh_state_change_light_lightness_linear_set_t (C++ 类), 567
esp_ble_mesh_state_change_light_lightness_linear_set_t::lightness (C++ 成员), 567
esp_ble_mesh_state_change_light_lightness_range_set_t (C++ 类), 568
esp_ble_mesh_state_change_light_lightness_range_set_t::range_max (C++ 成员), 568
esp_ble_mesh_state_change_light_lightness_range_set_t::range_min (C++ 成员), 568
esp_ble_mesh_state_change_light_lightness_set_t (C++ 类), 567
esp_ble_mesh_state_change_light_lightness_set_t::lightness (C++ 成员), 567
esp_ble_mesh_state_change_light_xyl_default_set_t (C++ 类), 571
esp_ble_mesh_state_change_light_xyl_default_set_t::lightness (C++ 成员), 571
esp_ble_mesh_state_change_light_xyl_default_set_t::x (C++ 成员), 571
esp_ble_mesh_state_change_light_xyl_default_set_t::y (C++ 成员), 571
esp_ble_mesh_state_change_light_xyl_range_set_t (C++ 类), 571
esp_ble_mesh_state_change_light_xyl_range_set_t::x_range_max (C++ 成员), 571
esp_ble_mesh_state_change_light_xyl_range_set_t::x_range_min (C++ 成员), 571
esp_ble_mesh_state_change_light_xyl_range_set_t::y_range_max (C++ 成员), 571
esp_ble_mesh_state_change_light_xyl_range_set_t::y_range_min (C++ 成员), 571
esp_ble_mesh_state_change_light_xyl_set_t (C++ 类), 570
esp_ble_mesh_state_change_light_xyl_set_t::lightness (C++ 成员), 570
esp_ble_mesh_state_change_light_xyl_set_t::x (C++ 成员), 570
esp_ble_mesh_state_change_light_xyl_set_t::y (C++ 成员), 570
esp_ble_mesh_state_change_scene_delete_t (C++ 类), 627
esp_ble_mesh_state_change_scene_delete_t::scene_number (C++ 成员), 627
esp_ble_mesh_state_change_scene_recall_t (C++ 类), 627
esp_ble_mesh_state_change_scene_recall_t::scene_number (C++ 成员), 627
esp_ble_mesh_state_change_scene_store_t (C++ 类), 627
esp_ble_mesh_state_change_scene_store_t::scene_number

(C++ 成员), 627
esp_ble_mesh_state_change_scheduler_act_set_t (C++ 类), 627
esp_ble_mesh_state_change_scheduler_act_set_t::action (C++ 成员), 628
esp_ble_mesh_state_change_scheduler_act_set_t::day (C++ 成员), 628
esp_ble_mesh_state_change_scheduler_act_set_t::day_of_week (C++ 成员), 628
esp_ble_mesh_state_change_scheduler_act_set_t::hour (C++ 成员), 628
esp_ble_mesh_state_change_scheduler_act_set_t::index (C++ 成员), 627
esp_ble_mesh_state_change_scheduler_act_set_t::minute (C++ 成员), 628
esp_ble_mesh_state_change_scheduler_act_set_t::month (C++ 成员), 627
esp_ble_mesh_state_change_scheduler_act_set_t::scene_number (C++ 成员), 628
esp_ble_mesh_state_change_scheduler_act_set_t::second (C++ 成员), 628
esp_ble_mesh_state_change_scheduler_act_set_t::trans_time (C++ 成员), 628
esp_ble_mesh_state_change_scheduler_act_set_t::year (C++ 成员), 627
esp_ble_mesh_state_change_sensor_cadence_set_t (C++ 类), 600
esp_ble_mesh_state_change_sensor_cadence_set_t::fast_cadence_high (C++ 成员), 600
esp_ble_mesh_state_change_sensor_cadence_set_t::fast_cadence_low (C++ 成员), 600
esp_ble_mesh_state_change_sensor_cadence_set_t::min_interval (C++ 成员), 600
esp_ble_mesh_state_change_sensor_cadence_set_t::period_divisor (C++ 成员), 600
esp_ble_mesh_state_change_sensor_cadence_set_t::property_id (C++ 成员), 600
esp_ble_mesh_state_change_sensor_cadence_set_t::trigger_delta_down (C++ 成员), 600
esp_ble_mesh_state_change_sensor_cadence_set_t::trigger_delta_up (C++ 成员), 600
esp_ble_mesh_state_change_sensor_cadence_set_t::trigger_type (C++ 成员), 600
esp_ble_mesh_state_change_sensor_setting_set_t (C++ 类), 600
esp_ble_mesh_state_change_sensor_setting_set_t::property_id (C++ 成员), 601
esp_ble_mesh_state_change_sensor_setting_set_t::setting_property_id (C++ 成员), 601
esp_ble_mesh_state_change_sensor_setting_set_t::setting_value (C++ 成员), 601
esp_ble_mesh_state_change_sensor_status_t (C++ 类), 572
esp_ble_mesh_state_change_sensor_status_t::ambient_luxlevel_prec (C++ 成员), 572
esp_ble_mesh_state_change_sensor_status_t::occupancy (C++ 成员), 572
esp_ble_mesh_state_change_sensor_status_t::property_id (C++ 成员), 572
esp_ble_mesh_state_change_sensor_status_t::set_occupancy_to (C++ 成员), 572
esp_ble_mesh_state_change_sensor_status_t::state (C++ 成员), 572
esp_ble_mesh_state_change_tai_utc_delta_set_t (C++ 类), 626
esp_ble_mesh_state_change_tai_utc_delta_set_t::tai_delta_curr (C++ 成员), 626
esp_ble_mesh_state_change_tai_utc_delta_set_t::tai_utc_delta (C++ 成员), 626
esp_ble_mesh_state_change_time_role_set_t (C++ 类), 627
esp_ble_mesh_state_change_time_role_set_t::time_role (C++ 成员), 627
esp_ble_mesh_state_change_time_set_t (C++ 类), 625
esp_ble_mesh_state_change_time_set_t::subsecond (C++ 成员), 625
esp_ble_mesh_state_change_time_set_t::tai_seconds (C++ 成员), 625
esp_ble_mesh_state_change_time_set_t::tai_utc_delta_curr (C++ 成员), 625
esp_ble_mesh_state_change_time_set_t::time_authority (C++ 成员), 625
esp_ble_mesh_state_change_time_set_t::time_zone_offset_curr

(C++ 成员), 626
esp_ble_mesh_state_change_time_set_t::uncertainty (C++ 成员), 625
esp_ble_mesh_state_change_time_status_t (C++ 类), 626
esp_ble_mesh_state_change_time_status_t::subscribe (C++ 成员), 626
esp_ble_mesh_state_change_time_status_t::tai_seconds (C++ 成员), 626
esp_ble_mesh_state_change_time_status_t::tai_utc_delta (C++ 成员), 626
esp_ble_mesh_state_change_time_status_t::time_authority (C++ 成员), 626
esp_ble_mesh_state_change_time_status_t::time_zone_offset (C++ 成员), 626
esp_ble_mesh_state_change_time_status_t::uncertainty (C++ 成员), 626
esp_ble_mesh_state_change_time_zone_set_t (C++ 类), 626
esp_ble_mesh_state_change_time_zone_set_t::tai_zone_change (C++ 成员), 626
esp_ble_mesh_state_change_time_zone_set_t::time_zone_offset_new (C++ 成员), 626
esp_ble_mesh_state_transition_t (C++ 类), 387
esp_ble_mesh_state_transition_t::BLE_MESH_ATOMIC_DEFINE (C++ 函数), 387
esp_ble_mesh_state_transition_t::counter (C++ 成员), 387
esp_ble_mesh_state_transition_t::delay (C++ 成员), 387
esp_ble_mesh_state_transition_t::just_started (C++ 成员), 387
esp_ble_mesh_state_transition_t::quo_tt (C++ 成员), 387
esp_ble_mesh_state_transition_t::remain_time (C++ 成员), 387
esp_ble_mesh_state_transition_t::start_timestamp (C++ 成员), 387
esp_ble_mesh_state_transition_t::timer (C++ 成员), 387
esp_ble_mesh_state_transition_t::total_duration (C++ 成员), 387
esp_ble_mesh_state_transition_t::trans_time (C++ 成员), 387
ESP_BLE_MESH_STATIC_OOB (C++ 枚举子), 410
ESP_BLE_MESH_STOP_BLE_ADVERTISING_COMP_EVT (C++ 枚举子), 417
ESP_BLE_MESH_SUPPLY_VOLTAGE_TOO_HIGH_ERROR (C 宏), 528
ESP_BLE_MESH_SUPPLY_VOLTAGE_TOO_HIGH_WARNING (C 宏), 528
ESP_BLE_MESH_SUPPLY_VOLTAGE_TOO_LOW_ERROR (C 宏), 528
ESP_BLE_MESH_SUPPLY_VOLTAGE_TOO_LOW_WARNING (C 宏), 528
ESP_BLE_MESH_TAI_OF_DELTA_CHANGE_LEN (C 宏), 635
ESP_BLE_MESH_TAI_OF_ZONE_CHANGE_LEN (C 宏), 635
ESP_BLE_MESH_TAI_SECONDS_LEN (C 宏), 635
ESP_BLE_MESH_TAI_UTC_DELTA_MAX_VALUE (C 宏), 635
esp_ble_mesh_tai_utc_delta_set_t (C++ 类), 611
esp_ble_mesh_tai_utc_delta_set_t::padding (C++ 成员), 614
esp_ble_mesh_tai_utc_delta_set_t::tai_delta_change (C++ 成员), 615
esp_ble_mesh_tai_utc_delta_set_t::tai_utc_delta_new (C++ 成员), 614
esp_ble_mesh_tai_utc_delta_status_cb_t (C++ 类), 617
esp_ble_mesh_tai_utc_delta_status_cb_t::padding_1 (C++ 成员), 617
esp_ble_mesh_tai_utc_delta_status_cb_t::padding_2 (C++ 成员), 617
esp_ble_mesh_tai_utc_delta_status_cb_t::tai_delta_change (C++ 成员), 618
esp_ble_mesh_tai_utc_delta_status_cb_t::tai_utc_delta_curr (C++ 成员), 617
esp_ble_mesh_tai_utc_delta_status_cb_t::tai_utc_delta_new (C++ 成员), 617
ESP_BLE_MESH_TAMPER_ERROR (C 宏), 529
ESP_BLE_MESH_TAMPER_WARNING (C 宏), 529

ESP_BLE_MESH_TIME_AUTHORITY (C 宏), 636
ESP_BLE_MESH_TIME_CLINET (C 宏), 636
ESP_BLE_MESH_TIME_NONE (C 宏), 636
ESP_BLE_MESH_TIME_RELAY (C 宏), 636
esp_ble_mesh_time_role_set_t (C++ 类), 615
esp_ble_mesh_time_role_set_t::time_role (C++ 成员), 615
esp_ble_mesh_time_role_status_cb_t (C++ 类), 618
esp_ble_mesh_time_role_status_cb_t::time_role (C++ 成员), 618
esp_ble_mesh_time_scene_client_cb_event_t (C++ 类型), 637
esp_ble_mesh_time_scene_client_cb_param_t (C++ 类), 619
esp_ble_mesh_time_scene_client_cb_param_t::error_code (C++ 成员), 620
esp_ble_mesh_time_scene_client_cb_param_t::params (C++ 成员), 620
esp_ble_mesh_time_scene_client_cb_param_t::status_cb (C++ 成员), 620
esp_ble_mesh_time_scene_client_cb_t (C++ 类型), 637
ESP_BLE_MESH_TIME_SCENE_CLIENT_EVT_MAX (C++ 枚举子), 637
esp_ble_mesh_time_scene_client_get_state (C++ 函数), 609
ESP_BLE_MESH_TIME_SCENE_CLIENT_GET_STATE_EVT (C++ 枚举子), 637
esp_ble_mesh_time_scene_client_get_state_t (C++ 类型), 610
esp_ble_mesh_time_scene_client_get_state_t::scheduler_act (C++ 成员), 610
ESP_BLE_MESH_TIME_SCENE_CLIENT_PUBLISH_EVT (C++ 枚举子), 637
esp_ble_mesh_time_scene_client_set_state (C++ 函数), 609
ESP_BLE_MESH_TIME_SCENE_CLIENT_SET_STATE_EVT (C++ 枚举子), 637
esp_ble_mesh_time_scene_client_set_state_t (C++ 类型), 610
esp_ble_mesh_time_scene_client_set_state_t::scene_delete (C++ 成员), 611
esp_ble_mesh_time_scene_client_set_state_t::scene_recall (C++ 成员), 611
esp_ble_mesh_time_scene_client_set_state_t::scene_store (C++ 成员), 610
esp_ble_mesh_time_scene_client_set_state_t::scheduler_act (C++ 成员), 611
esp_ble_mesh_time_scene_client_set_state_t::tai_utc_delta (C++ 成员), 610
esp_ble_mesh_time_scene_client_set_state_t::time_role_set (C++ 成员), 610
esp_ble_mesh_time_scene_client_set_state_t::time_set (C++ 成员), 610
esp_ble_mesh_time_scene_client_set_state_t::time_zone_set (C++ 成员), 610
esp_ble_mesh_time_scene_client_status_cb_t (C++ 类型), 611
esp_ble_mesh_time_scene_client_status_cb_t::scene_register (C++ 成员), 611
esp_ble_mesh_time_scene_client_status_cb_t::scene_status (C++ 成员), 611
esp_ble_mesh_time_scene_client_status_cb_t::scheduler_act (C++ 成员), 611
esp_ble_mesh_time_scene_client_status_cb_t::scheduler_stat (C++ 成员), 611
esp_ble_mesh_time_scene_client_status_cb_t::tai_utc_delta (C++ 成员), 611
esp_ble_mesh_time_scene_client_status_cb_t::time_role_stat (C++ 成员), 611
esp_ble_mesh_time_scene_client_status_cb_t::time_status (C++ 成员), 611
esp_ble_mesh_time_scene_client_status_cb_t::time_zone_stat (C++ 成员), 611
ESP_BLE_MESH_TIME_SCENE_CLIENT_TIMEOUT_EVT (C++ 枚举子), 637
esp_ble_mesh_time_scene_message_opcode_t (C++ 类型), 410
esp_ble_mesh_time_scene_server_cb_event_t (C++ 类型), 637
esp_ble_mesh_time_scene_server_cb_param_t (C++ 类), 631
esp_ble_mesh_time_scene_server_cb_param_t::ctx

(C++ 成员), 632
esp_ble_mesh_time_scene_server_cb_param_t::model (C++ 成员), 632
esp_ble_mesh_time_scene_server_cb_param_t::value (C++ 成员), 632
esp_ble_mesh_time_scene_server_cb_t (C++ 类型), 637
esp_ble_mesh_time_scene_server_cb_value_t (C++ 类型), 613
esp_ble_mesh_time_scene_server_cb_value_t::get (C++ 成员), 613
esp_ble_mesh_time_scene_server_cb_value_t::set (C++ 成员), 613
esp_ble_mesh_time_scene_server_cb_value_t::state_change (C++ 成员), 613
esp_ble_mesh_time_scene_server_cb_value_t::status_cb (C++ 成员), 613
ESP_BLE_MESH_TIME_SCENE_SERVER_EVT_MAX (C++ 枚举子), 638
ESP_BLE_MESH_TIME_SCENE_SERVER_RECV_GET_MSG_EVT (C++ 枚举子), 638
esp_ble_mesh_time_scene_server_recv_get_msg_t (C++ 类型), 612
esp_ble_mesh_time_scene_server_recv_get_msg_t::scheduler_act (C++ 成员), 612
ESP_BLE_MESH_TIME_SCENE_SERVER_RECV_SET_MSG_EVT (C++ 枚举子), 638
esp_ble_mesh_time_scene_server_recv_set_msg_t (C++ 类型), 612
esp_ble_mesh_time_scene_server_recv_set_msg_t::scheduler_delete (C++ 成员), 613
esp_ble_mesh_time_scene_server_recv_set_msg_t::scene_recall (C++ 成员), 613
esp_ble_mesh_time_scene_server_recv_set_msg_t::scene_store (C++ 成员), 613
esp_ble_mesh_time_scene_server_recv_set_msg_t::scheduler_act (C++ 成员), 613
esp_ble_mesh_time_scene_server_recv_set_msg_t::tai_utc_delta (C++ 成员), 613
esp_ble_mesh_time_scene_server_recv_set_msg_t::time (C++ 成员), 612
esp_ble_mesh_time_scene_server_recv_set_msg_t::time_role (C++ 成员), 613
esp_ble_mesh_time_scene_server_recv_set_msg_t::time_zone (C++ 成员), 612
ESP_BLE_MESH_TIME_SCENE_SERVER_RECV_STATUS_MSG_EVT (C++ 枚举子), 638
esp_ble_mesh_time_scene_server_recv_status_msg_t (C++ 类型), 613
esp_ble_mesh_time_scene_server_recv_status_msg_t::time_sta (C++ 成员), 613
ESP_BLE_MESH_TIME_SCENE_SERVER_STATE_CHANGE_EVT (C++ 枚举子), 638
esp_ble_mesh_time_scene_server_state_change_t (C++ 类型), 611
esp_ble_mesh_time_scene_server_state_change_t::scene_delet (C++ 成员), 612
esp_ble_mesh_time_scene_server_state_change_t::scene_recal (C++ 成员), 612
esp_ble_mesh_time_scene_server_state_change_t::scene_store (C++ 成员), 612
esp_ble_mesh_time_scene_server_state_change_t::scheduler_a (C++ 成员), 612
esp_ble_mesh_time_scene_server_state_change_t::tai_utc_del (C++ 成员), 612
esp_ble_mesh_time_scene_server_state_change_t::time_role_s (C++ 成员), 612
esp_ble_mesh_time_scene_server_state_change_t::time_set (C++ 成员), 612
esp_ble_mesh_time_scene_server_state_change_t::time_status (C++ 成员), 612
esp_ble_mesh_time_scene_server_state_change_t::time_zone_s (C++ 成员), 612
esp_ble_mesh_time_set_t (C++ 类), 614
esp_ble_mesh_time_set_t::sub_second (C++ 成员), 614
esp_ble_mesh_time_set_t::tai_seconds (C++ 成员), 614
esp_ble_mesh_time_set_t::tai_utc_delta (C++ 成员), 614
esp_ble_mesh_time_set_t::time_authority (C++ 成员), 614
esp_ble_mesh_time_set_t::time_zone_offset (C++ 成员), 614

esp_ble_mesh_time_set_t::uncertainty (C++ 成员), 614
esp_ble_mesh_time_setup_srv_t (C++ 类), 621
esp_ble_mesh_time_setup_srv_t::model (C++ 成员), 621
esp_ble_mesh_time_setup_srv_t::rsp_ctrl (C++ 成员), 621
esp_ble_mesh_time_setup_srv_t::state (C++ 成员), 621
esp_ble_mesh_time_srv_t (C++ 类), 621
esp_ble_mesh_time_srv_t::model (C++ 成员), 621
esp_ble_mesh_time_srv_t::rsp_ctrl (C++ 成员), 621
esp_ble_mesh_time_srv_t::state (C++ 成员), 621
esp_ble_mesh_time_state_t (C++ 类), 620
esp_ble_mesh_time_state_t::subsecond (C++ 成员), 620
esp_ble_mesh_time_state_t::tai_delta_change (C++ 成员), 620
esp_ble_mesh_time_state_t::tai_seconds (C++ 成员), 620
esp_ble_mesh_time_state_t::tai_utc_delta_curr (C++ 成员), 620
esp_ble_mesh_time_state_t::tai_utc_delta_new (C++ 成员), 620
esp_ble_mesh_time_state_t::tai_zone_change (C++ 成员), 620
esp_ble_mesh_time_state_t::time (C++ 成员), 620
esp_ble_mesh_time_state_t::time_authority (C++ 成员), 620
esp_ble_mesh_time_state_t::time_role (C++ 成员), 620
esp_ble_mesh_time_state_t::time_zone_offset_curr (C++ 成员), 620
esp_ble_mesh_time_state_t::time_zone_offset_new (C++ 成员), 620
esp_ble_mesh_time_state_t::uncertainty (C++ 成员), 620
esp_ble_mesh_time_status_cb_t (C++ 类), 616
esp_ble_mesh_time_status_cb_t::sub_second (C++ 成员), 617
esp_ble_mesh_time_status_cb_t::tai_seconds (C++ 成员), 617
esp_ble_mesh_time_status_cb_t::tai_utc_delta (C++ 成员), 617
esp_ble_mesh_time_status_cb_t::time_authority (C++ 成员), 617
esp_ble_mesh_time_status_cb_t::time_zone_offset (C++ 成员), 617
esp_ble_mesh_time_status_cb_t::uncertainty (C++ 成员), 617
esp_ble_mesh_time_zone_set_t (C++ 类), 614
esp_ble_mesh_time_zone_set_t::tai_zone_change (C++ 成员), 614
esp_ble_mesh_time_zone_set_t::time_zone_offset_new (C++ 成员), 614
esp_ble_mesh_time_zone_status_cb_t (C++ 类), 617
esp_ble_mesh_time_zone_status_cb_t::tai_zone_change (C++ 成员), 617
esp_ble_mesh_time_zone_status_cb_t::time_zone_offset_curr (C++ 成员), 617
esp_ble_mesh_time_zone_status_cb_t::time_zone_offset_new (C++ 成员), 617
ESP_BLE_MESH_TRANSMIT (C 宏), 391
ESP_BLE_MESH_TTL_DEFAULT (C 宏), 389
ESP_BLE_MESH_TTL_MAX (C 宏), 389
ESP_BLE_MESH_TWIST (C++ 枚举子), 411
ESP_BLE_MESH_TYPE_COMPLETE_CB (C++ 枚举子), 410
ESP_BLE_MESH_TYPE_INTPUT_CB (C++ 枚举子), 410
ESP_BLE_MESH_TYPE_LINK_CLOSE_CB (C++ 枚举子), 410
ESP_BLE_MESH_TYPE_LINK_OPEN_CB (C++ 枚举子), 410
ESP_BLE_MESH_TYPE_OUTPUT_NUM_CB (C++ 枚举子), 410
ESP_BLE_MESH_TYPE_OUTPUT_STR_CB (C++ 枚举子), 410
ESP_BLE_MESH_TYPE_PROV_CB (C++ 枚举子), 410
ESP_BLE_MESH_TYPE_RESET_CB (C++ 枚举子), 410

ESP_BLE_MESH_UNKNOWN_TAI_DELTA_CHANGE (C 宏), 635
ESP_BLE_MESH_UNKNOWN_TAI_SECONDS (C 宏), 635
ESP_BLE_MESH_UNKNOWN_TAI_ZONE_CHANGE (C 宏), 635
esp_ble_mesh_unprov_dev_add_t (C++ 类), 381
esp_ble_mesh_unprov_dev_add_t::addr (C++ 成员), 382
esp_ble_mesh_unprov_dev_add_t::addr_type (C++ 成员), 382
esp_ble_mesh_unprov_dev_add_t::bearer (C++ 成员), 382
esp_ble_mesh_unprov_dev_add_t::oob_info (C++ 成员), 382
esp_ble_mesh_unprov_dev_add_t::uuid (C++ 成员), 382
ESP_BLE_MESH_VENDOR_MODEL (C 宏), 392
ESP_BLE_MESH_VIBRATE (C++ 枚举子), 411
ESP_BLE_MESH_VIBRATION_ERROR (C 宏), 529
ESP_BLE_MESH_VIBRATION_WARNING (C 宏), 529
ESP_BLE_ONLY_ACCEPT_SPECIFIED_AUTH_DISABLE (C 宏), 195
ESP_BLE_ONLY_ACCEPT_SPECIFIED_AUTH_ENABLE (C 宏), 195
ESP_BLE_OOB_DISABLE (C 宏), 195
ESP_BLE_OOB_ENABLE (C 宏), 195
esp_ble_oob_req_reply (C++ 函数), 179
esp_ble_passkey_reply (C++ 函数), 177
esp_ble_pcsrk_keys_t (C++ 类), 190
esp_ble_pcsrk_keys_t::counter (C++ 成员), 191
esp_ble_pcsrk_keys_t::csrk (C++ 成员), 191
esp_ble_pcsrk_keys_t::sec_level (C++ 成员), 191
esp_ble_penc_keys_t (C++ 类), 190
esp_ble_penc_keys_t::ediv (C++ 成员), 190
esp_ble_penc_keys_t::key_size (C++ 成员), 190
esp_ble_penc_keys_t::ltk (C++ 成员), 190
esp_ble_penc_keys_t::rand (C++ 成员), 190
esp_ble_penc_keys_t::sec_level (C++ 成员), 190
esp_ble_pid_keys_t (C++ 类), 191
esp_ble_pid_keys_t::addr_type (C++ 成员), 191
esp_ble_pid_keys_t::irk (C++ 成员), 191
esp_ble_pid_keys_t::static_addr (C++ 成员), 191
esp_ble_pkt_data_length_params_t (C++ 类), 190
esp_ble_pkt_data_length_params_t::rx_len (C++ 成员), 190
esp_ble_pkt_data_length_params_t::tx_len (C++ 成员), 190
esp_ble_power_type_t (C++ 类型), 161
ESP_BLE_PWR_TYPE_ADV (C++ 枚举子), 162
ESP_BLE_PWR_TYPE_CONN_HDL0 (C++ 枚举子), 161
ESP_BLE_PWR_TYPE_CONN_HDL1 (C++ 枚举子), 161
ESP_BLE_PWR_TYPE_CONN_HDL2 (C++ 枚举子), 161
ESP_BLE_PWR_TYPE_CONN_HDL3 (C++ 枚举子), 161
ESP_BLE_PWR_TYPE_CONN_HDL4 (C++ 枚举子), 161
ESP_BLE_PWR_TYPE_CONN_HDL5 (C++ 枚举子), 161
ESP_BLE_PWR_TYPE_CONN_HDL6 (C++ 枚举子), 161
ESP_BLE_PWR_TYPE_CONN_HDL7 (C++ 枚举子), 161
ESP_BLE_PWR_TYPE_CONN_HDL8 (C++ 枚举子), 161
ESP_BLE_PWR_TYPE_DEFAULT (C++ 枚举子), 162
ESP_BLE_PWR_TYPE_NUM (C++ 枚举子), 162
ESP_BLE_PWR_TYPE_SCAN (C++ 枚举子), 162
esp_ble_remove_bond_device (C++ 函数), 178
esp_ble_resolve_adv_data (C++ 函数), 174
esp_ble_scan_dupilcate_list_flush (C++ 函数), 158
esp_ble_scan_duplicate_t (C++ 类型), 203
esp_ble_scan_filter_t (C++ 类型), 202
ESP_BLE_SCAN_PARAM_UNDEF (C 宏), 164
esp_ble_scan_params_t (C++ 类), 189
esp_ble_scan_params_t::own_addr_type (C++ 成员), 189
esp_ble_scan_params_t::scan_duplicate (C++ 成员), 189
esp_ble_scan_params_t::scan_filter_policy (C++ 成员), 189
esp_ble_scan_params_t::scan_interval (C++ 成员), 189
esp_ble_scan_params_t::scan_type (C++ 成员), 189
esp_ble_scan_params_t::scan_window (C++ 成

员), 189
ESP_BLE_SCAN_RSP_DATA_LEN_MAX (C 宏), 197
esp_ble_scan_type_t (C++ 类型), 202
esp_ble_sec_act_t (C++ 类型), 201
ESP_BLE_SEC_ENCRYPT (C++ 枚举子), 202
ESP_BLE_SEC_ENCRYPT_MITM (C++ 枚举子), 202
ESP_BLE_SEC_ENCRYPT_NO_MITM (C++ 枚举子), 202
esp_ble_sec_key_notif_t (C++ 类), 192
esp_ble_sec_key_notif_t::bd_addr (C++ 成员), 192
esp_ble_sec_key_notif_t::passkey (C++ 成员), 192
esp_ble_sec_req_t (C++ 类), 192
esp_ble_sec_req_t::bd_addr (C++ 成员), 192
esp_ble_sec_t (C++ 类型), 180
esp_ble_sec_t::auth_cmpl (C++ 成员), 180
esp_ble_sec_t::ble_id_keys (C++ 成员), 180
esp_ble_sec_t::ble_key (C++ 成员), 180
esp_ble_sec_t::ble_req (C++ 成员), 180
esp_ble_sec_t::key_notif (C++ 成员), 180
esp_ble_set_encryption (C++ 函数), 177
ESP_BLE_SM_AUTHEN_REQ_MODE (C++ 枚举子), 202
ESP_BLE_SM_CLEAR_STATIC_PASSKEY (C++ 枚举子), 202
ESP_BLE_SM_IOCAP_MODE (C++ 枚举子), 202
ESP_BLE_SM_MAX_KEY_SIZE (C++ 枚举子), 202
ESP_BLE_SM_MAX_PARAM (C++ 枚举子), 202
ESP_BLE_SM_MIN_KEY_SIZE (C++ 枚举子), 202
ESP_BLE_SM_ONLY_ACCEPT_SPECIFIED_SEC_AUTH (C++ 枚举子), 202
ESP_BLE_SM_OOB_SUPPORT (C++ 枚举子), 202
esp_ble_sm_param_t (C++ 类型), 202
ESP_BLE_SM_PASSKEY (C++ 枚举子), 202
ESP_BLE_SM_SET_INIT_KEY (C++ 枚举子), 202
ESP_BLE_SM_SET_RSP_KEY (C++ 枚举子), 202
ESP_BLE_SM_SET_STATIC_PASSKEY (C++ 枚举子), 202
esp_ble_tx_power_get (C++ 函数), 154
esp_ble_tx_power_set (C++ 函数), 154
ESP_BLE_WHITELIST_ADD (C++ 枚举子), 204
ESP_BLE_WHITELIST_REMOVE (C++ 枚举子), 204
esp_ble_wl_opration_t (C++ 类型), 204
esp_bluedroid_deinit (C++ 函数), 168
esp_bluedroid_disable (C++ 函数), 167
esp_bluedroid_enable (C++ 函数), 167
esp_bluedroid_get_status (C++ 函数), 167
esp_bluedroid_init (C++ 函数), 167
ESP_BLUEDROID_STATUS_CHECK (C 宏), 164
ESP_BLUEDROID_STATUS_ENABLED (C++ 枚举子), 168
ESP_BLUEDROID_STATUS_INITIALIZED (C++ 枚举子), 168
esp_bluedroid_status_t (C++ 类型), 168
ESP_BLUEDROID_STATUS_UNINITIALIZED (C++ 枚举子), 168
esp_blufi_ap_record_t (C++ 类), 269
esp_blufi_ap_record_t::rssi (C++ 成员), 269
esp_blufi_ap_record_t::ssid (C++ 成员), 269
esp_blufi_callbacks_t (C++ 类), 269
esp_blufi_callbacks_t::checksum_func (C++ 成员), 270
esp_blufi_callbacks_t::decrypt_func (C++ 成员), 270
esp_blufi_callbacks_t::encrypt_func (C++ 成员), 270
esp_blufi_callbacks_t::event_cb (C++ 成员), 269
esp_blufi_callbacks_t::negotiate_data_handler (C++ 成员), 269
esp_blufi_cb_event_t (C++ 类型), 271
esp_blufi_cb_param_t (C++ 类型), 262
esp_blufi_cb_param_t::blufi_connect_evt_param (C++ 类), 263
esp_blufi_cb_param_t::blufi_connect_evt_param::conn_id (C++ 成员), 264
esp_blufi_cb_param_t::blufi_connect_evt_param::remote_bda (C++ 成员), 263
esp_blufi_cb_param_t::blufi_connect_evt_param::server_if (C++ 成员), 263
esp_blufi_cb_param_t::blufi_deinit_finish_evt_param (C++ 类), 264
esp_blufi_cb_param_t::blufi_deinit_finish_evt_param::state (C++ 成员), 264
esp_blufi_cb_param_t::blufi_disconnect_evt_param

(C++ 类), 264
esp_blufi_cb_param_t::blufi_disconnect_evt_param
(C++ 成员), 264
esp_blufi_cb_param_t::blufi_get_error_evt_param
(C++ 类), 264
esp_blufi_cb_param_t::blufi_get_error_evt_param::state
(C++ 成员), 264
esp_blufi_cb_param_t::blufi_init_finish_evt_param
(C++ 类), 264
esp_blufi_cb_param_t::blufi_init_finish_evt_param::state
(C++ 成员), 264
esp_blufi_cb_param_t::blufi_recv_ca_evt_param
(C++ 类), 264
esp_blufi_cb_param_t::blufi_recv_ca_evt_param::cert
(C++ 成员), 265
esp_blufi_cb_param_t::blufi_recv_ca_evt_param::cert_len
(C++ 成员), 265
esp_blufi_cb_param_t::blufi_recv_client_cert_evt_param
(C++ 类), 265
esp_blufi_cb_param_t::blufi_recv_client_cert_evt_param::cert
(C++ 成员), 265
esp_blufi_cb_param_t::blufi_recv_client_cert_evt_param::cert_len
(C++ 成员), 265
esp_blufi_cb_param_t::blufi_recv_client_pkey_evt_param
(C++ 类), 265
esp_blufi_cb_param_t::blufi_recv_client_pkey_evt_param::pkey
(C++ 成员), 265
esp_blufi_cb_param_t::blufi_recv_client_pkey_evt_param::pkey_len
(C++ 成员), 265
esp_blufi_cb_param_t::blufi_recv_custom_data_evt_param
(C++ 类), 265
esp_blufi_cb_param_t::blufi_recv_custom_data_evt_param::data
(C++ 成员), 265
esp_blufi_cb_param_t::blufi_recv_custom_data_evt_param::data_len
(C++ 成员), 265
esp_blufi_cb_param_t::blufi_recv_server_cert_evt_param
(C++ 类), 265
esp_blufi_cb_param_t::blufi_recv_server_cert_evt_param::cert
(C++ 成员), 266
esp_blufi_cb_param_t::blufi_recv_server_cert_evt_param::cert_len
(C++ 成员), 266
esp_blufi_cb_param_t::blufi_recv_server_pkey_evt_param
(C++ 类), 266
esp_blufi_cb_param_t::blufi_recv_server_pkey_evt_param::pkey
(C++ 成员), 266
esp_blufi_cb_param_t::blufi_recv_server_pkey_evt_param::pkey_len
(C++ 成员), 266
esp_blufi_cb_param_t::blufi_recv_softap_auth_mode_evt_param
(C++ 类), 266
esp_blufi_cb_param_t::blufi_recv_softap_auth_mode_evt_param::auth_mode
(C++ 成员), 266
esp_blufi_cb_param_t::blufi_recv_softap_channel_evt_param
(C++ 类), 266
esp_blufi_cb_param_t::blufi_recv_softap_channel_evt_param::channel
(C++ 成员), 266
esp_blufi_cb_param_t::blufi_recv_softap_max_conn_num_evt_param
(C++ 类), 266
esp_blufi_cb_param_t::blufi_recv_softap_max_conn_num_evt_param::max_conn_num
(C++ 成员), 266
esp_blufi_cb_param_t::blufi_recv_softap_passwd_evt_param
(C++ 类), 266
esp_blufi_cb_param_t::blufi_recv_softap_passwd_evt_param::passwd
(C++ 成员), 267
esp_blufi_cb_param_t::blufi_recv_softap_passwd_evt_param::passwd_len
(C++ 成员), 267
esp_blufi_cb_param_t::blufi_recv_softap_ssid_evt_param
(C++ 类), 267
esp_blufi_cb_param_t::blufi_recv_softap_ssid_evt_param::ssid
(C++ 成员), 267
esp_blufi_cb_param_t::blufi_recv_softap_ssid_evt_param::ssid_len
(C++ 成员), 267
esp_blufi_cb_param_t::blufi_recv_sta_bssid_evt_param
(C++ 类), 267
esp_blufi_cb_param_t::blufi_recv_sta_bssid_evt_param::bssid
(C++ 成员), 267
esp_blufi_cb_param_t::blufi_recv_sta_passwd_evt_param
(C++ 类), 267
esp_blufi_cb_param_t::blufi_recv_sta_passwd_evt_param::passwd
(C++ 成员), 267
esp_blufi_cb_param_t::blufi_recv_sta_passwd_evt_param::passwd_len
(C++ 成员), 267
esp_blufi_cb_param_t::blufi_recv_sta_ssid_evt_param
(C++ 类), 267
esp_blufi_cb_param_t::blufi_recv_sta_ssid_evt_param::ssid

(C++ 成员), 267
esp_blufi_cb_param_t::blufi_recv_sta_ssid_evt_param::ssid (C++ 成员), 267
esp_blufi_cb_param_t::blufi_recv_username_evt_param (C++ 类), 268
esp_blufi_cb_param_t::blufi_recv_username_evt_param::name (C++ 成员), 268
esp_blufi_cb_param_t::blufi_recv_username_evt_param::username (C++ 成员), 268
esp_blufi_cb_param_t::blufi_set_wifi_mode_evt_param (C++ 类), 268
esp_blufi_cb_param_t::blufi_set_wifi_mode_evt_param::wifi_mode (C++ 成员), 268
esp_blufi_cb_param_t::ca (C++ 成员), 263
esp_blufi_cb_param_t::client_cert (C++ 成员), 263
esp_blufi_cb_param_t::client_pkey (C++ 成员), 263
esp_blufi_cb_param_t::connect (C++ 成员), 262
esp_blufi_cb_param_t::custom_data (C++ 成员), 263
esp_blufi_cb_param_t::deinit_finish (C++ 成员), 262
esp_blufi_cb_param_t::disconnect (C++ 成员), 262
esp_blufi_cb_param_t::init_finish (C++ 成员), 262
esp_blufi_cb_param_t::report_error (C++ 成员), 263
esp_blufi_cb_param_t::server_cert (C++ 成员), 263
esp_blufi_cb_param_t::server_pkey (C++ 成员), 263
esp_blufi_cb_param_t::softap_auth_mode (C++ 成员), 263
esp_blufi_cb_param_t::softap_channel (C++ 成员), 263
esp_blufi_cb_param_t::softap_max_conn_num (C++ 成员), 263
esp_blufi_cb_param_t::softap_passwd (C++ 成员), 263
esp_blufi_cb_param_t::softap_ssid (C++ 成员), 263
esp_blufi_cb_param_t::sta_bssid (C++ 成员), 262
esp_blufi_cb_param_t::sta_passwd (C++ 成员), 262
esp_blufi_cb_param_t::sta_ssid (C++ 成员), 262
esp_blufi_cb_param_t::username (C++ 成员), 263
esp_blufi_cb_param_t::wifi_mode (C++ 成员), 262
ESP_BLUFI_CHECKSUM_ERROR (C++ 枚举子), 273
esp_blufi_checksum_func_t (C++ 类型), 271
esp_blufi_close (C++ 函数), 261
ESP_BLUFI_DATA_FORMAT_ERROR (C++ 枚举子), 273
ESP_BLUFI_DECRYPT_ERROR (C++ 枚举子), 273
esp_blufi_decrypt_func_t (C++ 类型), 271
ESP_BLUFI_DEINIT_FAILED (C++ 枚举子), 273
ESP_BLUFI_DEINIT_OK (C++ 枚举子), 272
esp_blufi_deinit_state_t (C++ 类型), 272
ESP_BLUFI_DH_MALLOC_ERROR (C++ 枚举子), 273
ESP_BLUFI_DH_PARAM_ERROR (C++ 枚举子), 273
ESP_BLUFI_ENCRYPT_ERROR (C++ 枚举子), 273
esp_blufi_encrypt_func_t (C++ 类型), 270
esp_blufi_error_state_t (C++ 类型), 273
ESP_BLUFI_EVENT_BLE_CONNECT (C++ 枚举子), 271
ESP_BLUFI_EVENT_BLE_DISCONNECT (C++ 枚举子), 271
esp_blufi_event_cb_t (C++ 类型), 270
ESP_BLUFI_EVENT_DEAUTHENTICATE_STA (C++ 枚举子), 271
ESP_BLUFI_EVENT_DEINIT_FINISH (C++ 枚举子), 271
ESP_BLUFI_EVENT_GET_WIFI_LIST (C++ 枚举子), 272
ESP_BLUFI_EVENT_GET_WIFI_STATUS (C++ 枚举子), 271
ESP_BLUFI_EVENT_INIT_FINISH (C++ 枚举子), 271
ESP_BLUFI_EVENT_RECV_CA_CERT (C++ 枚举子), 272
ESP_BLUFI_EVENT_RECV_CLIENT_CERT (C++ 枚举子), 272

ESP_BLUFI_EVENT_RECV_CLIENT_PRIV_KEY (C++ 枚举子), 272
ESP_BLUFI_EVENT_RECV_CUSTOM_DATA (C++ 枚举子), 272
ESP_BLUFI_EVENT_RECV_SERVER_CERT (C++ 枚举子), 272
ESP_BLUFI_EVENT_RECV_SERVER_PRIV_KEY (C++ 枚举子), 272
ESP_BLUFI_EVENT_RECV_SLAVE_DISCONNECT_BLE (C++ 枚举子), 272
ESP_BLUFI_EVENT_RECV_SOFTAP_AUTH_MODE (C++ 枚举子), 272
ESP_BLUFI_EVENT_RECV_SOFTAP_CHANNEL (C++ 枚举子), 272
ESP_BLUFI_EVENT_RECV_SOFTAP_MAX_CONN_NUM (C++ 枚举子), 272
ESP_BLUFI_EVENT_RECV_SOFTAP_PASSWD (C++ 枚举子), 272
ESP_BLUFI_EVENT_RECV_SOFTAP_SSID (C++ 枚举子), 272
ESP_BLUFI_EVENT_RECV_STA_BSSID (C++ 枚举子), 271
ESP_BLUFI_EVENT_RECV_STA_PASSWD (C++ 枚举子), 272
ESP_BLUFI_EVENT_RECV_STA_SSID (C++ 枚举子), 272
ESP_BLUFI_EVENT_RECV_USERNAME (C++ 枚举子), 272
ESP_BLUFI_EVENT_REPORT_ERROR (C++ 枚举子), 272
ESP_BLUFI_EVENT_REQ_CONNECT_TO_AP (C++ 枚举子), 271
ESP_BLUFI_EVENT_REQ_DISCONNECT_FROM_AP (C++ 枚举子), 271
ESP_BLUFI_EVENT_SET_WIFI_OPMODE (C++ 枚举子), 271
esp_blufi_extra_info_t (C++ 类), 268
esp_blufi_extra_info_t::softap_authmode (C++ 成员), 269
esp_blufi_extra_info_t::softap_authmode_set (C++ 成员), 269
esp_blufi_extra_info_t::softap_channel (C++ 成员), 269
esp_blufi_extra_info_t::softap_channel_set (C++ 成员), 269
esp_blufi_extra_info_t::softap_max_conn_num (C++ 成员), 269
esp_blufi_extra_info_t::softap_max_conn_num_set (C++ 成员), 269
esp_blufi_extra_info_t::softap_passwd (C++ 成员), 269
esp_blufi_extra_info_t::softap_passwd_len (C++ 成员), 269
esp_blufi_extra_info_t::softap_ssid (C++ 成员), 268
esp_blufi_extra_info_t::softap_ssid_len (C++ 成员), 269
esp_blufi_extra_info_t::sta_bssid (C++ 成员), 268
esp_blufi_extra_info_t::sta_bssid_set (C++ 成员), 268
esp_blufi_extra_info_t::sta_passwd (C++ 成员), 268
esp_blufi_extra_info_t::sta_passwd_len (C++ 成员), 268
esp_blufi_extra_info_t::sta_ssid (C++ 成员), 268
esp_blufi_extra_info_t::sta_ssid_len (C++ 成员), 268
esp_blufi_get_version (C++ 函数), 261
ESP_BLUFI_INIT_FAILED (C++ 枚举子), 272
ESP_BLUFI_INIT_OK (C++ 枚举子), 272
ESP_BLUFI_INIT_SECURITY_ERROR (C++ 枚举子), 273
esp_blufi_init_state_t (C++ 类型), 272
ESP_BLUFI_MAKE_PUBLIC_ERROR (C++ 枚举子), 273
esp_blufi_negotiate_data_handler_t (C++ 类型), 270
esp_blufi_profile_deinit (C++ 函数), 261
esp_blufi_profile_init (C++ 函数), 260
ESP_BLUFI_READ_PARAM_ERROR (C++ 枚举子), 273
esp_blufi_register_callbacks (C++ 函数), 260
esp_blufi_send_custom_data (C++ 函数), 262
esp_blufi_send_error_info (C++ 函数), 262

esp_blufi_send_wifi_conn_report (C++ 函数), 261
esp_blufi_send_wifi_list (C++ 函数), 261
ESP_BLUFI_SEQUENCE_ERROR (C++ 枚举子), 273
ESP_BLUFI_STA_CONN_FAIL (C++ 枚举子), 272
esp_blufi_sta_conn_state_t (C++ 类型), 272
ESP_BLUFI_STA_CONN_SUCCESS (C++ 枚举子), 272
esp_bredr_sco_datapath_set (C++ 函数), 155
esp_bredr_tx_power_get (C++ 函数), 154
esp_bredr_tx_power_set (C++ 函数), 154
ESP_BT_CLR_COD_SERVICE_CLASS (C++ 枚举子), 286
ESP_BT_COD_FORMAT_TYPE_1 (C 宏), 286
ESP_BT_COD_FORMAT_TYPE_BIT_MASK (C 宏), 286
ESP_BT_COD_FORMAT_TYPE_BIT_OFFSET (C 宏), 286
ESP_BT_COD_MAJOR_DEV_AV (C++ 枚举子), 289
ESP_BT_COD_MAJOR_DEV_BIT_MASK (C 宏), 285
ESP_BT_COD_MAJOR_DEV_BIT_OFFSET (C 宏), 285
ESP_BT_COD_MAJOR_DEV_COMPUTER (C++ 枚举子), 289
ESP_BT_COD_MAJOR_DEV_HEALTH (C++ 枚举子), 289
ESP_BT_COD_MAJOR_DEV_IMAGING (C++ 枚举子), 289
ESP_BT_COD_MAJOR_DEV_LAN_NAP (C++ 枚举子), 289
ESP_BT_COD_MAJOR_DEV_MISC (C++ 枚举子), 289
ESP_BT_COD_MAJOR_DEV_PERIPHERAL (C++ 枚举子), 289
ESP_BT_COD_MAJOR_DEV_PHONE (C++ 枚举子), 289
esp_bt_cod_major_dev_t (C++ 类型), 289
ESP_BT_COD_MAJOR_DEV_TOY (C++ 枚举子), 289
ESP_BT_COD_MAJOR_DEV_UNCATEGORIZED (C++ 枚举子), 290
ESP_BT_COD_MAJOR_DEV_WEARABLE (C++ 枚举子), 289
ESP_BT_COD_MINOR_DEV_BIT_MASK (C 宏), 285
ESP_BT_COD_MINOR_DEV_BIT_OFFSET (C 宏), 285
esp_bt_cod_mode_t (C++ 类型), 286
ESP_BT_COD_SRVC_AUDIO (C++ 枚举子), 288
ESP_BT_COD_SRVC_BIT_MASK (C 宏), 285
ESP_BT_COD_SRVC_BIT_OFFSET (C 宏), 285
ESP_BT_COD_SRVC_CAPTURING (C++ 枚举子), 288
ESP_BT_COD_SRVC_INFORMATION (C++ 枚举子), 289
ESP_BT_COD_SRVC_LMTD_DISCOVER (C++ 枚举子), 288
ESP_BT_COD_SRVC_NETWORKING (C++ 枚举子), 288
ESP_BT_COD_SRVC_NONE (C++ 枚举子), 288
ESP_BT_COD_SRVC_OBJ_TRANSFER (C++ 枚举子), 288
ESP_BT_COD_SRVC_POSITIONING (C++ 枚举子), 288
ESP_BT_COD_SRVC_RENDERING (C++ 枚举子), 288
esp_bt_cod_srvc_t (C++ 类型), 288
ESP_BT_COD_SRVC_TELEPHONY (C++ 枚举子), 288
esp_bt_cod_t (C++ 类), 284
esp_bt_cod_t::major (C++ 成员), 284
esp_bt_cod_t::minor (C++ 成员), 284
esp_bt_cod_t::reserved_2 (C++ 成员), 284
esp_bt_cod_t::reserved_8 (C++ 成员), 284
esp_bt_cod_t::service (C++ 成员), 284
ESP_BT_CONTROLLER_CONFIG_MAGIC_VAL (C 宏), 160
esp_bt_controller_config_t (C++ 类), 159
esp_bt_controller_config_t::auto_latency (C++ 成员), 159
esp_bt_controller_config_t::ble_max_conn (C++ 成员), 159
esp_bt_controller_config_t::bt_legacy_auth_vs_evt (C++ 成员), 160
esp_bt_controller_config_t::bt_max_acl_conn (C++ 成员), 159
esp_bt_controller_config_t::bt_max_sync_conn (C++ 成员), 160
esp_bt_controller_config_t::bt_sco_datapath (C++ 成员), 159
esp_bt_controller_config_t::controller_debug_flag (C++ 成员), 159
esp_bt_controller_config_t::controller_task_prio (C++ 成员), 159
esp_bt_controller_config_t::controller_task_stack_size (C++ 成员), 159
esp_bt_controller_config_t::hci_uart_baudrate (C++ 成员), 159
esp_bt_controller_config_t::hci_uart_no (C++ 成员), 159
esp_bt_controller_config_t::magic (C++ 成

员), 160
esp_bt_controller_config_t::mesh_adv_size (C++ 成员), 159
esp_bt_controller_config_t::mode (C++ 成员), 159
esp_bt_controller_config_t::normal_adv_size (C++ 成员), 159
esp_bt_controller_config_t::scan_duplicate_mode (C++ 成员), 159
esp_bt_controller_config_t::scan_duplicate_type (C++ 成员), 159
esp_bt_controller_config_t::send_adv_reserved_size (C++ 成员), 159
esp_bt_controller_deinit (C++ 函数), 155
esp_bt_controller_disable (C++ 函数), 155
esp_bt_controller_enable (C++ 函数), 155
esp_bt_controller_get_status (C++ 函数), 156
esp_bt_controller_init (C++ 函数), 155
esp_bt_controller_mem_release (C++ 函数), 156
ESP_BT_CONTROLLER_STATUS_ENABLED (C++ 枚举子), 161
ESP_BT_CONTROLLER_STATUS_IDLE (C++ 枚举子), 161
ESP_BT_CONTROLLER_STATUS_INITED (C++ 枚举子), 161
ESP_BT_CONTROLLER_STATUS_NUM (C++ 枚举子), 161
esp_bt_controller_status_t (C++ 类型), 161
esp_bt_dev_get_address (C++ 函数), 169
esp_bt_dev_set_device_name (C++ 函数), 169
esp_bt_dev_type_t (C++ 类型), 166
ESP_BT_DEVICE_TYPE_BLE (C++ 枚举子), 166
ESP_BT_DEVICE_TYPE_BREDR (C++ 枚举子), 166
ESP_BT_DEVICE_TYPE_DUMO (C++ 枚举子), 166
esp_bt_duplicate_exceptional_subcode_type_t (C++ 类型), 204
ESP_BT_EIR_TYPE_CMPL_128BITS_UUID (C++ 枚举子), 288
ESP_BT_EIR_TYPE_CMPL_16BITS_UUID (C++ 枚举子), 287
ESP_BT_EIR_TYPE_CMPL_32BITS_UUID (C++ 枚举子), 288
ESP_BT_EIR_TYPE_CMPL_LOCAL_NAME (C++ 枚举子), 288
ESP_BT_EIR_TYPE_FLAGS (C++ 枚举子), 287
ESP_BT_EIR_TYPE_INCMPL_128BITS_UUID (C++ 枚举子), 288
ESP_BT_EIR_TYPE_INCMPL_16BITS_UUID (C++ 枚举子), 287
ESP_BT_EIR_TYPE_INCMPL_32BITS_UUID (C++ 枚举子), 287
ESP_BT_EIR_TYPE_MANU_SPECIFIC (C++ 枚举子), 288
ESP_BT_EIR_TYPE_SHORT_LOCAL_NAME (C++ 枚举子), 288
esp_bt_eir_type_t (C++ 类型), 287
ESP_BT_EIR_TYPE_TX_POWER_LEVEL (C++ 枚举子), 288
ESP_BT_GAP_AUTH_CMPL_EVT (C++ 枚举子), 290
esp_bt_gap_cancel_discovery (C++ 函数), 276
esp_bt_gap_cb_event_t (C++ 类型), 290
esp_bt_gap_cb_param_t (C++ 类型), 280
esp_bt_gap_cb_param_t::auth_cmpl (C++ 成员), 281
esp_bt_gap_cb_param_t::auth_cmpl_param (C++ 类), 281
esp_bt_gap_cb_param_t::auth_cmpl_param::bda (C++ 成员), 281
esp_bt_gap_cb_param_t::auth_cmpl_param::device_name (C++ 成员), 281
esp_bt_gap_cb_param_t::auth_cmpl_param::stat (C++ 成员), 281
esp_bt_gap_cb_param_t::bt_remove_bond_dev_cmpl_evt_param (C++ 类), 281
esp_bt_gap_cb_param_t::bt_remove_bond_dev_cmpl_evt_param:: (C++ 成员), 281
esp_bt_gap_cb_param_t::bt_remove_bond_dev_cmpl_evt_param:: (C++ 成员), 281
esp_bt_gap_cb_param_t::cfm_req (C++ 成员), 281
esp_bt_gap_cb_param_t::cfm_req_param (C++ 类), 281
esp_bt_gap_cb_param_t::cfm_req_param::bda (C++ 成员), 282

esp_bt_gap_cb_param_t::cfm_req_param::num_val (C++ 成员), 282
esp_bt_gap_cb_param_t::disc_res (C++ 成员), 280
esp_bt_gap_cb_param_t::disc_res_param (C++ 类), 282
esp_bt_gap_cb_param_t::disc_res_param::bda (C++ 成员), 282
esp_bt_gap_cb_param_t::disc_res_param::num_prop (C++ 成员), 282
esp_bt_gap_cb_param_t::disc_res_param::prop (C++ 成员), 282
esp_bt_gap_cb_param_t::disc_st_chg (C++ 成员), 280
esp_bt_gap_cb_param_t::disc_state_changed_param (C++ 类), 282
esp_bt_gap_cb_param_t::disc_state_changed_param::state (C++ 成员), 282
esp_bt_gap_cb_param_t::key_notif (C++ 成员), 281
esp_bt_gap_cb_param_t::key_notif_param (C++ 类), 282
esp_bt_gap_cb_param_t::key_notif_param::bda (C++ 成员), 282
esp_bt_gap_cb_param_t::key_notif_param::passkey (C++ 成员), 282
esp_bt_gap_cb_param_t::key_req (C++ 成员), 281
esp_bt_gap_cb_param_t::key_req_param (C++ 类), 282
esp_bt_gap_cb_param_t::key_req_param::bda (C++ 成员), 283
esp_bt_gap_cb_param_t::pin_req (C++ 成员), 281
esp_bt_gap_cb_param_t::pin_req_param (C++ 类), 283
esp_bt_gap_cb_param_t::pin_req_param::bda (C++ 成员), 283
esp_bt_gap_cb_param_t::pin_req_param::min_16_digit (C++ 成员), 283
esp_bt_gap_cb_param_t::read_rssi_delta (C++ 成员), 280
esp_bt_gap_cb_param_t::read_rssi_delta_param (C++ 类), 283
esp_bt_gap_cb_param_t::read_rssi_delta_param::bda (C++ 成员), 283
esp_bt_gap_cb_param_t::read_rssi_delta_param::rssi_delta (C++ 成员), 283
esp_bt_gap_cb_param_t::read_rssi_delta_param::stat (C++ 成员), 283
esp_bt_gap_cb_param_t::remove_bond_dev_cmpl (C++ 成员), 281
esp_bt_gap_cb_param_t::rmt_srvc_rec (C++ 成员), 280
esp_bt_gap_cb_param_t::rmt_srvc_rec_param (C++ 类), 283
esp_bt_gap_cb_param_t::rmt_srvc_rec_param::bda (C++ 成员), 283
esp_bt_gap_cb_param_t::rmt_srvc_rec_param::stat (C++ 成员), 283
esp_bt_gap_cb_param_t::rmt_srvcs (C++ 成员), 280
esp_bt_gap_cb_param_t::rmt_srvcs_param (C++ 类), 283
esp_bt_gap_cb_param_t::rmt_srvcs_param::bda (C++ 成员), 284
esp_bt_gap_cb_param_t::rmt_srvcs_param::num_uuids (C++ 成员), 284
esp_bt_gap_cb_param_t::rmt_srvcs_param::stat (C++ 成员), 284
esp_bt_gap_cb_param_t::rmt_srvcs_param::uuid_list (C++ 成员), 284
esp_bt_gap_cb_t (C++ 类型), 286
ESP_BT_GAP_CFM_REQ_EVT (C++ 枚举子), 290
ESP_BT_GAP_DEV_PROP_BDNAME (C++ 枚举子), 287
ESP_BT_GAP_DEV_PROP_COD (C++ 枚举子), 287
ESP_BT_GAP_DEV_PROP_EIR (C++ 枚举子), 287
ESP_BT_GAP_DEV_PROP_RSSI (C++ 枚举子), 287
esp_bt_gap_dev_prop_t (C++ 类), 284
esp_bt_gap_dev_prop_t::len (C++ 成员), 284
esp_bt_gap_dev_prop_t::type (C++ 成员), 284
esp_bt_gap_dev_prop_t::val (C++ 成员), 284
esp_bt_gap_dev_prop_type_t (C++ 类型), 287
ESP_BT_GAP_DISC_RES_EVT (C++ 枚举子), 290

ESP_BT_GAP_DISC_STATE_CHANGED_EVT (C++ 枚举子), 290
ESP_BT_GAP_DISCOVERY_STARTED (C++ 枚举子), 290
esp_bt_gap_discovery_state_t (C++ 类型), 290
ESP_BT_GAP_DISCOVERY_STOPPED (C++ 枚举子), 290
ESP_BT_GAP_EIR_DATA_LEN (C 宏), 285
ESP_BT_GAP_EVT_MAX (C++ 枚举子), 291
esp_bt_gap_get_bond_device_list (C++ 函数), 278
esp_bt_gap_get_bond_device_num (C++ 函数), 278
esp_bt_gap_get_cod (C++ 函数), 277
esp_bt_gap_get_cod_format_type (C++ 函数), 274
esp_bt_gap_get_cod_major_dev (C++ 函数), 274
esp_bt_gap_get_cod_minor_dev (C++ 函数), 274
esp_bt_gap_get_cod_srvc (C++ 函数), 274
esp_bt_gap_get_remote_service_record (C++ 函数), 276
esp_bt_gap_get_remote_services (C++ 函数), 276
esp_bt_gap_is_valid_cod (C++ 函数), 274
ESP_BT_GAP_KEY_NOTIF_EVT (C++ 枚举子), 290
ESP_BT_GAP_KEY_REQ_EVT (C++ 枚举子), 290
ESP_BT_GAP_MAX_BDNAME_LEN (C 宏), 285
ESP_BT_GAP_MAX_INQ_LEN (C 宏), 286
ESP_BT_GAP_MIN_INQ_LEN (C 宏), 286
esp_bt_gap_pin_reply (C++ 函数), 279
ESP_BT_GAP_PIN_REQ_EVT (C++ 枚举子), 290
esp_bt_gap_read_rssi_delta (C++ 函数), 277
ESP_BT_GAP_READ_RSSI_DELTA_EVT (C++ 枚举子), 290
esp_bt_gap_register_callback (C++ 函数), 274
ESP_BT_GAP_REMOVE_BOND_DEV_COMPLETE_EVT (C++ 枚举子), 290
esp_bt_gap_remove_bond_device (C++ 函数), 278
esp_bt_gap_resolve_eir_data (C++ 函数), 276
ESP_BT_GAP_RMT_SRVC_REC_EVT (C++ 枚举子), 290
ESP_BT_GAP_RMT_SRVCS_EVT (C++ 枚举子), 290
ESP_BT_GAP_RSSI_HIGH_THRLD (C 宏), 285
ESP_BT_GAP_RSSI_LOW_THRLD (C 宏), 285
esp_bt_gap_set_cod (C++ 函数), 277
esp_bt_gap_set_pin (C++ 函数), 278
esp_bt_gap_set_scan_mode (C++ 函数), 275
esp_bt_gap_set_security_param (C++ 函数), 279
esp_bt_gap_ssp_confirm_reply (C++ 函数), 280
esp_bt_gap_ssp_passkey_reply (C++ 函数), 280
esp_bt_gap_start_discovery (C++ 函数), 275
ESP_BT_HF_CLIENT_NUMBER_LEN (C 宏), 339
ESP_BT_HF_CLIENT_OPERATOR_NAME_LEN (C 宏), 339
ESP_BT_INIT_COD (C++ 枚举子), 287
ESP_BT_INQ_MODE_GENERAL_INQUIRY (C++ 枚举子), 291
ESP_BT_INQ_MODE_LIMITED_INQUIRY (C++ 枚举子), 291
esp_bt_inq_mode_t (C++ 类型), 291
ESP_BT_IO_CAP_IN (C 宏), 285
ESP_BT_IO_CAP_IO (C 宏), 285
ESP_BT_IO_CAP_NONE (C 宏), 285
ESP_BT_IO_CAP_OUT (C 宏), 285
esp_bt_io_cap_t (C++ 类型), 286
esp_bt_mem_release (C++ 函数), 157
ESP_BT_MODE_BLE (C++ 枚举子), 160
ESP_BT_MODE_BTDM (C++ 枚举子), 161
ESP_BT_MODE_CLASSIC_BT (C++ 枚举子), 160
ESP_BT_MODE_IDLE (C++ 枚举子), 160
esp_bt_mode_t (C++ 类型), 160
ESP_BT_OCTET16_LEN (C 宏), 164
esp_bt_octet16_t (C++ 类型), 165
ESP_BT_OCTET8_LEN (C 宏), 164
esp_bt_octet8_t (C++ 类型), 165
ESP_BT_PIN_CODE_LEN (C 宏), 285
esp_bt_pin_code_t (C++ 类型), 286
ESP_BT_PIN_TYPE_FIXED (C++ 枚举子), 289
esp_bt_pin_type_t (C++ 类型), 289
ESP_BT_PIN_TYPE_VARIABLE (C++ 枚举子), 289
ESP_BT_SCAN_MODE_CONNECTABLE (C++ 枚举子), 287
ESP_BT_SCAN_MODE_CONNECTABLE_DISCOVERABLE (C++ 枚举子), 287
ESP_BT_SCAN_MODE_NONE (C++ 枚举子), 287
esp_bt_scan_mode_t (C++ 类型), 287

ESP_BT_SET_COD_ALL (C++ 枚举子), 287
ESP_BT_SET_COD_MAJOR_MINOR (C++ 枚举子), 286
ESP_BT_SET_COD_SERVICE_CLASS (C++ 枚举子), 286
esp_bt_sleep_disable (C++ 函数), 158
esp_bt_sleep_enable (C++ 函数), 158
ESP_BT_SP_IOCAP_MODE (C++ 枚举子), 289
esp_bt_sp_param_t (C++ 类型), 289
ESP_BT_STATUS_AUTH_FAILURE (C++ 枚举子), 166
ESP_BT_STATUS_AUTH_REJECTED (C++ 枚举子), 166
ESP_BT_STATUS_BUSY (C++ 枚举子), 166
ESP_BT_STATUS_CONTROL_LE_DATA_LEN_UNSUPPORTED (C++ 枚举子), 166
ESP_BT_STATUS_DONE (C++ 枚举子), 166
ESP_BT_STATUS_ERR_ILLEGAL_PARAMETER_FMT (C++ 枚举子), 166
ESP_BT_STATUS_FAIL (C++ 枚举子), 165
ESP_BT_STATUS_INVALID_STATIC_RAND_ADDR (C++ 枚举子), 166
ESP_BT_STATUS_MEMORY_FULL (C++ 枚举子), 166
ESP_BT_STATUS_NOMEM (C++ 枚举子), 166
ESP_BT_STATUS_NOT_READY (C++ 枚举子), 165
ESP_BT_STATUS_PARAM_OUT_OF_RANGE (C++ 枚举子), 166
ESP_BT_STATUS_PARM_INVALID (C++ 枚举子), 166
ESP_BT_STATUS_PEER_LE_DATA_LEN_UNSUPPORTED (C++ 枚举子), 166
ESP_BT_STATUS_PENDING (C++ 枚举子), 166
ESP_BT_STATUS_RMT_DEV_DOWN (C++ 枚举子), 166
ESP_BT_STATUS_SUCCESS (C++ 枚举子), 165
esp_bt_status_t (C++ 类型), 165
ESP_BT_STATUS_TIMEOUT (C++ 枚举子), 166
ESP_BT_STATUS_UNACCEPT_CONN_INTERVAL (C++ 枚举子), 166
ESP_BT_STATUS_UNHANDLED (C++ 枚举子), 166
ESP_BT_STATUS_UNSUPPORTED (C++ 枚举子), 166
esp_bt_uuid_t (C++ 类), 164
esp_bt_uuid_t::len (C++ 成员), 164
esp_bt_uuid_t::uuid (C++ 成员), 164
esp_chip_info (C++ 函数), 1601
esp_chip_info_t (C++ 类), 1601
esp_chip_info_t::cores (C++ 成员), 1601
esp_chip_info_t::features (C++ 成员), 1601
esp_chip_info_t::model (C++ 成员), 1601
esp_chip_info_t::revision (C++ 成员), 1601
esp_chip_model_t (C++ 类型), 1603
esp_deep_sleep (C++ 函数), 1568
esp_deep_sleep_disable_rom_logging (C++ 函数), 1569
esp_deep_sleep_start (C++ 函数), 1568
esp_deep_sleep_wake_stub_fn_t (C++ 类型), 1570
ESP_DEFAULT_GATT_IF (C 宏), 164
esp_default_wake_deep_sleep (C++ 函数), 1569
esp_deregister_freertos_idle_hook (C++ 函数), 1461
esp_deregister_freertos_idle_hook_for_cpu (C++ 函数), 1460
esp_deregister_freertos_tick_hook (C++ 函数), 1461
esp_deregister_freertos_tick_hook_for_cpu (C++ 函数), 1461
esp_derive_local_mac (C++ 函数), 1600
esp_duplicate_info_t (C++ 类型), 198
esp_duplicate_scan_exceptional_list_type_t (C++ 类型), 205
ESP_EARLY_LOGD (C 宏), 1531
ESP_EARLY_LOGE (C 宏), 1531
ESP_EARLY_LOGI (C 宏), 1531
ESP_EARLY_LOGV (C 宏), 1531
ESP_EARLY_LOGW (C 宏), 1531
esp_efuse_apply_34_encoding (C++ 函数), 1517
esp_efuse_block_t (C++ 类型), 1518
esp_efuse_burn_new_values (C++ 函数), 1517
esp_efuse_check_secure_version (C++ 函数), 1517
esp_efuse_coding_scheme_t (C++ 类型), 1518
esp_efuse_desc_t (C++ 类), 1517
esp_efuse_desc_t::bit_count (C++ 成员), 1517
esp_efuse_desc_t::bit_start (C++ 成员), 1517
esp_efuse_desc_t::efuse_block (C++ 成员), 1517
esp_efuse_disable_basic_rom_console (C++ 函数), 1517

esp_efuse_disable_rom_download_mode (C++ 函数), 1517
esp_efuse_get_chip_ver (C++ 函数), 1516
esp_efuse_get_coding_scheme (C++ 函数), 1515
esp_efuse_get_field_size (C++ 函数), 1515
esp_efuse_get_pkg_ver (C++ 函数), 1516
esp_efuse_init (C++ 函数), 1517
esp_efuse_mac_get_custom (C++ 函数), 1600
esp_efuse_mac_get_default (C++ 函数), 1600
esp_efuse_read_block (C++ 函数), 1516
esp_efuse_read_field_blob (C++ 函数), 1512
esp_efuse_read_field_cnt (C++ 函数), 1513
esp_efuse_read_reg (C++ 函数), 1515
esp_efuse_read_secure_version (C++ 函数), 1517
esp_efuse_reset (C++ 函数), 1517
esp_efuse_set_read_protect (C++ 函数), 1514
esp_efuse_set_write_protect (C++ 函数), 1514
esp_efuse_update_secure_version (C++ 函数), 1517
esp_efuse_write_block (C++ 函数), 1516
esp_efuse_write_field_blob (C++ 函数), 1513
esp_efuse_write_field_cnt (C++ 函数), 1514
esp_efuse_write_random_key (C++ 函数), 1517
esp_efuse_write_reg (C++ 函数), 1515
ESP_ERR_CODING (C 宏), 1518
ESP_ERR_EFUSE (C 宏), 1517
ESP_ERR_EFUSE_CNT_IS_FULL (C 宏), 1517
ESP_ERR_EFUSE_REPEATED_PROG (C 宏), 1518
ESP_ERR_ESPNOW_ARG (C 宏), 695
ESP_ERR_ESPNOW_BASE (C 宏), 695
ESP_ERR_ESPNOW_EXIST (C 宏), 696
ESP_ERR_ESPNOW_FULL (C 宏), 695
ESP_ERR_ESPNOW_IF (C 宏), 696
ESP_ERR_ESPNOW_INTERNAL (C 宏), 696
ESP_ERR_ESPNOW_NO_MEM (C 宏), 695
ESP_ERR_ESPNOW_NOT_FOUND (C 宏), 696
ESP_ERR_ESPNOW_NOT_INIT (C 宏), 695
ESP_ERR_FLASH_BASE (C 宏), 1239
ESP_ERR_FLASH_OP_FAIL (C 宏), 1239
ESP_ERR_FLASH_OP_TIMEOUT (C 宏), 1239
ESP_ERR_HTTP_BASE (C 宏), 1120
ESP_ERR_HTTP_CONNECT (C 宏), 1120
ESP_ERR_HTTP_CONNECTING (C 宏), 1120
ESP_ERR_HTTP_EAGAIN (C 宏), 1120
ESP_ERR_HTTP_FETCH_HEADER (C 宏), 1120
ESP_ERR_HTTP_INVALID_TRANSPORT (C 宏), 1120
ESP_ERR_HTTP_MAX_REDIRECT (C 宏), 1120
ESP_ERR_HTTP_WRITE_DATA (C 宏), 1120
ESP_ERR_HTTPD_ALLOC_MEM (C 宏), 1151
ESP_ERR_HTTPD_BASE (C 宏), 1151
ESP_ERR_HTTPD_HANDLER_EXISTS (C 宏), 1151
ESP_ERR_HTTPD_HANDLERS_FULL (C 宏), 1151
ESP_ERR_HTTPD_INVALID_REQ (C 宏), 1151
ESP_ERR_HTTPD_RESP_HDR (C 宏), 1151
ESP_ERR_HTTPD_RESP_SEND (C 宏), 1151
ESP_ERR_HTTPD_RESULT_TRUNC (C 宏), 1151
ESP_ERR_HTTPD_TASK (C 宏), 1151
ESP_ERR_HTTPS_OTA_BASE (C 宏), 1588
ESP_ERR_HTTPS_OTA_IN_PROGRESS (C 宏), 1588
ESP_ERR_INVALID_ARG (C 宏), 1593
ESP_ERR_INVALID_CRC (C 宏), 1593
ESP_ERR_INVALID_MAC (C 宏), 1593
ESP_ERR_INVALID_RESPONSE (C 宏), 1593
ESP_ERR_INVALID_SIZE (C 宏), 1593
ESP_ERR_INVALID_STATE (C 宏), 1593
ESP_ERR_INVALID_VERSION (C 宏), 1593
ESP_ERR_MESH_ARGUMENT (C 宏), 736
ESP_ERR_MESH_BASE (C 宏), 1593
ESP_ERR_MESH_DISCARD (C 宏), 737
ESP_ERR_MESH_DISCARD_DUPLICATE (C 宏), 737
ESP_ERR_MESH_DISCONNECTED (C 宏), 737
ESP_ERR_MESH_EXCEED_MTU (C 宏), 736
ESP_ERR_MESH_INTERFACE (C 宏), 737
ESP_ERR_MESH_NO_MEMORY (C 宏), 736
ESP_ERR_MESH_NO_PARENT_FOUND (C 宏), 737
ESP_ERR_MESH_NO_ROUTE_FOUND (C 宏), 737
ESP_ERR_MESH_NOT_ALLOWED (C 宏), 736
ESP_ERR_MESH_NOT_CONFIG (C 宏), 736
ESP_ERR_MESH_NOT_INIT (C 宏), 736
ESP_ERR_MESH_NOT_START (C 宏), 736
ESP_ERR_MESH_NOT_SUPPORT (C 宏), 736
ESP_ERR_MESH_OPTION_NULL (C 宏), 737
ESP_ERR_MESH_OPTION_UNKNOWN (C 宏), 737

ESP_ERR_MESH_QUEUE_FAIL (C 宏), 737
ESP_ERR_MESH_QUEUE_FULL (C 宏), 737
ESP_ERR_MESH_QUEUE_READ (C 宏), 737
ESP_ERR_MESH_RECV_RELEASE (C 宏), 737
ESP_ERR_MESH_TIMEOUT (C 宏), 737
ESP_ERR_MESH_VOTING (C 宏), 737
ESP_ERR_MESH_WIFI_NOT_START (C 宏), 736
ESP_ERR_MESH_XMIT (C 宏), 737
ESP_ERR_MESH_XON_NO_WINDOW (C 宏), 737
ESP_ERR_NO_MEM (C 宏), 1593
ESP_ERR_NOT_FOUND (C 宏), 1593
ESP_ERR_NOT_SUPPORTED (C 宏), 1593
ESP_ERR_NVS_BASE (C 宏), 1282
ESP_ERR_NVS_CORRUPT_KEY_PART (C 宏), 1284
ESP_ERR_NVS_ENCR_NOT_SUPPORTED (C 宏), 1283
ESP_ERR_NVS_INVALID_HANDLE (C 宏), 1283
ESP_ERR_NVS_INVALID_LENGTH (C 宏), 1283
ESP_ERR_NVS_INVALID_NAME (C 宏), 1283
ESP_ERR_NVS_INVALID_STATE (C 宏), 1283
ESP_ERR_NVS_KEY_TOO_LONG (C 宏), 1283
ESP_ERR_NVS_KEYS_NOT_INITIALIZED (C 宏), 1284
ESP_ERR_NVS_NEW_VERSION_FOUND (C 宏), 1283
ESP_ERR_NVS_NO_FREE_PAGES (C 宏), 1283
ESP_ERR_NVS_NOT_ENOUGH_SPACE (C 宏), 1282
ESP_ERR_NVS_NOT_FOUND (C 宏), 1282
ESP_ERR_NVS_NOT_INITIALIZED (C 宏), 1282
ESP_ERR_NVS_PAGE_FULL (C 宏), 1283
ESP_ERR_NVS_PART_NOT_FOUND (C 宏), 1283
ESP_ERR_NVS_READ_ONLY (C 宏), 1282
ESP_ERR_NVS_REMOVE_FAILED (C 宏), 1283
ESP_ERR_NVS_TYPE_MISMATCH (C 宏), 1282
ESP_ERR_NVS_VALUE_TOO_LONG (C 宏), 1283
ESP_ERR_NVS_XTS_CFG_FAILED (C 宏), 1283
ESP_ERR_NVS_XTS_CFG_NOT_FOUND (C 宏), 1283
ESP_ERR_NVS_XTS_DECR_FAILED (C 宏), 1283
ESP_ERR_NVS_XTS_ENCR_FAILED (C 宏), 1283
ESP_ERR_OTA_BASE (C 宏), 1583
ESP_ERR_OTA_PARTITION_CONFLICT (C 宏), 1583
ESP_ERR_OTA_ROLLBACK_FAILED (C 宏), 1583
ESP_ERR_OTA_ROLLBACK_INVALID_STATE (C 宏), 1584
ESP_ERR_OTA_SELECT_INFO_INVALID (C 宏), 1583
ESP_ERR_OTA_SMALL_SEC_VER (C 宏), 1583
ESP_ERR_OTA_VALIDATE_FAILED (C 宏), 1583
esp_err_t (C++ 类型), 1594
ESP_ERR_TCPIP_ADAPTER_BASE (C 宏), 769
ESP_ERR_TCPIP_ADAPTER_DHCP_ALREADY_STARTED (C 宏), 769
ESP_ERR_TCPIP_ADAPTER_DHCP_ALREADY_STOPPED (C 宏), 769
ESP_ERR_TCPIP_ADAPTER_DHCP_NOT_STOPPED (C 宏), 769
ESP_ERR_TCPIP_ADAPTER_DHCPC_START_FAILED (C 宏), 769
ESP_ERR_TCPIP_ADAPTER_IF_NOT_READY (C 宏), 769
ESP_ERR_TCPIP_ADAPTER_INVALID_PARAMS (C 宏), 769
ESP_ERR_TCPIP_ADAPTER_NO_MEM (C 宏), 769
ESP_ERR_TIMEOUT (C 宏), 1593
esp_err_to_name (C++ 函数), 1592
esp_err_to_name_r (C++ 函数), 1592
ESP_ERR_ULP_BASE (C 宏), 2035
ESP_ERR_ULP_BRANCH_OUT_OF_RANGE (C 宏), 2036
ESP_ERR_ULP_DUPLICATE_LABEL (C 宏), 2036
ESP_ERR_ULP_INVALID_LOAD_ADDR (C 宏), 2036
ESP_ERR_ULP_SIZE_TOO_BIG (C 宏), 2035
ESP_ERR_ULP_UNDEFINED_LABEL (C 宏), 2036
ESP_ERR_WIFI_BASE (C 宏), 1593
ESP_ERR_WIFI_CONN (C 宏), 662
ESP_ERR_WIFI_IF (C 宏), 662
ESP_ERR_WIFI_INIT_STATE (C 宏), 663
ESP_ERR_WIFI_MAC (C 宏), 662
ESP_ERR_WIFI_MODE (C 宏), 662
ESP_ERR_WIFI_NOT_CONNECT (C 宏), 663
ESP_ERR_WIFI_NOT_INIT (C 宏), 662
ESP_ERR_WIFI_NOT_STARTED (C 宏), 662
ESP_ERR_WIFI_NOT_STOPPED (C 宏), 662
ESP_ERR_WIFI_NVS (C 宏), 662
ESP_ERR_WIFI_PASSWORD (C 宏), 662
ESP_ERR_WIFI_POST (C 宏), 663
ESP_ERR_WIFI_SSID (C 宏), 662
ESP_ERR_WIFI_STATE (C 宏), 662
ESP_ERR_WIFI_STOP_STATE (C 宏), 663
ESP_ERR_WIFI_TIMEOUT (C 宏), 663

ESP_ERR_WIFI_WAKE_FAIL (C 宏), 663
ESP_ERR_WIFI_WOULD_BLOCK (C 宏), 663
ESP_ERROR_CHECK (C 宏), 1593
ESP_ERROR_CHECK_WITHOUT_ABORT (C 宏), 1594
esp_esptouch_set_timeout (C++ 函数), 685
esp_eth_deinit (C++ 函数), 745
esp_eth_disable (C++ 函数), 746
esp_eth_enable (C++ 函数), 745
esp_eth_free_rx_buf (C++ 函数), 747
esp_eth_get_mac (C++ 函数), 746
esp_eth_get_speed (C++ 函数), 747
esp_eth_init (C++ 函数), 744
esp_eth_init_internal (C++ 函数), 745
esp_eth_set_mac (C++ 函数), 747
esp_eth_smi_read (C++ 函数), 746
esp_eth_smi_wait_set (C++ 函数), 747
esp_eth_smi_wait_value (C++ 函数), 746
esp_eth_smi_write (C++ 函数), 746
esp_eth_tx (C++ 函数), 745
ESP_EVENT_ANY_BASE (C 宏), 1545
ESP_EVENT_ANY_ID (C 宏), 1545
esp_event_base_t (C++ 类型), 1545
ESP_EVENT_DECLARE_BASE (C 宏), 1545
ESP_EVENT_DEFINE_BASE (C 宏), 1545
esp_event_dump (C++ 函数), 1543
esp_event_handler_register (C++ 函数), 1540
esp_event_handler_register_with (C++ 函数), 1541
esp_event_handler_t (C++ 类型), 1545
esp_event_handler_unregister (C++ 函数), 1541
esp_event_handler_unregister_with (C++ 函数), 1542
esp_event_loop_args_t (C++ 类), 1545
esp_event_loop_args_t::queue_size (C++ 成员), 1545
esp_event_loop_args_t::task_core_id (C++ 成员), 1545
esp_event_loop_args_t::task_name (C++ 成员), 1545
esp_event_loop_args_t::task_priority (C++ 成员), 1545
esp_event_loop_args_t::task_stack_size (C++ 成员), 1545
esp_event_loop_create (C++ 函数), 1538
esp_event_loop_create_default (C++ 函数), 1539
esp_event_loop_delete (C++ 函数), 1538
esp_event_loop_delete_default (C++ 函数), 1539
esp_event_loop_handle_t (C++ 类型), 1545
esp_event_loop_run (C++ 函数), 1539
esp_event_post (C++ 函数), 1542
esp_event_post_to (C++ 函数), 1543
ESP_EXT1_WAKEUP_ALL_LOW (C++ 枚举子), 1570
ESP_EXT1_WAKEUP_ANY_HIGH (C++ 枚举子), 1570
ESP_FAIL (C 宏), 1593
esp_fill_random (C++ 函数), 1599
esp_flash_encrypt_check_and_update (C++ 函数), 1248
esp_flash_encrypt_region (C++ 函数), 1248
esp_flash_encryption_enabled (C++ 函数), 1248
esp_flash_write_protect_crypt_cnt (C++ 函数), 1248
esp_freertos_idle_cb_t (C++ 类型), 1461
esp_freertos_tick_cb_t (C++ 类型), 1461
ESP_GAP_BLE_ADD_WHITELIST_COMPLETE_EVT (C 宏), 197
ESP_GAP_BLE_ADV_DATA_RAW_SET_COMPLETE_EVT (C++ 枚举子), 198
ESP_GAP_BLE_ADV_DATA_SET_COMPLETE_EVT (C++ 枚举子), 198
ESP_GAP_BLE_ADV_START_COMPLETE_EVT (C++ 枚举子), 198
ESP_GAP_BLE_ADV_STOP_COMPLETE_EVT (C++ 枚举子), 199
ESP_GAP_BLE_AUTH_CMPL_EVT (C++ 枚举子), 198
esp_gap_ble_cb_event_t (C++ 类型), 198
esp_gap_ble_cb_t (C++ 类型), 198
ESP_GAP_BLE_CLEAR_BOND_DEV_COMPLETE_EVT (C++ 枚举子), 199
ESP_GAP_BLE_EVT_MAX (C++ 枚举子), 199
ESP_GAP_BLE_GET_BOND_DEV_COMPLETE_EVT (C++ 枚举子), 199
ESP_GAP_BLE_KEY_EVT (C++ 枚举子), 198

ESP_GAP_BLE_LOCAL_ER_EVT (C++ 枚举子), 199
ESP_GAP_BLE_LOCAL_IR_EVT (C++ 枚举子), 199
ESP_GAP_BLE_NC_REQ_EVT (C++ 枚举子), 199
ESP_GAP_BLE_OOB_REQ_EVT (C++ 枚举子), 199
ESP_GAP_BLE_PASSKEY_NOTIF_EVT (C++ 枚举子), 199
ESP_GAP_BLE_PASSKEY_REQ_EVT (C++ 枚举子), 199
ESP_GAP_BLE_READ_RSSI_COMPLETE_EVT (C++ 枚举子), 199
ESP_GAP_BLE_REMOVE_BOND_DEV_COMPLETE_EVT (C++ 枚举子), 199
ESP_GAP_BLE_SCAN_PARAM_SET_COMPLETE_EVT (C++ 枚举子), 198
ESP_GAP_BLE_SCAN_RESULT_EVT (C++ 枚举子), 198
ESP_GAP_BLE_SCAN_RSP_DATA_RAW_SET_COMPLETE_EVT (C++ 枚举子), 198
ESP_GAP_BLE_SCAN_RSP_DATA_SET_COMPLETE_EVT (C++ 枚举子), 198
ESP_GAP_BLE_SCAN_START_COMPLETE_EVT (C++ 枚举子), 198
ESP_GAP_BLE_SCAN_STOP_COMPLETE_EVT (C++ 枚举子), 199
ESP_GAP_BLE_SEC_REQ_EVT (C++ 枚举子), 198
esp_gap_ble_set_authorization (C++ 函数), 179
ESP_GAP_BLE_SET_LOCAL_PRIVACY_COMPLETE_EVT (C++ 枚举子), 199
ESP_GAP_BLE_SET_PKT_LENGTH_COMPLETE_EVT (C++ 枚举子), 199
ESP_GAP_BLE_SET_STATIC_RAND_ADDR_EVT (C++ 枚举子), 199
ESP_GAP_BLE_UPDATE_CONN_PARAMS_EVT (C++ 枚举子), 199
ESP_GAP_BLE_UPDATE_DUPLICATE_EXCEPTIONAL_LIST_COMPLETE_EVT (C++ 枚举子), 199
ESP_GAP_BLE_UPDATE_WHITELIST_COMPLETE_EVT (C++ 枚举子), 199
ESP_GAP_SEARCH_DI_DISC_CMPL_EVT (C++ 枚举子), 204
ESP_GAP_SEARCH_DISC_BLE_RES_EVT (C++ 枚举子), 204
ESP_GAP_SEARCH_DISC_CMPL_EVT (C++ 枚举子), 204
ESP_GAP_SEARCH_DISC_RES_EVT (C++ 枚举子), 203
esp_gap_search_evt_t (C++ 类型), 203
ESP_GAP_SEARCH_INQ_CMPL_EVT (C++ 枚举子), 203
ESP_GAP_SEARCH_INQ_DISCARD_NUM_EVT (C++ 枚举子), 204
ESP_GAP_SEARCH_INQ_RES_EVT (C++ 枚举子), 203
ESP_GAP_SEARCH_SEARCH_CANCEL_CMPL_EVT (C++ 枚举子), 204
ESP_GATT_ALREADY_OPEN (C++ 枚举子), 217
ESP_GATT_APP_RSP (C++ 枚举子), 217
ESP_GATT_ATTR_HANDLE_MAX (C 宏), 214
ESP_GATT_AUTH_FAIL (C++ 枚举子), 217
ESP_GATT_AUTH_REQ_MITM (C++ 枚举子), 218
ESP_GATT_AUTH_REQ_NO_MITM (C++ 枚举子), 218
ESP_GATT_AUTH_REQ_NONE (C++ 枚举子), 218
ESP_GATT_AUTH_REQ_SIGNED_MITM (C++ 枚举子), 218
ESP_GATT_AUTH_REQ_SIGNED_NO_MITM (C++ 枚举子), 218
esp_gatt_auth_req_t (C++ 类型), 218
ESP_GATT_AUTO_RSP (C 宏), 215
ESP_GATT_BODY_SENSOR_LOCATION (C 宏), 214
ESP_GATT_BUSY (C++ 枚举子), 216
ESP_GATT_CANCEL (C++ 枚举子), 217
ESP_GATT_CCC_CFG_ERR (C++ 枚举子), 217
ESP_GATT_CHAR_PROP_BIT_AUTH (C 宏), 215
ESP_GATT_CHAR_PROP_BIT_BROADCAST (C 宏), 215
ESP_GATT_CHAR_PROP_BIT_EXT_PROP (C 宏), 215
ESP_GATT_CHAR_PROP_BIT_INDICATE (C 宏), 215
ESP_GATT_CHAR_PROP_BIT_NOTIFY (C 宏), 215
ESP_GATT_CHAR_PROP_BIT_READ (C 宏), 215
ESP_GATT_CHAR_PROP_BIT_WRITE (C 宏), 215
ESP_GATT_CHAR_PROP_BIT_WRITE_NR (C 宏), 215
esp_gatt_char_prop_t (C++ 类型), 215
ESP_GATT_CMD_STARTED (C++ 枚举子), 216
ESP_GATT_CONGESTED (C++ 枚举子), 217
ESP_GATT_CONN_CONN_CANCEL (C++ 枚举子), 218
ESP_GATT_CONN_FAIL_ESTABLISH (C++ 枚举子), 218
ESP_GATT_CONN_L2C_FAILURE (C++ 枚举子), 217
ESP_GATT_CONN_LMP_TIMEOUT (C++ 枚举子), 218
ESP_GATT_CONN_NONE (C++ 枚举子), 218

esp_gatt_conn_reason_t (C++ 类型), 217
ESP_GATT_CONN_TERMINATE_LOCAL_HOST (C++ 枚举子), 217
ESP_GATT_CONN_TERMINATE_PEER_USER (C++ 枚举子), 217
ESP_GATT_CONN_TIMEOUT (C++ 枚举子), 217
ESP_GATT_CONN_UNKNOWN (C++ 枚举子), 217
ESP_GATT_DB_ALL (C++ 枚举子), 219
esp_gatt_db_attr_type_t (C++ 类型), 218
ESP_GATT_DB_CHARACTERISTIC (C++ 枚举子), 219
ESP_GATT_DB_DESCRIPTOR (C++ 枚举子), 219
ESP_GATT_DB_FULL (C++ 枚举子), 216
ESP_GATT_DB_INCLUDED_SERVICE (C++ 枚举子), 219
ESP_GATT_DB_PRIMARY_SERVICE (C++ 枚举子), 218
ESP_GATT_DB_SECONDARY_SERVICE (C++ 枚举子), 219
ESP_GATT_DUP_REG (C++ 枚举子), 217
ESP_GATT_ENCRYPED_MITM (C++ 枚举子), 217
ESP_GATT_ENCRYPED_NO_MITM (C++ 枚举子), 217
ESP_GATT_ERR_UNLIKELY (C++ 枚举子), 216
ESP_GATT_ERROR (C++ 枚举子), 216
ESP_GATT_HEART_RATE_CNTL_POINT (C 宏), 214
ESP_GATT_HEART_RATE_MEAS (C 宏), 214
esp_gatt_id_t (C++ 类), 206
esp_gatt_id_t::inst_id (C++ 成员), 206
esp_gatt_id_t::uuid (C++ 成员), 206
ESP_GATT_IF_NONE (C 宏), 215
esp_gatt_if_t (C++ 类型), 215
ESP_GATT_ILLEGAL_HANDLE (C 宏), 214
ESP_GATT_ILLEGAL_PARAMETER (C++ 枚举子), 217
ESP_GATT_ILLEGAL_UUID (C 宏), 214
ESP_GATT_INSUF_AUTHENTICATION (C++ 枚举子), 216
ESP_GATT_INSUF_AUTHORIZATION (C++ 枚举子), 216
ESP_GATT_INSUF_ENCRYPTION (C++ 枚举子), 216
ESP_GATT_INSUF_KEY_SIZE (C++ 枚举子), 216
ESP_GATT_INSUF_RESOURCE (C++ 枚举子), 216
ESP_GATT_INTERNAL_ERROR (C++ 枚举子), 216
ESP_GATT_INVALID_ATTR_LEN (C++ 枚举子), 216
ESP_GATT_INVALID_CFG (C++ 枚举子), 217
ESP_GATT_INVALID_HANDLE (C++ 枚举子), 216
ESP_GATT_INVALID_OFFSET (C++ 枚举子), 216
ESP_GATT_INVALID_PDU (C++ 枚举子), 216
ESP_GATT_MAX_ATTR_LEN (C 宏), 215
ESP_GATT_MAX_READ_MULTI_HANDLES (C 宏), 214
ESP_GATT_MORE (C++ 枚举子), 217
ESP_GATT_NO_RESOURCES (C++ 枚举子), 216
ESP_GATT_NOT_ENCRYPTED (C++ 枚举子), 217
ESP_GATT_NOT_FOUND (C++ 枚举子), 216
ESP_GATT_NOT_LONG (C++ 枚举子), 216
ESP_GATT_OK (C++ 枚举子), 216
ESP_GATT_OUT_OF_RANGE (C++ 枚举子), 217
ESP_GATT_PENDING (C++ 枚举子), 217
ESP_GATT_PERM_READ (C 宏), 214
ESP_GATT_PERM_READ_AUTHORIZATION (C 宏), 215
ESP_GATT_PERM_READ_ENC_MITM (C 宏), 214
ESP_GATT_PERM_READ_ENCRYPTED (C 宏), 214
esp_gatt_perm_t (C++ 类型), 215
ESP_GATT_PERM_WRITE (C 宏), 214
ESP_GATT_PERM_WRITE_AUTHORIZATION (C 宏), 215
ESP_GATT_PERM_WRITE_ENC_MITM (C 宏), 215
ESP_GATT_PERM_WRITE_ENCRYPTED (C 宏), 214
ESP_GATT_PERM_WRITE_SIGNED (C 宏), 215
ESP_GATT_PERM_WRITE_SIGNED_MITM (C 宏), 215
ESP_GATT_PRC_IN_PROGRESS (C++ 枚举子), 217
ESP_GATT_PREP_WRITE_CANCEL (C 宏), 234
ESP_GATT_PREP_WRITE_CANCEL (C++ 枚举子), 215
ESP_GATT_PREP_WRITE_EXEC (C 宏), 234
ESP_GATT_PREP_WRITE_EXEC (C++ 枚举子), 216
esp_gatt_prep_write_type (C++ 类型), 215
ESP_GATT_PREPARE_Q_FULL (C++ 枚举子), 216
ESP_GATT_READ_NOT_PERMIT (C++ 枚举子), 216
ESP_GATT_REQ_NOT_SUPPORTED (C++ 枚举子), 216
ESP_GATT_RSP_BY_APP (C 宏), 215
esp_gatt_rsp_t (C++ 类型), 206
esp_gatt_rsp_t::attr_value (C++ 成员), 206
esp_gatt_rsp_t::handle (C++ 成员), 206
ESP_GATT_SERVICE_FROM_NVS_FLASH (C++ 枚举子), 218
ESP_GATT_SERVICE_FROM_REMOTE_DEVICE (C++ 枚举子), 218

ESP_GATT_SERVICE_FROM_UNKNOWN (C++ 枚举子), 218
ESP_GATT_SERVICE_STARTED (C++ 枚举子), 217
esp_gatt_srvc_id_t (C++ 类), 206
esp_gatt_srvc_id_t::id (C++ 成员), 207
esp_gatt_srvc_id_t::is_primary (C++ 成员), 207
ESP_GATT_STACK_RSP (C++ 枚举子), 217
esp_gatt_status_t (C++ 类型), 216
ESP_GATT_UNKNOWN_ERROR (C++ 枚举子), 217
ESP_GATT_UNSUPPORT_GRP_TYPE (C++ 枚举子), 216
ESP_GATT_UUID_ALERT_LEVEL (C 宏), 213
ESP_GATT_UUID_ALERT_NTF_SVC (C 宏), 212
ESP_GATT_UUID_ALERT_STATUS (C 宏), 213
ESP_GATT_UUID_BATTERY_LEVEL (C 宏), 214
ESP_GATT_UUID_BATTERY_SERVICE_SVC (C 宏), 211
ESP_GATT_UUID_BLOOD_PRESSURE_SVC (C 宏), 211
ESP_GATT_UUID_CHAR_AGG_FORMAT (C 宏), 212
ESP_GATT_UUID_CHAR_CLIENT_CONFIG (C 宏), 212
ESP_GATT_UUID_CHAR_DECLARE (C 宏), 212
ESP_GATT_UUID_CHAR_DESCRIPTION (C 宏), 212
ESP_GATT_UUID_CHAR_EXT_PROP (C 宏), 212
ESP_GATT_UUID_CHAR_PRESENT_FORMAT (C 宏), 212
ESP_GATT_UUID_CHAR_SRVR_CONFIG (C 宏), 212
ESP_GATT_UUID_CHAR_VALID_RANGE (C 宏), 212
ESP_GATT_UUID_CSC_FEATURE (C 宏), 214
ESP_GATT_UUID_CSC_MEASUREMENT (C 宏), 214
ESP_GATT_UUID_CURRENT_TIME (C 宏), 213
ESP_GATT_UUID_CURRENT_TIME_SVC (C 宏), 211
ESP_GATT_UUID_CYCLING_POWER_SVC (C 宏), 212
ESP_GATT_UUID_CYCLING_SPEED_CADENCE_SVC (C 宏), 212
ESP_GATT_UUID_DEVICE_INFO_SVC (C 宏), 211
ESP_GATT_UUID_ENV_SENSING_CONFIG_DESCR (C 宏), 212
ESP_GATT_UUID_ENV_SENSING_MEASUREMENT_DESCR (C 宏), 212
ESP_GATT_UUID_ENV_SENSING_TRIGGER_DESCR (C 宏), 212
ESP_GATT_UUID_EXT_RPT_REF_DESCR (C 宏), 212
ESP_GATT_UUID_FW_VERSION_STR (C 宏), 213
ESP_GATT_UUID_GAP_CENTRAL_ADDR_RESOL (C 宏), 213
ESP_GATT_UUID_GAP_DEVICE_NAME (C 宏), 212
ESP_GATT_UUID_GAP_ICON (C 宏), 212
ESP_GATT_UUID_GAP_PREF_CONN_PARAM (C 宏), 213
ESP_GATT_UUID_GATT_SRV_CHGD (C 宏), 213
ESP_GATT_UUID_GLUCOSE_SVC (C 宏), 211
ESP_GATT_UUID_GM_CONTEXT (C 宏), 213
ESP_GATT_UUID_GM_CONTROL_POINT (C 宏), 213
ESP_GATT_UUID_GM_FEATURE (C 宏), 213
ESP_GATT_UUID_GM_MEASUREMENT (C 宏), 213
ESP_GATT_UUID_HEALTH_THERMOM_SVC (C 宏), 211
ESP_GATT_UUID_HEART_RATE_SVC (C 宏), 211
ESP_GATT_UUID_HID_BT_KB_INPUT (C 宏), 214
ESP_GATT_UUID_HID_BT_KB_OUTPUT (C 宏), 214
ESP_GATT_UUID_HID_BT_MOUSE_INPUT (C 宏), 214
ESP_GATT_UUID_HID_CONTROL_POINT (C 宏), 213
ESP_GATT_UUID_HID_INFORMATION (C 宏), 213
ESP_GATT_UUID_HID_PROTO_MODE (C 宏), 214
ESP_GATT_UUID_HID_REPORT (C 宏), 213
ESP_GATT_UUID_HID_REPORT_MAP (C 宏), 213
ESP_GATT_UUID_HID_SVC (C 宏), 212
ESP_GATT_UUID_HW_VERSION_STR (C 宏), 213
ESP_GATT_UUID_IEEE_DATA (C 宏), 213
ESP_GATT_UUID_IMMEDIATE_ALERT_SVC (C 宏), 211
ESP_GATT_UUID_INCLUDE_SERVICE (C 宏), 212
ESP_GATT_UUID_LINK_LOSS_SVC (C 宏), 211
ESP_GATT_UUID_LOCAL_TIME_INFO (C 宏), 213
ESP_GATT_UUID_LOCATION_AND_NAVIGATION_SVC (C 宏), 212
ESP_GATT_UUID_MANU_NAME (C 宏), 213
ESP_GATT_UUID_MODEL_NUMBER_STR (C 宏), 213
ESP_GATT_UUID_NEXT_DST_CHANGE_SVC (C 宏), 211
ESP_GATT_UUID_NUM_DIGITALS_DESCR (C 宏), 212
ESP_GATT_UUID_NW_STATUS (C 宏), 213
ESP_GATT_UUID_NW_TRIGGER (C 宏), 213
ESP_GATT_UUID_PHONE_ALERT_STATUS_SVC (C 宏), 211
ESP_GATT_UUID_PNP_ID (C 宏), 213
ESP_GATT_UUID_PRI_SERVICE (C 宏), 212
ESP_GATT_UUID_REF_TIME_INFO (C 宏), 213
ESP_GATT_UUID_REF_TIME_UPDATE_SVC (C 宏), 211
ESP_GATT_UUID_RINGER_CP (C 宏), 213

ESP_GATT_UUID_RINGER_SETTING (C 宏), 213
ESP_GATT_UUID_RPT_REF_DESCR (C 宏), 212
ESP_GATT_UUID_RSC_FEATURE (C 宏), 214
ESP_GATT_UUID_RSC_MEASUREMENT (C 宏), 214
ESP_GATT_UUID_RUNNING_SPEED_CADENCE_SVC (C 宏), 212
ESP_GATT_UUID_SC_CONTROL_POINT (C 宏), 214
ESP_GATT_UUID_SCAN_INT_WINDOW (C 宏), 214
ESP_GATT_UUID_SCAN_PARAMETERS_SVC (C 宏), 212
ESP_GATT_UUID_SCAN_REFRESH (C 宏), 214
ESP_GATT_UUID_SEC_SERVICE (C 宏), 212
ESP_GATT_UUID_SENSOR_LOCATION (C 宏), 214
ESP_GATT_UUID_SERIAL_NUMBER_STR (C 宏), 213
ESP_GATT_UUID_SW_VERSION_STR (C 宏), 213
ESP_GATT_UUID_SYSTEM_ID (C 宏), 213
ESP_GATT_UUID_TIME_TRIGGER_DESCR (C 宏), 212
ESP_GATT_UUID_TX_POWER_LEVEL (C 宏), 213
ESP_GATT_UUID_TX_POWER_SVC (C 宏), 211
ESP_GATT_UUID_USER_DATA_SVC (C 宏), 212
ESP_GATT_UUID_VALUE_TRIGGER_DESCR (C 宏), 212
ESP_GATT_UUID_WEIGHT_SCALE_SVC (C 宏), 212
esp_gatt_value_t (C++ 类), 208
esp_gatt_value_t::auth_req (C++ 成员), 209
esp_gatt_value_t::handle (C++ 成员), 209
esp_gatt_value_t::len (C++ 成员), 209
esp_gatt_value_t::offset (C++ 成员), 209
esp_gatt_value_t::value (C++ 成员), 209
ESP_GATT_WRITE_NOT_PERMIT (C++ 枚举子), 216
ESP_GATT_WRITE_TYPE_NO_RSP (C++ 枚举子), 218
ESP_GATT_WRITE_TYPE_RSP (C++ 枚举子), 218
esp_gatt_write_type_t (C++ 类型), 218
ESP_GATT_WRONG_STATE (C++ 枚举子), 216
ESP_GATTC_ACL_EVT (C++ 枚举子), 258
ESP_GATTC_ADV_DATA_EVT (C++ 枚举子), 258
ESP_GATTC_ADV_VSC_EVT (C++ 枚举子), 259
ESP_GATTC_BTH_SCAN_CFG_EVT (C++ 枚举子), 259
ESP_GATTC_BTH_SCAN_DIS_EVT (C++ 枚举子), 259
ESP_GATTC_BTH_SCAN_ENB_EVT (C++ 枚举子), 259
ESP_GATTC_BTH_SCAN_PARAM_EVT (C++ 枚举子), 259
ESP_GATTC_BTH_SCAN_RD_EVT (C++ 枚举子), 259
ESP_GATTC_BTH_SCAN_THR_EVT (C++ 枚举子), 259
ESP_GATTC_CANCEL_OPEN_EVT (C++ 枚举子), 258
esp_gattc_cb_event_t (C++ 类型), 257
esp_gattc_cb_t (C++ 类型), 257
ESP_GATTC_CFG_MTU_EVT (C++ 枚举子), 258
esp_gattc_char_elem_t (C++ 类), 210
esp_gattc_char_elem_t::char_handle (C++ 成员), 210
esp_gattc_char_elem_t::properties (C++ 成员), 210
esp_gattc_char_elem_t::uuid (C++ 成员), 210
ESP_GATTC_CLOSE_EVT (C++ 枚举子), 257
ESP_GATTC_CONGEST_EVT (C++ 枚举子), 258
ESP_GATTC_CONNECT_EVT (C++ 枚举子), 259
esp_gattc_db_elem_t (C++ 类), 209
esp_gattc_db_elem_t::attribute_handle (C++ 成员), 209
esp_gattc_db_elem_t::end_handle (C++ 成员), 209
esp_gattc_db_elem_t::properties (C++ 成员), 210
esp_gattc_db_elem_t::start_handle (C++ 成员), 209
esp_gattc_db_elem_t::type (C++ 成员), 209
esp_gattc_db_elem_t::uuid (C++ 成员), 210
esp_gattc_descr_elem_t (C++ 类), 210
esp_gattc_descr_elem_t::handle (C++ 成员), 211
esp_gattc_descr_elem_t::uuid (C++ 成员), 211
ESP_GATTC_DISCONNECT_EVT (C++ 枚举子), 259
ESP_GATTC_ENC_CMPL_CB_EVT (C++ 枚举子), 258
ESP_GATTC_EXEC_EVT (C++ 枚举子), 258
ESP_GATTC_GET_ADDR_LIST_EVT (C++ 枚举子), 260
esp_gattc_incl_svc_elem_t (C++ 类), 211
esp_gattc_incl_svc_elem_t::handle (C++ 成员), 211
esp_gattc_incl_svc_elem_t::incl_srvc_e_handle (C++ 成员), 211
esp_gattc_incl_svc_elem_t::incl_srvc_s_handle (C++ 成员), 211
esp_gattc_incl_svc_elem_t::uuid (C++ 成员), 211
ESP_GATTC_MULT_ADV_DATA_EVT (C++ 枚举子), 258

ESP_GATTC_MULT_ADV_DIS_EVT (C++ 枚举子), 258
ESP_GATTC_MULT_ADV_ENB_EVT (C++ 枚举子), 258
ESP_GATTC_MULT_ADV_UPD_EVT (C++ 枚举子), 258
esp_gattc_multi_t (C++ 类), 209
esp_gattc_multi_t::handles (C++ 成员), 209
esp_gattc_multi_t::num_attr (C++ 成员), 209
ESP_GATTC_NOTIFY_EVT (C++ 枚举子), 258
ESP_GATTC_OPEN_EVT (C++ 枚举子), 257
ESP_GATTC_PREP_WRITE_EVT (C++ 枚举子), 258
ESP_GATTC_QUEUE_FULL_EVT (C++ 枚举子), 259
ESP_GATTC_READ_CHAR_EVT (C++ 枚举子), 257
ESP_GATTC_READ_DESCR_EVT (C++ 枚举子), 258
ESP_GATTC_READ_MULTIPLE_EVT (C++ 枚举子), 259
ESP_GATTC_REG_EVT (C++ 枚举子), 257
ESP_GATTC_REG_FOR_NOTIFY_EVT (C++ 枚举子), 259
ESP_GATTC_SCAN_FLT_CFG_EVT (C++ 枚举子), 259
ESP_GATTC_SCAN_FLT_PARAM_EVT (C++ 枚举子), 259
ESP_GATTC_SCAN_FLT_STATUS_EVT (C++ 枚举子), 259
ESP_GATTC_SEARCH_CMPL_EVT (C++ 枚举子), 257
ESP_GATTC_SEARCH_RES_EVT (C++ 枚举子), 258
esp_gattc_service_elem_t (C++ 类), 210
esp_gattc_service_elem_t::end_handle (C++ 成员), 210
esp_gattc_service_elem_t::is_primary (C++ 成员), 210
esp_gattc_service_elem_t::start_handle (C++ 成员), 210
esp_gattc_service_elem_t::uuid (C++ 成员), 210
ESP_GATTC_SET_ASSOC_EVT (C++ 枚举子), 259
ESP_GATTC_SRVC_CHG_EVT (C++ 枚举子), 258
ESP_GATTC_UNREG_EVT (C++ 枚举子), 257
ESP_GATTC_UNREG_FOR_NOTIFY_EVT (C++ 枚举子), 259
ESP_GATTC_WRITE_CHAR_EVT (C++ 枚举子), 257
ESP_GATTC_WRITE_DESCR_EVT (C++ 枚举子), 258
ESP_GATTS_ADD_CHAR_DESCR_EVT (C++ 枚举子), 235
ESP_GATTS_ADD_CHAR_EVT (C++ 枚举子), 235
ESP_GATTS_ADD_INCL_SRVC_EVT (C++ 枚举子), 235
esp_gatts_attr_db_t (C++ 类), 207
esp_gatts_attr_db_t::att_desc (C++ 成员), 208
esp_gatts_attr_db_t::attr_control (C++ 成员), 208
ESP_GATTS_CANCEL_OPEN_EVT (C++ 枚举子), 236
esp_gatts_cb_event_t (C++ 类型), 235
esp_gatts_cb_t (C++ 类型), 234
ESP_GATTS_CLOSE_EVT (C++ 枚举子), 236
ESP_GATTS_CONF_EVT (C++ 枚举子), 235
ESP_GATTS_CONGEST_EVT (C++ 枚举子), 236
ESP_GATTS_CONNECT_EVT (C++ 枚举子), 235
ESP_GATTS_CREAT_ATTR_TAB_EVT (C++ 枚举子), 236
ESP_GATTS_CREATE_EVT (C++ 枚举子), 235
ESP_GATTS_DELETE_EVT (C++ 枚举子), 235
ESP_GATTS_DISCONNECT_EVT (C++ 枚举子), 236
ESP_GATTS_EXEC_WRITE_EVT (C++ 枚举子), 235
esp_gatts_incl128_svc_desc_t (C++ 类), 208
esp_gatts_incl128_svc_desc_t::end_hdl (C++ 成员), 208
esp_gatts_incl128_svc_desc_t::start_hdl (C++ 成员), 208
esp_gatts_incl_svc_desc_t (C++ 类), 208
esp_gatts_incl_svc_desc_t::end_hdl (C++ 成员), 208
esp_gatts_incl_svc_desc_t::start_hdl (C++ 成员), 208
esp_gatts_incl_svc_desc_t::uuid (C++ 成员), 208
ESP_GATTS_LISTEN_EVT (C++ 枚举子), 236
ESP_GATTS_MTU_EVT (C++ 枚举子), 235
ESP_GATTS_OPEN_EVT (C++ 枚举子), 236
ESP_GATTS_READ_EVT (C++ 枚举子), 235
ESP_GATTS_REG_EVT (C++ 枚举子), 235
ESP_GATTS_RESPONSE_EVT (C++ 枚举子), 236
ESP_GATTS_SEND_SERVICE_CHANGE_EVT (C++ 枚举子), 236
ESP_GATTS_SET_ATTR_VAL_EVT (C++ 枚举子), 236
ESP_GATTS_START_EVT (C++ 枚举子), 235
ESP_GATTS_STOP_EVT (C++ 枚举子), 235
ESP_GATTS_UNREG_EVT (C++ 枚举子), 235

ESP_GATTS_WRITE_EVT (C++ 枚举子), 235
esp_gcov_dump (C++ 函数), 1552
esp_get_deep_sleep_wake_stub (C++ 函数), 1569
esp_get_free_heap_size (C++ 函数), 1598
esp_get_free_internal_heap_size (C++ 函数), 1598
esp_get_idf_version (C++ 函数), 1603
esp_get_minimum_free_heap_size (C++ 函数), 1598
ESP_HF_AT_RESPONSE_CODE_BLACKLISTED (C++ 枚举子), 324
ESP_HF_AT_RESPONSE_CODE_BUSY (C++ 枚举子), 324
ESP_HF_AT_RESPONSE_CODE_CME (C++ 枚举子), 324
ESP_HF_AT_RESPONSE_CODE_DELAYED (C++ 枚举子), 324
ESP_HF_AT_RESPONSE_CODE_ERR (C++ 枚举子), 324
ESP_HF_AT_RESPONSE_CODE_NO_ANSWER (C++ 枚举子), 324
ESP_HF_AT_RESPONSE_CODE_NO_CARRIER (C++ 枚举子), 324
ESP_HF_AT_RESPONSE_CODE_OK (C++ 枚举子), 324
esp_hf_at_response_code_t (C++ 类型), 324
ESP_HF_BTRH_CMD_ACCEPT (C++ 枚举子), 324
ESP_HF_BTRH_CMD_HOLD (C++ 枚举子), 324
ESP_HF_BTRH_CMD_REJECT (C++ 枚举子), 324
esp_hf_btrh_cmd_t (C++ 类型), 324
ESP_HF_BTRH_STATUS_ACCEPTED (C++ 枚举子), 323
ESP_HF_BTRH_STATUS_HELD (C++ 枚举子), 323
ESP_HF_BTRH_STATUS_REJECTED (C++ 枚举子), 323
esp_hf_btrh_status_t (C++ 类型), 323
ESP_HF_CALL_ADDR_TYPE_INTERNATIONAL (C++ 枚举子), 323
esp_hf_call_addr_type_t (C++ 类型), 323
ESP_HF_CALL_ADDR_TYPE_UNKNOWN (C++ 枚举子), 323
ESP_HF_CALL_HELD_STATUS_HELD (C++ 枚举子), 321
ESP_HF_CALL_HELD_STATUS_HELD_AND_ACTIVE (C++ 枚举子), 321
ESP_HF_CALL_HELD_STATUS_NONE (C++ 枚举子), 321
esp_hf_call_held_status_t (C++ 类型), 321
ESP_HF_CALL_SETUP_STATUS_INCOMING (C++ 枚举子), 321
ESP_HF_CALL_SETUP_STATUS_NONE (C++ 枚举子), 321
ESP_HF_CALL_SETUP_STATUS_OUTGOING_ALERTING (C++ 枚举子), 321
ESP_HF_CALL_SETUP_STATUS_OUTGOING_DIALING (C++ 枚举子), 321
esp_hf_call_setup_status_t (C++ 类型), 321
ESP_HF_CALL_STATUS_CALL_IN_PROGRESS (C++ 枚举子), 321
ESP_HF_CALL_STATUS_NO_CALLS (C++ 枚举子), 321
esp_hf_call_status_t (C++ 类型), 321
ESP_HF_CHLD_TYPE_HOLD_ACC (C++ 枚举子), 325
ESP_HF_CHLD_TYPE_MERGE (C++ 枚举子), 325
ESP_HF_CHLD_TYPE_MERGE_DETACH (C++ 枚举子), 325
ESP_HF_CHLD_TYPE_PRIV_X (C++ 枚举子), 325
ESP_HF_CHLD_TYPE_REL (C++ 枚举子), 325
ESP_HF_CHLD_TYPE_REL_ACC (C++ 枚举子), 325
ESP_HF_CHLD_TYPE_REL_X (C++ 枚举子), 325
esp_hf_chld_type_t (C++ 类型), 325
esp_hf_client_answer_call (C++ 函数), 331
ESP_HF_CLIENT_AT_RESPONSE_EVT (C++ 枚举子), 343
ESP_HF_CLIENT_AUDIO_STATE_CONNECTED (C++ 枚举子), 341
ESP_HF_CLIENT_AUDIO_STATE_CONNECTED_MSBC (C++ 枚举子), 341
ESP_HF_CLIENT_AUDIO_STATE_CONNECTING (C++ 枚举子), 341
ESP_HF_CLIENT_AUDIO_STATE_DISCONNECTED (C++ 枚举子), 341
ESP_HF_CLIENT_AUDIO_STATE_EVT (C++ 枚举子), 342
esp_hf_client_audio_state_t (C++ 类型), 341
ESP_HF_CLIENT_BINP_EVT (C++ 枚举子), 343
ESP_HF_CLIENT_BSIR_EVT (C++ 枚举子), 343
ESP_HF_CLIENT_BTRH_EVT (C++ 枚举子), 342
ESP_HF_CLIENT_BVRA_EVT (C++ 枚举子), 342
esp_hf_client_cb_event_t (C++ 类型), 342

esp_hf_client_cb_param_t (C++ 类型), 334
esp_hf_client_cb_param_t::at_response (C++ 成员), 335
esp_hf_client_cb_param_t::audio_stat (C++ 成员), 334
esp_hf_client_cb_param_t::battery_level (C++ 成员), 334
esp_hf_client_cb_param_t::binp (C++ 成员), 335
esp_hf_client_cb_param_t::bsir (C++ 成员), 335
esp_hf_client_cb_param_t::btrh (C++ 成员), 334
esp_hf_client_cb_param_t::bvra (C++ 成员), 334
esp_hf_client_cb_param_t::call (C++ 成员), 334
esp_hf_client_cb_param_t::call_held (C++ 成员), 334
esp_hf_client_cb_param_t::call_setup (C++ 成员), 334
esp_hf_client_cb_param_t::ccwa (C++ 成员), 334
esp_hf_client_cb_param_t::clcc (C++ 成员), 334
esp_hf_client_cb_param_t::clip (C++ 成员), 334
esp_hf_client_cb_param_t::cnum (C++ 成员), 335
esp_hf_client_cb_param_t::conn_stat (C++ 成员), 334
esp_hf_client_cb_param_t::cops (C++ 成员), 334
esp_hf_client_cb_param_t::hf_client_at_response_param (C++ 类), 335
esp_hf_client_cb_param_t::hf_client_at_response_param::code (C++ 成员), 335
esp_hf_client_cb_param_t::hf_client_at_response_param::cme (C++ 成员), 335
esp_hf_client_cb_param_t::hf_client_audio_stat_param (C++ 类), 335
esp_hf_client_cb_param_t::hf_client_audio_stat_param::state (C++ 成员), 335
esp_hf_client_cb_param_t::hf_client_battery_level_ind_param (C++ 类), 335
esp_hf_client_cb_param_t::hf_client_battery_level_ind_param::value (C++ 成员), 335
esp_hf_client_cb_param_t::hf_client_binp_param (C++ 类), 335
esp_hf_client_cb_param_t::hf_client_binp_param::number (C++ 成员), 336
esp_hf_client_cb_param_t::hf_client_bsirparam (C++ 类), 336
esp_hf_client_cb_param_t::hf_client_bsirparam::state (C++ 成员), 336
esp_hf_client_cb_param_t::hf_client_btrh_param (C++ 类), 336
esp_hf_client_cb_param_t::hf_client_btrh_param::status (C++ 成员), 336
esp_hf_client_cb_param_t::hf_client_bvra_param (C++ 类), 336
esp_hf_client_cb_param_t::hf_client_bvra_param::value (C++ 成员), 336
esp_hf_client_cb_param_t::hf_client_call_held_ind_param (C++ 类), 336
esp_hf_client_cb_param_t::hf_client_call_held_ind_param::status (C++ 成员), 336
esp_hf_client_cb_param_t::hf_client_call_ind_param (C++ 类), 336
esp_hf_client_cb_param_t::hf_client_call_ind_param::status (C++ 成员), 337
esp_hf_client_cb_param_t::hf_client_call_setup_ind_param (C++ 类), 337
esp_hf_client_cb_param_t::hf_client_call_setup_ind_param::status (C++ 成员), 337
esp_hf_client_cb_param_t::hf_client_ccwa_param (C++ 类), 337
esp_hf_client_cb_param_t::hf_client_ccwa_param::number (C++ 成员), 337
esp_hf_client_cb_param_t::hf_client_clcc_param (C++ 类), 337
esp_hf_client_cb_param_t::hf_client_clcc_param::dir

(C++ 成员), 337
esp_hf_client_cb_param_t::hf_client_clcc_param::idx (C++ 成员), 337
esp_hf_client_cb_param_t::hf_client_clcc_param::mpty (C++ 成员), 337
esp_hf_client_cb_param_t::hf_client_clcc_param::number (C++ 成员), 337
esp_hf_client_cb_param_t::hf_client_clcc_param::status (C++ 成员), 337
esp_hf_client_cb_param_t::hf_client_clip_param (C++ 类), 337
esp_hf_client_cb_param_t::hf_client_clip_param::number (C++ 成员), 338
esp_hf_client_cb_param_t::hf_client_cnum_param (C++ 类), 338
esp_hf_client_cb_param_t::hf_client_cnum_param::number (C++ 成员), 338
esp_hf_client_cb_param_t::hf_client_cnum_param::type (C++ 成员), 338
esp_hf_client_cb_param_t::hf_client_conn_stat_param (C++ 类), 338
esp_hf_client_cb_param_t::hf_client_conn_stat_param::call_setup (C++ 成员), 338
esp_hf_client_cb_param_t::hf_client_conn_stat_param::call_state (C++ 成员), 338
esp_hf_client_cb_param_t::hf_client_conn_stat_param::cind_service (C++ 成员), 338
esp_hf_client_cb_param_t::hf_client_conn_stat_param::service_type (C++ 成员), 338
esp_hf_client_cb_param_t::hf_client_current_operator_param (C++ 类), 338
esp_hf_client_cb_param_t::hf_client_current_operator_param::name (C++ 成员), 338
esp_hf_client_cb_param_t::hf_client_network_roaming_param (C++ 类), 338
esp_hf_client_cb_param_t::hf_client_network_roaming_param::status (C++ 成员), 339
esp_hf_client_cb_param_t::hf_client_service_availability_param (C++ 类), 339
esp_hf_client_cb_param_t::hf_client_service_availability_param::status (C++ 成员), 339
esp_hf_client_cb_param_t::hf_client_signal_strength_ind_param (C++ 类), 339
esp_hf_client_cb_param_t::hf_client_signal_strength_ind_param::value (C++ 成员), 339
esp_hf_client_cb_param_t::hf_client_volume_control_param (C++ 类), 339
esp_hf_client_cb_param_t::hf_client_volume_control_param::type (C++ 成员), 339
esp_hf_client_cb_param_t::hf_client_volume_control_param::volume (C++ 成员), 339
esp_hf_client_cb_param_t::roaming (C++ 成员), 334
esp_hf_client_cb_param_t::service_availability (C++ 成员), 334
esp_hf_client_cb_param_t::signal_strength (C++ 成员), 334
esp_hf_client_cb_param_t::volume_control (C++ 成员), 335
esp_hf_client_cb_t (C++ 类型), 341
ESP_HF_CLIENT_CCWA_EVT (C++ 枚举子), 342
ESP_HF_CLIENT_CHLD_FEAT_HOLD_ACC (C 宏), 340
ESP_HF_CLIENT_CHLD_FEAT_MERGE (C 宏), 340
ESP_HF_CLIENT_CHLD_FEAT_MERGE_DETACH (C 宏), 340
ESP_HF_CLIENT_CHLD_FEAT_PRIV_X (C 宏), 340
ESP_HF_CLIENT_CHLD_FEAT_REL (C 宏), 340
ESP_HF_CLIENT_CHLD_FEAT_REL_ACC (C 宏), 340
ESP_HF_CLIENT_CHLD_FEAT_REL_X (C 宏), 340
ESP_HF_CLIENT_CIND_BATTERY_LEVEL_EVT (C++ 枚举子), 342
ESP_HF_CLIENT_CIND_CALL_EVT (C++ 枚举子), 342
ESP_HF_CLIENT_CIND_CALL_HELD_EVT (C++ 枚举子), 342
ESP_HF_CLIENT_CIND_CALL_SETUP_EVT (C++ 枚举子), 342
ESP_HF_CLIENT_CIND_ROAMING_STATUS_EVT (C++ 枚举子), 342
ESP_HF_CLIENT_CIND_SERVICE_AVAILABILITY_EVT (C++ 枚举子), 342
ESP_HF_CLIENT_CIND_SIGNAL_STRENGTH_EVT (C++ 枚举子), 342
ESP_HF_CLIENT_CLCC_EVT (C++ 枚举子), 342
ESP_HF_CLIENT_CLIP_EVT (C++ 枚举子), 342

ESP_HF_CLIENT_CNUM_EVT (C++ 枚举子), 343
esp_hf_client_connect (C++ 函数), 328
esp_hf_client_connect_audio (C++ 函数), 328
ESP_HF_CLIENT_CONNECTION_STATE_CONNECTED (C++ 枚举子), 341
ESP_HF_CLIENT_CONNECTION_STATE_CONNECTING (C++ 枚举子), 341
ESP_HF_CLIENT_CONNECTION_STATE_DISCONNECTED (C++ 枚举子), 341
ESP_HF_CLIENT_CONNECTION_STATE_DISCONNECTING (C++ 枚举子), 341
ESP_HF_CLIENT_CONNECTION_STATE_EVT (C++ 枚举子), 342
ESP_HF_CLIENT_CONNECTION_STATE_SLC_CONNECTED (C++ 枚举子), 341
esp_hf_client_connection_state_t (C++ 类型), 341
ESP_HF_CLIENT_COPS_CURRENT_OPERATOR_EVT (C++ 枚举子), 342
esp_hf_client_deinit (C++ 函数), 327
esp_hf_client_dial (C++ 函数), 329
esp_hf_client_dial_memory (C++ 函数), 330
esp_hf_client_disconnect (C++ 函数), 328
esp_hf_client_disconnect_audio (C++ 函数), 328
esp_hf_client_in_band_ring_state_t (C++ 类型), 341
ESP_HF_CLIENT_IN_BAND_RINGTONE_NOT_PROVIDED (C++ 枚举子), 342
ESP_HF_CLIENT_IN_BAND_RINGTONE_PROVIDED (C++ 枚举子), 342
esp_hf_client_incoming_data_cb_t (C++ 类型), 340
esp_hf_client_init (C++ 函数), 327
esp_hf_client_outgoing_data_cb_t (C++ 类型), 340
esp_hf_client_outgoing_data_ready (C++ 函数), 333
esp_hf_client_pcm_resample (C++ 函数), 333
esp_hf_client_pcm_resample_init (C++ 函数), 333
ESP_HF_CLIENT_PEER_FEAT_3WAY (C 宏), 339
ESP_HF_CLIENT_PEER_FEAT_CODEC (C 宏), 340
ESP_HF_CLIENT_PEER_FEAT_ECC (C 宏), 340
ESP_HF_CLIENT_PEER_FEAT_ECNR (C 宏), 339
ESP_HF_CLIENT_PEER_FEAT_ECS (C 宏), 340
ESP_HF_CLIENT_PEER_FEAT_EXTERR (C 宏), 340
ESP_HF_CLIENT_PEER_FEAT_INBAND (C 宏), 339
ESP_HF_CLIENT_PEER_FEAT_REJECT (C 宏), 339
ESP_HF_CLIENT_PEER_FEAT_VREC (C 宏), 339
ESP_HF_CLIENT_PEER_FEAT_VTAG (C 宏), 339
esp_hf_client_query_current_calls (C++ 函数), 331
esp_hf_client_query_current_operator_name (C++ 函数), 331
esp_hf_client_register_callback (C++ 函数), 327
esp_hf_client_register_data_callback (C++ 函数), 332
esp_hf_client_reject_call (C++ 函数), 331
esp_hf_client_request_last_voice_tag_number (C++ 函数), 332
esp_hf_client_retrieve_subscriber_info (C++ 函数), 332
ESP_HF_CLIENT_RING_IND_EVT (C++ 枚举子), 343
esp_hf_client_send_btrh_cmd (C++ 函数), 330
esp_hf_client_send_chld_cmd (C++ 函数), 330
esp_hf_client_send_dtmf (C++ 函数), 332
esp_hf_client_start_voice_recognition (C++ 函数), 329
esp_hf_client_stop_voice_recognition (C++ 函数), 329
ESP_HF_CLIENT_VOLUME_CONTROL_EVT (C++ 枚举子), 343
esp_hf_client_volume_update (C++ 函数), 329
ESP_HF_CME_AG_FAILURE (C++ 枚举子), 325
ESP_HF_CME_DIAL_STRING_TOO_LONG (C++ 枚举子), 326
esp_hf_cme_err_t (C++ 类型), 325
ESP_HF_CME_INCORRECT_PASSWORD (C++ 枚举子), 326
ESP_HF_CME_INVALID_CHARACTERS_IN_DIAL_STRING (C++ 枚举子), 326
ESP_HF_CME_INVALID_CHARACTERS_IN_TEXT_STRING

(C++ 枚举子), 326
ESP_HF_CME_INVALID_INDEX (C++ 枚举子), 326
ESP_HF_CME_MEMEORY_FAILURE (C++ 枚举子), 326
ESP_HF_CME_MEMEORY_FULL (C++ 枚举子), 326
ESP_HF_CME_NETWORK_NOT_ALLOWED (C++ 枚举子), 326
ESP_HF_CME_NETWORK_TIMEOUT (C++ 枚举子), 326
ESP_HF_CME_NO_CONNECTION_TO_PHONE (C++ 枚举子), 325
ESP_HF_CME_NO_NETWORK_SERVICE (C++ 枚举子), 326
ESP_HF_CME_OPERATION_NOT_ALLOWED (C++ 枚举子), 325
ESP_HF_CME_OPERATION_NOT_SUPPORTED (C++ 枚举子), 325
ESP_HF_CME_PH_SIM_PIN_REQUIRED (C++ 枚举子), 325
ESP_HF_CME_SIM_BUSY (C++ 枚举子), 326
ESP_HF_CME_SIM_FAILURE (C++ 枚举子), 326
ESP_HF_CME_SIM_NOT_INSERTED (C++ 枚举子), 325
ESP_HF_CME_SIM_PIN2_REQUIRED (C++ 枚举子), 326
ESP_HF_CME_SIM_PIN_REQUIRED (C++ 枚举子), 325
ESP_HF_CME_SIM_PUK2_REQUIRED (C++ 枚举子), 326
ESP_HF_CME_SIM_PUK_REQUIRED (C++ 枚举子), 326
ESP_HF_CME_TEXT_STRING_TOO_LONG (C++ 枚举子), 326
ESP_HF_CURRENT_CALL_DIRECTION_INCOMING (C++ 枚举子), 322
ESP_HF_CURRENT_CALL_DIRECTION_OUTGOING (C++ 枚举子), 322
esp_hf_current_call_direction_t (C++ 类型), 322
ESP_HF_CURRENT_CALL_MODE_DATA (C++ 枚举子), 323
ESP_HF_CURRENT_CALL_MODE_FAX (C++ 枚举子), 323
esp_hf_current_call_mode_t (C++ 类型), 323
ESP_HF_CURRENT_CALL_MODE_VOICE (C++ 枚举子), 323
ESP_HF_CURRENT_CALL_MPTY_TYPE_MULTI (C++ 枚举子), 323
ESP_HF_CURRENT_CALL_MPTY_TYPE_SINGLE (C++ 枚举子), 323
esp_hf_current_call_mpty_type_t (C++ 类型), 322
ESP_HF_CURRENT_CALL_STATUS_ACTIVE (C++ 枚举子), 322
ESP_HF_CURRENT_CALL_STATUS_ALERTING (C++ 枚举子), 322
ESP_HF_CURRENT_CALL_STATUS_DIALING (C++ 枚举子), 322
ESP_HF_CURRENT_CALL_STATUS_HELD (C++ 枚举子), 322
ESP_HF_CURRENT_CALL_STATUS_HELD_BY_RESP_HOLD (C++ 枚举子), 322
ESP_HF_CURRENT_CALL_STATUS_INCOMING (C++ 枚举子), 322
esp_hf_current_call_status_t (C++ 类型), 322
ESP_HF_CURRENT_CALL_STATUS_WAITING (C++ 枚举子), 322
ESP_HF_ROAMING_STATUS_ACTIVE (C++ 枚举子), 321
ESP_HF_ROAMING_STATUS_INACTIVE (C++ 枚举子), 321
esp_hf_roaming_status_t (C++ 类型), 321
ESP_HF_SERVICE_AVAILABILITY_STATUS_AVAILABLE (C++ 枚举子), 322
esp_hf_service_availability_status_t (C++ 类型), 322
ESP_HF_SERVICE_AVAILABILITY_STATUS_UNAVAILABLE (C++ 枚举子), 322
ESP_HF_SUBSCRIBER_SERVICE_TYPE_FAX (C++ 枚举子), 323
esp_hf_subscriber_service_type_t (C++ 类型), 323
ESP_HF_SUBSCRIBER_SERVICE_TYPE_UNKNOWN (C++ 枚举子), 323
ESP_HF_SUBSCRIBER_SERVICE_TYPE_VOICE (C++ 枚举子), 323
ESP_HF_VOLUME_CONTROL_TARGET_MIC (C++ 枚举子), 320
ESP_HF_VOLUME_CONTROL_TARGET_SPK (C++ 枚举

子), 320
esp_hf_volume_control_target_t (C++ 类型), 320
ESP_HF_VR_STATE_DISABLED (C++ 枚举子), 324
ESP_HF_VR_STATE_ENABLED (C++ 枚举子), 325
esp_hf_vr_state_t (C++ 类型), 324
esp_himem_alloc (C++ 函数), 1488
esp_himem_alloc_map_range (C++ 函数), 1488
ESP_HIMEM_BLKSZ (C 宏), 1490
esp_himem_free (C++ 函数), 1489
esp_himem_free_map_range (C++ 函数), 1489
esp_himem_get_free_size (C++ 函数), 1490
esp_himem_get_phys_size (C++ 函数), 1490
esp_himem_handle_t (C++ 类型), 1491
esp_himem_map (C++ 函数), 1489
ESP_HIMEM_MAPFLAG_RO (C 宏), 1490
esp_himem_rangehandle_t (C++ 类型), 1491
esp_himem_reserved_area_size (C++ 函数), 1490
esp_himem_unmap (C++ 函数), 1490
esp_http_client_add_auth (C++ 函数), 1117
esp_http_client_auth_type_t (C++ 类型), 1122
esp_http_client_cleanup (C++ 函数), 1116
esp_http_client_close (C++ 函数), 1116
esp_http_client_config_t (C++ 类), 1118
esp_http_client_config_t::auth_type (C++ 成员), 1118
esp_http_client_config_t::buffer_size (C++ 成员), 1119
esp_http_client_config_t::cert_pem (C++ 成员), 1119
esp_http_client_config_t::client_cert_pem (C++ 成员), 1119
esp_http_client_config_t::client_key_pem (C++ 成员), 1119
esp_http_client_config_t::disable_auto_redirect (C++ 成员), 1119
esp_http_client_config_t::event_handler (C++ 成员), 1119
esp_http_client_config_t::host (C++ 成员), 1118
esp_http_client_config_t::is_async (C++ 成员), 1119
esp_http_client_config_t::keep_alive_count (C++ 成员), 1120
esp_http_client_config_t::keep_alive_enable (C++ 成员), 1120
esp_http_client_config_t::keep_alive_idle (C++ 成员), 1120
esp_http_client_config_t::keep_alive_interval (C++ 成员), 1120
esp_http_client_config_t::max_redirection_count (C++ 成员), 1119
esp_http_client_config_t::method (C++ 成员), 1119
esp_http_client_config_t::password (C++ 成员), 1118
esp_http_client_config_t::path (C++ 成员), 1119
esp_http_client_config_t::port (C++ 成员), 1118
esp_http_client_config_t::query (C++ 成员), 1119
esp_http_client_config_t::skip_cert_common_name_check (C++ 成员), 1119
esp_http_client_config_t::timeout_ms (C++ 成员), 1119
esp_http_client_config_t::transport_type (C++ 成员), 1119
esp_http_client_config_t::url (C++ 成员), 1118
esp_http_client_config_t::use_global_ca_store (C++ 成员), 1119
esp_http_client_config_t::user_agent (C++ 成员), 1119
esp_http_client_config_t::user_data (C++ 成员), 1119
esp_http_client_config_t::username (C++ 成员), 1118
esp_http_client_delete_header (C++ 函数), 1114
esp_http_client_event (C++ 类), 1118
esp_http_client_event::client (C++ 成员), 1118
esp_http_client_event::data (C++ 成员), 1118

esp_http_client_event::data_len (C++ 成员), 1118
esp_http_client_event::event_id (C++ 成员), 1118
esp_http_client_event::header_key (C++ 成员), 1118
esp_http_client_event::header_value (C++ 成员), 1118
esp_http_client_event::user_data (C++ 成员), 1118
esp_http_client_event_handle_t (C++ 类型), 1120
esp_http_client_event_id_t (C++ 类型), 1121
esp_http_client_event_t (C++ 类型), 1120
esp_http_client_fetch_headers (C++ 函数), 1115
esp_http_client_get_content_length (C++ 函数), 1116
esp_http_client_get_header (C++ 函数), 1112
esp_http_client_get_password (C++ 函数), 1113
esp_http_client_get_post_field (C++ 函数), 1111
esp_http_client_get_status_code (C++ 函数), 1115
esp_http_client_get_transport_type (C++ 函数), 1116
esp_http_client_get_username (C++ 函数), 1112
esp_http_client_handle_t (C++ 类型), 1120
esp_http_client_init (C++ 函数), 1110
esp_http_client_is_chunked_response (C++ 函数), 1115
esp_http_client_is_complete_data_received (C++ 函数), 1117
esp_http_client_method_t (C++ 类型), 1121
esp_http_client_open (C++ 函数), 1114
esp_http_client_perform (C++ 函数), 1110
esp_http_client_read (C++ 函数), 1115
esp_http_client_set_header (C++ 函数), 1111
esp_http_client_set_method (C++ 函数), 1113
esp_http_client_set_password (C++ 函数), 1113
esp_http_client_set_post_field (C++ 函数), 1111
esp_http_client_set_redirection (C++ 函数), 1117
esp_http_client_set_url (C++ 函数), 1111
esp_http_client_set_username (C++ 函数), 1112
esp_http_client_transport_t (C++ 类型), 1121
esp_http_client_write (C++ 函数), 1114
esp_https_ota (C++ 函数), 1585
esp_https_ota_begin (C++ 函数), 1585
esp_https_ota_config_t (C++ 类), 1588
esp_https_ota_config_t::http_config (C++ 成员), 1588
esp_https_ota_finish (C++ 函数), 1587
esp_https_ota_get_image_len_read (C++ 函数), 1588
esp_https_ota_get_img_desc (C++ 函数), 1587
esp_https_ota_handle_t (C++ 类型), 1588
esp_https_ota_is_complete_data_received (C++ 函数), 1587
esp_https_ota_perform (C++ 函数), 1586
ESP_IDF_VERSION (C 宏), 1604
ESP_IDF_VERSION_MAJOR (C 宏), 1604
ESP_IDF_VERSION_MINOR (C 宏), 1604
ESP_IDF_VERSION_PATCH (C 宏), 1604
ESP_IDF_VERSION_VAL (C 宏), 1604
esp_int_wdt_init (C++ 函数), 1501
esp_intr_alloc (C++ 函数), 1494
esp_intr_alloc_intrstatus (C++ 函数), 1495
esp_intr_disable (C++ 函数), 1496
esp_intr_enable (C++ 函数), 1497
ESP_INTR_FLAG_EDGE (C 宏), 1498
ESP_INTR_FLAG_HIGH (C 宏), 1498
ESP_INTR_FLAG_INTRDISABLED (C 宏), 1498
ESP_INTR_FLAG_IRAM (C 宏), 1498
ESP_INTR_FLAG_LEVEL1 (C 宏), 1497
ESP_INTR_FLAG_LEVEL2 (C 宏), 1497
ESP_INTR_FLAG_LEVEL3 (C 宏), 1497
ESP_INTR_FLAG_LEVEL4 (C 宏), 1497
ESP_INTR_FLAG_LEVEL5 (C 宏), 1498
ESP_INTR_FLAG_LEVEL6 (C 宏), 1498
ESP_INTR_FLAG_LEVELMASK (C 宏), 1498
ESP_INTR_FLAG_LOWMED (C 宏), 1498
ESP_INTR_FLAG_NMI (C 宏), 1498

ESP_INTR_FLAG_SHARED (C 宏), 1498
esp_intr_free (C++ 函数), 1496
esp_intr_get_cpu (C++ 函数), 1496
esp_intr_get_intno (C++ 函数), 1496
esp_intr_mark_shared (C++ 函数), 1493
esp_intr_noniram_disable (C++ 函数), 1497
esp_intr_noniram_enable (C++ 函数), 1497
esp_intr_reserve (C++ 函数), 1494
esp_intr_set_in_iram (C++ 函数), 1497
ESP_IO_CAP_IN (C 宏), 195
ESP_IO_CAP_IO (C 宏), 195
ESP_IO_CAP_KBDISP (C 宏), 195
ESP_IO_CAP_NONE (C 宏), 195
ESP_IO_CAP_OUT (C 宏), 195
esp_ipc_call (C++ 函数), 1519
esp_ipc_call_blocking (C++ 函数), 1520
ESP_LE_AUTH_BOND (C 宏), 195
ESP_LE_AUTH_NO_BOND (C 宏), 195
ESP_LE_AUTH_REQ_BOND_MITM (C 宏), 195
ESP_LE_AUTH_REQ_MITM (C 宏), 195
ESP_LE_AUTH_REQ_SC_BOND (C 宏), 195
ESP_LE_AUTH_REQ_SC_MITM (C 宏), 195
ESP_LE_AUTH_REQ_SC_MITM_BOND (C 宏), 195
ESP_LE_AUTH_REQ_SC_ONLY (C 宏), 195
ESP_LE_KEY_LCSRK (C 宏), 195
ESP_LE_KEY_LENC (C 宏), 195
ESP_LE_KEY_LID (C 宏), 195
ESP_LE_KEY_LLK (C 宏), 195
ESP_LE_KEY_NONE (C 宏), 194
ESP_LE_KEY_PCSRK (C 宏), 194
ESP_LE_KEY_PENC (C 宏), 194
ESP_LE_KEY_PID (C 宏), 194
ESP_LE_KEY_PLK (C 宏), 194
esp_light_sleep_start (C++ 函数), 1568
ESP_LINE_ENDINGS_CR (C++ 枚举子), 1301
ESP_LINE_ENDINGS_CRLF (C++ 枚举子), 1301
ESP_LINE_ENDINGS_LF (C++ 枚举子), 1301
esp_line_endings_t (C++ 类型), 1301
esp_link_key (C++ 类型), 165
ESP_LOG_BUFFER_CHAR (C 宏), 1531
ESP_LOG_BUFFER_CHAR_LEVEL (C 宏), 1530
ESP_LOG_BUFFER_HEX (C 宏), 1531
ESP_LOG_BUFFER_HEX_LEVEL (C 宏), 1530
ESP_LOG_BUFFER_HEXDUMP (C 宏), 1530
ESP_LOG_DEBUG (C++ 枚举子), 1533
ESP_LOG_EARLY_IMPL (C 宏), 1532
esp_log_early_timestamp (C++ 函数), 1529
ESP_LOG_ERROR (C++ 枚举子), 1533
ESP_LOG_INFO (C++ 枚举子), 1533
ESP_LOG_LEVEL (C 宏), 1532
ESP_LOG_LEVEL_LOCAL (C 宏), 1532
esp_log_level_set (C++ 函数), 1528
esp_log_level_t (C++ 类型), 1532
ESP_LOG_NONE (C++ 枚举子), 1532
esp_log_set_vprintf (C++ 函数), 1529
esp_log_timestamp (C++ 函数), 1529
ESP_LOG_VERBOSE (C++ 枚举子), 1533
ESP_LOG_WARN (C++ 枚举子), 1533
esp_log_write (C++ 函数), 1529
ESP_LOGD (C 宏), 1532
ESP_LOGE (C 宏), 1532
ESP_LOGI (C 宏), 1532
ESP_LOGV (C 宏), 1532
ESP_LOGW (C 宏), 1532
ESP_MAC_BT (C++ 枚举子), 1602
ESP_MAC_ETH (C++ 枚举子), 1602
esp_mac_type_t (C++ 类型), 1602
ESP_MAC_WIFI_SOFTAP (C++ 枚举子), 1602
ESP_MAC_WIFI_STA (C++ 枚举子), 1602
esp_mesh_allow_root_conflicts (C++ 函数), 720
esp_mesh_available_txupQ_num (C++ 函数), 720
esp_mesh_connect (C++ 函数), 727
esp_mesh_deinit (C++ 函数), 706
esp_mesh_delete_group_id (C++ 函数), 721
esp_mesh_disconnect (C++ 函数), 726
esp_mesh_fix_root (C++ 函数), 724
esp_mesh_flush_scan_result (C++ 函数), 727
esp_mesh_flush_upstream_packets (C++ 函数), 726
esp_mesh_get_ap_assoc_expire (C++ 函数), 718
esp_mesh_get_ap_authmode (C++ 函数), 715
esp_mesh_get_ap_connections (C++ 函数), 715
esp_mesh_get_capacity_num (C++ 函数), 722
esp_mesh_get_config (C++ 函数), 712

esp_mesh_get_group_list (C++ 函数), 721
esp_mesh_get_group_num (C++ 函数), 721
esp_mesh_get_id (C++ 函数), 713
esp_mesh_get_ie_crypto_key (C++ 函数), 723
esp_mesh_get_layer (C++ 函数), 716
esp_mesh_get_max_layer (C++ 函数), 714
esp_mesh_get_parent_bssid (C++ 函数), 716
esp_mesh_get_root_healing_delay (C++ 函数), 723
esp_mesh_get_router (C++ 函数), 713
esp_mesh_get_router_bssid (C++ 函数), 727
esp_mesh_get_routing_table (C++ 函数), 719
esp_mesh_get_routing_table_size (C++ 函数), 719
esp_mesh_get_rx_pending (C++ 函数), 720
esp_mesh_get_self_organized (C++ 函数), 717
esp_mesh_get_subnet_nodes_list (C++ 函数), 726
esp_mesh_get_subnet_nodes_num (C++ 函数), 726
esp_mesh_get_total_node_num (C++ 函数), 719
esp_mesh_get_tsf_time (C++ 函数), 728
esp_mesh_get_tx_pending (C++ 函数), 719
esp_mesh_get_type (C++ 函数), 714
esp_mesh_get_vote_percentage (C++ 函数), 718
esp_mesh_get_xon_qsize (C++ 函数), 720
esp_mesh_init (C++ 函数), 706
esp_mesh_is_my_group (C++ 函数), 722
esp_mesh_is_root (C++ 函数), 716
esp_mesh_is_root_conflicts_allowed (C++ 函数), 721
esp_mesh_is_root_fixed (C++ 函数), 724
esp_mesh_post_toDS_state (C++ 函数), 719
esp_mesh_recv (C++ 函数), 709
esp_mesh_recv_toDS (C++ 函数), 710
esp_mesh_scan_get_ap_ie_len (C++ 函数), 725
esp_mesh_scan_get_ap_record (C++ 函数), 725
esp_mesh_send (C++ 函数), 708
esp_mesh_set_ap_assoc_expire (C++ 函数), 718
esp_mesh_set_ap_authmode (C++ 函数), 715
esp_mesh_set_ap_connections (C++ 函数), 715
esp_mesh_set_ap_password (C++ 函数), 714
esp_mesh_set_capacity_num (C++ 函数), 722
esp_mesh_set_config (C++ 函数), 711
esp_mesh_set_event_cb (C++ 函数), 723
esp_mesh_set_group_id (C++ 函数), 721
esp_mesh_set_id (C++ 函数), 713
esp_mesh_set_ie_crypto_funcs (C++ 函数), 722
esp_mesh_set_ie_crypto_key (C++ 函数), 723
esp_mesh_set_max_layer (C++ 函数), 714
esp_mesh_set_parent (C++ 函数), 724
esp_mesh_set_root_healing_delay (C++ 函数), 723
esp_mesh_set_router (C++ 函数), 712
esp_mesh_set_self_organized (C++ 函数), 716
esp_mesh_set_type (C++ 函数), 713
esp_mesh_set_vote_percentage (C++ 函数), 718
esp_mesh_set_xon_qsize (C++ 函数), 720
esp_mesh_start (C++ 函数), 707
esp_mesh_stop (C++ 函数), 707
esp_mesh_switch_channel (C++ 函数), 727
esp_mesh_waive_root (C++ 函数), 717
esp_mqtt_client_config_t (C++ 类), 1167
esp_mqtt_client_config_t::alpn_protos (C++ 成员), 1170
esp_mqtt_client_config_t::buffer_size (C++ 成员), 1169
esp_mqtt_client_config_t::cert_len (C++ 成员), 1169
esp_mqtt_client_config_t::cert_pem (C++ 成员), 1169
esp_mqtt_client_config_t::client_cert_len (C++ 成员), 1169
esp_mqtt_client_config_t::client_cert_pem (C++ 成员), 1169
esp_mqtt_client_config_t::client_id (C++ 成员), 1168
esp_mqtt_client_config_t::client_key_len (C++ 成员), 1169
esp_mqtt_client_config_t::client_key_pem (C++ 成员), 1169
esp_mqtt_client_config_t::clientkey_password (C++ 成员), 1170
esp_mqtt_client_config_t::clientkey_password_len (C++ 成员), 1170

esp_mqtt_client_config_t::disable_auto_reconnect (C++ 成员), 1168
esp_mqtt_client_config_t::disable_clean_session (C++ 成员), 1168
esp_mqtt_client_config_t::disable_keepalive (C++ 成员), 1170
esp_mqtt_client_config_t::ds_data (C++ 成员), 1170
esp_mqtt_client_config_t::event_handle (C++ 成员), 1168
esp_mqtt_client_config_t::event_loop_handle (C++ 成员), 1168
esp_mqtt_client_config_t::host (C++ 成员), 1168
esp_mqtt_client_config_t::keepalive (C++ 成员), 1168
esp_mqtt_client_config_t::lwt_msg (C++ 成员), 1168
esp_mqtt_client_config_t::lwt_msg_len (C++ 成员), 1168
esp_mqtt_client_config_t::lwt_qos (C++ 成员), 1168
esp_mqtt_client_config_t::lwt_retain (C++ 成员), 1168
esp_mqtt_client_config_t::lwt_topic (C++ 成员), 1168
esp_mqtt_client_config_t::network_timeout_ms (C++ 成员), 1170
esp_mqtt_client_config_t::out_buffer_size (C++ 成员), 1170
esp_mqtt_client_config_t::password (C++ 成员), 1168
esp_mqtt_client_config_t::port (C++ 成员), 1168
esp_mqtt_client_config_t::protocol_ver (C++ 成员), 1170
esp_mqtt_client_config_t::psk_hint_key (C++ 成员), 1169
esp_mqtt_client_config_t::reconnect_timeout_ms (C++ 成员), 1170
esp_mqtt_client_config_t::refresh_connection_after_ms (C++ 成员), 1169
esp_mqtt_client_config_t::skip_cert_common_name_check (C++ 成员), 1170
esp_mqtt_client_config_t::task_prio (C++ 成员), 1169
esp_mqtt_client_config_t::task_stack (C++ 成员), 1169
esp_mqtt_client_config_t::transport (C++ 成员), 1169
esp_mqtt_client_config_t::uri (C++ 成员), 1168
esp_mqtt_client_config_t::use_global_ca_store (C++ 成员), 1170
esp_mqtt_client_config_t::use_secure_element (C++ 成员), 1170
esp_mqtt_client_config_t::user_context (C++ 成员), 1169
esp_mqtt_client_config_t::username (C++ 成员), 1168
esp_mqtt_client_destroy (C++ 函数), 1165
esp_mqtt_client_disconnect (C++ 函数), 1163
esp_mqtt_client_enqueue (C++ 函数), 1164
esp_mqtt_client_get_outbox_size (C++ 函数), 1166
esp_mqtt_client_handle_t (C++ 类型), 1171
esp_mqtt_client_init (C++ 函数), 1162
esp_mqtt_client_publish (C++ 函数), 1164
esp_mqtt_client_reconnect (C++ 函数), 1162
esp_mqtt_client_register_event (C++ 函数), 1165
esp_mqtt_client_set_uri (C++ 函数), 1162
esp_mqtt_client_start (C++ 函数), 1162
esp_mqtt_client_stop (C++ 函数), 1163
esp_mqtt_client_subscribe (C++ 函数), 1163
esp_mqtt_client_unsubscribe (C++ 函数), 1163
esp_mqtt_connect_return_code_t (C++ 类型), 1172
esp_mqtt_error_codes (C++ 类), 1166
esp_mqtt_error_codes::connect_return_code (C++ 成员), 1167
esp_mqtt_error_codes::error_type (C++ 成员), 1166
esp_mqtt_error_codes::esp_tls_cert_verify_flags

(C++ 成员), 1166
esp_mqtt_error_codes::esp_tls_last_esp_err (C++ 成员), 1166
esp_mqtt_error_codes::esp_tls_stack_err (C++ 成员), 1166
esp_mqtt_error_codes::esp_transport_sock_errno (C++ 成员), 1167
esp_mqtt_error_codes_t (C++ 类型), 1171
esp_mqtt_error_type_t (C++ 类型), 1173
esp_mqtt_event_handle_t (C++ 类型), 1171
esp_mqtt_event_id_t (C++ 类型), 1171
esp_mqtt_event_t (C++ 类), 1167
esp_mqtt_event_t::client (C++ 成员), 1167
esp_mqtt_event_t::current_data_offset (C++ 成员), 1167
esp_mqtt_event_t::data (C++ 成员), 1167
esp_mqtt_event_t::data_len (C++ 成员), 1167
esp_mqtt_event_t::error_handle (C++ 成员), 1167
esp_mqtt_event_t::event_id (C++ 成员), 1167
esp_mqtt_event_t::msg_id (C++ 成员), 1167
esp_mqtt_event_t::session_present (C++ 成员), 1167
esp_mqtt_event_t::topic (C++ 成员), 1167
esp_mqtt_event_t::topic_len (C++ 成员), 1167
esp_mqtt_event_t::total_data_len (C++ 成员), 1167
esp_mqtt_event_t::user_context (C++ 成员), 1167
esp_mqtt_protocol_ver_t (C++ 类型), 1173
esp_mqtt_set_config (C++ 函数), 1165
esp_mqtt_transport_t (C++ 类型), 1173
esp_nimble_hci_and_controller_deinit (C++ 函数), 346
esp_nimble_hci_and_controller_init (C++ 函数), 345
esp_nimble_hci_deinit (C++ 函数), 346
esp_nimble_hci_init (C++ 函数), 345
esp_now_add_peer (C++ 函数), 692
esp_now_deinit (C++ 函数), 690
esp_now_del_peer (C++ 函数), 692
ESP_NOW_ETH_ALEN (C 宏), 696
esp_now_fetch_peer (C++ 函数), 693
esp_now_get_peer (C++ 函数), 693
esp_now_get_peer_num (C++ 函数), 694
esp_now_get_version (C++ 函数), 690
esp_now_init (C++ 函数), 690
esp_now_is_peer_exist (C++ 函数), 694
ESP_NOW_KEY_LEN (C 宏), 696
ESP_NOW_MAX_DATA_LEN (C 宏), 696
ESP_NOW_MAX_ENCRYPT_PEER_NUM (C 宏), 696
ESP_NOW_MAX_TOTAL_PEER_NUM (C 宏), 696
esp_now_mod_peer (C++ 函数), 693
esp_now_peer_info (C++ 类), 694
esp_now_peer_info::channel (C++ 成员), 695
esp_now_peer_info::encrypt (C++ 成员), 695
esp_now_peer_info::ifidx (C++ 成员), 695
esp_now_peer_info::lmk (C++ 成员), 695
esp_now_peer_info::peer_addr (C++ 成员), 695
esp_now_peer_info::priv (C++ 成员), 695
esp_now_peer_info_t (C++ 类型), 696
esp_now_peer_num (C++ 类), 695
esp_now_peer_num::encrypt_num (C++ 成员), 695
esp_now_peer_num::total_num (C++ 成员), 695
esp_now_peer_num_t (C++ 类型), 696
esp_now_recv_cb_t (C++ 类型), 696
esp_now_register_recv_cb (C++ 函数), 690
esp_now_register_send_cb (C++ 函数), 691
esp_now_send (C++ 函数), 691
esp_now_send_cb_t (C++ 类型), 696
ESP_NOW_SEND_FAIL (C++ 枚举子), 697
esp_now_send_status_t (C++ 类型), 697
ESP_NOW_SEND_SUCCESS (C++ 枚举子), 697
esp_now_set_pmk (C++ 函数), 694
esp_now_unregister_recv_cb (C++ 函数), 691
esp_now_unregister_send_cb (C++ 函数), 691
ESP_OK (C 宏), 1593
ESP_OK_EFUSE_CNT (C 宏), 1517
esp_ota_begin (C++ 函数), 1578
esp_ota_check_rollback_is_possible (C++ 函数), 1583
esp_ota_end (C++ 函数), 1579
esp_ota_erase_last_boot_app_partition (C++ 函数), 1583

esp_ota_get_app_description (C++ 函数), 1577
esp_ota_get_app_elf_sha256 (C++ 函数), 1578
esp_ota_get_boot_partition (C++ 函数), 1580
esp_ota_get_last_invalid_partition (C++ 函数), 1582
esp_ota_get_next_update_partition (C++ 函数), 1581
esp_ota_get_partition_description (C++ 函数), 1581
esp_ota_get_running_partition (C++ 函数), 1581
esp_ota_get_state_partition (C++ 函数), 1582
esp_ota_handle_t (C++ 类型), 1584
esp_ota_mark_app_invalid_rollback_and_reboot (C++ 函数), 1582
esp_ota_mark_app_valid_cancel_rollback (C++ 函数), 1582
esp_ota_set_boot_partition (C++ 函数), 1580
esp_ota_write (C++ 函数), 1579
esp_partition_check_identity (C++ 函数), 1244
esp_partition_erase_range (C++ 函数), 1243
esp_partition_find (C++ 函数), 1240
esp_partition_find_first (C++ 函数), 1240
esp_partition_get (C++ 函数), 1241
esp_partition_get_sha256 (C++ 函数), 1244
esp_partition_iterator_release (C++ 函数), 1241
esp_partition_iterator_t (C++ 类型), 1245
esp_partition_mmap (C++ 函数), 1243
esp_partition_next (C++ 函数), 1241
esp_partition_read (C++ 函数), 1242
ESP_PARTITION_SUBTYPE_ANY (C++ 枚举子), 1248
ESP_PARTITION_SUBTYPE_APP_FACTORY (C++ 枚举子), 1246
ESP_PARTITION_SUBTYPE_APP_OTA_0 (C++ 枚举子), 1246
ESP_PARTITION_SUBTYPE_APP_OTA_1 (C++ 枚举子), 1246
ESP_PARTITION_SUBTYPE_APP_OTA_10 (C++ 枚举子), 1247
ESP_PARTITION_SUBTYPE_APP_OTA_11 (C++ 枚举子), 1247
ESP_PARTITION_SUBTYPE_APP_OTA_12 (C++ 枚举子), 1247
ESP_PARTITION_SUBTYPE_APP_OTA_13 (C++ 枚举子), 1247
ESP_PARTITION_SUBTYPE_APP_OTA_14 (C++ 枚举子), 1247
ESP_PARTITION_SUBTYPE_APP_OTA_15 (C++ 枚举子), 1247
ESP_PARTITION_SUBTYPE_APP_OTA_2 (C++ 枚举子), 1246
ESP_PARTITION_SUBTYPE_APP_OTA_3 (C++ 枚举子), 1246
ESP_PARTITION_SUBTYPE_APP_OTA_4 (C++ 枚举子), 1246
ESP_PARTITION_SUBTYPE_APP_OTA_5 (C++ 枚举子), 1246
ESP_PARTITION_SUBTYPE_APP_OTA_6 (C++ 枚举子), 1246
ESP_PARTITION_SUBTYPE_APP_OTA_7 (C++ 枚举子), 1246
ESP_PARTITION_SUBTYPE_APP_OTA_8 (C++ 枚举子), 1247
ESP_PARTITION_SUBTYPE_APP_OTA_9 (C++ 枚举子), 1247
ESP_PARTITION_SUBTYPE_APP_OTA_MAX (C++ 枚举子), 1247
ESP_PARTITION_SUBTYPE_APP_OTA_MIN (C++ 枚举子), 1246
ESP_PARTITION_SUBTYPE_APP_TEST (C++ 枚举子), 1247
ESP_PARTITION_SUBTYPE_DATA_COREDUMP (C++ 枚举子), 1247
ESP_PARTITION_SUBTYPE_DATA_EFUSE_EM (C++ 枚举子), 1247
ESP_PARTITION_SUBTYPE_DATA_ESPHTTPD (C++ 枚举子), 1247
ESP_PARTITION_SUBTYPE_DATA_FAT (C++ 枚举子), 1248
ESP_PARTITION_SUBTYPE_DATA_NVS (C++ 枚举子), 1247
ESP_PARTITION_SUBTYPE_DATA_NVS_KEYS (C++ 枚举子), 1247

ESP_PARTITION_SUBTYPE_DATA_OTA (C++ 枚举子), 1247
ESP_PARTITION_SUBTYPE_DATA_PHY (C++ 枚举子), 1247
ESP_PARTITION_SUBTYPE_DATA_SPIFFS (C++ 枚举子), 1248
ESP_PARTITION_SUBTYPE_OTA (C 宏), 1245
esp_partition_subtype_t (C++ 类型), 1246
esp_partition_t (C++ 类), 1245
esp_partition_t::address (C++ 成员), 1245
esp_partition_t::encrypted (C++ 成员), 1245
esp_partition_t::label (C++ 成员), 1245
esp_partition_t::size (C++ 成员), 1245
esp_partition_t::subtype (C++ 成员), 1245
esp_partition_t::type (C++ 成员), 1245
ESP_PARTITION_TYPE_APP (C++ 枚举子), 1246
ESP_PARTITION_TYPE_DATA (C++ 枚举子), 1246
esp_partition_type_t (C++ 类型), 1246
esp_partition_verify (C++ 函数), 1241
esp_partition_write (C++ 函数), 1242
ESP_PD_DOMAIN_MAX (C++ 枚举子), 1570
ESP_PD_DOMAIN_RTC_FAST_MEM (C++ 枚举子), 1570
ESP_PD_DOMAIN_RTC_PERIPH (C++ 枚举子), 1570
ESP_PD_DOMAIN_RTC_SLOW_MEM (C++ 枚举子), 1570
ESP_PD_DOMAIN_XTAL (C++ 枚举子), 1570
ESP_PD_OPTION_AUTO (C++ 枚举子), 1571
ESP_PD_OPTION_OFF (C++ 枚举子), 1570
ESP_PD_OPTION_ON (C++ 枚举子), 1571
ESP_PM_APB_FREQ_MAX (C++ 枚举子), 1558
esp_pm_config_esp32_t (C++ 类), 1559
esp_pm_config_esp32_t::light_sleep_enable (C++ 成员), 1559
esp_pm_config_esp32_t::max_cpu_freq (C++ 成员), 1559
esp_pm_config_esp32_t::max_freq_mhz (C++ 成员), 1559
esp_pm_config_esp32_t::min_cpu_freq (C++ 成员), 1559
esp_pm_config_esp32_t::min_freq_mhz (C++ 成员), 1559
esp_pm_configure (C++ 函数), 1555
ESP_PM_CPU_FREQ_MAX (C++ 枚举子), 1558
esp_pm_dump_locks (C++ 函数), 1558
esp_pm_lock_acquire (C++ 函数), 1556
esp_pm_lock_create (C++ 函数), 1556
esp_pm_lock_delete (C++ 函数), 1557
esp_pm_lock_handle_t (C++ 类型), 1558
esp_pm_lock_release (C++ 函数), 1557
esp_pm_lock_type_t (C++ 类型), 1558
ESP_PM_NO_LIGHT_SLEEP (C++ 枚举子), 1558
esp_power_level_t (C++ 类型), 162
esp_pthread_cfg_t (C++ 类), 1591
esp_pthread_cfg_t::inherit_cfg (C++ 成员), 1591
esp_pthread_cfg_t::pin_to_core (C++ 成员), 1591
esp_pthread_cfg_t::prio (C++ 成员), 1591
esp_pthread_cfg_t::stack_size (C++ 成员), 1591
esp_pthread_cfg_t::thread_name (C++ 成员), 1591
esp_pthread_get_cfg (C++ 函数), 1591
esp_pthread_get_default_config (C++ 函数), 1590
esp_pthread_set_cfg (C++ 函数), 1590
ESP_PWR_LVL_N0 (C++ 枚举子), 162
ESP_PWR_LVL_N11 (C++ 枚举子), 162
ESP_PWR_LVL_N12 (C++ 枚举子), 162
ESP_PWR_LVL_N14 (C++ 枚举子), 162
ESP_PWR_LVL_N2 (C++ 枚举子), 163
ESP_PWR_LVL_N3 (C++ 枚举子), 162
ESP_PWR_LVL_N5 (C++ 枚举子), 162
ESP_PWR_LVL_N6 (C++ 枚举子), 162
ESP_PWR_LVL_N8 (C++ 枚举子), 162
ESP_PWR_LVL_N9 (C++ 枚举子), 162
ESP_PWR_LVL_P1 (C++ 枚举子), 163
ESP_PWR_LVL_P3 (C++ 枚举子), 162
ESP_PWR_LVL_P4 (C++ 枚举子), 163
ESP_PWR_LVL_P6 (C++ 枚举子), 162
ESP_PWR_LVL_P7 (C++ 枚举子), 163
ESP_PWR_LVL_P9 (C++ 枚举子), 162
esp_random (C++ 函数), 1599
esp_read_mac (C++ 函数), 1600
esp_register_freertos_idle_hook (C++ 函数),

1459
esp_register_freertos_idle_hook_for_cpu (C++ 函数), 1459
esp_register_freertos_tick_hook (C++ 函数), 1460
esp_register_freertos_tick_hook_for_cpu (C++ 函数), 1460
esp_register_shutdown_handler (C++ 函数), 1598
esp_reset_reason (C++ 函数), 1598
esp_reset_reason_t (C++ 类型), 1602
esp_restart (C++ 函数), 1598
ESP_RST_BROWNOUT (C++ 枚举子), 1603
ESP_RST_DEEPSLEEP (C++ 枚举子), 1603
ESP_RST_EXT (C++ 枚举子), 1602
ESP_RST_INT_WDT (C++ 枚举子), 1603
ESP_RST_PANIC (C++ 枚举子), 1602
ESP_RST_POWERON (C++ 枚举子), 1602
ESP_RST_SDIO (C++ 枚举子), 1603
ESP_RST_SW (C++ 枚举子), 1602
ESP_RST_TASK_WDT (C++ 枚举子), 1603
ESP_RST_UNKNOWN (C++ 枚举子), 1602
ESP_RST_WDT (C++ 枚举子), 1603
ESP_SCO_DATA_PATH_HCI (C++ 枚举子), 163
ESP_SCO_DATA_PATH_PCM (C++ 枚举子), 163
esp_sco_data_path_t (C++ 类型), 163
esp_service_source_t (C++ 类型), 218
esp_set_deep_sleep_wake_stub (C++ 函数), 1569
esp_sleep_disable_wakeup_source (C++ 函数), 1564
esp_sleep_enable_ext0_wakeup (C++ 函数), 1566
esp_sleep_enable_ext1_wakeup (C++ 函数), 1566
esp_sleep_enable_gpio_wakeup (C++ 函数), 1567
esp_sleep_enable_timer_wakeup (C++ 函数), 1565
esp_sleep_enable_touchpad_wakeup (C++ 函数), 1565
esp_sleep_enable_uart_wakeup (C++ 函数), 1567
esp_sleep_enable_ulp_wakeup (C++ 函数), 1564
esp_sleep_ext1_wakeup_mode_t (C++ 类型), 1570
esp_sleep_get_ext1_wakeup_status (C++ 函数), 1567
esp_sleep_get_touchpad_wakeup_status (C++ 函数), 1565
esp_sleep_get_wakeup_cause (C++ 函数), 1569
esp_sleep_pd_config (C++ 函数), 1568
esp_sleep_pd_domain_t (C++ 类型), 1570
esp_sleep_pd_option_t (C++ 类型), 1570
esp_sleep_source_t (C++ 类型), 1571
ESP_SLEEP_WAKEUP_ALL (C++ 枚举子), 1571
esp_sleep_wakeup_cause_t (C++ 类型), 1570
ESP_SLEEP_WAKEUP_EXT0 (C++ 枚举子), 1571
ESP_SLEEP_WAKEUP_EXT1 (C++ 枚举子), 1571
ESP_SLEEP_WAKEUP_GPIO (C++ 枚举子), 1571
ESP_SLEEP_WAKEUP_TIMER (C++ 枚举子), 1571
ESP_SLEEP_WAKEUP_TOUCHPAD (C++ 枚举子), 1571
ESP_SLEEP_WAKEUP_UART (C++ 枚举子), 1571
ESP_SLEEP_WAKEUP_ULP (C++ 枚举子), 1571
ESP_SLEEP_WAKEUP_UNDEFINED (C++ 枚举子), 1571
esp_smartconfig_fast_mode (C++ 函数), 686
esp_smartconfig_get_version (C++ 函数), 685
esp_smartconfig_set_type (C++ 函数), 686
esp_smartconfig_start (C++ 函数), 685
esp_smartconfig_stop (C++ 函数), 685
esp_spiffs_format (C++ 函数), 1315
esp_spiffs_info (C++ 函数), 1316
esp_spiffs_mounted (C++ 函数), 1315
ESP_SPP_BUSY (C++ 枚举子), 318
esp_spp_cb_event_t (C++ 类型), 319
esp_spp_cb_param_t (C++ 类型), 313
esp_spp_cb_param_t::cl_init (C++ 成员), 313
esp_spp_cb_param_t::close (C++ 成员), 313
esp_spp_cb_param_t::cong (C++ 成员), 313
esp_spp_cb_param_t::data_ind (C++ 成员), 313
esp_spp_cb_param_t::disc_comp (C++ 成员), 313
esp_spp_cb_param_t::init (C++ 成员), 313
esp_spp_cb_param_t::open (C++ 成员), 313
esp_spp_cb_param_t::spp_cl_init_evt_param (C++ 类), 313
esp_spp_cb_param_t::spp_cl_init_evt_param::handle (C++ 成员), 314
esp_spp_cb_param_t::spp_cl_init_evt_param::sec_id (C++ 成员), 314
esp_spp_cb_param_t::spp_cl_init_evt_param::status

(C++ 成员), 314
esp_spp_cb_param_t::spp_cl_init_evt_param::use_co (C++ 成员), 314
esp_spp_cb_param_t::spp_close_evt_param (C++ 类), 314
esp_spp_cb_param_t::spp_close_evt_param::async (C++ 成员), 314
esp_spp_cb_param_t::spp_close_evt_param::handle (C++ 成员), 314
esp_spp_cb_param_t::spp_close_evt_param::port_sta (C++ 成员), 314
esp_spp_cb_param_t::spp_close_evt_param::status (C++ 成员), 314
esp_spp_cb_param_t::spp_cong_evt_param (C++ 类), 314
esp_spp_cb_param_t::spp_cong_evt_param::cong (C++ 成员), 314
esp_spp_cb_param_t::spp_cong_evt_param::handle (C++ 成员), 314
esp_spp_cb_param_t::spp_cong_evt_param::status (C++ 成员), 314
esp_spp_cb_param_t::spp_data_ind_evt_param (C++ 类), 314
esp_spp_cb_param_t::spp_data_ind_evt_param::data (C++ 成员), 315
esp_spp_cb_param_t::spp_data_ind_evt_param::handle (C++ 成员), 315
esp_spp_cb_param_t::spp_data_ind_evt_param::len (C++ 成员), 315
esp_spp_cb_param_t::spp_data_ind_evt_param::status (C++ 成员), 315
esp_spp_cb_param_t::spp_discovery_comp_evt_param (C++ 类), 315
esp_spp_cb_param_t::spp_discovery_comp_evt_param::scn (C++ 成员), 315
esp_spp_cb_param_t::spp_discovery_comp_evt_param::service_name (C++ 成员), 315
esp_spp_cb_param_t::spp_discovery_comp_evt_param::status (C++ 成员), 315
esp_spp_cb_param_t::spp_init_evt_param (C++ 类), 315
esp_spp_cb_param_t::spp_init_evt_param::status (C++ 成员), 315
esp_spp_cb_param_t::spp_open_evt_param (C++ 类), 315
esp_spp_cb_param_t::spp_open_evt_param::fd (C++ 成员), 316
esp_spp_cb_param_t::spp_open_evt_param::handle (C++ 成员), 315
esp_spp_cb_param_t::spp_open_evt_param::rem_bda (C++ 成员), 316
esp_spp_cb_param_t::spp_open_evt_param::status (C++ 成员), 315
esp_spp_cb_param_t::spp_srv_open_evt_param (C++ 类), 316
esp_spp_cb_param_t::spp_srv_open_evt_param::fd (C++ 成员), 316
esp_spp_cb_param_t::spp_srv_open_evt_param::handle (C++ 成员), 316
esp_spp_cb_param_t::spp_srv_open_evt_param::new_listen_han (C++ 成员), 316
esp_spp_cb_param_t::spp_srv_open_evt_param::rem_bda (C++ 成员), 316
esp_spp_cb_param_t::spp_srv_open_evt_param::status (C++ 成员), 316
esp_spp_cb_param_t::spp_srv_stop_evt_param (C++ 类), 316
esp_spp_cb_param_t::spp_srv_stop_evt_param::scn (C++ 成员), 316
esp_spp_cb_param_t::spp_srv_stop_evt_param::status (C++ 成员), 316
esp_spp_cb_param_t::spp_start_evt_param (C++ 类), 316
esp_spp_cb_param_t::spp_start_evt_param::handle (C++ 成员), 316
esp_spp_cb_param_t::spp_start_evt_param::scn (C++ 成员), 317
esp_spp_cb_param_t::spp_start_evt_param::sec_id (C++ 成员), 317
esp_spp_cb_param_t::spp_start_evt_param::status (C++ 成员), 316
esp_spp_cb_param_t::spp_start_evt_param::use_co

(C++ 成员), 317
esp_spp_cb_param_t::spp_uninit_evt_param (C++ 类), 317
esp_spp_cb_param_t::spp_uninit_evt_param::status (C++ 成员), 317
esp_spp_cb_param_t::spp_write_evt_param (C++ 类), 317
esp_spp_cb_param_t::spp_write_evt_param::cong (C++ 成员), 317
esp_spp_cb_param_t::spp_write_evt_param::handle (C++ 成员), 317
esp_spp_cb_param_t::spp_write_evt_param::len (C++ 成员), 317
esp_spp_cb_param_t::spp_write_evt_param::status (C++ 成员), 317
esp_spp_cb_param_t::srv_open (C++ 成员), 313
esp_spp_cb_param_t::srv_stop (C++ 成员), 313
esp_spp_cb_param_t::start (C++ 成员), 313
esp_spp_cb_param_t::uninit (C++ 成员), 313
esp_spp_cb_param_t::write (C++ 成员), 313
ESP_SPP_CL_INIT_EVT (C++ 枚举子), 320
ESP_SPP_CLOSE_EVT (C++ 枚举子), 319
ESP_SPP_CONG_EVT (C++ 枚举子), 320
esp_spp_connect (C++ 函数), 310
ESP_SPP_DATA_IND_EVT (C++ 枚举子), 320
esp_spp_deinit (C++ 函数), 310
esp_spp_disconnect (C++ 函数), 311
ESP_SPP_DISCOVERY_COMP_EVT (C++ 枚举子), 319
ESP_SPP_FAILURE (C++ 枚举子), 318
esp_spp_init (C++ 函数), 310
ESP_SPP_INIT_EVT (C++ 枚举子), 319
ESP_SPP_MAX_MTU (C 宏), 318
ESP_SPP_MAX_SCN (C 宏), 318
ESP_SPP_MODE_CB (C++ 枚举子), 319
esp_spp_mode_t (C++ 类型), 319
ESP_SPP_MODE_VFS (C++ 枚举子), 319
ESP_SPP_NEED_DEINIT (C++ 枚举子), 319
ESP_SPP_NEED_INIT (C++ 枚举子), 319
ESP_SPP_NO_CONNECTION (C++ 枚举子), 319
ESP_SPP_NO_DATA (C++ 枚举子), 318
ESP_SPP_NO_RESOURCE (C++ 枚举子), 319
ESP_SPP_NO_SERVER (C++ 枚举子), 319
ESP_SPP_OPEN_EVT (C++ 枚举子), 319
esp_spp_register_callback (C++ 函数), 309
ESP_SPP_ROLE_MASTER (C++ 枚举子), 319
ESP_SPP_ROLE_SLAVE (C++ 枚举子), 319
esp_spp_role_t (C++ 类型), 319
ESP_SPP_SEC_AUTHENTICATE (C 宏), 317
ESP_SPP_SEC_AUTHORIZE (C 宏), 317
ESP_SPP_SEC_ENCRYPT (C 宏), 318
ESP_SPP_SEC_IN_16_DIGITS (C 宏), 318
ESP_SPP_SEC_MITM (C 宏), 318
ESP_SPP_SEC_MODE4_LEVEL4 (C 宏), 318
ESP_SPP_SEC_NONE (C 宏), 317
esp_spp_sec_t (C++ 类型), 318
ESP_SPP_SRV_OPEN_EVT (C++ 枚举子), 320
ESP_SPP_SRV_STOP_EVT (C++ 枚举子), 320
esp_spp_start_discovery (C++ 函数), 310
ESP_SPP_START_EVT (C++ 枚举子), 320
esp_spp_start_srv (C++ 函数), 311
esp_spp_status_t (C++ 类型), 318
esp_spp_stop_srv (C++ 函数), 311
esp_spp_stop_srv_scn (C++ 函数), 312
ESP_SPP_SUCCESS (C++ 枚举子), 318
ESP_SPP_UNINIT_EVT (C++ 枚举子), 319
esp_spp_vfs_register (C++ 函数), 312
esp_spp_write (C++ 函数), 312
ESP_SPP_WRITE_EVT (C++ 枚举子), 320
esp_task_wdt_add (C++ 函数), 1502
esp_task_wdt_deinit (C++ 函数), 1501
esp_task_wdt_delete (C++ 函数), 1503
esp_task_wdt_feed (C++ 函数), 1503
esp_task_wdt_init (C++ 函数), 1501
esp_task_wdt_reset (C++ 函数), 1502
esp_task_wdt_status (C++ 函数), 1503
esp_timer_cb_t (C++ 类型), 1526
esp_timer_create (C++ 函数), 1523
esp_timer_create_args_t (C++ 类), 1525
esp_timer_create_args_t::arg (C++ 成员), 1526
esp_timer_create_args_t::callback (C++ 成员), 1526
esp_timer_create_args_t::dispatch_method (C++ 成员), 1526

esp_timer_create_args_t::name (C++ 成员), 1526
esp_timer_deinit (C++ 函数), 1522
esp_timer_delete (C++ 函数), 1524
esp_timer_dispatch_t (C++ 类型), 1526
esp_timer_dump (C++ 函数), 1525
esp_timer_get_next_alarm (C++ 函数), 1525
esp_timer_get_time (C++ 函数), 1524
esp_timer_handle_t (C++ 类型), 1526
esp_timer_init (C++ 函数), 1522
esp_timer_start_once (C++ 函数), 1523
esp_timer_start_periodic (C++ 函数), 1523
esp_timer_stop (C++ 函数), 1524
ESP_TIMER_TASK (C++ 枚举子), 1526
esp_tls (C++ 类), 1103
esp_tls::cacert (C++ 成员), 1104
esp_tls::cacert_ptr (C++ 成员), 1104
esp_tls::clientcert (C++ 成员), 1104
esp_tls::clientkey (C++ 成员), 1104
esp_tls::conf (C++ 成员), 1103
esp_tls::conn_state (C++ 成员), 1104
esp_tls::ctr_drbg (C++ 成员), 1103
esp_tls::entropy (C++ 成员), 1103
esp_tls::is_tls (C++ 成员), 1104
esp_tls::read (C++ 成员), 1104
esp_tls::rset (C++ 成员), 1104
esp_tls::server_fd (C++ 成员), 1104
esp_tls::sockfd (C++ 成员), 1104
esp_tls::ssl (C++ 成员), 1103
esp_tls::write (C++ 成员), 1104
esp_tls::wset (C++ 成员), 1104
esp_tls_cfg (C++ 类), 1102
esp_tls_cfg::alpn_protos (C++ 成员), 1102
esp_tls_cfg::cacert_pem_buf (C++ 成员), 1102
esp_tls_cfg::cacert_pem_bytes (C++ 成员), 1102
esp_tls_cfg::clientcert_pem_buf (C++ 成员), 1102
esp_tls_cfg::clientcert_pem_bytes (C++ 成员), 1102
esp_tls_cfg::clientkey_password (C++ 成员), 1103
esp_tls_cfg::clientkey_password_len (C++ 成员), 1103
esp_tls_cfg::clientkey_pem_buf (C++ 成员), 1103
esp_tls_cfg::clientkey_pem_bytes (C++ 成员), 1103
esp_tls_cfg::common_name (C++ 成员), 1103
esp_tls_cfg::keep_alive_cfg (C++ 成员), 1103
esp_tls_cfg::non_block (C++ 成员), 1103
esp_tls_cfg::skip_common_name (C++ 成员), 1103
esp_tls_cfg::timeout_ms (C++ 成员), 1103
esp_tls_cfg::use_global_ca_store (C++ 成员), 1103
esp_tls_cfg_t (C++ 类型), 1104
esp_tls_conn_delete (C++ 函数), 1100
esp_tls_conn_http_new (C++ 函数), 1098
esp_tls_conn_http_new_async (C++ 函数), 1099
esp_tls_conn_new (C++ 函数), 1098
esp_tls_conn_new_async (C++ 函数), 1098
esp_tls_conn_read (C++ 函数), 1100
esp_tls_conn_state (C++ 类型), 1105
esp_tls_conn_state_t (C++ 类型), 1104
esp_tls_conn_write (C++ 函数), 1099
ESP_TLS_CONNECTING (C++ 枚举子), 1105
ESP_TLS_DONE (C++ 枚举子), 1105
ESP_TLS_FAIL (C++ 枚举子), 1105
esp_tls_free_global_ca_store (C++ 函数), 1101
esp_tls_get_bytes_avail (C++ 函数), 1100
esp_tls_get_global_ca_store (C++ 函数), 1101
ESP_TLS_HANDSHAKE (C++ 枚举子), 1105
ESP_TLS_INIT (C++ 枚举子), 1105
esp_tls_init_global_ca_store (C++ 函数), 1100
esp_tls_set_global_ca_store (C++ 函数), 1101
esp_tls_t (C++ 类型), 1104
ESP_UUID_LEN_128 (C 宏), 164
ESP_UUID_LEN_16 (C 宏), 164
ESP_UUID_LEN_32 (C 宏), 164
esp_vendor_ie_cb_t (C++ 类型), 664
esp_vfs_close (C++ 函数), 1294
esp_vfs_dev_uart_port_set_rx_line_endings (C++ 函数), 1300

esp_vfs_dev_uart_port_set_tx_line_endings (C++ 函数), 1300
esp_vfs_dev_uart_register (C++ 函数), 1299
esp_vfs_dev_uart_set_rx_line_endings (C++ 函数), 1299
esp_vfs_dev_uart_set_tx_line_endings (C++ 函数), 1299
esp_vfs_dev_uart_use_driver (C++ 函数), 1301
esp_vfs_dev_uart_use_nonblocking (C++ 函数), 1301
esp_vfs_fat_mount_config_t (C++ 类), 1304, 1309
esp_vfs_fat_mount_config_t::allocation_unit_size (C++ 成员), 1305, 1310
esp_vfs_fat_mount_config_t::format_if_mount_failed (C++ 成员), 1304, 1310
esp_vfs_fat_mount_config_t::max_files (C++ 成员), 1304, 1310
esp_vfs_fat_rawflash_mount (C++ 函数), 1305
esp_vfs_fat_rawflash_unmount (C++ 函数), 1306
esp_vfs_fat_register (C++ 函数), 1302
esp_vfs_fat_sdmmc_mount (C++ 函数), 1303
esp_vfs_fat_sdmmc_unmount (C++ 函数), 1305
esp_vfs_fat_spiflash_mount (C++ 函数), 1309
esp_vfs_fat_spiflash_unmount (C++ 函数), 1310
esp_vfs_fat_unregister_path (C++ 函数), 1303
ESP_VFS_FLAG_CONTEXT_PTR (C 宏), 1299
ESP_VFS_FLAG_DEFAULT (C 宏), 1299
esp_vfs_fstat (C++ 函数), 1294
esp_vfs_id_t (C++ 类型), 1299
esp_vfs_link (C++ 函数), 1294
esp_vfs_lseek (C++ 函数), 1294
esp_vfs_open (C++ 函数), 1294
ESP_VFS_PATH_MAX (C 宏), 1299
esp_vfs_poll (C++ 函数), 1297
esp_vfs_read (C++ 函数), 1294
esp_vfs_register (C++ 函数), 1294
esp_vfs_register_fd (C++ 函数), 1296
esp_vfs_register_fd_range (C++ 函数), 1295
esp_vfs_register_with_id (C++ 函数), 1295
esp_vfs_rename (C++ 函数), 1294
esp_vfs_select (C++ 函数), 1296
esp_vfs_select_triggered (C++ 函数), 1297
esp_vfs_select_triggered_isr (C++ 函数), 1297
esp_vfs_spiffs_conf_t (C++ 类), 1316
esp_vfs_spiffs_conf_t::base_path (C++ 成员), 1316
esp_vfs_spiffs_conf_t::format_if_mount_failed (C++ 成员), 1316
esp_vfs_spiffs_conf_t::max_files (C++ 成员), 1316
esp_vfs_spiffs_conf_t::partition_label (C++ 成员), 1316
esp_vfs_spiffs_register (C++ 函数), 1315
esp_vfs_spiffs_unregister (C++ 函数), 1315
esp_vfs_stat (C++ 函数), 1294
esp_vfs_t (C++ 类), 1298
esp_vfs_t::end_select (C++ 成员), 1298
esp_vfs_t::flags (C++ 成员), 1298
esp_vfs_t::get_socket_select_semaphore (C++ 成员), 1298
esp_vfs_t::socket_select (C++ 成员), 1298
esp_vfs_t::start_select (C++ 成员), 1298
esp_vfs_t::stop_socket_select (C++ 成员), 1298
esp_vfs_t::stop_socket_select_isr (C++ 成员), 1298
esp_vfs_unlink (C++ 函数), 1294
esp_vfs_unregister (C++ 函数), 1295
esp_vfs_unregister_fd (C++ 函数), 1296
esp_vfs_utime (C++ 函数), 1294
esp_vfs_write (C++ 函数), 1294
esp_vhci_host_callback (C++ 类), 160
esp_vhci_host_callback::notify_host_recv (C++ 成员), 160
esp_vhci_host_callback::notify_host_send_available (C++ 成员), 160
esp_vhci_host_callback_t (C++ 类型), 160
esp_vhci_host_check_send_available (C++ 函数), 156
esp_vhci_host_register_callback (C++ 函数), 156
esp_vhci_host_send_packet (C++ 函数), 156
esp_wake_deep_sleep (C++ 函数), 1569

esp_websocket_client_config_t (C++ 类), 1182
esp_websocket_client_config_t::buffer_size (C++ 成员), 1182
esp_websocket_client_config_t::cert_pem (C++ 成员), 1182
esp_websocket_client_config_t::disable_auto_reconnect (C++ 成员), 1182
esp_websocket_client_config_t::headers (C++ 成员), 1183
esp_websocket_client_config_t::host (C++ 成员), 1182
esp_websocket_client_config_t::keep_alive_count (C++ 成员), 1183
esp_websocket_client_config_t::keep_alive_enable (C++ 成员), 1183
esp_websocket_client_config_t::keep_alive_idle (C++ 成员), 1183
esp_websocket_client_config_t::keep_alive_interval (C++ 成员), 1183
esp_websocket_client_config_t::password (C++ 成员), 1182
esp_websocket_client_config_t::path (C++ 成员), 1182
esp_websocket_client_config_t::pingpong_timeout_sec (C++ 成员), 1183
esp_websocket_client_config_t::port (C++ 成员), 1182
esp_websocket_client_config_t::subprotocol (C++ 成员), 1182
esp_websocket_client_config_t::task_prio (C++ 成员), 1182
esp_websocket_client_config_t::task_stack (C++ 成员), 1182
esp_websocket_client_config_t::transport (C++ 成员), 1182
esp_websocket_client_config_t::uri (C++ 成员), 1182
esp_websocket_client_config_t::user_agent (C++ 成员), 1183
esp_websocket_client_config_t::user_context (C++ 成员), 1182
esp_websocket_client_config_t::username (C++ 成员), 1182
esp_websocket_client_destroy (C++ 函数), 1179
esp_websocket_client_handle_t (C++ 类型), 1183
esp_websocket_client_init (C++ 函数), 1178
esp_websocket_client_is_connected (C++ 函数), 1180
esp_websocket_client_send (C++ 函数), 1179
esp_websocket_client_send_bin (C++ 函数), 1180
esp_websocket_client_send_text (C++ 函数), 1180
esp_websocket_client_set_uri (C++ 函数), 1178
esp_websocket_client_start (C++ 函数), 1179
esp_websocket_client_stop (C++ 函数), 1179
esp_websocket_event_data_t (C++ 类), 1181
esp_websocket_event_data_t::client (C++ 成员), 1181
esp_websocket_event_data_t::data_len (C++ 成员), 1181
esp_websocket_event_data_t::data_ptr (C++ 成员), 1181
esp_websocket_event_data_t::op_code (C++ 成员), 1181
esp_websocket_event_data_t::payload_len (C++ 成员), 1181
esp_websocket_event_data_t::payload_offset (C++ 成员), 1182
esp_websocket_event_data_t::user_context (C++ 成员), 1181
esp_websocket_event_id_t (C++ 类型), 1183
esp_websocket_register_events (C++ 函数), 1181
esp_websocket_transport_t (C++ 类型), 1184
esp_wifi_80211_tx (C++ 函数), 657
esp_wifi_ap_get_sta_aid (C++ 函数), 653
esp_wifi_ap_get_sta_list (C++ 函数), 652
esp_wifi_clear_fast_connect (C++ 函数), 642
esp_wifi_connect (C++ 函数), 642
esp_wifi_deauth_sta (C++ 函数), 643
esp_wifi_deinit (C++ 函数), 640
esp_wifi_disconnect (C++ 函数), 642

esp_wifi_get_ant (C++ 函数), 659
esp_wifi_get_ant_gpio (C++ 函数), 658
esp_wifi_get_auto_connect (C++ 函数), 654
esp_wifi_get_bandwidth (C++ 函数), 646
esp_wifi_get_channel (C++ 函数), 647
esp_wifi_get_config (C++ 函数), 652
esp_wifi_get_country (C++ 函数), 648
esp_wifi_get_event_mask (C++ 函数), 656
esp_wifi_get_inactive_time (C++ 函数), 660
esp_wifi_get_mac (C++ 函数), 649
esp_wifi_get_max_tx_power (C++ 函数), 656
esp_wifi_get_mode (C++ 函数), 640
esp_wifi_get_promiscuous (C++ 函数), 650
esp_wifi_get_promiscuous_ctrl_filter (C++ 函数), 651
esp_wifi_get_promiscuous_filter (C++ 函数), 651
esp_wifi_get_protocol (C++ 函数), 646
esp_wifi_get_ps (C++ 函数), 645
esp_wifi_init (C++ 函数), 639
ESP_WIFI_MAX_CONN_NUM (C 宏), 675
esp_wifi_restore (C++ 函数), 641
esp_wifi_scan_get_ap_num (C++ 函数), 644
esp_wifi_scan_get_ap_records (C++ 函数), 644
esp_wifi_scan_start (C++ 函数), 643
esp_wifi_scan_stop (C++ 函数), 643
esp_wifi_set_ant (C++ 函数), 659
esp_wifi_set_ant_gpio (C++ 函数), 658
esp_wifi_set_auto_connect (C++ 函数), 654
esp_wifi_set_bandwidth (C++ 函数), 646
esp_wifi_set_channel (C++ 函数), 647
esp_wifi_set_config (C++ 函数), 652
esp_wifi_set_country (C++ 函数), 648
esp_wifi_set_csi (C++ 函数), 658
esp_wifi_set_csi_config (C++ 函数), 658
esp_wifi_set_csi_rx_cb (C++ 函数), 657
esp_wifi_set_event_mask (C++ 函数), 656
esp_wifi_set_inactive_time (C++ 函数), 659
esp_wifi_set_mac (C++ 函数), 649
esp_wifi_set_max_tx_power (C++ 函数), 655
esp_wifi_set_mode (C++ 函数), 640
esp_wifi_set_promiscuous (C++ 函数), 650
esp_wifi_set_promiscuous_ctrl_filter (C++ 函数), 651
esp_wifi_set_promiscuous_filter (C++ 函数), 650
esp_wifi_set_promiscuous_rx_cb (C++ 函数), 650
esp_wifi_set_protocol (C++ 函数), 645
esp_wifi_set_ps (C++ 函数), 645
esp_wifi_set_storage (C++ 函数), 653
esp_wifi_set_vendor_ie (C++ 函数), 654
esp_wifi_set_vendor_ie_cb (C++ 函数), 655
esp_wifi_sta_get_ap_info (C++ 函数), 644
esp_wifi_start (C++ 函数), 641
esp_wifi_statis_dump (C++ 函数), 660
esp_wifi_stop (C++ 函数), 641
eStandardSleep (C++ 枚举子), 1355
eSuspended (C++ 枚举子), 1354
eTaskGetState (C++ 函数), 1331
eTaskState (C++ 类型), 1354
ETH_CLOCK_GPIO0_IN (C++ 枚举子), 749
ETH_CLOCK_GPIO0_OUT (C++ 枚举子), 749
ETH_CLOCK_GPIO16_OUT (C++ 枚举子), 750
ETH_CLOCK_GPIO17_OUT (C++ 枚举子), 750
eth_clock_mode_t (C++ 类型), 749
eth_config_t (C++ 类), 748
eth_config_t::clock_mode (C++ 成员), 748
eth_config_t::flow_ctrl_enable (C++ 成员), 748
eth_config_t::gpio_config (C++ 成员), 748
eth_config_t::mac_mode (C++ 成员), 748
eth_config_t::phy_addr (C++ 成员), 748
eth_config_t::phy_check_init (C++ 成员), 748
eth_config_t::phy_check_link (C++ 成员), 748
eth_config_t::phy_get_duplex_mode (C++ 成员), 748
eth_config_t::phy_get_partner_pause_enable (C++ 成员), 748
eth_config_t::phy_get_speed_mode (C++ 成员), 748
eth_config_t::phy_init (C++ 成员), 748
eth_config_t::phy_power_enable (C++ 成员), 748

eth_config_t::promiscuous_enable (C++ 成员), 749
eth_config_t::reset_timeout_ms (C++ 成员), 749
eth_config_t::tcpip_input (C++ 成员), 748
eth_duplex_mode_t (C++ 类型), 750
eth_gpio_config_func (C++ 类型), 749
ETH_MODE_FULLDUPLEX (C++ 枚举子), 750
ETH_MODE_HALFDUPLEX (C++ 枚举子), 750
ETH_MODE_MII (C++ 枚举子), 749
ETH_MODE_RMII (C++ 枚举子), 749
eth_mode_t (C++ 类型), 749
eth_phy_base_t (C++ 类型), 750
eth_phy_check_init_func (C++ 类型), 749
eth_phy_check_link_func (C++ 类型), 749
eth_phy_func (C++ 类型), 749
eth_phy_get_duplex_mode_func (C++ 类型), 749
eth_phy_get_partner_pause_enable_func (C++ 类型), 749
eth_phy_get_speed_mode_func (C++ 类型), 749
eth_phy_power_enable_func (C++ 类型), 749
ETH_SPEED_MODE_100M (C++ 枚举子), 750
ETH_SPEED_MODE_10M (C++ 枚举子), 750
eth_speed_mode_t (C++ 类型), 750
eth_tcpip_input_func (C++ 类型), 749
ETS_INTERNAL_INTR_SOURCE_OFF (C 宏), 1499
ETS_INTERNAL_PROFILING_INTR_SOURCE (C 宏), 1499
ETS_INTERNAL_SW0_INTR_SOURCE (C 宏), 1498
ETS_INTERNAL_SW1_INTR_SOURCE (C 宏), 1498
ETS_INTERNAL_TIMER0_INTR_SOURCE (C 宏), 1498
ETS_INTERNAL_TIMER1_INTR_SOURCE (C 宏), 1498
ETS_INTERNAL_TIMER2_INTR_SOURCE (C 宏), 1498
EventBits_t (C++ 类型), 1441
EventGroupHandle_t (C++ 类型), 1441

F

FAST_PROV_ACT_ENTER (C++ 枚举子), 412
FAST_PROV_ACT_EXIT (C++ 枚举子), 412
FAST_PROV_ACT_MAX (C++ 枚举子), 412
FAST_PROV_ACT_NONE (C++ 枚举子), 412
FAST_PROV_ACT_SUSPEND (C++ 枚举子), 412
ff_diskio_impl_t (C++ 类), 1306
ff_diskio_impl_t::init (C++ 成员), 1307
ff_diskio_impl_t::ioctl (C++ 成员), 1307
ff_diskio_impl_t::read (C++ 成员), 1307
ff_diskio_impl_t::status (C++ 成员), 1307
ff_diskio_impl_t::write (C++ 成员), 1307
ff_diskio_register (C++ 函数), 1306
ff_diskio_register_sdmmc (C++ 函数), 1307
filter_cb_t (C++ 类型), 1049

G

gpio_config (C++ 函数), 817
gpio_config_t (C++ 类), 826
gpio_config_t::intr_type (C++ 成员), 826
gpio_config_t::mode (C++ 成员), 826
gpio_config_t::pin_bit_mask (C++ 成员), 826
gpio_config_t::pull_down_en (C++ 成员), 826
gpio_config_t::pull_up_en (C++ 成员), 826
gpio_deep_sleep_hold_dis (C++ 函数), 825
gpio_deep_sleep_hold_en (C++ 函数), 825
GPIO_DRIVE_CAP_0 (C++ 枚举子), 829
GPIO_DRIVE_CAP_1 (C++ 枚举子), 829
GPIO_DRIVE_CAP_2 (C++ 枚举子), 829
GPIO_DRIVE_CAP_3 (C++ 枚举子), 829
GPIO_DRIVE_CAP_DEFAULT (C++ 枚举子), 829
GPIO_DRIVE_CAP_MAX (C++ 枚举子), 829
gpio_drive_cap_t (C++ 类型), 828
GPIO_FLOATING (C++ 枚举子), 828
gpio_get_drive_capability (C++ 函数), 824
gpio_get_level (C++ 函数), 819
gpio_hold_dis (C++ 函数), 824
gpio_hold_en (C++ 函数), 824
gpio_install_isr_service (C++ 函数), 822
gpio_int_type_t (C++ 类型), 827
GPIO_INTR_ANYEDGE (C++ 枚举子), 827
gpio_intr_disable (C++ 函数), 818
GPIO_INTR_DISABLE (C++ 枚举子), 827
gpio_intr_enable (C++ 函数), 818
GPIO_INTR_HIGH_LEVEL (C++ 枚举子), 827
GPIO_INTR_LOW_LEVEL (C++ 枚举子), 827
GPIO_INTR_MAX (C++ 枚举子), 827
GPIO_INTR_NEGEDGE (C++ 枚举子), 827

GPIO_INTR_POSEDGE (C++ 枚举子), 827
gpio_iomux_in (C++ 函数), 825
gpio_iomux_out (C++ 函数), 825
GPIO_IS_VALID_GPIO (C 宏), 826
GPIO_IS_VALID_OUTPUT_GPIO (C 宏), 826
gpio_isr_handle_t (C++ 类型), 827
gpio_isr_handler_add (C++ 函数), 823
gpio_isr_handler_remove (C++ 函数), 823
gpio_isr_register (C++ 函数), 821
gpio_isr_t (C++ 类型), 827
GPIO_MODE_DISABLE (C++ 枚举子), 827
GPIO_MODE_INPUT (C++ 枚举子), 828
GPIO_MODE_INPUT_OUTPUT (C++ 枚举子), 828
GPIO_MODE_INPUT_OUTPUT_OD (C++ 枚举子), 828
GPIO_MODE_OUTPUT (C++ 枚举子), 828
GPIO_MODE_OUTPUT_OD (C++ 枚举子), 828
gpio_mode_t (C++ 类型), 827
GPIO_NUM_0 (C++ 枚举子), 827
GPIO_NUM_1 (C++ 枚举子), 827
GPIO_NUM_2 (C++ 枚举子), 827
gpio_num_t (C++ 类型), 827
gpio_pull_mode_t (C++ 类型), 828
gpio_pulldown_dis (C++ 函数), 822
GPIO_PULLDOWN_DISABLE (C++ 枚举子), 828
gpio_pulldown_en (C++ 函数), 822
GPIO_PULLDOWN_ENABLE (C++ 枚举子), 828
GPIO_PULLDOWN_ONLY (C++ 枚举子), 828
gpio_pulldown_t (C++ 类型), 828
gpio_pullup_dis (C++ 函数), 821
GPIO_PULLUP_DISABLE (C++ 枚举子), 828
gpio_pullup_en (C++ 函数), 821
GPIO_PULLUP_ENABLE (C++ 枚举子), 828
GPIO_PULLUP_ONLY (C++ 枚举子), 828
GPIO_PULLUP_PULLDOWN (C++ 枚举子), 828
gpio_pullup_t (C++ 类型), 828
gpio_reset_pin (C++ 函数), 817
GPIO_SEL_0 (C 宏), 826
GPIO_SEL_1 (C 宏), 826
GPIO_SEL_2 (C 宏), 826
gpio_set_direction (C++ 函数), 819
gpio_set_drive_capability (C++ 函数), 823
gpio_set_intr_type (C++ 函数), 818
gpio_set_level (C++ 函数), 819
gpio_set_pull_mode (C++ 函数), 820
gpio_uninstall_isr_service (C++ 函数), 823
gpio_wakeup_disable (C++ 函数), 820
gpio_wakeup_enable (C++ 函数), 820

H

hall_sensor_read (C++ 函数), 782
heap_caps_add_region (C++ 函数), 1471
heap_caps_add_region_with_caps (C++ 函数), 1471
heap_caps_calloc (C++ 函数), 1465
heap_caps_calloc_prefer (C++ 函数), 1469
heap_caps_check_integrity (C++ 函数), 1467
heap_caps_check_integrity_addr (C++ 函数), 1467
heap_caps_check_integrity_all (C++ 函数), 1467
heap_caps_dump (C++ 函数), 1469
heap_caps_dump_all (C++ 函数), 1469
heap_caps_enable_nonos_stack_heaps (C++ 函数), 1471
heap_caps_free (C++ 函数), 1465
heap_caps_get_free_size (C++ 函数), 1465
heap_caps_get_info (C++ 函数), 1466
heap_caps_get_largest_free_block (C++ 函数), 1466
heap_caps_get_minimum_free_size (C++ 函数), 1466
heap_caps_init (C++ 函数), 1471
heap_caps_malloc (C++ 函数), 1464
heap_caps_malloc_extmem_enable (C++ 函数), 1468
heap_caps_malloc_prefer (C++ 函数), 1468
heap_caps_print_heap_info (C++ 函数), 1467
heap_caps_realloc (C++ 函数), 1465
heap_caps_realloc_prefer (C++ 函数), 1468
HEAP_TRACE_ALL (C++ 枚举子), 1487
heap_trace_dump (C++ 函数), 1486
heap_trace_get (C++ 函数), 1486
heap_trace_get_count (C++ 函数), 1486
heap_trace_init_standalone (C++ 函数), 1484

HEAP_TRACE_LEAKS (C++ 枚举子), 1487
heap_trace_mode_t (C++ 类型), 1487
heap_trace_record_t (C++ 类), 1486
heap_trace_record_t::address (C++ 成员), 1486
heap_trace_record_t::alloced_by (C++ 成员), 1487
heap_trace_record_t::ccount (C++ 成员), 1486
heap_trace_record_t::freed_by (C++ 成员), 1487
heap_trace_record_t::size (C++ 成员), 1487
heap_trace_resume (C++ 函数), 1485
heap_trace_start (C++ 函数), 1484
heap_trace_stop (C++ 函数), 1485
HSPI_HOST (C++ 枚举子), 1002
HTTP_AUTH_TYPE_BASIC (C++ 枚举子), 1122
HTTP_AUTH_TYPE_DIGEST (C++ 枚举子), 1122
HTTP_AUTH_TYPE_NONE (C++ 枚举子), 1122
HTTP_EVENT_DISCONNECTED (C++ 枚举子), 1121
HTTP_EVENT_ERROR (C++ 枚举子), 1121
http_event_handle_cb (C++ 类型), 1121
HTTP_EVENT_HEADER_SENT (C++ 枚举子), 1121
HTTP_EVENT_ON_CONNECTED (C++ 枚举子), 1121
HTTP_EVENT_ON_DATA (C++ 枚举子), 1121
HTTP_EVENT_ON_FINISH (C++ 枚举子), 1121
HTTP_EVENT_ON_HEADER (C++ 枚举子), 1121
HTTP_METHOD_DELETE (C++ 枚举子), 1122
HTTP_METHOD_GET (C++ 枚举子), 1121
HTTP_METHOD_HEAD (C++ 枚举子), 1122
HTTP_METHOD_MAX (C++ 枚举子), 1122
HTTP_METHOD_NOTIFY (C++ 枚举子), 1122
HTTP_METHOD_OPTIONS (C++ 枚举子), 1122
HTTP_METHOD_PATCH (C++ 枚举子), 1122
HTTP_METHOD_POST (C++ 枚举子), 1122
HTTP_METHOD_PUT (C++ 枚举子), 1122
HTTP_METHOD_SUBSCRIBE (C++ 枚举子), 1122
HTTP_METHOD_UNSUBSCRIBE (C++ 枚举子), 1122
HTTP_TRANSPORT_OVER_SSL (C++ 枚举子), 1121
HTTP_TRANSPORT_OVER_TCP (C++ 枚举子), 1121
HTTP_TRANSPORT_UNKNOWN (C++ 枚举子), 1121
HTTPD_200 (C 宏), 1150
HTTPD_204 (C 宏), 1150
HTTPD_207 (C 宏), 1150
HTTPD_400 (C 宏), 1150
HTTPD_400_BAD_REQUEST (C++ 枚举子), 1156
HTTPD_404 (C 宏), 1150
HTTPD_404_NOT_FOUND (C++ 枚举子), 1156
HTTPD_405_METHOD_NOT_ALLOWED (C++ 枚举子), 1156
HTTPD_408 (C 宏), 1151
HTTPD_408_REQ_TIMEOUT (C++ 枚举子), 1156
HTTPD_411_LENGTH_REQUIRED (C++ 枚举子), 1156
HTTPD_414_URI_TOO_LONG (C++ 枚举子), 1156
HTTPD_431_REQ_HDR_FIELDS_TOO_LARGE (C++ 枚举子), 1156
HTTPD_500 (C 宏), 1151
HTTPD_500_INTERNAL_SERVER_ERROR (C++ 枚举子), 1155
HTTPD_501_METHOD_NOT_IMPLEMENTED (C++ 枚举子), 1155
HTTPD_505_VERSION_NOT_SUPPORTED (C++ 枚举子), 1156
httpd_close_func_t (C++ 类型), 1154
httpd_config (C++ 类), 1147
httpd_config::backlog_conn (C++ 成员), 1147
httpd_config::close_fn (C++ 成员), 1148
httpd_config::ctrl_port (C++ 成员), 1147
httpd_config::global_transport_ctx (C++ 成员), 1148
httpd_config::global_transport_ctx_free_fn (C++ 成员), 1148
httpd_config::global_user_ctx (C++ 成员), 1147
httpd_config::global_user_ctx_free_fn (C++ 成员), 1148
httpd_config::lru_purge_enable (C++ 成员), 1147
httpd_config::max_open_sockets (C++ 成员), 1147
httpd_config::max_resp_headers (C++ 成员), 1147
httpd_config::max_uri_handlers (C++ 成员), 1147
httpd_config::open_fn (C++ 成员), 1148
httpd_config::recv_wait_timeout (C++ 成员),

1147
httpd_config::send_wait_timeout (C++ 成员), 1147
httpd_config::server_port (C++ 成员), 1147
httpd_config::stack_size (C++ 成员), 1147
httpd_config::task_priority (C++ 成员), 1147
httpd_config::uri_match_fn (C++ 成员), 1148
httpd_config_t (C++ 类型), 1155
HTTPD_DEFAULT_CONFIG (C 宏), 1151
HTTPD_ERR_CODE_MAX (C++ 枚举子), 1156
httpd_err_code_t (C++ 类型), 1155
httpd_err_handler_func_t (C++ 类型), 1153
httpd_free_ctx_fn_t (C++ 类型), 1154
httpd_get_global_transport_ctx (C++ 函数), 1145
httpd_get_global_user_ctx (C++ 函数), 1145
httpd_handle_t (C++ 类型), 1154
HTTPD_MAX_REQ_HDR_LEN (C 宏), 1150
HTTPD_MAX_URI_LEN (C 宏), 1150
httpd_method_t (C++ 类型), 1154
httpd_open_func_t (C++ 类型), 1154
httpd_pending_func_t (C++ 类型), 1153
httpd_query_key_value (C++ 函数), 1133
httpd_queue_work (C++ 函数), 1144
httpd_recv_func_t (C++ 类型), 1152
httpd_register_err_handler (C++ 函数), 1142
httpd_register_uri_handler (C++ 函数), 1127
httpd_req (C++ 类), 1149
httpd_req::aux (C++ 成员), 1149
httpd_req::content_len (C++ 成员), 1149
httpd_req::free_ctx (C++ 成员), 1149
httpd_req::handle (C++ 成员), 1149
httpd_req::ignore_sess_ctx_changes (C++ 成员), 1149
httpd_req::method (C++ 成员), 1149
httpd_req::sess_ctx (C++ 成员), 1149
httpd_req::uri (C++ 成员), 1149
httpd_req::user_ctx (C++ 成员), 1149
httpd_req_get_hdr_value_len (C++ 函数), 1131
httpd_req_get_hdr_value_str (C++ 函数), 1132
httpd_req_get_url_query_len (C++ 函数), 1132
httpd_req_get_url_query_str (C++ 函数), 1133
httpd_req_recv (C++ 函数), 1130
httpd_req_t (C++ 类型), 1152
httpd_req_to_sockfd (C++ 函数), 1130
httpd_resp_send (C++ 函数), 1135
httpd_resp_send_404 (C++ 函数), 1139
httpd_resp_send_408 (C++ 函数), 1140
httpd_resp_send_500 (C++ 函数), 1140
httpd_resp_send_chunk (C++ 函数), 1135
httpd_resp_send_err (C++ 函数), 1139
httpd_resp_sendstr (C++ 函数), 1136
httpd_resp_sendstr_chunk (C++ 函数), 1137
httpd_resp_set_hdr (C++ 函数), 1138
httpd_resp_set_status (C++ 函数), 1137
httpd_resp_set_type (C++ 函数), 1138
HTTPD_RESP_USE_STRLEN (C 宏), 1151
httpd_send (C++ 函数), 1141
httpd_send_func_t (C++ 类型), 1152
httpd_sess_get_ctx (C++ 函数), 1144
httpd_sess_get_transport_ctx (C++ 函数), 1145
httpd_sess_set_ctx (C++ 函数), 1144
httpd_sess_set_pending_override (C++ 函数), 1130
httpd_sess_set_recv_override (C++ 函数), 1129
httpd_sess_set_send_override (C++ 函数), 1129
httpd_sess_set_transport_ctx (C++ 函数), 1145
httpd_sess_trigger_close (C++ 函数), 1146
httpd_sess_update_lru_counter (C++ 函数), 1146
HTTPD_SOCK_ERR_FAIL (C 宏), 1150
HTTPD_SOCK_ERR_INVALID (C 宏), 1150
HTTPD_SOCK_ERR_TIMEOUT (C 宏), 1150
httpd_ssl_config (C++ 类), 1158
httpd_ssl_config::cacert_len (C++ 成员), 1158
httpd_ssl_config::cacert_pem (C++ 成员), 1158
httpd_ssl_config::httpd (C++ 成员), 1158
httpd_ssl_config::port_insecure (C++ 成员), 1158
httpd_ssl_config::port_secure (C++ 成员), 1158
httpd_ssl_config::prvtkey_len (C++ 成员), 1158
httpd_ssl_config::prvtkey_pem (C++ 成员),

1158
httpd_ssl_config::transport_mode (C++ 成员), 1158
HTTPD_SSL_CONFIG_DEFAULT (C 宏), 1158
httpd_ssl_config_t (C++ 类型), 1159
httpd_ssl_start (C++ 函数), 1157
httpd_ssl_stop (C++ 函数), 1157
HTTPD_SSL_TRANSPORT_INSECURE (C++ 枚举子), 1159
httpd_ssl_transport_mode_t (C++ 类型), 1159
HTTPD_SSL_TRANSPORT_SECURE (C++ 枚举子), 1159
httpd_start (C++ 函数), 1142
httpd_stop (C++ 函数), 1143
HTTPD_TYPE_JSON (C 宏), 1151
HTTPD_TYPE_OCTET (C 宏), 1151
HTTPD_TYPE_TEXT (C 宏), 1151
httpd_unregister_uri (C++ 函数), 1128
httpd_unregister_uri_handler (C++ 函数), 1128
httpd_uri (C++ 类), 1150
httpd_uri::handler (C++ 成员), 1150
httpd_uri::method (C++ 成员), 1150
httpd_uri::uri (C++ 成员), 1150
httpd_uri::user_ctx (C++ 成员), 1150
httpd_uri_match_func_t (C++ 类型), 1155
httpd_uri_match_wildcard (C++ 函数), 1134
httpd_uri_t (C++ 类型), 1152
httpd_work_fn_t (C++ 类型), 1155
HttpStatus_Code (C++ 类型), 1122
HttpStatus_Found (C++ 枚举子), 1123
HttpStatus_MovedPermanently (C++ 枚举子), 1123
HttpStatus_MultipleChoices (C++ 枚举子), 1122
HttpStatus_Ok (C++ 枚举子), 1122
HttpStatus_Unauthorized (C++ 枚举子), 1123

I

i2c_ack_type_t (C++ 类型), 854
I2C_ADDR_BIT_10 (C++ 枚举子), 854
I2C_ADDR_BIT_7 (C++ 枚举子), 854
I2C_ADDR_BIT_MAX (C++ 枚举子), 854
i2c_addr_mode_t (C++ 类型), 853
I2C_APB_CLK_FREQ (C 宏), 852
I2C_CMD_END (C++ 枚举子), 853
i2c_cmd_handle_t (C++ 类型), 852
i2c_cmd_link_create (C++ 函数), 843
i2c_cmd_link_delete (C++ 函数), 843
I2C_CMD_READ (C++ 枚举子), 853
I2C_CMD_RESTART (C++ 枚举子), 853
I2C_CMD_STOP (C++ 枚举子), 853
I2C_CMD_WRITE (C++ 枚举子), 853
i2c_config_t (C++ 类), 851
i2c_config_t::addr_10bit_en (C++ 成员), 852
i2c_config_t::clk_speed (C++ 成员), 852
i2c_config_t::mode (C++ 成员), 852
i2c_config_t::scl_io_num (C++ 成员), 852
i2c_config_t::scl_pullup_en (C++ 成员), 852
i2c_config_t::sda_io_num (C++ 成员), 852
i2c_config_t::sda_pullup_en (C++ 成员), 852
i2c_config_t::slave_addr (C++ 成员), 852
I2C_DATA_MODE_LSB_FIRST (C++ 枚举子), 853
I2C_DATA_MODE_MAX (C++ 枚举子), 853
I2C_DATA_MODE_MSB_FIRST (C++ 枚举子), 853
i2c_driver_delete (C++ 函数), 841
i2c_driver_install (C++ 函数), 840
I2C_FIFO_LEN (C 宏), 852
i2c_filter_disable (C++ 函数), 848
i2c_filter_enable (C++ 函数), 847
i2c_get_data_mode (C++ 函数), 851
i2c_get_data_timing (C++ 函数), 850
i2c_get_period (C++ 函数), 847
i2c_get_start_timing (C++ 函数), 848
i2c_get_stop_timing (C++ 函数), 849
i2c_get_timeout (C++ 函数), 850
i2c_isr_free (C++ 函数), 842
i2c_isr_register (C++ 函数), 842
I2C_MASTER_ACK (C++ 枚举子), 854
I2C_MASTER_ACK_MAX (C++ 枚举子), 854
i2c_master_cmd_begin (C++ 函数), 845
I2C_MASTER_LAST_NACK (C++ 枚举子), 854
I2C_MASTER_NACK (C++ 枚举子), 854
i2c_master_read (C++ 函数), 845
I2C_MASTER_READ (C++ 枚举子), 853
i2c_master_read_byte (C++ 函数), 844
i2c_master_start (C++ 函数), 843

i2c_master_stop (C++ 函数), 845
i2c_master_write (C++ 函数), 844
I2C_MASTER_WRITE (C++ 枚举子), 853
i2c_master_write_byte (C++ 函数), 843
I2C_MODE_MASTER (C++ 枚举子), 852
I2C_MODE_MAX (C++ 枚举子), 853
I2C_MODE_SLAVE (C++ 枚举子), 852
i2c_mode_t (C++ 类型), 852
I2C_NUM_0 (C++ 枚举子), 853
I2C_NUM_1 (C++ 枚举子), 853
I2C_NUM_MAX (C++ 枚举子), 853
i2c_opmode_t (C++ 类型), 853
i2c_param_config (C++ 函数), 841
i2c_port_t (C++ 类型), 853
i2c_reset_rx_fifo (C++ 函数), 841
i2c_reset_tx_fifo (C++ 函数), 841
i2c_rw_t (C++ 类型), 853
i2c_set_data_mode (C++ 函数), 851
i2c_set_data_timing (C++ 函数), 849
i2c_set_period (C++ 函数), 847
i2c_set_pin (C++ 函数), 842
i2c_set_start_timing (C++ 函数), 848
i2c_set_stop_timing (C++ 函数), 849
i2c_set_timeout (C++ 函数), 850
i2c_slave_read_buffer (C++ 函数), 846
i2c_slave_write_buffer (C++ 函数), 846
i2c_trans_mode_t (C++ 类型), 853
i2s_adc_disable (C++ 函数), 864
i2s_adc_enable (C++ 函数), 864
I2S_BITS_PER_SAMPLE_16BIT (C++ 枚举子), 866
I2S_BITS_PER_SAMPLE_24BIT (C++ 枚举子), 866
I2S_BITS_PER_SAMPLE_32BIT (C++ 枚举子), 866
I2S_BITS_PER_SAMPLE_8BIT (C++ 枚举子), 866
i2s_bits_per_sample_t (C++ 类型), 866
I2S_CHANNEL_FMT_ALL_LEFT (C++ 枚举子), 867
I2S_CHANNEL_FMT_ALL_RIGHT (C++ 枚举子), 867
I2S_CHANNEL_FMT_ONLY_LEFT (C++ 枚举子), 867
I2S_CHANNEL_FMT_ONLY_RIGHT (C++ 枚举子), 867
I2S_CHANNEL_FMT_RIGHT_LEFT (C++ 枚举子), 867
i2s_channel_fmt_t (C++ 类型), 867
I2S_CHANNEL_MONO (C++ 枚举子), 866
I2S_CHANNEL_STEREO (C++ 枚举子), 867
i2s_channel_t (C++ 类型), 866
I2S_COMM_FORMAT_I2S (C++ 枚举子), 867
I2S_COMM_FORMAT_I2S_LSB (C++ 枚举子), 867
I2S_COMM_FORMAT_I2S_MSB (C++ 枚举子), 867
I2S_COMM_FORMAT_PCM (C++ 枚举子), 867
I2S_COMM_FORMAT_PCM_LONG (C++ 枚举子), 867
I2S_COMM_FORMAT_PCM_SHORT (C++ 枚举子), 867
i2s_comm_format_t (C++ 类型), 867
i2s_config_t (C++ 类), 864
i2s_config_t::bits_per_sample (C++ 成员), 865
i2s_config_t::channel_format (C++ 成员), 865
i2s_config_t::communication_format (C++ 成员), 865
i2s_config_t::dma_buf_count (C++ 成员), 865
i2s_config_t::dma_buf_len (C++ 成员), 865
i2s_config_t::fixed_mclk (C++ 成员), 865
i2s_config_t::intr_alloc_flags (C++ 成员), 865
i2s_config_t::mode (C++ 成员), 864
i2s_config_t::sample_rate (C++ 成员), 864
i2s_config_t::tx_desc_auto_clear (C++ 成员), 865
i2s_config_t::use_apll (C++ 成员), 865
I2S_DAC_CHANNEL_BOTH_EN (C++ 枚举子), 869
I2S_DAC_CHANNEL_DISABLE (C++ 枚举子), 869
I2S_DAC_CHANNEL_LEFT_EN (C++ 枚举子), 869
I2S_DAC_CHANNEL_MAX (C++ 枚举子), 869
I2S_DAC_CHANNEL_RIGHT_EN (C++ 枚举子), 869
i2s_dac_mode_t (C++ 类型), 869
i2s_driver_install (C++ 函数), 858
i2s_driver_uninstall (C++ 函数), 858
I2S_EVENT_DMA_ERROR (C++ 枚举子), 868
I2S_EVENT_MAX (C++ 枚举子), 869
I2S_EVENT_RX_DONE (C++ 枚举子), 869
i2s_event_t (C++ 类), 865
i2s_event_t::size (C++ 成员), 865
i2s_event_t::type (C++ 成员), 865
I2S_EVENT_TX_DONE (C++ 枚举子), 868
i2s_event_type_t (C++ 类型), 868
i2s_get_clk (C++ 函数), 863
i2s_isr_handle_t (C++ 类型), 866
I2S_MODE_ADC_BUILT_IN (C++ 枚举子), 868

I2S_MODE_DAC_BUILT_IN (C++ 枚举子), 868
I2S_MODE_MASTER (C++ 枚举子), 868
I2S_MODE_PDM (C++ 枚举子), 868
I2S_MODE_RX (C++ 枚举子), 868
I2S_MODE_SLAVE (C++ 枚举子), 868
i2s_mode_t (C++ 类型), 868
I2S_MODE_TX (C++ 枚举子), 868
I2S_NUM_0 (C++ 枚举子), 868
I2S_NUM_1 (C++ 枚举子), 868
I2S_NUM_MAX (C++ 枚举子), 868
I2S_PDM_DSR_16S (C++ 枚举子), 869
I2S_PDM_DSR_8S (C++ 枚举子), 869
I2S_PDM_DSR_MAX (C++ 枚举子), 869
i2s_pdm_dsr_t (C++ 类型), 869
i2s_pin_config_t (C++ 类), 865
i2s_pin_config_t::bck_io_num (C++ 成员), 866
i2s_pin_config_t::data_in_num (C++ 成员), 866
i2s_pin_config_t::data_out_num (C++ 成员), 866
i2s_pin_config_t::ws_io_num (C++ 成员), 866
I2S_PIN_NO_CHANGE (C 宏), 866
i2s_pop_sample (C++ 函数), 861
i2s_port_t (C++ 类型), 868
i2s_push_sample (C++ 函数), 861
i2s_read (C++ 函数), 860
i2s_read_bytes (C++ 函数), 860
i2s_set_adc_mode (C++ 函数), 863
i2s_set_clk (C++ 函数), 863
i2s_set_dac_mode (C++ 函数), 858
i2s_set_pdm_rx_down_sample (C++ 函数), 857
i2s_set_pin (C++ 函数), 857
i2s_set_sample_rates (C++ 函数), 861
i2s_start (C++ 函数), 862
i2s_stop (C++ 函数), 862
i2s_write (C++ 函数), 859
i2s_write_bytes (C++ 函数), 858
i2s_write_expand (C++ 函数), 859
i2s_zero_dma_buffer (C++ 函数), 862
I_ADDI (C 宏), 2038
I_ADDR (C 宏), 2038
I_ANDI (C 宏), 2038
I_ANDR (C 宏), 2038
I_BGE (C 宏), 2037
I_BL (C 宏), 2037
I_BXFI (C 宏), 2038
I_BXFR (C 宏), 2038
I_BXI (C 宏), 2037
I_BXR (C 宏), 2037
I_BXZI (C 宏), 2038
I_BXZR (C 宏), 2038
I_DELAY (C 宏), 2036
I_END (C 宏), 2036
I_HALT (C 宏), 2036
I_LD (C 宏), 2037
I_LSHI (C 宏), 2039
I_LSHR (C 宏), 2038
I_MOVI (C 宏), 2039
I_MOVR (C 宏), 2038
I_ORI (C 宏), 2039
I_ORR (C 宏), 2038
I_RD_REG (C 宏), 2037
I_RSHI (C 宏), 2039
I_RSHR (C 宏), 2038
I_ST (C 宏), 2037
I_SUBI (C 宏), 2038
I_SUBR (C 宏), 2038
I_WR_REG (C 宏), 2037
intr_handle_data_t (C++ 类型), 1499
intr_handle_t (C++ 类型), 1499
intr_handler_t (C++ 类型), 1499

L

LEDC_APB_CLK (C++ 枚举子), 886
LEDC_APB_CLK_HZ (C 宏), 885
ledc_bind_channel_timer (C++ 函数), 880
LEDC_CHANNEL_0 (C++ 枚举子), 886
LEDC_CHANNEL_1 (C++ 枚举子), 887
LEDC_CHANNEL_2 (C++ 枚举子), 887
LEDC_CHANNEL_3 (C++ 枚举子), 887
LEDC_CHANNEL_4 (C++ 枚举子), 887
LEDC_CHANNEL_5 (C++ 枚举子), 887
LEDC_CHANNEL_6 (C++ 枚举子), 887
LEDC_CHANNEL_7 (C++ 枚举子), 887
ledc_channel_config (C++ 函数), 874

ledc_channel_config_t (C++ 类), 884
ledc_channel_config_t::channel (C++ 成员), 884
ledc_channel_config_t::duty (C++ 成员), 884
ledc_channel_config_t::gpio_num (C++ 成员), 884
ledc_channel_config_t::hpoint (C++ 成员), 884
ledc_channel_config_t::intr_type (C++ 成员), 884
ledc_channel_config_t::speed_mode (C++ 成员), 884
ledc_channel_config_t::timer_sel (C++ 成员), 884
LEDC_CHANNEL_MAX (C++ 枚举子), 887
ledc_channel_t (C++ 类型), 886
ledc_clk_src_t (C++ 类型), 886
LEDC_DUTY_DIR_DECREASE (C++ 枚举子), 886
LEDC_DUTY_DIR_INCREASE (C++ 枚举子), 886
LEDC_DUTY_DIR_MAX (C++ 枚举子), 886
ledc_duty_direction_t (C++ 类型), 886
LEDC_ERR_DUTY (C 宏), 885
LEDC_ERR_VAL (C 宏), 885
ledc_fade_func_install (C++ 函数), 882
ledc_fade_func_uninstall (C++ 函数), 882
LEDC_FADE_MAX (C++ 枚举子), 888
ledc_fade_mode_t (C++ 类型), 888
LEDC_FADE_NO_WAIT (C++ 枚举子), 888
ledc_fade_start (C++ 函数), 882
LEDC_FADE_WAIT_DONE (C++ 枚举子), 888
ledc_get_duty (C++ 函数), 877
ledc_get_freq (C++ 函数), 876
ledc_get_hpoint (C++ 函数), 877
LEDC_HIGH_SPEED_MODE (C++ 枚举子), 885
LEDC_INTR_DISABLE (C++ 枚举子), 886
LEDC_INTR_FADE_END (C++ 枚举子), 886
ledc_intr_type_t (C++ 类型), 886
ledc_isr_handle_t (C++ 类型), 885
ledc_isr_register (C++ 函数), 878
LEDC_LOW_SPEED_MODE (C++ 枚举子), 885
ledc_mode_t (C++ 类型), 885
LEDC_REF_CLK_HZ (C 宏), 885
LEDC_REF_TICK (C++ 枚举子), 886
ledc_set_duty (C++ 函数), 877
ledc_set_duty_and_update (C++ 函数), 882
ledc_set_duty_with_hpoint (C++ 函数), 876
ledc_set_fade (C++ 函数), 878
ledc_set_fade_step_and_start (C++ 函数), 883
ledc_set_fade_time_and_start (C++ 函数), 883
ledc_set_fade_with_step (C++ 函数), 880
ledc_set_fade_with_time (C++ 函数), 881
ledc_set_freq (C++ 函数), 876
ledc_set_pin (C++ 函数), 875
LEDC_SPEED_MODE_MAX (C++ 枚举子), 885
ledc_stop (C++ 函数), 875
LEDC_TIMER_0 (C++ 枚举子), 886
LEDC_TIMER_1 (C++ 枚举子), 886
LEDC_TIMER_10_BIT (C++ 枚举子), 888
LEDC_TIMER_11_BIT (C++ 枚举子), 888
LEDC_TIMER_12_BIT (C++ 枚举子), 888
LEDC_TIMER_13_BIT (C++ 枚举子), 888
LEDC_TIMER_14_BIT (C++ 枚举子), 888
LEDC_TIMER_15_BIT (C++ 枚举子), 888
LEDC_TIMER_16_BIT (C++ 枚举子), 888
LEDC_TIMER_17_BIT (C++ 枚举子), 888
LEDC_TIMER_18_BIT (C++ 枚举子), 888
LEDC_TIMER_19_BIT (C++ 枚举子), 888
LEDC_TIMER_1_BIT (C++ 枚举子), 887
LEDC_TIMER_2 (C++ 枚举子), 886
LEDC_TIMER_20_BIT (C++ 枚举子), 888
LEDC_TIMER_2_BIT (C++ 枚举子), 887
LEDC_TIMER_3 (C++ 枚举子), 886
LEDC_TIMER_3_BIT (C++ 枚举子), 887
LEDC_TIMER_4_BIT (C++ 枚举子), 887
LEDC_TIMER_5_BIT (C++ 枚举子), 887
LEDC_TIMER_6_BIT (C++ 枚举子), 887
LEDC_TIMER_7_BIT (C++ 枚举子), 887
LEDC_TIMER_8_BIT (C++ 枚举子), 887
LEDC_TIMER_9_BIT (C++ 枚举子), 887
LEDC_TIMER_BIT_MAX (C++ 枚举子), 888
ledc_timer_bit_t (C++ 类型), 887
ledc_timer_config (C++ 函数), 874
ledc_timer_config_t (C++ 类), 884
ledc_timer_config_t::bit_num (C++ 成员), 885

ledc_timer_config_t::duty_resolution (C++ 成员), 885
ledc_timer_config_t::freq_hz (C++ 成员), 885
ledc_timer_config_t::speed_mode (C++ 成员), 885
ledc_timer_config_t::timer_num (C++ 成员), 885
LEDC_TIMER_MAX (C++ 枚举子), 886
ledc_timer_pause (C++ 函数), 879
ledc_timer_resume (C++ 函数), 880
ledc_timer_rst (C++ 函数), 879
ledc_timer_set (C++ 函数), 879
ledc_timer_t (C++ 类型), 886
ledc_update_duty (C++ 函数), 874

M

M_BGE (C 宏), 2039
M_BL (C 宏), 2039
M_BX (C 宏), 2039
M_BXF (C 宏), 2039
M_BXZ (C 宏), 2039
M_LABEL (C 宏), 2039
MALLOC_CAP_32BIT (C 宏), 1470
MALLOC_CAP_8BIT (C 宏), 1470
MALLOC_CAP_DEFAULT (C 宏), 1470
MALLOC_CAP_DMA (C 宏), 1470
MALLOC_CAP_EXEC (C 宏), 1469
MALLOC_CAP_INTERNAL (C 宏), 1470
MALLOC_CAP_INVALID (C 宏), 1470
MALLOC_CAP_PID2 (C 宏), 1470
MALLOC_CAP_PID3 (C 宏), 1470
MALLOC_CAP_PID4 (C 宏), 1470
MALLOC_CAP_PID5 (C 宏), 1470
MALLOC_CAP_PID6 (C 宏), 1470
MALLOC_CAP_PID7 (C 宏), 1470
MALLOC_CAP_SPIRAM (C 宏), 1470
MAX_BLE_DEVNAME_LEN (C 宏), 1204
MAX_FDS (C 宏), 1299
mbcontroller_check_event (C++ 函数), 1175
mbcontroller_destroy (C++ 函数), 1176
mbcontroller_get_param_info (C++ 函数), 1176
mbcontroller_init (C++ 函数), 1174
mbcontroller_set_descriptor (C++ 函数), 1175
mbcontroller_setup (C++ 函数), 1175
mbcontroller_start (C++ 函数), 1175
MCPWM0A (C++ 枚举子), 909
MCPWM0B (C++ 枚举子), 909
MCPWM1A (C++ 枚举子), 909
MCPWM1B (C++ 枚举子), 910
MCPWM2A (C++ 枚举子), 910
MCPWM2B (C++ 枚举子), 910
mcpwm_action_on_pwmxa_t (C++ 类型), 913
mcpwm_action_on_pwmxb_t (C++ 类型), 913
MCPWM_ACTIVE_HIGH_COMPLIMENT_MODE (C++ 枚举子), 914
MCPWM_ACTIVE_HIGH_MODE (C++ 枚举子), 914
MCPWM_ACTIVE_LOW_COMPLIMENT_MODE (C++ 枚举子), 914
MCPWM_ACTIVE_LOW_MODE (C++ 枚举子), 914
MCPWM_ACTIVE_RED_FED_FROM_PWMXA (C++ 枚举子), 914
MCPWM_ACTIVE_RED_FED_FROM_PWMXB (C++ 枚举子), 914
MCPWM_BYPASS_FED (C++ 枚举子), 914
MCPWM_BYPASS_RED (C++ 枚举子), 914
MCPWM_CAP_0 (C++ 枚举子), 910
MCPWM_CAP_1 (C++ 枚举子), 910
MCPWM_CAP_2 (C++ 枚举子), 910
mcpwm_capture_disable (C++ 函数), 905
mcpwm_capture_enable (C++ 函数), 905
mcpwm_capture_on_edge_t (C++ 类型), 914
mcpwm_capture_signal_get_edge (C++ 函数), 906
mcpwm_capture_signal_get_value (C++ 函数), 906
mcpwm_capture_signal_t (C++ 类型), 913
mcpwm_carrier_config_t (C++ 类), 909
mcpwm_carrier_config_t::carrier_duty (C++ 成员), 909
mcpwm_carrier_config_t::carrier_ivt_mode (C++ 成员), 909
mcpwm_carrier_config_t::carrier_os_mode (C++ 成员), 909
mcpwm_carrier_config_t::carrier_period (C++ 成员), 909

mcpwm_carrier_config_t::pulse_width_in_os (C++ 成员), 909
mcpwm_carrier_disable (C++ 函数), 901
mcpwm_carrier_enable (C++ 函数), 900
mcpwm_carrier_init (C++ 函数), 900
mcpwm_carrier_oneshot_mode_disable (C++ 函数), 902
mcpwm_carrier_oneshot_mode_enable (C++ 函数), 902
mcpwm_carrier_os_t (C++ 类型), 912
MCPWM_CARRIER_OUT_IVT_DIS (C++ 枚举子), 912
MCPWM_CARRIER_OUT_IVT_EN (C++ 枚举子), 912
mcpwm_carrier_out_ivt_t (C++ 类型), 912
mcpwm_carrier_output_invert (C++ 函数), 902
mcpwm_carrier_set_duty_cycle (C++ 函数), 901
mcpwm_carrier_set_period (C++ 函数), 901
mcpwm_config_t (C++ 类), 908
mcpwm_config_t::cmpr_a (C++ 成员), 908
mcpwm_config_t::cmpr_b (C++ 成员), 908
mcpwm_config_t::counter_mode (C++ 成员), 909
mcpwm_config_t::duty_mode (C++ 成员), 908
mcpwm_config_t::frequency (C++ 成员), 908
MCPWM_COUNTER_MAX (C++ 枚举子), 911
mcpwm_counter_type_t (C++ 类型), 911
mcpwm_deadtime_disable (C++ 函数), 903
mcpwm_deadtime_enable (C++ 函数), 903
MCPWM_DEADTIME_TYPE_MAX (C++ 枚举子), 915
mcpwm_deadtime_type_t (C++ 类型), 914
MCPWM_DOWN_COUNTER (C++ 枚举子), 911
MCPWM_DUTY_MODE_0 (C++ 枚举子), 911
MCPWM_DUTY_MODE_1 (C++ 枚举子), 912
MCPWM_DUTY_MODE_MAX (C++ 枚举子), 912
mcpwm_duty_type_t (C++ 类型), 911
MCPWM_FAULT_0 (C++ 枚举子), 910
MCPWM_FAULT_1 (C++ 枚举子), 910
MCPWM_FAULT_2 (C++ 枚举子), 910
mcpwm_fault_deinit (C++ 函数), 905
mcpwm_fault_init (C++ 函数), 903
mcpwm_fault_input_level_t (C++ 类型), 913
mcpwm_fault_set_cyc_mode (C++ 函数), 904
mcpwm_fault_set_oneshot_mode (C++ 函数), 904
mcpwm_fault_signal_t (C++ 类型), 912
MCPWM_FORCE_MCPWMXA_HIGH (C++ 枚举子), 913
MCPWM_FORCE_MCPWMXA_LOW (C++ 枚举子), 913
MCPWM_FORCE_MCPWMXB_HIGH (C++ 枚举子), 913
MCPWM_FORCE_MCPWMXB_LOW (C++ 枚举子), 913
mcpwm_get_duty (C++ 函数), 898
mcpwm_get_frequency (C++ 函数), 898
mcpwm_gpio_init (C++ 函数), 896
MCPWM_HIGH_LEVEL_TGR (C++ 枚举子), 913
mcpwm_init (C++ 函数), 896
mcpwm_io_signals_t (C++ 类型), 909
mcpwm_isr_register (C++ 函数), 907
MCPWM_LOW_LEVEL_TGR (C++ 枚举子), 913
MCPWM_NEG_EDGE (C++ 枚举子), 914
MCPWM_NO_CHANGE_IN_MCPWMXA (C++ 枚举子), 913
MCPWM_NO_CHANGE_IN_MCPWMXB (C++ 枚举子), 913
MCPWM_ONESHOT_MODE_DIS (C++ 枚举子), 912
MCPWM_ONESHOT_MODE_EN (C++ 枚举子), 912
mcpwm_operator_t (C++ 类型), 911
MCPWM_OPR_A (C++ 枚举子), 911
MCPWM_OPR_B (C++ 枚举子), 911
MCPWM_OPR_MAX (C++ 枚举子), 911
mcpwm_pin_config_t (C++ 类), 907
mcpwm_pin_config_t::mcpwm0a_out_num (C++ 成员), 907
mcpwm_pin_config_t::mcpwm0b_out_num (C++ 成员), 907
mcpwm_pin_config_t::mcpwm1a_out_num (C++ 成员), 907
mcpwm_pin_config_t::mcpwm1b_out_num (C++ 成员), 907
mcpwm_pin_config_t::mcpwm2a_out_num (C++ 成员), 908
mcpwm_pin_config_t::mcpwm2b_out_num (C++ 成员), 908
mcpwm_pin_config_t::mcpwm_cap0_in_num (C++ 成员), 908
mcpwm_pin_config_t::mcpwm_cap1_in_num (C++ 成员), 908
mcpwm_pin_config_t::mcpwm_cap2_in_num (C++ 成员), 908
mcpwm_pin_config_t::mcpwm_fault0_in_num (C++ 成员), 908

mcpwm_pin_config_t::mcpwm_fault1_in_num (C++ 成员), 908
mcpwm_pin_config_t::mcpwm_fault2_in_num (C++ 成员), 908
mcpwm_pin_config_t::mcpwm_sync0_in_num (C++ 成员), 908
mcpwm_pin_config_t::mcpwm_sync1_in_num (C++ 成员), 908
mcpwm_pin_config_t::mcpwm_sync2_in_num (C++ 成员), 908
MCPWM_POS_EDGE (C++ 枚举子), 914
MCPWM_SELECT_CAP0 (C++ 枚举子), 914
MCPWM_SELECT_CAP1 (C++ 枚举子), 914
MCPWM_SELECT_CAP2 (C++ 枚举子), 914
MCPWM_SELECT_F0 (C++ 枚举子), 912
MCPWM_SELECT_F1 (C++ 枚举子), 912
MCPWM_SELECT_F2 (C++ 枚举子), 913
MCPWM_SELECT_SYNC0 (C++ 枚举子), 912
MCPWM_SELECT_SYNC1 (C++ 枚举子), 912
MCPWM_SELECT_SYNC2 (C++ 枚举子), 912
mcpwm_set_duty (C++ 函数), 897
mcpwm_set_duty_in_us (C++ 函数), 897
mcpwm_set_duty_type (C++ 函数), 898
mcpwm_set_frequency (C++ 函数), 897
mcpwm_set_pin (C++ 函数), 896
mcpwm_set_signal_high (C++ 函数), 899
mcpwm_set_signal_low (C++ 函数), 899
mcpwm_start (C++ 函数), 899
mcpwm_stop (C++ 函数), 900
MCPWM_SYNC_0 (C++ 枚举子), 910
MCPWM_SYNC_1 (C++ 枚举子), 910
MCPWM_SYNC_2 (C++ 枚举子), 910
mcpwm_sync_disable (C++ 函数), 906
mcpwm_sync_enable (C++ 函数), 906
mcpwm_sync_signal_t (C++ 类型), 912
MCPWM_TIMER_0 (C++ 枚举子), 911
MCPWM_TIMER_1 (C++ 枚举子), 911
MCPWM_TIMER_2 (C++ 枚举子), 911
MCPWM_TIMER_MAX (C++ 枚举子), 911
mcpwm_timer_t (C++ 类型), 910
MCPWM_TOG_MCPWMXA (C++ 枚举子), 913
MCPWM_TOG_MCPWMXB (C++ 枚举子), 913
MCPWM_UNIT_0 (C++ 枚举子), 910
MCPWM_UNIT_1 (C++ 枚举子), 910
MCPWM_UNIT_MAX (C++ 枚举子), 910
mcpwm_unit_t (C++ 类型), 910
MCPWM_UP_COUNTER (C++ 枚举子), 911
MCPWM_UP_DOWN_COUNTER (C++ 枚举子), 911
mdns_free (C++ 函数), 1088
mdns_handle_system_event (C++ 函数), 1095
mdns_hostname_set (C++ 函数), 1089
mdns_init (C++ 函数), 1088
mdns_instance_name_set (C++ 函数), 1089
mdns_ip_addr_s (C++ 类), 1095
mdns_ip_addr_s::addr (C++ 成员), 1096
mdns_ip_addr_s::next (C++ 成员), 1096
mdns_ip_addr_t (C++ 类型), 1097
MDNS_IP_PROTOCOL_MAX (C++ 枚举子), 1097
mdns_ip_protocol_t (C++ 类型), 1097
MDNS_IP_PROTOCOL_V4 (C++ 枚举子), 1097
MDNS_IP_PROTOCOL_V6 (C++ 枚举子), 1097
mdns_query (C++ 函数), 1092
mdns_query_a (C++ 函数), 1094
mdns_query_aaaa (C++ 函数), 1094
mdns_query_ptr (C++ 函数), 1093
mdns_query_results_free (C++ 函数), 1093
mdns_query_srv (C++ 函数), 1093
mdns_query_txt (C++ 函数), 1094
mdns_result_s (C++ 类), 1096
mdns_result_s::addr (C++ 成员), 1096
mdns_result_s::hostname (C++ 成员), 1096
mdns_result_s::instance_name (C++ 成员), 1096
mdns_result_s::ip_protocol (C++ 成员), 1096
mdns_result_s::next (C++ 成员), 1096
mdns_result_s::port (C++ 成员), 1096
mdns_result_s::tcpip_if (C++ 成员), 1096
mdns_result_s::txt (C++ 成员), 1096
mdns_result_s::txt_count (C++ 成员), 1096
mdns_result_t (C++ 类型), 1097
mdns_service_add (C++ 函数), 1089
mdns_service_instance_name_set (C++ 函数), 1090
mdns_service_port_set (C++ 函数), 1090
mdns_service_remove (C++ 函数), 1090

mdns_service_remove_all (C++ 函数), 1092
mdns_service_txt_item_remove (C++ 函数), 1091
mdns_service_txt_item_set (C++ 函数), 1091
mdns_service_txt_set (C++ 函数), 1091
mdns_txt_item_t (C++ 类), 1095
mdns_txt_item_t::key (C++ 成员), 1095
mdns_txt_item_t::value (C++ 成员), 1095
MDNS_TYPE_A (C 宏), 1096
MDNS_TYPE_AAAA (C 宏), 1096
MDNS_TYPE_ANY (C 宏), 1097
MDNS_TYPE_NSEC (C 宏), 1097
MDNS_TYPE_OPT (C 宏), 1097
MDNS_TYPE_PTR (C 宏), 1096
MDNS_TYPE_SRV (C 宏), 1096
MDNS_TYPE_TXT (C 宏), 1096
mesh_addr_t (C++ 类型), 728
mesh_addr_t::addr (C++ 成员), 728
mesh_addr_t::mip (C++ 成员), 728
mesh_ap_cfg_t (C++ 类), 734
mesh_ap_cfg_t::max_connection (C++ 成员), 734
mesh_ap_cfg_t::password (C++ 成员), 734
MESH_ASSOC_FLAG_NETWORK_FREE (C 宏), 738
MESH_ASSOC_FLAG_ROOT_FIXED (C 宏), 738
MESH_ASSOC_FLAG_ROOTS_FOUND (C 宏), 738
MESH_ASSOC_FLAG_VOTE_IN_PROGRESS (C 宏), 738
mesh_cfg_t (C++ 类), 734
mesh_cfg_t::allow_channel_switch (C++ 成员), 734
mesh_cfg_t::channel (C++ 成员), 734
mesh_cfg_t::crypto_funcs (C++ 成员), 735
mesh_cfg_t::event_cb (C++ 成员), 734
mesh_cfg_t::mesh_ap (C++ 成员), 735
mesh_cfg_t::mesh_id (C++ 成员), 734
mesh_cfg_t::router (C++ 成员), 735
MESH_DATA_DROP (C 宏), 738
MESH_DATA_ENC (C 宏), 737
MESH_DATA_FROMDS (C 宏), 738
MESH_DATA_GROUP (C 宏), 738
MESH_DATA_NONBLOCK (C 宏), 738
MESH_DATA_P2P (C 宏), 738
mesh_data_t (C++ 类), 733
mesh_data_t::data (C++ 成员), 733
mesh_data_t::proto (C++ 成员), 733
mesh_data_t::size (C++ 成员), 733
mesh_data_t::tos (C++ 成员), 733
MESH_DATA_TODS (C 宏), 738
mesh_disconnect_reason_t (C++ 类型), 742
mesh_event_cb_t (C++ 类型), 739
MESH_EVENT_CHANNEL_SWITCH (C++ 枚举子), 739
mesh_event_channel_switch_t (C++ 类), 730
mesh_event_channel_switch_t::channel (C++ 成员), 730
MESH_EVENT_CHILD_CONNECTED (C++ 枚举子), 739
mesh_event_child_connected_t (C++ 类型), 739
MESH_EVENT_CHILD_DISCONNECTED (C++ 枚举子), 739
mesh_event_child_disconnected_t (C++ 类型), 739
mesh_event_connected_t (C++ 类), 730
mesh_event_connected_t::connected (C++ 成员), 730
mesh_event_connected_t::self_layer (C++ 成员), 730
mesh_event_disconnected_t (C++ 类型), 739
MESH_EVENT_FIND_NETWORK (C++ 枚举子), 741
mesh_event_find_network_t (C++ 类), 731
mesh_event_find_network_t::channel (C++ 成员), 731
mesh_event_find_network_t::router_bssid (C++ 成员), 731
mesh_event_id_t (C++ 类型), 739
mesh_event_info_t (C++ 类型), 728
mesh_event_info_t::channel_switch (C++ 成员), 728
mesh_event_info_t::child_connected (C++ 成员), 728
mesh_event_info_t::child_disconnected (C++ 成员), 728
mesh_event_info_t::connected (C++ 成员), 728
mesh_event_info_t::disconnected (C++ 成员), 728
mesh_event_info_t::find_network (C++ 成员), 729
mesh_event_info_t::got_ip (C++ 成员), 729

mesh_event_info_t::layer_change (C++ 成员), 728
mesh_event_info_t::network_state (C++ 成员), 729
mesh_event_info_t::no_parent (C++ 成员), 728
mesh_event_info_t::root_addr (C++ 成员), 729
mesh_event_info_t::root_conflict (C++ 成员), 729
mesh_event_info_t::root_fixed (C++ 成员), 729
mesh_event_info_t::router_switch (C++ 成员), 729
mesh_event_info_t::routing_table (C++ 成员), 728
mesh_event_info_t::scan_done (C++ 成员), 729
mesh_event_info_t::switch_req (C++ 成员), 729
mesh_event_info_t::toDS_state (C++ 成员), 729
mesh_event_info_t::vote_started (C++ 成员), 729
MESH_EVENT_LAYER_CHANGE (C++ 枚举子), 740
mesh_event_layer_change_t (C++ 类), 730
mesh_event_layer_change_t::new_layer (C++ 成员), 731
MESH_EVENT_MAX (C++ 枚举子), 741
MESH_EVENT_NETWORK_STATE (C++ 枚举子), 740
mesh_event_network_state_t (C++ 类), 732
mesh_event_network_state_t::is_rootless (C++ 成员), 732
MESH_EVENT_NO_PARENT_FOUND (C++ 枚举子), 740
mesh_event_no_parent_found_t (C++ 类), 730
mesh_event_no_parent_found_t::scan_times (C++ 成员), 730
MESH_EVENT_PARENT_CONNECTED (C++ 枚举子), 739
MESH_EVENT_PARENT_DISCONNECTED (C++ 枚举子), 740
MESH_EVENT_ROOT_ADDRESS (C++ 枚举子), 740
mesh_event_root_address_t (C++ 类型), 738
MESH_EVENT_ROOT_ASKED_YIELD (C++ 枚举子), 740
mesh_event_root_conflict_t (C++ 类), 731
mesh_event_root_conflict_t::addr (C++ 成员), 732
mesh_event_root_conflict_t::capacity (C++ 成员), 732
mesh_event_root_conflict_t::rssi (C++ 成员), 732
MESH_EVENT_ROOT_FIXED (C++ 枚举子), 740
mesh_event_root_fixed_t (C++ 类), 732
mesh_event_root_fixed_t::is_fixed (C++ 成员), 732
MESH_EVENT_ROOT_GOT_IP (C++ 枚举子), 740
mesh_event_root_got_ip_t (C++ 类型), 738
MESH_EVENT_ROOT_LOST_IP (C++ 枚举子), 740
MESH_EVENT_ROOT_SWITCH_ACK (C++ 枚举子), 740
MESH_EVENT_ROOT_SWITCH_REQ (C++ 枚举子), 740
mesh_event_root_switch_req_t (C++ 类), 731
mesh_event_root_switch_req_t::rc_addr (C++ 成员), 731
mesh_event_root_switch_req_t::reason (C++ 成员), 731
MESH_EVENT_ROUTER_SWITCH (C++ 枚举子), 741
mesh_event_router_switch_t (C++ 类型), 739
MESH_EVENT_ROUTING_TABLE_ADD (C++ 枚举子), 739
mesh_event_routing_table_change_t (C++ 类), 732
mesh_event_routing_table_change_t::rt_size_change (C++ 成员), 732
mesh_event_routing_table_change_t::rt_size_new (C++ 成员), 732
MESH_EVENT_ROUTING_TABLE_REMOVE (C++ 枚举子), 739
MESH_EVENT_SCAN_DONE (C++ 枚举子), 740
mesh_event_scan_done_t (C++ 类), 732
mesh_event_scan_done_t::number (C++ 成员), 732
MESH_EVENT_STARTED (C++ 枚举子), 739
MESH_EVENT_STOP_RECONNECTION (C++ 枚举子), 741
MESH_EVENT_STOPPED (C++ 枚举子), 739
mesh_event_t (C++ 类), 732
mesh_event_t::id (C++ 成员), 733
mesh_event_t::info (C++ 成员), 733
MESH_EVENT_TODS_STATE (C++ 枚举子), 740
mesh_event_toDS_state_t (C++ 类型), 743
MESH_EVENT_VOTE_STARTED (C++ 枚举子), 740

mesh_event_vote_started_t (C++ 类), 731
mesh_event_vote_started_t::attempts (C++ 成员), 731
mesh_event_vote_started_t::rc_addr (C++ 成员), 731
mesh_event_vote_started_t::reason (C++ 成员), 731
MESH_EVENT_VOTE_STOPPED (C++ 枚举子), 740
MESH_IDLE (C++ 枚举子), 741
MESH_INIT_CONFIG_DEFAULT (C 宏), 738
MESH_LEAF (C++ 枚举子), 741
MESH_MPS (C 宏), 736
MESH_MTU (C 宏), 736
MESH_NODE (C++ 枚举子), 741
MESH_OPT_RECV_DS_ADDR (C 宏), 738
MESH_OPT_SEND_GROUP (C 宏), 738
mesh_opt_t (C++ 类), 733
mesh_opt_t::len (C++ 成员), 733
mesh_opt_t::type (C++ 成员), 733
mesh_opt_t::val (C++ 成员), 733
MESH_PROTO_BIN (C++ 枚举子), 741
MESH_PROTO_HTTP (C++ 枚举子), 741
MESH_PROTO_JSON (C++ 枚举子), 741
MESH_PROTO_MQTT (C++ 枚举子), 741
mesh_proto_t (C++ 类型), 741
mesh_rc_config_t (C++ 类型), 729
mesh_rc_config_t::attempts (C++ 成员), 729
mesh_rc_config_t::rc_addr (C++ 成员), 729
MESH_REASON_CYCLIC (C++ 枚举子), 742
MESH_REASON_DIFF_ID (C++ 枚举子), 742
MESH_REASON_EMPTY_PASSWORD (C++ 枚举子), 743
MESH_REASON_IE_UNKNOWN (C++ 枚举子), 742
MESH_REASON_LEAF (C++ 枚举子), 742
MESH_REASON_PARENT_IDLE (C++ 枚举子), 742
MESH_REASON_PARENT_STOPPED (C++ 枚举子), 742
MESH_REASON_PARENT_UNENCRYPTED (C++ 枚举子), 743
MESH_REASON_PARENT_WORSE (C++ 枚举子), 743
MESH_REASON_ROOTS (C++ 枚举子), 742
MESH_REASON_SCAN_FAIL (C++ 枚举子), 742
MESH_REASON_WAIVE_ROOT (C++ 枚举子), 742
MESH_ROOT (C++ 枚举子), 741
MESH_ROOT_LAYER (C 宏), 736
mesh_router_t (C++ 类), 733
mesh_router_t::allow_router_switch (C++ 成员), 734
mesh_router_t::bssid (C++ 成员), 734
mesh_router_t::password (C++ 成员), 734
mesh_router_t::ssid (C++ 成员), 734
mesh_router_t::ssid_len (C++ 成员), 734
mesh_rx_pending_t (C++ 类), 735
mesh_rx_pending_t::toDS (C++ 成员), 736
mesh_rx_pending_t::toSelf (C++ 成员), 736
MESH_STA (C++ 枚举子), 741
MESH_TODS_REACHABLE (C++ 枚举子), 743
MESH_TODS_UNREACHABLE (C++ 枚举子), 743
MESH_TOS_DEF (C++ 枚举子), 742
MESH_TOS_E2E (C++ 枚举子), 742
MESH_TOS_P2P (C++ 枚举子), 742
mesh_tos_t (C++ 类型), 741
mesh_tx_pending_t (C++ 类), 735
mesh_tx_pending_t::broadcast (C++ 成员), 735
mesh_tx_pending_t::mgmt (C++ 成员), 735
mesh_tx_pending_t::to_child (C++ 成员), 735
mesh_tx_pending_t::to_child_p2p (C++ 成员), 735
mesh_tx_pending_t::to_parent (C++ 成员), 735
mesh_tx_pending_t::to_parent_p2p (C++ 成员), 735
mesh_type_t (C++ 类型), 741
MESH_VOTE_REASON_CHILD_INITIATED (C++ 枚举子), 742
MESH_VOTE_REASON_ROOT_INITIATED (C++ 枚举子), 742
mesh_vote_reason_t (C++ 类型), 742
mesh_vote_t (C++ 类), 735
mesh_vote_t::config (C++ 成员), 735
mesh_vote_t::is_rc_specified (C++ 成员), 735
mesh_vote_t::percentage (C++ 成员), 735
mip_t (C++ 类), 730
mip_t::ip4 (C++ 成员), 730
mip_t::port (C++ 成员), 730
MQTT_CONNECTION_ACCEPTED (C++ 枚举子), 1172
MQTT_CONNECTION_REFUSE_BAD_USERNAME (C++ 枚

举子), 1173
MQTT_CONNECTION_REFUSE_ID_REJECTED (C++ 枚举子), 1173
MQTT_CONNECTION_REFUSE_NOT_AUTHORIZED (C++ 枚举子), 1173
MQTT_CONNECTION_REFUSE_PROTOCOL (C++ 枚举子), 1172
MQTT_CONNECTION_REFUSE_SERVER_UNAVAILABLE (C++ 枚举子), 1173
MQTT_ERROR_TYPE_CONNECTION_REFUSED (C++ 枚举子), 1173
MQTT_ERROR_TYPE_ESP_TLS (C 宏), 1170
MQTT_ERROR_TYPE_NONE (C++ 枚举子), 1173
MQTT_ERROR_TYPE_TCP_TRANSPORT (C++ 枚举子), 1173
MQTT_EVENT_ANY (C++ 枚举子), 1171
MQTT_EVENT_BEFORE_CONNECT (C++ 枚举子), 1172
mqtt_event_callback_t (C++ 类型), 1171
MQTT_EVENT_CONNECTED (C++ 枚举子), 1171
MQTT_EVENT_DATA (C++ 枚举子), 1172
MQTT_EVENT_DELETED (C++ 枚举子), 1172
MQTT_EVENT_DISCONNECTED (C++ 枚举子), 1171
MQTT_EVENT_ERROR (C++ 枚举子), 1171
MQTT_EVENT_PUBLISHED (C++ 枚举子), 1172
MQTT_EVENT_SUBSCRIBED (C++ 枚举子), 1172
MQTT_EVENT_UNSUBSCRIBED (C++ 枚举子), 1172
MQTT_PROTOCOL_UNDEFINED (C++ 枚举子), 1173
MQTT_PROTOCOL_V_3_1 (C++ 枚举子), 1173
MQTT_PROTOCOL_V_3_1_1 (C++ 枚举子), 1173
MQTT_TRANSPORT_OVER_SSL (C++ 枚举子), 1173
MQTT_TRANSPORT_OVER_TCP (C++ 枚举子), 1173
MQTT_TRANSPORT_OVER_WS (C++ 枚举子), 1173
MQTT_TRANSPORT_OVER_WSS (C++ 枚举子), 1173
MQTT_TRANSPORT_UNKNOWN (C++ 枚举子), 1173
multi_heap_check (C++ 函数), 1475
multi_heap_dump (C++ 函数), 1474
multi_heap_free (C++ 函数), 1473
multi_heap_free_size (C++ 函数), 1475
multi_heap_get_allocated_size (C++ 函数), 1473
multi_heap_get_info (C++ 函数), 1475
multi_heap_handle_t (C++ 类型), 1476
multi_heap_info_t (C++ 类), 1476
multi_heap_info_t::allocated_blocks (C++ 成员), 1476
multi_heap_info_t::free_blocks (C++ 成员), 1476
multi_heap_info_t::largest_free_block (C++ 成员), 1476
multi_heap_info_t::minimum_free_bytes (C++ 成员), 1476
multi_heap_info_t::total_allocated_bytes (C++ 成员), 1476
multi_heap_info_t::total_blocks (C++ 成员), 1476
multi_heap_info_t::total_free_bytes (C++ 成员), 1476
multi_heap_malloc (C++ 函数), 1473
multi_heap_minimum_free_size (C++ 函数), 1475
multi_heap_realloc (C++ 函数), 1473
multi_heap_register (C++ 函数), 1474
multi_heap_set_lock (C++ 函数), 1474

N

name_uuid (C++ 类), 1203
name_uuid::name (C++ 成员), 1203
name_uuid::uuid (C++ 成员), 1203
nvs_close (C++ 函数), 1280
nvs_commit (C++ 函数), 1279
NVS_DEFAULT_PART_NAME (C 宏), 1284
nvs_erase_all (C++ 函数), 1279
nvs_erase_key (C++ 函数), 1279
nvs_flash_deinit (C++ 函数), 1270
nvs_flash_deinit_partition (C++ 函数), 1271
nvs_flash_erase (C++ 函数), 1271
nvs_flash_erase_partition (C++ 函数), 1271
nvs_flash_generate_keys (C++ 函数), 1272
nvs_flash_init (C++ 函数), 1270
nvs_flash_init_partition (C++ 函数), 1270
nvs_flash_read_security_cfg (C++ 函数), 1273
nvs_flash_secure_init (C++ 函数), 1272
nvs_flash_secure_init_partition (C++ 函数), 1272
nvs_get_blob (C++ 函数), 1277

nvs_get_i16 (C++ 函数), 1275
nvs_get_i32 (C++ 函数), 1275
nvs_get_i64 (C++ 函数), 1275
nvs_get_i8 (C++ 函数), 1274
nvs_get_stats (C++ 函数), 1280
nvs_get_str (C++ 函数), 1275
nvs_get_u16 (C++ 函数), 1275
nvs_get_u32 (C++ 函数), 1275
nvs_get_u64 (C++ 函数), 1275
nvs_get_u8 (C++ 函数), 1275
nvs_get_used_entry_count (C++ 函数), 1281
nvs_handle (C++ 类型), 1284
NVS_KEY_SIZE (C 宏), 1273
nvs_open (C++ 函数), 1277
nvs_open_from_partition (C++ 函数), 1277
nvs_open_mode (C++ 类型), 1284
NVS_READONLY (C++ 枚举子), 1284
NVS_READWRITE (C++ 枚举子), 1284
nvs_sec_cfg_t (C++ 类), 1273
nvs_sec_cfg_t::eky (C++ 成员), 1273
nvs_sec_cfg_t::tky (C++ 成员), 1273
nvs_set_blob (C++ 函数), 1278
nvs_set_i16 (C++ 函数), 1274
nvs_set_i32 (C++ 函数), 1274
nvs_set_i64 (C++ 函数), 1274
nvs_set_i8 (C++ 函数), 1274
nvs_set_str (C++ 函数), 1274
nvs_set_u16 (C++ 函数), 1274
nvs_set_u32 (C++ 函数), 1274
nvs_set_u64 (C++ 函数), 1274
nvs_set_u8 (C++ 函数), 1274
nvs_stats_t (C++ 类), 1282
nvs_stats_t::free_entries (C++ 成员), 1282
nvs_stats_t::namespace_count (C++ 成员), 1282
nvs_stats_t::total_entries (C++ 成员), 1282
nvs_stats_t::used_entries (C++ 成员), 1282
NVS_TYPE_ANY (C++ 枚举子), 1285
NVS_TYPE_BLOB (C++ 枚举子), 1284
NVS_TYPE_I16 (C++ 枚举子), 1284
NVS_TYPE_I32 (C++ 枚举子), 1284
NVS_TYPE_I64 (C++ 枚举子), 1284
NVS_TYPE_I8 (C++ 枚举子), 1284
NVS_TYPE_STR (C++ 枚举子), 1284
nvs_type_t (C++ 类型), 1284
NVS_TYPE_U16 (C++ 枚举子), 1284
NVS_TYPE_U32 (C++ 枚举子), 1284
NVS_TYPE_U64 (C++ 枚举子), 1284
NVS_TYPE_U8 (C++ 枚举子), 1284

O

OTA_SIZE_UNKNOWN (C 宏), 1583

P

PCNT_CHANNEL_0 (C++ 枚举子), 926
PCNT_CHANNEL_1 (C++ 枚举子), 926
PCNT_CHANNEL_MAX (C++ 枚举子), 926
pcnt_channel_t (C++ 类型), 926
pcnt_config_t (C++ 类), 924
pcnt_config_t::channel (C++ 成员), 924
pcnt_config_t::counter_h_lim (C++ 成员), 924
pcnt_config_t::counter_l_lim (C++ 成员), 924
pcnt_config_t::ctrl_gpio_num (C++ 成员), 924
pcnt_config_t::hctrl_mode (C++ 成员), 924
pcnt_config_t::lctrl_mode (C++ 成员), 924
pcnt_config_t::neg_mode (C++ 成员), 924
pcnt_config_t::pos_mode (C++ 成员), 924
pcnt_config_t::pulse_gpio_num (C++ 成员), 924
pcnt_config_t::unit (C++ 成员), 924
PCNT_COUNT_DEC (C++ 枚举子), 925
PCNT_COUNT_DIS (C++ 枚举子), 925
PCNT_COUNT_INC (C++ 枚举子), 925
PCNT_COUNT_MAX (C++ 枚举子), 925
pcnt_count_mode_t (C++ 类型), 925
pcnt_counter_clear (C++ 函数), 918
pcnt_counter_pause (C++ 函数), 917
pcnt_counter_resume (C++ 函数), 918
pcnt_ctrl_mode_t (C++ 类型), 925
pcnt_event_disable (C++ 函数), 919
pcnt_event_enable (C++ 函数), 919
PCNT_EVT_H_LIM (C++ 枚举子), 926
PCNT_EVT_L_LIM (C++ 枚举子), 926
PCNT_EVT_MAX (C++ 枚举子), 927
PCNT_EVT_THRES_0 (C++ 枚举子), 926
PCNT_EVT_THRES_1 (C++ 枚举子), 926

pcnt_evt_type_t (C++ 类型), 926
PCNT_EVT_ZERO (C++ 枚举子), 927
pcnt_filter_disable (C++ 函数), 921
pcnt_filter_enable (C++ 函数), 921
pcnt_get_counter_value (C++ 函数), 917
pcnt_get_event_value (C++ 函数), 920
pcnt_get_filter_value (C++ 函数), 922
pcnt_intr_disable (C++ 函数), 919
pcnt_intr_enable (C++ 函数), 918
pcnt_isr_handle_t (C++ 类型), 925
pcnt_isr_handler_add (C++ 函数), 922
pcnt_isr_handler_remove (C++ 函数), 923
pcnt_isr_register (C++ 函数), 920
pcnt_isr_service_install (C++ 函数), 923
pcnt_isr_service_uninstall (C++ 函数), 923
PCNT_MODE_DISABLE (C++ 枚举子), 925
PCNT_MODE_KEEP (C++ 枚举子), 925
PCNT_MODE_MAX (C++ 枚举子), 925
PCNT_MODE_REVERSE (C++ 枚举子), 925
PCNT_PIN_NOT_USED (C 宏), 924
pcnt_set_event_value (C++ 函数), 919
pcnt_set_filter_value (C++ 函数), 921
pcnt_set_mode (C++ 函数), 922
pcnt_set_pin (C++ 函数), 920
PCNT_UNIT_0 (C++ 枚举子), 925
PCNT_UNIT_1 (C++ 枚举子), 926
PCNT_UNIT_2 (C++ 枚举子), 926
PCNT_UNIT_3 (C++ 枚举子), 926
PCNT_UNIT_4 (C++ 枚举子), 926
PCNT_UNIT_5 (C++ 枚举子), 926
PCNT_UNIT_6 (C++ 枚举子), 926
PCNT_UNIT_7 (C++ 枚举子), 926
pcnt_unit_config (C++ 函数), 917
PCNT_UNIT_MAX (C++ 枚举子), 926
pcnt_unit_t (C++ 类型), 925
pcQueueGetName (C++ 函数), 1364
pcTaskGetTaskName (C++ 函数), 1337
pcTimerGetTimerName (C++ 函数), 1415
PDM_PCM_CONV_DISABLE (C++ 枚举子), 868
PDM_PCM_CONV_ENABLE (C++ 枚举子), 868
pdm_pcm_conv_t (C++ 类型), 867
PDM_SAMPLE_RATE_RATIO_128 (C++ 枚举子), 867
PDM_SAMPLE_RATE_RATIO_64 (C++ 枚举子), 867
pdm_sample_rate_ratio_t (C++ 类型), 867
PendedFunction_t (C++ 类型), 1429
PHY0 (C++ 枚举子), 750
PHY1 (C++ 枚举子), 750
PHY10 (C++ 枚举子), 751
PHY11 (C++ 枚举子), 751
PHY12 (C++ 枚举子), 751
PHY13 (C++ 枚举子), 751
PHY14 (C++ 枚举子), 751
PHY15 (C++ 枚举子), 751
PHY16 (C++ 枚举子), 751
PHY17 (C++ 枚举子), 751
PHY18 (C++ 枚举子), 751
PHY19 (C++ 枚举子), 751
PHY2 (C++ 枚举子), 750
PHY20 (C++ 枚举子), 751
PHY21 (C++ 枚举子), 751
PHY22 (C++ 枚举子), 751
PHY23 (C++ 枚举子), 751
PHY24 (C++ 枚举子), 752
PHY25 (C++ 枚举子), 752
PHY26 (C++ 枚举子), 752
PHY27 (C++ 枚举子), 752
PHY28 (C++ 枚举子), 752
PHY29 (C++ 枚举子), 752
PHY3 (C++ 枚举子), 750
PHY30 (C++ 枚举子), 752
PHY31 (C++ 枚举子), 752
PHY4 (C++ 枚举子), 750
PHY5 (C++ 枚举子), 750
PHY6 (C++ 枚举子), 750
PHY7 (C++ 枚举子), 751
PHY8 (C++ 枚举子), 751
PHY9 (C++ 枚举子), 751
phy_ip101_check_phy_init (C++ 函数), 755
phy_ip101_default_ethernet_config (C++ 成员), 744
phy_ip101_dump_registers (C++ 函数), 755
phy_ip101_get_duplex_mode (C++ 函数), 755
phy_ip101_get_speed_mode (C++ 函数), 755
phy_ip101_init (C++ 函数), 755

phy_ip101_power_enable (C++ 函数), 755
phy_lan8720_check_phy_init (C++ 函数), 754
phy_lan8720_default_ethernet_config (C++ 成员), 744
phy_lan8720_dump_registers (C++ 函数), 754
phy_lan8720_get_duplex_mode (C++ 函数), 754
phy_lan8720_get_speed_mode (C++ 函数), 754
phy_lan8720_init (C++ 函数), 754
phy_lan8720_power_enable (C++ 函数), 754
phy_mii_check_link_status (C++ 函数), 753
phy_mii_enable_flow_ctrl (C++ 函数), 753
phy_mii_get_partner_pause_enable (C++ 函数), 753
phy_rmii_configure_data_interface_pins (C++ 函数), 752
phy_rmii_smi_configure_pins (C++ 函数), 752
phy_tlk110_check_phy_init (C++ 函数), 753
phy_tlk110_default_ethernet_config (C++ 成员), 744
phy_tlk110_dump_registers (C++ 函数), 753
phy_tlk110_get_duplex_mode (C++ 函数), 753
phy_tlk110_get_speed_mode (C++ 函数), 753
phy_tlk110_init (C++ 函数), 754
phy_tlk110_power_enable (C++ 函数), 754
protocomm_add_endpoint (C++ 函数), 1194
protocomm_ble_config_t (C++ 类), 1203
protocomm_ble_config_t::device_name (C++ 成员), 1204
protocomm_ble_config_t::nu_lookup (C++ 成员), 1204
protocomm_ble_config_t::nu_lookup_count (C++ 成员), 1204
protocomm_ble_config_t::service_uuid (C++ 成员), 1204
protocomm_ble_name_uuid_t (C++ 类型), 1204
protocomm_ble_start (C++ 函数), 1202
protocomm_ble_stop (C++ 函数), 1203
protocomm_delete (C++ 函数), 1194
protocomm_http_server_config_t (C++ 类), 1202
protocomm_http_server_config_t::port (C++ 成员), 1202
protocomm_http_server_config_t::stack_size (C++ 成员), 1202
protocomm_http_server_config_t::task_priority (C++ 成员), 1202
protocomm_httpd_config_data_t (C++ 类型), 1201
protocomm_httpd_config_data_t::config (C++ 成员), 1201
protocomm_httpd_config_data_t::handle (C++ 成员), 1201
protocomm_httpd_config_t (C++ 类), 1202
protocomm_httpd_config_t::data (C++ 成员), 1202
protocomm_httpd_config_t::ext_handle_provided (C++ 成员), 1202
PROTOCOMM_HTTPD_DEFAULT_CONFIG (C 宏), 1202
protocomm_httpd_start (C++ 函数), 1200
protocomm_httpd_stop (C++ 函数), 1201
protocomm_new (C++ 函数), 1194
protocomm_remove_endpoint (C++ 函数), 1195
protocomm_req_handle (C++ 函数), 1195
protocomm_req_handler_t (C++ 类型), 1198
protocomm_security (C++ 类), 1199
protocomm_security::cleanup (C++ 成员), 1199
protocomm_security::close_transport_session (C++ 成员), 1199
protocomm_security::decrypt (C++ 成员), 1200
protocomm_security::encrypt (C++ 成员), 1199
protocomm_security::init (C++ 成员), 1199
protocomm_security::new_transport_session (C++ 成员), 1199
protocomm_security::security_req_handler (C++ 成员), 1199
protocomm_security::ver (C++ 成员), 1199
protocomm_security_pop (C++ 类), 1199
protocomm_security_pop::data (C++ 成员), 1199
protocomm_security_pop::len (C++ 成员), 1199
protocomm_security_pop_t (C++ 类型), 1200
protocomm_security_t (C++ 类型), 1200
protocomm_set_security (C++ 函数), 1196
protocomm_set_version (C++ 函数), 1197
protocomm_t (C++ 类型), 1198
protocomm_unset_security (C++ 函数), 1197

protocomm_unset_version (C++ 函数), 1198
PROV_DATA_FLAGS_FLAG (C 宏), 394
PROV_DATA_IV_INDEX_FLAG (C 宏), 394
PROV_DATA_NET_IDX_FLAG (C 宏), 394
PROXY_FILTER_BLACKLIST (C++ 枚举子), 412
PROXY_FILTER_WHITELIST (C++ 枚举子), 412
PTHREAD_STACK_MIN (C 宏), 1591
pvTaskGetThreadLocalStoragePointer (C++ 函数), 1339
pvTimerGetTimerID (C++ 函数), 1411
pxTaskGetStackStart (C++ 函数), 1338

Q

QueueHandle_t (C++ 类型), 1385
QueueSetHandle_t (C++ 类型), 1385
QueueSetMemberHandle_t (C++ 类型), 1385

R

R0 (C 宏), 2036
R1 (C 宏), 2036
R2 (C 宏), 2036
R3 (C 宏), 2036
RINGBUF_TYPE_ALLOWSPLIT (C++ 枚举子), 1458
RINGBUF_TYPE_BYTEBUF (C++ 枚举子), 1458
RINGBUF_TYPE_NOSPLIT (C++ 枚举子), 1458
ringbuf_type_t (C++ 类型), 1458
RingbufHandle_t (C++ 类型), 1458
RMT_BASECLK_APB (C++ 枚举子), 950
RMT_BASECLK_MAX (C++ 枚举子), 950
RMT_BASECLK_REF (C++ 枚举子), 950
RMT_CARRIER_LEVEL_HIGH (C++ 枚举子), 951
RMT_CARRIER_LEVEL_LOW (C++ 枚举子), 951
RMT_CARRIER_LEVEL_MAX (C++ 枚举子), 951
rmt_carrier_level_t (C++ 类型), 951
RMT_CHANNEL_0 (C++ 枚举子), 949
RMT_CHANNEL_1 (C++ 枚举子), 949
RMT_CHANNEL_2 (C++ 枚举子), 949
RMT_CHANNEL_3 (C++ 枚举子), 949
RMT_CHANNEL_4 (C++ 枚举子), 949
RMT_CHANNEL_5 (C++ 枚举子), 950
RMT_CHANNEL_6 (C++ 枚举子), 950
RMT_CHANNEL_7 (C++ 枚举子), 950
RMT_CHANNEL_BUSY (C++ 枚举子), 951
RMT_CHANNEL_IDLE (C++ 枚举子), 951
RMT_CHANNEL_MAX (C++ 枚举子), 950
rmt_channel_status_result_t (C++ 类), 947
rmt_channel_status_result_t::status (C++ 成员), 947
rmt_channel_status_t (C++ 类型), 951
rmt_channel_t (C++ 类型), 949
RMT_CHANNEL_UNINIT (C++ 枚举子), 951
rmt_clr_intr_enable_mask (C++ 函数), 940
rmt_config (C++ 函数), 942
rmt_config_t (C++ 类), 948
rmt_config_t::channel (C++ 成员), 948
rmt_config_t::clk_div (C++ 成员), 948
rmt_config_t::gpio_num (C++ 成员), 948
rmt_config_t::mem_block_num (C++ 成员), 948
rmt_config_t::rmt_mode (C++ 成员), 948
rmt_config_t::rx_config (C++ 成员), 948
rmt_config_t::tx_config (C++ 成员), 948
RMT_DATA_MODE_FIFO (C++ 枚举子), 950
RMT_DATA_MODE_MAX (C++ 枚举子), 950
RMT_DATA_MODE_MEM (C++ 枚举子), 950
rmt_data_mode_t (C++ 类型), 950
rmt_driver_install (C++ 函数), 943
rmt_driver_uninstall (C++ 函数), 944
rmt_fill_tx_items (C++ 函数), 943
rmt_get_channel_status (C++ 函数), 944
rmt_get_clk_div (C++ 函数), 933
rmt_get_idle_level (C++ 函数), 939
rmt_get_mem_block_num (C++ 函数), 934
rmt_get_mem_pd (C++ 函数), 935
rmt_get_memory_owner (C++ 函数), 937
rmt_get_ringbuf_handle (C++ 函数), 945
rmt_get_rx_idle_thresh (C++ 函数), 933
rmt_get_source_clk (C++ 函数), 939
rmt_get_status (C++ 函数), 940
rmt_get_tx_loop_mode (C++ 函数), 938
RMT_IDLE_LEVEL_HIGH (C++ 枚举子), 951
RMT_IDLE_LEVEL_LOW (C++ 枚举子), 951
RMT_IDLE_LEVEL_MAX (C++ 枚举子), 951
rmt_idle_level_t (C++ 类型), 951
rmt_isr_deregister (C++ 函数), 943

rmt_isr_handle_t (C++ 类型), 949
rmt_isr_register (C++ 函数), 942
RMT_MEM_BLOCK_BYTE_NUM (C 宏), 948
RMT_MEM_ITEM_NUM (C 宏), 948
RMT_MEM_OWNER_MAX (C++ 枚举子), 950
RMT_MEM_OWNER_RX (C++ 枚举子), 950
rmt_mem_owner_t (C++ 类型), 950
RMT_MEM_OWNER_TX (C++ 枚举子), 950
rmt_memory_rw_rst (C++ 函数), 937
RMT_MODE_MAX (C++ 枚举子), 950
RMT_MODE_RX (C++ 枚举子), 950
rmt_mode_t (C++ 类型), 950
RMT_MODE_TX (C++ 枚举子), 950
rmt_register_tx_end_callback (C++ 函数), 946
rmt_rx_config_t (C++ 类), 947
rmt_rx_config_t::filter_en (C++ 成员), 947
rmt_rx_config_t::filter_ticks_thresh (C++ 成员), 947
rmt_rx_config_t::idle_threshold (C++ 成员), 947
rmt_rx_start (C++ 函数), 936
rmt_rx_stop (C++ 函数), 936
rmt_set_clk_div (C++ 函数), 932
rmt_set_err_intr_en (C++ 函数), 941
rmt_set_idle_level (C++ 函数), 939
rmt_set_intr_enable_mask (C++ 函数), 940
rmt_set_mem_block_num (C++ 函数), 934
rmt_set_mem_pd (C++ 函数), 935
rmt_set_memory_owner (C++ 函数), 937
rmt_set_pin (C++ 函数), 942
rmt_set_rx_filter (C++ 函数), 938
rmt_set_rx_idle_thresh (C++ 函数), 933
rmt_set_rx_intr_en (C++ 函数), 940
rmt_set_source_clk (C++ 函数), 938
rmt_set_tx_carrier (C++ 函数), 934
rmt_set_tx_intr_en (C++ 函数), 941
rmt_set_tx_loop_mode (C++ 函数), 937
rmt_set_tx_thr_intr_en (C++ 函数), 941
rmt_source_clk_t (C++ 类型), 950
rmt_translator_init (C++ 函数), 945
rmt_tx_config_t (C++ 类), 947
rmt_tx_config_t::carrier_duty_percent (C++ 成员), 947
rmt_tx_config_t::carrier_en (C++ 成员), 947
rmt_tx_config_t::carrier_freq_hz (C++ 成员), 947
rmt_tx_config_t::carrier_level (C++ 成员), 947
rmt_tx_config_t::idle_level (C++ 成员), 947
rmt_tx_config_t::idle_output_en (C++ 成员), 947
rmt_tx_config_t::loop_en (C++ 成员), 947
rmt_tx_end_callback_t (C++ 类), 948
rmt_tx_end_callback_t::arg (C++ 成员), 948
rmt_tx_end_callback_t::function (C++ 成员), 948
rmt_tx_end_fn_t (C++ 类型), 949
rmt_tx_start (C++ 函数), 936
rmt_tx_stop (C++ 函数), 936
rmt_wait_tx_done (C++ 函数), 945
rmt_write_items (C++ 函数), 944
rmt_write_sample (C++ 函数), 946
ROLE_FAST_PROV (C++ 枚举子), 412
ROLE_NODE (C++ 枚举子), 412
ROLE_PROVISIONER (C++ 枚举子), 412
rtc_gpio_deinit (C++ 函数), 830
rtc_gpio_force_hold_dis_all (C++ 函数), 833
rtc_gpio_get_drive_capability (C++ 函数), 833
rtc_gpio_get_level (C++ 函数), 830
rtc_gpio_hold_dis (C++ 函数), 832
rtc_gpio_hold_en (C++ 函数), 832
rtc_gpio_init (C++ 函数), 829
RTC_GPIO_IS_VALID_GPIO (C 宏), 834
rtc_gpio_is_valid_gpio (C++ 函数), 829
rtc_gpio_isolate (C++ 函数), 832
RTC_GPIO_MODE_DISABLED (C++ 枚举子), 834
RTC_GPIO_MODE_INPUT_ONLY (C++ 枚举子), 834
RTC_GPIO_MODE_INPUT_OUTPUT (C++ 枚举子), 834
RTC_GPIO_MODE_OUTPUT_ONLY (C++ 枚举子), 834
rtc_gpio_mode_t (C++ 类型), 834
rtc_gpio_pulldown_dis (C++ 函数), 832
rtc_gpio_pulldown_en (C++ 函数), 831
rtc_gpio_pullup_dis (C++ 函数), 831

rtc_gpio_pullup_en (C++ 函数), 831
rtc_gpio_set_direction (C++ 函数), 830
rtc_gpio_set_drive_capability (C++ 函数), 833
rtc_gpio_set_level (C++ 函数), 830
rtc_gpio_wakeup_disable (C++ 函数), 834
rtc_gpio_wakeup_enable (C++ 函数), 834
RTC_SLOW_MEM (C 宏), 2040

S

sample_to_rmt_t (C++ 类型), 949
sc_callback_t (C++ 类型), 686
SC_STATUS_FIND_CHANNEL (C++ 枚举子), 687
SC_STATUS_GETTING_SSID_PSWD (C++ 枚举子), 687
SC_STATUS_LINK (C++ 枚举子), 687
SC_STATUS_LINK_OVER (C++ 枚举子), 687
SC_STATUS_WAIT (C++ 枚举子), 687
SC_TYPE_AIRKISS (C++ 枚举子), 687
SC_TYPE_ESPTOUCH (C++ 枚举子), 687
SC_TYPE_ESPTOUCH_AIRKISS (C++ 枚举子), 687
sdio_event_cb_t (C++ 类型), 979
sdio_slave_buf_handle_t (C++ 类型), 979
sdio_slave_clear_host_int (C++ 函数), 977
sdio_slave_config_t (C++ 类), 977
sdio_slave_config_t::event_cb (C++ 成员), 978
sdio_slave_config_t::flags (C++ 成员), 978
sdio_slave_config_t::recv_buffer_size (C++ 成员), 978
sdio_slave_config_t::send_queue_size (C++ 成员), 978
sdio_slave_config_t::sending_mode (C++ 成员), 978
sdio_slave_config_t::timing (C++ 成员), 978
sdio_slave_deinit (C++ 函数), 973
SDIO_SLAVE_FLAG_DAT2_DISABLED (C 宏), 978
SDIO_SLAVE_FLAG_HOST_INTR_DISABLED (C 宏), 978
SDIO_SLAVE_FLAG_INTERNAL_PULLUP (C 宏), 978
sdio_slave_get_host_intena (C++ 函数), 976
SDIO_SLAVE_HOSTINT_BIT0 (C++ 枚举子), 979
SDIO_SLAVE_HOSTINT_BIT1 (C++ 枚举子), 979
SDIO_SLAVE_HOSTINT_BIT2 (C++ 枚举子), 979
SDIO_SLAVE_HOSTINT_BIT3 (C++ 枚举子), 979
SDIO_SLAVE_HOSTINT_BIT4 (C++ 枚举子), 979
SDIO_SLAVE_HOSTINT_BIT5 (C++ 枚举子), 979
SDIO_SLAVE_HOSTINT_BIT6 (C++ 枚举子), 979
SDIO_SLAVE_HOSTINT_BIT7 (C++ 枚举子), 979
SDIO_SLAVE_HOSTINT_RECV_OVF (C++ 枚举子), 979
SDIO_SLAVE_HOSTINT_SEND_NEW_PACKET (C++ 枚举子), 979
SDIO_SLAVE_HOSTINT_SEND_UDF (C++ 枚举子), 979
sdio_slave_hostint_t (C++ 类型), 979
sdio_slave_initialize (C++ 函数), 973
sdio_slave_read_reg (C++ 函数), 976
sdio_slave_recv (C++ 函数), 974
sdio_slave_recv_get_buf (C++ 函数), 975
sdio_slave_recv_load_buf (C++ 函数), 974
SDIO_SLAVE_RECV_MAX_BUFFER (C 宏), 978
sdio_slave_recv_register_buf (C++ 函数), 974
sdio_slave_recv_unregister_buf (C++ 函数), 974
sdio_slave_reset (C++ 函数), 973
sdio_slave_send_get_finished (C++ 函数), 975
sdio_slave_send_host_int (C++ 函数), 977
SDIO_SLAVE_SEND_PACKET (C++ 枚举子), 980
sdio_slave_send_queue (C++ 函数), 975
SDIO_SLAVE_SEND_STREAM (C++ 枚举子), 980
sdio_slave_sending_mode_t (C++ 类型), 980
sdio_slave_set_host_intena (C++ 函数), 977
sdio_slave_start (C++ 函数), 973
sdio_slave_stop (C++ 函数), 973
SDIO_SLAVE_TIMING_NSEND_NSAMPLE (C++ 枚举子), 980
SDIO_SLAVE_TIMING_NSEND_PSAMPLE (C++ 枚举子), 980
SDIO_SLAVE_TIMING_PSEND_NSAMPLE (C++ 枚举子), 980
SDIO_SLAVE_TIMING_PSEND_PSAMPLE (C++ 枚举子), 979
sdio_slave_timing_t (C++ 类型), 979
sdio_slave_transmit (C++ 函数), 976
sdio_slave_wait_int (C++ 函数), 977
sdio_slave_write_reg (C++ 函数), 976
sdmmc_card_init (C++ 函数), 1251
sdmmc_card_print_info (C++ 函数), 1252
sdmmc_card_t (C++ 类), 1259

sdmmc_card_t::cid (C++ 成员), 1259
sdmmc_card_t::csd (C++ 成员), 1260
sdmmc_card_t::ext_csd (C++ 成员), 1260
sdmmc_card_t::host (C++ 成员), 1259
sdmmc_card_t::is_ddr (C++ 成员), 1260
sdmmc_card_t::is_mem (C++ 成员), 1260
sdmmc_card_t::is_mmc (C++ 成员), 1260
sdmmc_card_t::is_sdio (C++ 成员), 1260
sdmmc_card_t::log_bus_width (C++ 成员), 1260
sdmmc_card_t::max_freq_khz (C++ 成员), 1260
sdmmc_card_t::num_io_functions (C++ 成员), 1260
sdmmc_card_t::ocr (C++ 成员), 1259
sdmmc_card_t::rca (C++ 成员), 1260
sdmmc_card_t::reserved (C++ 成员), 1260
sdmmc_card_t::scr (C++ 成员), 1260
sdmmc_cid_t (C++ 类), 1256
sdmmc_cid_t::date (C++ 成员), 1257
sdmmc_cid_t::mfg_id (C++ 成员), 1257
sdmmc_cid_t::name (C++ 成员), 1257
sdmmc_cid_t::oem_id (C++ 成员), 1257
sdmmc_cid_t::revision (C++ 成员), 1257
sdmmc_cid_t::serial (C++ 成员), 1257
sdmmc_command_t (C++ 类), 1258
sdmmc_command_t::arg (C++ 成员), 1258
sdmmc_command_t::blklen (C++ 成员), 1258
sdmmc_command_t::data (C++ 成员), 1258
sdmmc_command_t::datalen (C++ 成员), 1258
sdmmc_command_t::error (C++ 成员), 1258
sdmmc_command_t::flags (C++ 成员), 1258
sdmmc_command_t::opcode (C++ 成员), 1258
sdmmc_command_t::response (C++ 成员), 1258
sdmmc_command_t::timeout_ms (C++ 成员), 1258
sdmmc_csd_t (C++ 类), 1256
sdmmc_csd_t::capacity (C++ 成员), 1256
sdmmc_csd_t::card_command_class (C++ 成员), 1256
sdmmc_csd_t::csd_ver (C++ 成员), 1256
sdmmc_csd_t::mmc_ver (C++ 成员), 1256
sdmmc_csd_t::read_block_len (C++ 成员), 1256
sdmmc_csd_t::sector_size (C++ 成员), 1256
sdmmc_csd_t::tr_speed (C++ 成员), 1256
sdmmc_ext_csd_t (C++ 类), 1257
sdmmc_ext_csd_t::power_class (C++ 成员), 1257
SDMMC_FREQ_26M (C 宏), 1261
SDMMC_FREQ_52M (C 宏), 1261
SDMMC_FREQ_DEFAULT (C 宏), 1261
SDMMC_FREQ_HIGHSPEED (C 宏), 1261
SDMMC_FREQ_PROBING (C 宏), 1261
SDMMC_HOST_DEFAULT (C 宏), 957
sdmmc_host_deinit (C++ 函数), 956
sdmmc_host_do_transaction (C++ 函数), 955
SDMMC_HOST_FLAG_1BIT (C 宏), 1260
SDMMC_HOST_FLAG_4BIT (C 宏), 1260
SDMMC_HOST_FLAG_8BIT (C 宏), 1260
SDMMC_HOST_FLAG_DDR (C 宏), 1261
SDMMC_HOST_FLAG_SPI (C 宏), 1260
sdmmc_host_get_slot_width (C++ 函数), 954
sdmmc_host_init (C++ 函数), 953
sdmmc_host_init_slot (C++ 函数), 954
sdmmc_host_io_int_enable (C++ 函数), 956
sdmmc_host_io_int_wait (C++ 函数), 956
sdmmc_host_pullup_en (C++ 函数), 956
sdmmc_host_set_bus_ddr_mode (C++ 函数), 955
sdmmc_host_set_bus_width (C++ 函数), 954
sdmmc_host_set_card_clk (C++ 函数), 955
SDMMC_HOST_SLOT_0 (C 宏), 957
SDMMC_HOST_SLOT_1 (C 宏), 957
sdmmc_host_t (C++ 类), 1258
sdmmc_host_t::command_timeout_ms (C++ 成员), 1259
sdmmc_host_t::deinit (C++ 成员), 1259
sdmmc_host_t::do_transaction (C++ 成员), 1259
sdmmc_host_t::flags (C++ 成员), 1258
sdmmc_host_t::get_bus_width (C++ 成员), 1259
sdmmc_host_t::init (C++ 成员), 1259
sdmmc_host_t::io_int_enable (C++ 成员), 1259
sdmmc_host_t::io_int_wait (C++ 成员), 1259
sdmmc_host_t::io_voltage (C++ 成员), 1259
sdmmc_host_t::max_freq_khz (C++ 成员), 1259
sdmmc_host_t::set_bus_ddr_mode (C++ 成员), 1259
sdmmc_host_t::set_bus_width (C++ 成员), 1259
sdmmc_host_t::set_card_clk (C++ 成员), 1259

sdmmc_host_t::slot (C++ 成员), 1258
sdmmc_io_enable_int (C++ 函数), 1255
sdmmc_io_read_blocks (C++ 函数), 1254
sdmmc_io_read_byte (C++ 函数), 1252
sdmmc_io_read_bytes (C++ 函数), 1253
sdmmc_io_wait_int (C++ 函数), 1255
sdmmc_io_write_blocks (C++ 函数), 1255
sdmmc_io_write_byte (C++ 函数), 1253
sdmmc_io_write_bytes (C++ 函数), 1254
sdmmc_read_sectors (C++ 函数), 1252
sdmmc_response_t (C++ 类型), 1261
sdmmc_scr_t (C++ 类), 1257
sdmmc_scr_t::bus_width (C++ 成员), 1257
sdmmc_scr_t::sd_spec (C++ 成员), 1257
SDMMC_SLOT_CONFIG_DEFAULT (C 宏), 958
sdmmc_slot_config_t (C++ 类), 957
sdmmc_slot_config_t::flags (C++ 成员), 957
sdmmc_slot_config_t::gpio_cd (C++ 成员), 957
sdmmc_slot_config_t::gpio_wp (C++ 成员), 957
sdmmc_slot_config_t::width (C++ 成员), 957
SDMMC_SLOT_FLAG_INTERNAL_PULLUP (C 宏), 958
SDMMC_SLOT_NO_CD (C 宏), 958
SDMMC_SLOT_NO_WP (C 宏), 958
SDMMC_SLOT_WIDTH_DEFAULT (C 宏), 958
sdmmc_switch_func_rsp_t (C++ 类), 1257
sdmmc_switch_func_rsp_t::data (C++ 成员), 1258
sdmmc_write_sectors (C++ 函数), 1252
SDSPI_HOST_DEFAULT (C 宏), 961
sdspi_host_deinit (C++ 函数), 960
sdspi_host_do_transaction (C++ 函数), 959
sdspi_host_init (C++ 函数), 959
sdspi_host_init_slot (C++ 函数), 959
sdspi_host_set_card_clk (C++ 函数), 960
SDSPI_SLOT_CONFIG_DEFAULT (C 宏), 961
sdspi_slot_config_t (C++ 类), 960
sdspi_slot_config_t::dma_channel (C++ 成员), 961
sdspi_slot_config_t::gpio_cd (C++ 成员), 961
sdspi_slot_config_t::gpio_cs (C++ 成员), 961
sdspi_slot_config_t::gpio_miso (C++ 成员), 961
sdspi_slot_config_t::gpio_mosi (C++ 成员), 961
sdspi_slot_config_t::gpio_sck (C++ 成员), 961
sdspi_slot_config_t::gpio_wp (C++ 成员), 961
SDSPI_SLOT_NO_CD (C 宏), 961
SDSPI_SLOT_NO_WP (C 宏), 961
SemaphoreHandle_t (C++ 类型), 1404
semBINARY_SEMAPHORE_QUEUE_LENGTH (C 宏), 1386
semGIVE_BLOCK_TIME (C 宏), 1386
semSEMAPHORE_QUEUE_ITEM_LENGTH (C 宏), 1386
shutdown_handler_t (C++ 类型), 1602
SIGMADELTA_CHANNEL_0 (C++ 枚举子), 983
SIGMADELTA_CHANNEL_1 (C++ 枚举子), 983
SIGMADELTA_CHANNEL_2 (C++ 枚举子), 983
SIGMADELTA_CHANNEL_3 (C++ 枚举子), 983
SIGMADELTA_CHANNEL_4 (C++ 枚举子), 983
SIGMADELTA_CHANNEL_5 (C++ 枚举子), 983
SIGMADELTA_CHANNEL_6 (C++ 枚举子), 983
SIGMADELTA_CHANNEL_7 (C++ 枚举子), 983
SIGMADELTA_CHANNEL_MAX (C++ 枚举子), 983
sigmadelta_channel_t (C++ 类型), 983
sigmadelta_config (C++ 函数), 981
sigmadelta_config_t (C++ 类), 982
sigmadelta_config_t::channel (C++ 成员), 982
sigmadelta_config_t::sigmadelta_duty (C++ 成员), 982
sigmadelta_config_t::sigmadelta_gpio (C++ 成员), 982
sigmadelta_config_t::sigmadelta_prescale (C++ 成员), 982
sigmadelta_set_duty (C++ 函数), 981
sigmadelta_set_pin (C++ 函数), 982
sigmadelta_set_prescale (C++ 函数), 982
slave_transaction_cb_t (C++ 类型), 1021
smartconfig_status_t (C++ 类型), 687
smartconfig_type_t (C++ 类型), 687
soc_has_cache_lock_bug (C++ 函数), 1601
spi_bus_add_device (C++ 函数), 1003
spi_bus_config_t (C++ 类), 999
spi_bus_config_t::flags (C++ 成员), 1000
spi_bus_config_t::intr_flags (C++ 成员), 1000
spi_bus_config_t::max_transfer_sz (C++ 成

员), 1000
spi_bus_config_t::miso_io_num (C++ 成员), 999
spi_bus_config_t::mosi_io_num (C++ 成员), 999
spi_bus_config_t::quadhd_io_num (C++ 成员), 999
spi_bus_config_t::quadwp_io_num (C++ 成员), 999
spi_bus_config_t::sclk_io_num (C++ 成员), 999
spi_bus_free (C++ 函数), 1003
spi_bus_initialize (C++ 函数), 1002
spi_bus_remove_device (C++ 函数), 1003
spi_cal_clock (C++ 函数), 1007
SPI_DEVICE_3WIRE (C 宏), 1012
spi_device_acquire_bus (C++ 函数), 1006
SPI_DEVICE_BIT_LSBFIRST (C 宏), 1012
SPI_DEVICE_CLK_AS_CS (C 宏), 1012
spi_device_get_trans_result (C++ 函数), 1004
SPI_DEVICE_HALFDUPLEX (C 宏), 1012
spi_device_handle_t (C++ 类型), 1013
spi_device_interface_config_t (C++ 类), 1008
spi_device_interface_config_t::address_bits (C++ 成员), 1008
spi_device_interface_config_t::clock_speed_hz (C++ 成员), 1009
spi_device_interface_config_t::command_bits (C++ 成员), 1008
spi_device_interface_config_t::cs_ena_posttrans (C++ 成员), 1009
spi_device_interface_config_t::cs_ena_pretrans (C++ 成员), 1009
spi_device_interface_config_t::dummy_bits (C++ 成员), 1008
spi_device_interface_config_t::duty_cycle_pos (C++ 成员), 1008
spi_device_interface_config_t::flags (C++ 成员), 1009
spi_device_interface_config_t::input_delay_ns (C++ 成员), 1009
spi_device_interface_config_t::mode (C++ 成员), 1008
spi_device_interface_config_t::post_cb (C++ 成员), 1009
spi_device_interface_config_t::pre_cb (C++ 成员), 1009
spi_device_interface_config_t::queue_size (C++ 成员), 1009
spi_device_interface_config_t::spics_io_num (C++ 成员), 1009
SPI_DEVICE_NO_DUMMY (C 宏), 1012
spi_device_polling_end (C++ 函数), 1006
spi_device_polling_start (C++ 函数), 1005
spi_device_polling_transmit (C++ 函数), 1006
SPI_DEVICE_POSITIVE_CS (C 宏), 1012
spi_device_queue_trans (C++ 函数), 1004
spi_device_release_bus (C++ 函数), 1007
SPI_DEVICE_RXBIT_LSBFIRST (C 宏), 1011
spi_device_transmit (C++ 函数), 1005
SPI_DEVICE_TXBIT_LSBFIRST (C 宏), 1011
spi_flash_cache2phys (C++ 函数), 1236
SPI_FLASH_CACHE2PHYS_FAIL (C 宏), 1239
spi_flash_cache_enabled (C++ 函数), 1237
spi_flash_erase_range (C++ 函数), 1233
spi_flash_erase_sector (C++ 函数), 1233
spi_flash_get_chip_size (C++ 函数), 1233
spi_flash_guard_end_func_t (C++ 类型), 1239
spi_flash_guard_funcs_t (C++ 类), 1238
spi_flash_guard_funcs_t::end (C++ 成员), 1239
spi_flash_guard_funcs_t::is_safe_write_address (C++ 成员), 1239
spi_flash_guard_funcs_t::op_lock (C++ 成员), 1239
spi_flash_guard_funcs_t::op_unlock (C++ 成员), 1239
spi_flash_guard_funcs_t::start (C++ 成员), 1239
spi_flash_guard_funcs_t::yield (C++ 成员), 1239
spi_flash_guard_get (C++ 函数), 1238
spi_flash_guard_set (C++ 函数), 1237
spi_flash_guard_start_func_t (C++ 类型), 1239
spi_flash_init (C++ 函数), 1232
spi_flash_is_safe_write_address_t (C++ 类型), 1240
spi_flash_mmap (C++ 函数), 1235

SPI_FLASH_MMAP_DATA (C++ 枚举子), 1240
spi_flash_mmap_dump (C++ 函数), 1236
spi_flash_mmap_get_free_pages (C++ 函数), 1236
spi_flash_mmap_handle_t (C++ 类型), 1239
SPI_FLASH_MMAP_INST (C++ 枚举子), 1240
spi_flash_mmap_memory_t (C++ 类型), 1240
spi_flash_mmap_pages (C++ 函数), 1235
SPI_FLASH_MMU_PAGE_SIZE (C 宏), 1239
spi_flash_munmap (C++ 函数), 1236
spi_flash_op_lock_func_t (C++ 类型), 1239
spi_flash_op_unlock_func_t (C++ 类型), 1239
spi_flash_os_yield_t (C++ 类型), 1240
spi_flash_phys2cache (C++ 函数), 1237
spi_flash_read (C++ 函数), 1234
spi_flash_read_encrypted (C++ 函数), 1234
SPI_FLASH_SEC_SIZE (C 宏), 1239
spi_flash_write (C++ 函数), 1233
spi_flash_write_encrypted (C++ 函数), 1233
spi_get_freq_limit (C++ 函数), 1008
spi_get_timing (C++ 函数), 1007
SPI_HOST (C++ 枚举子), 1002
spi_host_device_t (C++ 类型), 1001
SPI_MASTER_FREQ_10M (C 宏), 1011
SPI_MASTER_FREQ_11M (C 宏), 1011
SPI_MASTER_FREQ_13M (C 宏), 1011
SPI_MASTER_FREQ_16M (C 宏), 1011
SPI_MASTER_FREQ_20M (C 宏), 1011
SPI_MASTER_FREQ_26M (C 宏), 1011
SPI_MASTER_FREQ_40M (C 宏), 1011
SPI_MASTER_FREQ_80M (C 宏), 1011
SPI_MASTER_FREQ_8M (C 宏), 1011
SPI_MASTER_FREQ_9M (C 宏), 1011
SPI_MAX_DMA_LEN (C 宏), 1000
SPI_SLAVE_BIT_LSBFIRST (C 宏), 1021
spi_slave_free (C++ 函数), 1018
spi_slave_get_trans_result (C++ 函数), 1019
spi_slave_initialize (C++ 函数), 1017
spi_slave_interface_config_t (C++ 类), 1020
spi_slave_interface_config_t::flags (C++ 成员), 1020
spi_slave_interface_config_t::mode (C++ 成员), 1020
spi_slave_interface_config_t::post_setup_cb (C++ 成员), 1020
spi_slave_interface_config_t::post_trans_cb (C++ 成员), 1020
spi_slave_interface_config_t::queue_size (C++ 成员), 1020
spi_slave_interface_config_t::spics_io_num (C++ 成员), 1020
spi_slave_queue_trans (C++ 函数), 1018
SPI_SLAVE_RXBIT_LSBFIRST (C 宏), 1021
spi_slave_transaction_t (C++ 类), 1021
spi_slave_transaction_t (C++ 类型), 1021
spi_slave_transaction_t::length (C++ 成员), 1021
spi_slave_transaction_t::rx_buffer (C++ 成员), 1021
spi_slave_transaction_t::trans_len (C++ 成员), 1021
spi_slave_transaction_t::tx_buffer (C++ 成员), 1021
spi_slave_transaction_t::user (C++ 成员), 1021
spi_slave_transmit (C++ 函数), 1019
SPI_SLAVE_TXBIT_LSBFIRST (C 宏), 1021
SPI_SWAP_DATA_RX (C 宏), 1000
SPI_SWAP_DATA_TX (C 宏), 1000
SPI_TRANS_MODE_DIO (C 宏), 1012
SPI_TRANS_MODE_DIOQIO_ADDR (C 宏), 1012
SPI_TRANS_MODE_QIO (C 宏), 1012
SPI_TRANS_USE_RXDATA (C 宏), 1012
SPI_TRANS_USE_TXDATA (C 宏), 1012
SPI_TRANS_VARIABLE_ADDR (C 宏), 1012
SPI_TRANS_VARIABLE_CMD (C 宏), 1012
spi_transaction_ext_t (C++ 类), 1010
spi_transaction_ext_t::address_bits (C++ 成员), 1011
spi_transaction_ext_t::base (C++ 成员), 1011
spi_transaction_ext_t::command_bits (C++ 成员), 1011
spi_transaction_t (C++ 类), 1009

spi_transaction_t (C++ 类型), 1013
spi_transaction_t::addr (C++ 成员), 1010
spi_transaction_t::cmd (C++ 成员), 1010
spi_transaction_t::flags (C++ 成员), 1010
spi_transaction_t::length (C++ 成员), 1010
spi_transaction_t::rx_buffer (C++ 成员), 1010
spi_transaction_t::rx_data (C++ 成员), 1010
spi_transaction_t::rxlength (C++ 成员), 1010
spi_transaction_t::tx_buffer (C++ 成员), 1010
spi_transaction_t::tx_data (C++ 成员), 1010
spi_transaction_t::user (C++ 成员), 1010
spicommon_bus_free_io (C++ 函数), 996
spicommon_bus_free_io_cfg (C++ 函数), 996
spicommon_bus_initialize_io (C++ 函数), 995
SPICOMMON_BUSFLAG_DUAL (C 宏), 1001
SPICOMMON_BUSFLAG_MASTER (C 宏), 1001
SPICOMMON_BUSFLAG_MISO (C 宏), 1001
SPICOMMON_BUSFLAG_MOSI (C 宏), 1001
SPICOMMON_BUSFLAG_NATIVE_PINS (C 宏), 1001
SPICOMMON_BUSFLAG_QUAD (C 宏), 1001
SPICOMMON_BUSFLAG_SCLK (C 宏), 1001
SPICOMMON_BUSFLAG_SLAVE (C 宏), 1001
SPICOMMON_BUSFLAG_WPHD (C 宏), 1001
spicommon_cs_free (C++ 函数), 997
spicommon_cs_free_io (C++ 函数), 997
spicommon_cs_initialize (C++ 函数), 997
spicommon_dma_chan_claim (C++ 函数), 995
spicommon_dma_chan_free (C++ 函数), 995
spicommon_dma_chan_in_use (C++ 函数), 995
spicommon_dmaworkaround_idle (C++ 函数), 999
spicommon_dmaworkaround_req_reset (C++ 函数), 998
spicommon_dmaworkaround_reset_in_progress (C++ 函数), 999
spicommon_dmaworkaround_transfer_active (C++ 函数), 999
spicommon_hw_for_host (C++ 函数), 998
spicommon_irqsource_for_host (C++ 函数), 998
spicommon_periph_claim (C 宏), 1001
spicommon_periph_claim (C++ 函数), 994
spicommon_periph_free (C++ 函数), 994
spicommon_periph_in_use (C++ 函数), 994
spicommon_setup_dma_desc_links (C++ 函数), 997
system_deep_sleep (C++ 函数), 1569

T

taskDISABLE_INTERRUPTS (C 宏), 1353
taskENABLE_INTERRUPTS (C 宏), 1353
taskENTER_CRITICAL (C 宏), 1352
taskENTER_CRITICAL_ISR (C 宏), 1352
taskEXIT_CRITICAL (C 宏), 1352
taskEXIT_CRITICAL_ISR (C 宏), 1353
TaskHandle_t (C++ 类型), 1354
TaskHookFunction_t (C++ 类型), 1354
taskSCHEDULER_NOT_STARTED (C 宏), 1353
taskSCHEDULER_RUNNING (C 宏), 1353
taskSCHEDULER_SUSPENDED (C 宏), 1353
TaskSnapshot_t (C++ 类型), 1354
TaskStatus_t (C++ 类型), 1354
taskYIELD (C 宏), 1352
tcpip_adapter_ap_input (C++ 函数), 766
tcpip_adapter_ap_start (C++ 函数), 757
tcpip_adapter_create_ip6_linklocal (C++ 函数), 762
TCPIP_ADAPTER_DHCP_INIT (C++ 枚举子), 770
tcpip_adapter_dhcp_option_id_t (C++ 类型), 771
tcpip_adapter_dhcp_option_mode_t (C++ 类型), 771
TCPIP_ADAPTER_DHCP_STARTED (C++ 枚举子), 770
TCPIP_ADAPTER_DHCP_STATUS_MAX (C++ 枚举子), 770
tcpip_adapter_dhcp_status_t (C++ 类型), 770
TCPIP_ADAPTER_DHCP_STOPPED (C++ 枚举子), 770
tcpip_adapter_dhcpc_get_status (C++ 函数), 764
tcpip_adapter_dhcpc_option (C++ 函数), 764
tcpip_adapter_dhcpc_start (C++ 函数), 765
tcpip_adapter_dhcpc_stop (C++ 函数), 765
tcpip_adapter_dhcps_get_status (C++ 函数), 763
tcpip_adapter_dhcps_option (C++ 函数), 763
tcpip_adapter_dhcps_start (C++ 函数), 764

tcpip_adapter_dhcps_stop (C++ 函数), 764
TCPIP_ADAPTER_DNS_BACKUP (C++ 枚举子), 770
TCPIP_ADAPTER_DNS_FALLBACK (C++ 枚举子), 770
tcpip_adapter_dns_info_t (C++ 类), 769
tcpip_adapter_dns_info_t::ip (C++ 成员), 769
TCPIP_ADAPTER_DNS_MAIN (C++ 枚举子), 770
TCPIP_ADAPTER_DNS_MAX (C++ 枚举子), 770
tcpip_adapter_dns_type_t (C++ 类型), 770
TCPIP_ADAPTER_DOMAIN_NAME_SERVER (C++ 枚举子), 771
tcpip_adapter_down (C++ 函数), 758
tcpip_adapter_eth_input (C++ 函数), 766
tcpip_adapter_eth_start (C++ 函数), 756
tcpip_adapter_get_dns_info (C++ 函数), 760
tcpip_adapter_get_esp_if (C++ 函数), 767
tcpip_adapter_get_hostname (C++ 函数), 768
tcpip_adapter_get_ip6_global (C++ 函数), 763
tcpip_adapter_get_ip6_linklocal (C++ 函数), 762
tcpip_adapter_get_ip_info (C++ 函数), 759
tcpip_adapter_get_netif (C++ 函数), 768
tcpip_adapter_get_old_ip_info (C++ 函数), 761
tcpip_adapter_get_sta_list (C++ 函数), 767
TCPIP_ADAPTER_IF_AP (C++ 枚举子), 770
TCPIP_ADAPTER_IF_ETH (C++ 枚举子), 770
TCPIP_ADAPTER_IF_MAX (C++ 枚举子), 770
TCPIP_ADAPTER_IF_STA (C++ 枚举子), 770
tcpip_adapter_if_t (C++ 类型), 770
tcpip_adapter_init (C++ 函数), 756
TCPIP_ADAPTER_IP_ADDRESS_LEASE_TIME (C++ 枚举子), 771
TCPIP_ADAPTER_IP_REQUEST_RETRY_TIME (C++ 枚举子), 771
tcpip_adapter_is_netif_up (C++ 函数), 769
TCPIP_ADAPTER_OP_GET (C++ 枚举子), 771
TCPIP_ADAPTER_OP_MAX (C++ 枚举子), 771
TCPIP_ADAPTER_OP_SET (C++ 枚举子), 771
TCPIP_ADAPTER_OP_START (C++ 枚举子), 771
tcpip_adapter_option_id_t (C++ 类型), 770
tcpip_adapter_option_mode_t (C++ 类型), 770
TCPIP_ADAPTER_REQUESTED_IP_ADDRESS (C++ 枚举子), 771
TCPIP_ADAPTER_ROUTER_SOLICITATION_ADDRESS (C++ 枚举子), 771
tcpip_adapter_set_dns_info (C++ 函数), 760
tcpip_adapter_set_hostname (C++ 函数), 768
tcpip_adapter_set_ip_info (C++ 函数), 759
tcpip_adapter_set_old_ip_info (C++ 函数), 761
tcpip_adapter_sta_input (C++ 函数), 766
tcpip_adapter_sta_start (C++ 函数), 757
tcpip_adapter_stop (C++ 函数), 757
tcpip_adapter_up (C++ 函数), 758
TCPIP_HOSTNAME_MAX_SIZE (C 宏), 769
TIMER_0 (C++ 枚举子), 1031
TIMER_1 (C++ 枚举子), 1031
TIMER_ALARM_DIS (C++ 枚举子), 1032
TIMER_ALARM_EN (C++ 枚举子), 1032
TIMER_ALARM_MAX (C++ 枚举子), 1032
timer_alarm_t (C++ 类型), 1032
TIMER_AUTORELOAD_DIS (C++ 枚举子), 1032
TIMER_AUTORELOAD_EN (C++ 枚举子), 1032
TIMER_AUTORELOAD_MAX (C++ 枚举子), 1032
timer_autoreload_t (C++ 类型), 1032
TIMER_BASE_CLK (C 宏), 1031
timer_config_t (C++ 类), 1030
timer_config_t::alarm_en (C++ 成员), 1030
timer_config_t::auto_reload (C++ 成员), 1030
timer_config_t::counter_dir (C++ 成员), 1030
timer_config_t::counter_en (C++ 成员), 1030
timer_config_t::divider (C++ 成员), 1030
timer_config_t::intr_type (C++ 成员), 1030
timer_count_dir_t (C++ 类型), 1031
TIMER_COUNT_DOWN (C++ 枚举子), 1031
TIMER_COUNT_MAX (C++ 枚举子), 1032
TIMER_COUNT_UP (C++ 枚举子), 1031
timer_disable_intr (C++ 函数), 1030
timer_enable_intr (C++ 函数), 1029
timer_get_alarm_value (C++ 函数), 1027
timer_get_config (C++ 函数), 1029
timer_get_counter_time_sec (C++ 函数), 1025
timer_get_counter_value (C++ 函数), 1024
TIMER_GROUP_0 (C++ 枚举子), 1031
TIMER_GROUP_1 (C++ 枚举子), 1031
timer_group_intr_disable (C++ 函数), 1029

timer_group_intr_enable (C++ 函数), 1029
TIMER_GROUP_MAX (C++ 枚举子), 1031
timer_group_t (C++ 类型), 1031
timer_idx_t (C++ 类型), 1031
timer_init (C++ 函数), 1028
TIMER_INTR_LEVEL (C++ 枚举子), 1032
TIMER_INTR_MAX (C++ 枚举子), 1032
timer_intr_mode_t (C++ 类型), 1032
timer_isr_handle_t (C++ 类型), 1031
timer_isr_register (C++ 函数), 1028
TIMER_MAX (C++ 枚举子), 1031
timer_pause (C++ 函数), 1025
TIMER_PAUSE (C++ 枚举子), 1032
timer_set_alarm (C++ 函数), 1027
timer_set_alarm_value (C++ 函数), 1027
timer_set_auto_reload (C++ 函数), 1026
timer_set_counter_mode (C++ 函数), 1026
timer_set_counter_value (C++ 函数), 1025
timer_set_divider (C++ 函数), 1026
timer_start (C++ 函数), 1025
TIMER_START (C++ 枚举子), 1032
timer_start_t (C++ 类型), 1032
TimerCallbackFunction_t (C++ 类型), 1429
TimerHandle_t (C++ 类型), 1429
tls_keep_alive_cfg (C++ 类), 1102
tls_keep_alive_cfg::keep_alive_count (C++ 成员), 1102
tls_keep_alive_cfg::keep_alive_enable (C++ 成员), 1102
tls_keep_alive_cfg::keep_alive_idle (C++ 成员), 1102
tls_keep_alive_cfg::keep_alive_interval (C++ 成员), 1102
tls_keep_alive_cfg_t (C++ 类型), 1104
TlsDeleteCallbackFunction_t (C++ 类型), 1354
tmrCOMMAND_CHANGE_PERIOD (C 宏), 1415
tmrCOMMAND_CHANGE_PERIOD_FROM_ISR (C 宏), 1415
tmrCOMMAND_DELETE (C 宏), 1415
tmrCOMMAND_EXECUTE_CALLBACK (C 宏), 1415
tmrCOMMAND_EXECUTE_CALLBACK_FROM_ISR (C 宏), 1415
tmrCOMMAND_RESET (C 宏), 1415
tmrCOMMAND_RESET_FROM_ISR (C 宏), 1415
tmrCOMMAND_START (C 宏), 1415
tmrCOMMAND_START_DONT_TRACE (C 宏), 1415
tmrCOMMAND_START_FROM_ISR (C 宏), 1415
tmrCOMMAND_STOP (C 宏), 1415
tmrCOMMAND_STOP_FROM_ISR (C 宏), 1415
tmrFIRST_FROM_ISR_COMMAND (C 宏), 1415
touch_cnt_slope_t (C++ 类型), 1051
TOUCH_FSM_MODE_DEFAULT (C 宏), 1048
TOUCH_FSM_MODE_MAX (C++ 枚举子), 1052
TOUCH_FSM_MODE_SW (C++ 枚举子), 1052
touch_fsm_mode_t (C++ 类型), 1052
TOUCH_FSM_MODE_TIMER (C++ 枚举子), 1052
touch_high_volt_t (C++ 类型), 1050
TOUCH_HVOLT_2V4 (C++ 枚举子), 1050
TOUCH_HVOLT_2V5 (C++ 枚举子), 1050
TOUCH_HVOLT_2V6 (C++ 枚举子), 1050
TOUCH_HVOLT_2V7 (C++ 枚举子), 1050
TOUCH_HVOLT_ATTEN_0V (C++ 枚举子), 1051
TOUCH_HVOLT_ATTEN_0V5 (C++ 枚举子), 1051
TOUCH_HVOLT_ATTEN_1V (C++ 枚举子), 1051
TOUCH_HVOLT_ATTEN_1V5 (C++ 枚举子), 1050
TOUCH_HVOLT_ATTEN_KEEP (C++ 枚举子), 1050
TOUCH_HVOLT_ATTEN_MAX (C++ 枚举子), 1051
TOUCH_HVOLT_KEEP (C++ 枚举子), 1050
TOUCH_HVOLT_MAX (C++ 枚举子), 1050
touch_isr_handle_t (C++ 类型), 1049
touch_low_volt_t (C++ 类型), 1050
TOUCH_LVOLT_0V5 (C++ 枚举子), 1050
TOUCH_LVOLT_0V6 (C++ 枚举子), 1050
TOUCH_LVOLT_0V7 (C++ 枚举子), 1050
TOUCH_LVOLT_0V8 (C++ 枚举子), 1050
TOUCH_LVOLT_KEEP (C++ 枚举子), 1050
TOUCH_LVOLT_MAX (C++ 枚举子), 1050
TOUCH_PAD_BIT_MASK_MAX (C 宏), 1048
touch_pad_clear_group_mask (C++ 函数), 1045
touch_pad_clear_status (C++ 函数), 1046
touch_pad_config (C++ 函数), 1037
touch_pad_deinit (C++ 函数), 1037
touch_pad_filter_delete (C++ 函数), 1048
touch_pad_filter_start (C++ 函数), 1047
touch_pad_filter_stop (C++ 函数), 1047

touch_pad_get_cnt_mode (C++ 函数), 1042
touch_pad_get_filter_period (C++ 函数), 1047
touch_pad_get_fsm_mode (C++ 函数), 1043
touch_pad_get_group_mask (C++ 函数), 1045
touch_pad_get_meas_time (C++ 函数), 1041
touch_pad_get_status (C++ 函数), 1046
touch_pad_get_thresh (C++ 函数), 1043
touch_pad_get_trigger_mode (C++ 函数), 1044
touch_pad_get_trigger_source (C++ 函数), 1045
touch_pad_get_voltage (C++ 函数), 1041
touch_pad_get_wakeup_status (C++ 函数), 1048
TOUCH_PAD_GPIO0_CHANNEL (C 宏), 1052
TOUCH_PAD_GPIO12_CHANNEL (C 宏), 1053
TOUCH_PAD_GPIO13_CHANNEL (C 宏), 1053
TOUCH_PAD_GPIO14_CHANNEL (C 宏), 1053
TOUCH_PAD_GPIO15_CHANNEL (C 宏), 1053
TOUCH_PAD_GPIO27_CHANNEL (C 宏), 1053
TOUCH_PAD_GPIO2_CHANNEL (C 宏), 1053
TOUCH_PAD_GPIO32_CHANNEL (C 宏), 1053
TOUCH_PAD_GPIO33_CHANNEL (C 宏), 1053
TOUCH_PAD_GPIO4_CHANNEL (C 宏), 1052
touch_pad_init (C++ 函数), 1037
touch_pad_intr_disable (C++ 函数), 1046
touch_pad_intr_enable (C++ 函数), 1046
touch_pad_io_init (C++ 函数), 1042
touch_pad_isr_deregister (C++ 函数), 1040
touch_pad_isr_handler_register (C++ 函数), 1039
touch_pad_isr_register (C++ 函数), 1040
TOUCH_PAD_MAX (C++ 枚举子), 1050
TOUCH_PAD_MEASURE_CYCLE_DEFAULT (C 宏), 1048
TOUCH_PAD_MEASURE_WAIT_DEFAULT (C 宏), 1048
TOUCH_PAD_NUM0 (C++ 枚举子), 1049
TOUCH_PAD_NUM0_GPIO_NUM (C 宏), 1052
TOUCH_PAD_NUM1 (C++ 枚举子), 1049
TOUCH_PAD_NUM1_GPIO_NUM (C 宏), 1052
TOUCH_PAD_NUM2 (C++ 枚举子), 1049
TOUCH_PAD_NUM2_GPIO_NUM (C 宏), 1053
TOUCH_PAD_NUM3 (C++ 枚举子), 1049
TOUCH_PAD_NUM3_GPIO_NUM (C 宏), 1053
TOUCH_PAD_NUM4 (C++ 枚举子), 1049
TOUCH_PAD_NUM4_GPIO_NUM (C 宏), 1053
TOUCH_PAD_NUM5 (C++ 枚举子), 1049
TOUCH_PAD_NUM5_GPIO_NUM (C 宏), 1053
TOUCH_PAD_NUM6 (C++ 枚举子), 1049
TOUCH_PAD_NUM6_GPIO_NUM (C 宏), 1053
TOUCH_PAD_NUM7 (C++ 枚举子), 1049
TOUCH_PAD_NUM7_GPIO_NUM (C 宏), 1053
TOUCH_PAD_NUM8 (C++ 枚举子), 1049
TOUCH_PAD_NUM8_GPIO_NUM (C 宏), 1053
TOUCH_PAD_NUM9 (C++ 枚举子), 1049
TOUCH_PAD_NUM9_GPIO_NUM (C 宏), 1053
touch_pad_read (C++ 函数), 1038
touch_pad_read_filtered (C++ 函数), 1038
touch_pad_read_raw_data (C++ 函数), 1039
touch_pad_set_cnt_mode (C++ 函数), 1042
touch_pad_set_filter_period (C++ 函数), 1046
touch_pad_set_filter_read_cb (C++ 函数), 1039
touch_pad_set_fsm_mode (C++ 函数), 1043
touch_pad_set_group_mask (C++ 函数), 1045
touch_pad_set_meas_time (C++ 函数), 1040
touch_pad_set_thresh (C++ 函数), 1043
touch_pad_set_trigger_mode (C++ 函数), 1044
touch_pad_set_trigger_source (C++ 函数), 1044
touch_pad_set_voltage (C++ 函数), 1041
TOUCH_PAD_SLEEP_CYCLE_DEFAULT (C 宏), 1048
TOUCH_PAD_SLOPE_0 (C++ 枚举子), 1051
TOUCH_PAD_SLOPE_1 (C++ 枚举子), 1051
TOUCH_PAD_SLOPE_2 (C++ 枚举子), 1051
TOUCH_PAD_SLOPE_3 (C++ 枚举子), 1051
TOUCH_PAD_SLOPE_4 (C++ 枚举子), 1051
TOUCH_PAD_SLOPE_5 (C++ 枚举子), 1051
TOUCH_PAD_SLOPE_6 (C++ 枚举子), 1051
TOUCH_PAD_SLOPE_7 (C++ 枚举子), 1051
TOUCH_PAD_SLOPE_MAX (C++ 枚举子), 1051
touch_pad_sw_start (C++ 函数), 1043
touch_pad_t (C++ 类型), 1049
TOUCH_PAD_TIE_OPT_HIGH (C++ 枚举子), 1052
TOUCH_PAD_TIE_OPT_LOW (C++ 枚举子), 1052
TOUCH_PAD_TIE_OPT_MAX (C++ 枚举子), 1052
touch_tie_opt_t (C++ 类型), 1052
TOUCH_TRIGGER_ABOVE (C++ 枚举子), 1051
TOUCH_TRIGGER_BELOW (C++ 枚举子), 1051
TOUCH_TRIGGER_MAX (C++ 枚举子), 1051

TOUCH_TRIGGER_MODE_DEFAULT (C 宏), 1048
touch_trigger_mode_t (C++ 类型), 1051
TOUCH_TRIGGER_SOURCE_BOTH (C++ 枚举子), 1051
TOUCH_TRIGGER_SOURCE_DEFAULT (C 宏), 1048
TOUCH_TRIGGER_SOURCE_MAX (C++ 枚举子), 1052
TOUCH_TRIGGER_SOURCE_SET1 (C++ 枚举子), 1052
touch_trigger_src_t (C++ 类型), 1051
touch_volt_atten_t (C++ 类型), 1050
transaction_cb_t (C++ 类型), 1013
tskIDLE_PRIORITY (C 宏), 1352
tskKERNEL_VERSION_BUILD (C 宏), 1352
tskKERNEL_VERSION_MAJOR (C 宏), 1352
tskKERNEL_VERSION_MINOR (C 宏), 1352
tskKERNEL_VERSION_NUMBER (C 宏), 1352
tskNO_AFFINITY (C 宏), 1352

U

UART_BITRATE_MAX (C 宏), 1079
UART_BREAK (C++ 枚举子), 1081
UART_BUFFER_FULL (C++ 枚举子), 1081
uart_clear_intr_status (C++ 函数), 1065
uart_config_t (C++ 类), 1077
uart_config_t::baud_rate (C++ 成员), 1077
uart_config_t::data_bits (C++ 成员), 1077
uart_config_t::flow_ctrl (C++ 成员), 1078
uart_config_t::parity (C++ 成员), 1077
uart_config_t::rx_flow_ctrl_thresh (C++ 成员), 1078
uart_config_t::stop_bits (C++ 成员), 1077
uart_config_t::use_ref_tick (C++ 成员), 1078
UART_CTS_GPIO19_DIRECT_CHANNEL (C 宏), 1082
UART_CTS_GPIO6_DIRECT_CHANNEL (C 宏), 1083
UART_CTS_GPIO8_DIRECT_CHANNEL (C 宏), 1083
UART_DATA (C++ 枚举子), 1081
UART_DATA_5_BITS (C++ 枚举子), 1080
UART_DATA_6_BITS (C++ 枚举子), 1080
UART_DATA_7_BITS (C++ 枚举子), 1080
UART_DATA_8_BITS (C++ 枚举子), 1080
UART_DATA_BITS_MAX (C++ 枚举子), 1080
UART_DATA_BREAK (C++ 枚举子), 1082
uart_disable_intr_mask (C++ 函数), 1065
uart_disable_pattern_det_intr (C++ 函数), 1073
uart_disable_rx_intr (C++ 函数), 1066
uart_disable_tx_intr (C++ 函数), 1066
uart_driver_delete (C++ 函数), 1070
uart_driver_install (C++ 函数), 1069
uart_enable_intr_mask (C++ 函数), 1065
uart_enable_pattern_det_intr (C++ 函数), 1073
uart_enable_rx_intr (C++ 函数), 1066
uart_enable_tx_intr (C++ 函数), 1066
UART_EVENT_MAX (C++ 枚举子), 1082
uart_event_t (C++ 类), 1078
uart_event_t::size (C++ 成员), 1078
uart_event_t::type (C++ 成员), 1078
uart_event_type_t (C++ 类型), 1081
UART_FIFO_LEN (C 宏), 1078
UART_FIFO_OVF (C++ 枚举子), 1081
uart_flush (C++ 函数), 1072
uart_flush_input (C++ 函数), 1072
UART_FRAME_ERR (C++ 枚举子), 1081
uart_get_baudrate (C++ 函数), 1063
uart_get_buffered_data_len (C++ 函数), 1073
uart_get_collision_flag (C++ 函数), 1076
uart_get_hw_flow_ctrl (C++ 函数), 1064
uart_get_parity (C++ 函数), 1063
uart_get_stop_bits (C++ 函数), 1062
uart_get_wakeup_threshold (C++ 函数), 1077
uart_get_word_length (C++ 函数), 1062
UART_GPIO10_DIRECT_CHANNEL (C 宏), 1083
UART_GPIO11_DIRECT_CHANNEL (C 宏), 1083
UART_GPIO16_DIRECT_CHANNEL (C 宏), 1083
UART_GPIO17_DIRECT_CHANNEL (C 宏), 1083
UART_GPIO19_DIRECT_CHANNEL (C 宏), 1082
UART_GPIO1_DIRECT_CHANNEL (C 宏), 1082
UART_GPIO22_DIRECT_CHANNEL (C 宏), 1082
UART_GPIO3_DIRECT_CHANNEL (C 宏), 1082
UART_GPIO6_DIRECT_CHANNEL (C 宏), 1083
UART_GPIO7_DIRECT_CHANNEL (C 宏), 1083
UART_GPIO8_DIRECT_CHANNEL (C 宏), 1083
UART_GPIO9_DIRECT_CHANNEL (C 宏), 1083
uart_hw_flowcontrol_t (C++ 类型), 1081
UART_HW_FLOWCTRL_CTS (C++ 枚举子), 1081

UART_HW_FLOWCTRL_CTS_RTS (C++ 枚举子), 1081
UART_HW_FLOWCTRL_DISABLE (C++ 枚举子), 1081
UART_HW_FLOWCTRL_MAX (C++ 枚举子), 1081
UART_HW_FLOWCTRL_RTS (C++ 枚举子), 1081
uart_intr_config (C++ 函数), 1069
uart_intr_config_t (C++ 类), 1078
uart_intr_config_t::intr_enable_mask (C++ 成员), 1078
uart_intr_config_t::rx_timeout_thresh (C++ 成员), 1078
uart_intr_config_t::rxfifo_full_thresh (C++ 成员), 1078
uart_intr_config_t::txfifo_empty_intr_thresh (C++ 成员), 1078
UART_INTR_MASK (C 宏), 1078
UART_INVERSE_CTS (C 宏), 1079
UART_INVERSE_DISABLE (C 宏), 1079
UART_INVERSE_RTS (C 宏), 1079
UART_INVERSE_RXD (C 宏), 1079
UART_INVERSE_TXD (C 宏), 1079
uart_isr_free (C++ 函数), 1067
uart_isr_handle_t (C++ 类型), 1079
uart_isr_register (C++ 函数), 1067
UART_LINE_INV_MASK (C 宏), 1079
UART_MODE_IRDA (C++ 枚举子), 1079
UART_MODE_RS485_APP_CTRL (C++ 枚举子), 1079
UART_MODE_RS485_COLLISION_DETECT (C++ 枚举子), 1079
UART_MODE_RS485_HALF_DUPLEX (C++ 枚举子), 1079
uart_mode_t (C++ 类型), 1079
UART_MODE_UART (C++ 枚举子), 1079
UART_NUM_0 (C++ 枚举子), 1080
UART_NUM_0_CTS_DIRECT_GPIO_NUM (C 宏), 1082
UART_NUM_0_RTS_DIRECT_GPIO_NUM (C 宏), 1082
UART_NUM_0_RXD_DIRECT_GPIO_NUM (C 宏), 1082
UART_NUM_0_TXD_DIRECT_GPIO_NUM (C 宏), 1082
UART_NUM_1 (C++ 枚举子), 1080
UART_NUM_1_CTS_DIRECT_GPIO_NUM (C 宏), 1083
UART_NUM_1_RTS_DIRECT_GPIO_NUM (C 宏), 1083
UART_NUM_1_RXD_DIRECT_GPIO_NUM (C 宏), 1083
UART_NUM_1_TXD_DIRECT_GPIO_NUM (C 宏), 1083
UART_NUM_2 (C++ 枚举子), 1080
UART_NUM_2_CTS_DIRECT_GPIO_NUM (C 宏), 1083
UART_NUM_2_RTS_DIRECT_GPIO_NUM (C 宏), 1083
UART_NUM_2_RXD_DIRECT_GPIO_NUM (C 宏), 1083
UART_NUM_2_TXD_DIRECT_GPIO_NUM (C 宏), 1083
UART_NUM_MAX (C++ 枚举子), 1080
uart_param_config (C++ 函数), 1069
UART_PARITY_DISABLE (C++ 枚举子), 1081
UART_PARITY_ERR (C++ 枚举子), 1081
UART_PARITY_EVEN (C++ 枚举子), 1081
UART_PARITY_ODD (C++ 枚举子), 1081
uart_parity_t (C++ 类型), 1080
UART_PATTERN_DET (C++ 枚举子), 1082
uart_pattern_get_pos (C++ 函数), 1074
uart_pattern_pop_pos (C++ 函数), 1074
uart_pattern_queue_reset (C++ 函数), 1075
UART_PIN_NO_CHANGE (C 宏), 1079
uart_port_t (C++ 类型), 1080
uart_read_bytes (C++ 函数), 1072
UART_RTS_GPIO11_DIRECT_CHANNEL (C 宏), 1083
UART_RTS_GPIO22_DIRECT_CHANNEL (C 宏), 1083
UART_RTS_GPIO7_DIRECT_CHANNEL (C 宏), 1083
UART_RXD_GPIO16_DIRECT_CHANNEL (C 宏), 1083
UART_RXD_GPIO3_DIRECT_CHANNEL (C 宏), 1082
UART_RXD_GPIO9_DIRECT_CHANNEL (C 宏), 1083
uart_set_baudrate (C++ 函数), 1063
uart_set_dtr (C++ 函数), 1068
uart_set_hw_flow_ctrl (C++ 函数), 1064
uart_set_line_inverse (C++ 函数), 1063
uart_set_mode (C++ 函数), 1075
uart_set_parity (C++ 函数), 1062
uart_set_pin (C++ 函数), 1067
uart_set_rts (C++ 函数), 1068
uart_set_rx_timeout (C++ 函数), 1075
uart_set_stop_bits (C++ 函数), 1062
uart_set_sw_flow_ctrl (C++ 函数), 1064
uart_set_tx_idle_num (C++ 函数), 1068
uart_set_wakeup_threshold (C++ 函数), 1076
uart_set_word_length (C++ 函数), 1061
UART_STOP_BITS_1 (C++ 枚举子), 1080
UART_STOP_BITS_1_5 (C++ 枚举子), 1080
UART_STOP_BITS_2 (C++ 枚举子), 1080

UART_STOP_BITS_MAX (C++ 枚举子), 1080
uart_stop_bits_t (C++ 类型), 1080
uart_tx_chars (C++ 函数), 1070
UART_TXD_GPIO10_DIRECT_CHANNEL (C 宏), 1083
UART_TXD_GPIO17_DIRECT_CHANNEL (C 宏), 1083
UART_TXD_GPIO1_DIRECT_CHANNEL (C 宏), 1082
uart_wait_tx_done (C++ 函数), 1070
uart_word_length_t (C++ 类型), 1080
uart_write_bytes (C++ 函数), 1071
uart_write_bytes_with_break (C++ 函数), 1071
UINT16 (C++ 类型), 408
UINT32 (C++ 类型), 408
UINT64 (C++ 类型), 408
UINT8 (C++ 类型), 408
ulp_load_binary (C++ 函数), 2043, 2049
ulp_process_macros_and_load (C++ 函数), 2035
ulp_run (C++ 函数), 2035, 2044, 2050
ulp_set_wakeup_period (C++ 函数), 2044, 2050
ulTaskNotifyTake (C++ 函数), 1349
uxQueueMessagesWaiting (C++ 函数), 1361
uxQueueMessagesWaitingFromISR (C++ 函数), 1357
uxQueueSpacesAvailable (C++ 函数), 1361
uxSemaphoreGetCount (C 宏), 1404
uxTaskGetNumberOfTasks (C++ 函数), 1337
uxTaskGetStackHighWaterMark (C++ 函数), 1337
uxTaskGetSystemState (C++ 函数), 1340
uxTaskPriorityGet (C++ 函数), 1330
uxTaskPriorityGetFromISR (C++ 函数), 1331

V

vendor_ie_data_t (C++ 类), 670
vendor_ie_data_t::element_id (C++ 成员), 670
vendor_ie_data_t::length (C++ 成员), 670
vendor_ie_data_t::payload (C++ 成员), 670
vendor_ie_data_t::vendor_oui (C++ 成员), 670
vendor_ie_data_t::vendor_oui_type (C++ 成员), 670
vEventGroupDelete (C++ 函数), 1438
vprintf_like_t (C++ 类型), 1532
vQueueAddToRegistry (C++ 函数), 1363
vQueueDelete (C++ 函数), 1361
vQueueUnregisterQueue (C++ 函数), 1364
vRingbufferDelete (C++ 函数), 1455
vRingbufferGetInfo (C++ 函数), 1457
vRingbufferReturnItem (C++ 函数), 1455
vRingbufferReturnItemFromISR (C++ 函数), 1455
vSemaphoreDelete (C 宏), 1404
VSPI_HOST (C++ 枚举子), 1002
vTaskDelay (C++ 函数), 1328
vTaskDelayUntil (C++ 函数), 1329
vTaskDelete (C++ 函数), 1327
vTaskGetRunTimeStats (C++ 函数), 1344
vTaskList (C++ 函数), 1343
vTaskNotifyGiveFromISR (C++ 函数), 1348
vTaskPrioritySet (C++ 函数), 1332
vTaskResume (C++ 函数), 1333
vTaskSetApplicationTaskTag (C++ 函数), 1338
vTaskSetThreadLocalStoragePointer (C++ 函数), 1338
vTaskSetThreadLocalStoragePointerAndDelCallback (C++ 函数), 1339
vTaskSuspend (C++ 函数), 1332
vTaskSuspendAll (C++ 函数), 1335
vTimerSetTimerID (C++ 函数), 1411

W

WEBSOCKET_EVENT_ANY (C++ 枚举子), 1183
WEBSOCKET_EVENT_CONNECTED (C++ 枚举子), 1183
WEBSOCKET_EVENT_DATA (C++ 枚举子), 1183
WEBSOCKET_EVENT_DISCONNECTED (C++ 枚举子), 1183
WEBSOCKET_EVENT_ERROR (C++ 枚举子), 1183
WEBSOCKET_EVENT_MAX (C++ 枚举子), 1183
WEBSOCKET_TRANSPORT_OVER_SSL (C++ 枚举子), 1184
WEBSOCKET_TRANSPORT_OVER_TCP (C++ 枚举子), 1184
WEBSOCKET_TRANSPORT_UNKNOWN (C++ 枚举子), 1184
wifi_active_scan_time_t (C++ 类), 665
wifi_active_scan_time_t::max (C++ 成员), 666
wifi_active_scan_time_t::min (C++ 成员), 666
WIFI_ALL_CHANNEL_SCAN (C++ 枚举子), 680

WIFI_AMPDU_RX_ENABLED (C 宏), 663
WIFI_AMPDU_TX_ENABLED (C 宏), 663
WIFI_ANT_ANT0 (C++ 枚举子), 680
WIFI_ANT_ANT1 (C++ 枚举子), 680
wifi_ant_config_t (C++ 类), 674
wifi_ant_config_t::enabled_ant0 (C++ 成员), 674
wifi_ant_config_t::enabled_ant1 (C++ 成员), 674
wifi_ant_config_t::rx_ant_default (C++ 成员), 674
wifi_ant_config_t::rx_ant_mode (C++ 成员), 674
wifi_ant_config_t::tx_ant_mode (C++ 成员), 674
wifi_ant_gpio_config_t (C++ 类), 674
wifi_ant_gpio_config_t::gpio_cfg (C++ 成员), 674
wifi_ant_gpio_t (C++ 类), 673
wifi_ant_gpio_t::gpio_num (C++ 成员), 674
wifi_ant_gpio_t::gpio_select (C++ 成员), 674
WIFI_ANT_MAX (C++ 枚举子), 680
WIFI_ANT_MODE_ANT0 (C++ 枚举子), 682
WIFI_ANT_MODE_ANT1 (C++ 枚举子), 682
WIFI_ANT_MODE_AUTO (C++ 枚举子), 682
WIFI_ANT_MODE_MAX (C++ 枚举子), 682
wifi_ant_mode_t (C++ 类型), 682
wifi_ant_t (C++ 类型), 680
wifi_ap_config_t (C++ 类), 668
wifi_ap_config_t::authmode (C++ 成员), 668
wifi_ap_config_t::beacon_interval (C++ 成员), 668
wifi_ap_config_t::channel (C++ 成员), 668
wifi_ap_config_t::max_connection (C++ 成员), 668
wifi_ap_config_t::password (C++ 成员), 668
wifi_ap_config_t::ssid (C++ 成员), 668
wifi_ap_config_t::ssid_hidden (C++ 成员), 668
wifi_ap_config_t::ssid_len (C++ 成员), 668
wifi_ap_record_t (C++ 类), 666
wifi_ap_record_t::ant (C++ 成员), 667
wifi_ap_record_t::authmode (C++ 成员), 667
wifi_ap_record_t::bssid (C++ 成员), 667
wifi_ap_record_t::country (C++ 成员), 667
wifi_ap_record_t::group_cipher (C++ 成员), 667
wifi_ap_record_t::pairwise_cipher (C++ 成员), 667
wifi_ap_record_t::phy_11b (C++ 成员), 667
wifi_ap_record_t::phy_11g (C++ 成员), 667
wifi_ap_record_t::phy_11n (C++ 成员), 667
wifi_ap_record_t::phy_lr (C++ 成员), 667
wifi_ap_record_t::primary (C++ 成员), 667
wifi_ap_record_t::reserved (C++ 成员), 667
wifi_ap_record_t::rssi (C++ 成员), 667
wifi_ap_record_t::second (C++ 成员), 667
wifi_ap_record_t::ssid (C++ 成员), 667
wifi_ap_record_t::wps (C++ 成员), 667
WIFI_AUTH_MAX (C++ 枚举子), 678
wifi_auth_mode_t (C++ 类型), 677
WIFI_AUTH_OPEN (C++ 枚举子), 677
WIFI_AUTH_WEP (C++ 枚举子), 677
WIFI_AUTH_WPA2_ENTERPRISE (C++ 枚举子), 678
WIFI_AUTH_WPA2_PSK (C++ 枚举子), 677
WIFI_AUTH_WPA_PSK (C++ 枚举子), 677
WIFI_AUTH_WPA_WPA2_PSK (C++ 枚举子), 678
wifi_bandwidth_t (C++ 类型), 680
WIFI_BW_HT20 (C++ 枚举子), 681
WIFI_BW_HT40 (C++ 枚举子), 681
WIFI_CIPHER_TYPE_CCMP (C++ 枚举子), 679
WIFI_CIPHER_TYPE_NONE (C++ 枚举子), 679
wifi_cipher_type_t (C++ 类型), 679
WIFI_CIPHER_TYPE_TKIP (C++ 枚举子), 679
WIFI_CIPHER_TYPE_TKIP_CCMP (C++ 枚举子), 679
WIFI_CIPHER_TYPE_UNKNOWN (C++ 枚举子), 680
WIFI_CIPHER_TYPE_WEP104 (C++ 枚举子), 679
WIFI_CIPHER_TYPE_WEP40 (C++ 枚举子), 679
wifi_config_t (C++ 类型), 665
wifi_config_t::ap (C++ 成员), 665
wifi_config_t::sta (C++ 成员), 665
WIFI_CONNECT_AP_BY_SECURITY (C++ 枚举子), 680
WIFI_CONNECT_AP_BY_SIGNAL (C++ 枚举子), 680
WIFI_COUNTRY_POLICY_AUTO (C++ 枚举子), 677
WIFI_COUNTRY_POLICY_MANUAL (C++ 枚举子), 677

wifi_country_policy_t (C++ 类型), 677
wifi_country_t (C++ 类), 665
wifi_country_t::cc (C++ 成员), 665
wifi_country_t::max_tx_power (C++ 成员), 665
wifi_country_t::nchan (C++ 成员), 665
wifi_country_t::policy (C++ 成员), 665
wifi_country_t::schan (C++ 成员), 665
wifi_csi_cb_t (C++ 类型), 664
wifi_csi_config_t (C++ 类), 672
wifi_csi_config_t::channel_filter_en (C++ 成员), 673
wifi_csi_config_t::htltf_en (C++ 成员), 673
wifi_csi_config_t::lltf_en (C++ 成员), 673
wifi_csi_config_t::ltf_merge_en (C++ 成员), 673
wifi_csi_config_t::manu_scale (C++ 成员), 673
wifi_csi_config_t::shift (C++ 成员), 673
wifi_csi_config_t::stbc_htltf2_en (C++ 成员), 673
WIFI_CSI_ENABLED (C 宏), 663
wifi_csi_info_t (C++ 类), 673
wifi_csi_info_t::buf (C++ 成员), 673
wifi_csi_info_t::first_word_invalid (C++ 成员), 673
wifi_csi_info_t::len (C++ 成员), 673
wifi_csi_info_t::mac (C++ 成员), 673
wifi_csi_info_t::rx_ctrl (C++ 成员), 673
WIFI_DEFAULT_RX_BA_WIN (C 宏), 663
WIFI_DEFAULT_TX_BA_WIN (C 宏), 663
WIFI_DYNAMIC_TX_BUFFER_NUM (C 宏), 663
wifi_err_reason_t (C++ 类型), 678
WIFI_EVENT_MASK_ALL (C 宏), 676
WIFI_EVENT_MASK_AP_PROBEREQRECVED (C 宏), 676
WIFI_EVENT_MASK_NONE (C 宏), 676
WIFI_FAST_SCAN (C++ 枚举子), 680
wifi_fast_scan_threshold_t (C++ 类), 667
wifi_fast_scan_threshold_t::authmode (C++ 成员), 668
wifi_fast_scan_threshold_t::rssi (C++ 成员), 668
wifi_ht2040_coex_t (C++ 类), 674
wifi_ht2040_coex_t::enable (C++ 成员), 674
WIFI_IF_AP (C 宏), 675
WIFI_IF_STA (C 宏), 675
WIFI_INIT_CONFIG_DEFAULT (C 宏), 663
WIFI_INIT_CONFIG_MAGIC (C 宏), 663
wifi_init_config_t (C++ 类), 661
wifi_init_config_t::ampdu_rx_enable (C++ 成员), 661
wifi_init_config_t::ampdu_tx_enable (C++ 成员), 661
wifi_init_config_t::beacon_max_len (C++ 成员), 662
wifi_init_config_t::csi_enable (C++ 成员), 661
wifi_init_config_t::dynamic_rx_buf_num (C++ 成员), 661
wifi_init_config_t::dynamic_tx_buf_num (C++ 成员), 661
wifi_init_config_t::event_handler (C++ 成员), 661
wifi_init_config_t::feature_caps (C++ 成员), 662
wifi_init_config_t::magic (C++ 成员), 662
wifi_init_config_t::mgmt_sbuf_num (C++ 成员), 662
wifi_init_config_t::nano_enable (C++ 成员), 661
wifi_init_config_t::nvs_enable (C++ 成员), 661
wifi_init_config_t::osi_funcs (C++ 成员), 661
wifi_init_config_t::rx_ba_win (C++ 成员), 661
wifi_init_config_t::static_rx_buf_num (C++ 成员), 661
wifi_init_config_t::static_tx_buf_num (C++ 成员), 661
wifi_init_config_t::tx_ba_win (C++ 成员), 661
wifi_init_config_t::tx_buf_type (C++ 成员), 661
wifi_init_config_t::wifi_task_core_id (C++ 成员), 662
wifi_init_config_t::wpa_crypto_funcs (C++ 成员), 661
wifi_interface_t (C++ 类型), 677

wifi_ioctl_cmd_t (C++ 类型), 684
wifi_ioctl_config_t (C++ 类), 674
wifi_ioctl_config_t::data (C++ 成员), 675
wifi_ioctl_config_t::ht2040_coex (C++ 成员), 675
WIFI_IOCTL_GET_STA_HT2040_COEX (C++ 枚举子), 684
WIFI_IOCTL_MAX (C++ 枚举子), 684
WIFI_IOCTL_SET_STA_HT2040_COEX (C++ 枚举子), 684
WIFI_MGMT_SBUF_NUM (C 宏), 663
WIFI_MODE_AP (C++ 枚举子), 677
WIFI_MODE_APSTA (C++ 枚举子), 677
WIFI_MODE_MAX (C++ 枚举子), 677
WIFI_MODE_NULL (C++ 枚举子), 677
WIFI_MODE_STA (C++ 枚举子), 677
wifi_mode_t (C++ 类型), 677
WIFI_NANO_FORMAT_ENABLED (C 宏), 663
WIFI_NVS_ENABLED (C 宏), 663
WIFI_PHY_RATE_11M_L (C++ 枚举子), 682
WIFI_PHY_RATE_11M_S (C++ 枚举子), 682
WIFI_PHY_RATE_12M (C++ 枚举子), 683
WIFI_PHY_RATE_18M (C++ 枚举子), 683
WIFI_PHY_RATE_1M_L (C++ 枚举子), 682
WIFI_PHY_RATE_24M (C++ 枚举子), 682
WIFI_PHY_RATE_2M_L (C++ 枚举子), 682
WIFI_PHY_RATE_2M_S (C++ 枚举子), 682
WIFI_PHY_RATE_36M (C++ 枚举子), 683
WIFI_PHY_RATE_48M (C++ 枚举子), 682
WIFI_PHY_RATE_54M (C++ 枚举子), 683
WIFI_PHY_RATE_5M_L (C++ 枚举子), 682
WIFI_PHY_RATE_5M_S (C++ 枚举子), 682
WIFI_PHY_RATE_6M (C++ 枚举子), 683
WIFI_PHY_RATE_9M (C++ 枚举子), 683
WIFI_PHY_RATE_LORA_250K (C++ 枚举子), 684
WIFI_PHY_RATE_LORA_500K (C++ 枚举子), 684
WIFI_PHY_RATE_MAX (C++ 枚举子), 684
WIFI_PHY_RATE_MCS0_LGI (C++ 枚举子), 683
WIFI_PHY_RATE_MCS0_SGI (C++ 枚举子), 683
WIFI_PHY_RATE_MCS1_LGI (C++ 枚举子), 683
WIFI_PHY_RATE_MCS1_SGI (C++ 枚举子), 683
WIFI_PHY_RATE_MCS2_LGI (C++ 枚举子), 683
WIFI_PHY_RATE_MCS2_SGI (C++ 枚举子), 683
WIFI_PHY_RATE_MCS3_LGI (C++ 枚举子), 683
WIFI_PHY_RATE_MCS3_SGI (C++ 枚举子), 684
WIFI_PHY_RATE_MCS4_LGI (C++ 枚举子), 683
WIFI_PHY_RATE_MCS4_SGI (C++ 枚举子), 684
WIFI_PHY_RATE_MCS5_LGI (C++ 枚举子), 683
WIFI_PHY_RATE_MCS5_SGI (C++ 枚举子), 684
WIFI_PHY_RATE_MCS6_LGI (C++ 枚举子), 683
WIFI_PHY_RATE_MCS6_SGI (C++ 枚举子), 684
WIFI_PHY_RATE_MCS7_LGI (C++ 枚举子), 683
WIFI_PHY_RATE_MCS7_SGI (C++ 枚举子), 684
wifi_phy_rate_t (C++ 类型), 682
WIFI_PKT_CTRL (C++ 枚举子), 681
WIFI_PKT_DATA (C++ 枚举子), 681
WIFI_PKT_MGMT (C++ 枚举子), 681
WIFI_PKT_MISC (C++ 枚举子), 682
wifi_pkt_rx_ctrl_t (C++ 类), 670
wifi_pkt_rx_ctrl_t::__pad0__ (C++ 成员), 670
wifi_pkt_rx_ctrl_t::__pad1__ (C++ 成员), 671
wifi_pkt_rx_ctrl_t::__pad2__ (C++ 成员), 671
wifi_pkt_rx_ctrl_t::__pad3__ (C++ 成员), 671
wifi_pkt_rx_ctrl_t::__pad4__ (C++ 成员), 671
wifi_pkt_rx_ctrl_t::__pad5__ (C++ 成员), 672
wifi_pkt_rx_ctrl_t::__pad6__ (C++ 成员), 672
wifi_pkt_rx_ctrl_t::__pad7__ (C++ 成员), 672
wifi_pkt_rx_ctrl_t::aggregation (C++ 成员), 671
wifi_pkt_rx_ctrl_t::ampdu_cnt (C++ 成员), 671
wifi_pkt_rx_ctrl_t::ant (C++ 成员), 672
wifi_pkt_rx_ctrl_t::channel (C++ 成员), 671
wifi_pkt_rx_ctrl_t::cwb (C++ 成员), 671
wifi_pkt_rx_ctrl_t::fec_coding (C++ 成员), 671
wifi_pkt_rx_ctrl_t::mcs (C++ 成员), 671
wifi_pkt_rx_ctrl_t::noise_floor (C++ 成员), 671
wifi_pkt_rx_ctrl_t::not_sounding (C++ 成员), 671
wifi_pkt_rx_ctrl_t::rate (C++ 成员), 670
wifi_pkt_rx_ctrl_t::rssi (C++ 成员), 670
wifi_pkt_rx_ctrl_t::rx_state (C++ 成员), 672
wifi_pkt_rx_ctrl_t::secondary_channel (C++

成员), 671
wifi_pkt_rx_ctrl_t::sgi (C++ 成员), 671
wifi_pkt_rx_ctrl_t::sig_len (C++ 成员), 672
wifi_pkt_rx_ctrl_t::sig_mode (C++ 成员), 671
wifi_pkt_rx_ctrl_t::smoothing (C++ 成员), 671
wifi_pkt_rx_ctrl_t::stbc (C++ 成员), 671
wifi_pkt_rx_ctrl_t::timestamp (C++ 成员), 672
WIFI_PROMIS_CTRL_FILTER_MASK_ACK (C 宏), 676
WIFI_PROMIS_CTRL_FILTER_MASK_ALL (C 宏), 676
WIFI_PROMIS_CTRL_FILTER_MASK_BA (C 宏), 676
WIFI_PROMIS_CTRL_FILTER_MASK_BAR (C 宏), 676
WIFI_PROMIS_CTRL_FILTER_MASK_CFEND (C 宏), 676
WIFI_PROMIS_CTRL_FILTER_MASK_CFENDACK (C 宏), 676
WIFI_PROMIS_CTRL_FILTER_MASK_CTS (C 宏), 676
WIFI_PROMIS_CTRL_FILTER_MASK_PSPOLL (C 宏), 676
WIFI_PROMIS_CTRL_FILTER_MASK_RTS (C 宏), 676
WIFI_PROMIS_CTRL_FILTER_MASK_WRAPPER (C 宏), 676
WIFI_PROMIS_FILTER_MASK_ALL (C 宏), 675
WIFI_PROMIS_FILTER_MASK_CTRL (C 宏), 675
WIFI_PROMIS_FILTER_MASK_DATA (C 宏), 675
WIFI_PROMIS_FILTER_MASK_DATA_AMPDU (C 宏), 675
WIFI_PROMIS_FILTER_MASK_DATA_MPDU (C 宏), 675
WIFI_PROMIS_FILTER_MASK_FCSFAIL (C 宏), 676
WIFI_PROMIS_FILTER_MASK_MGMT (C 宏), 675
WIFI_PROMIS_FILTER_MASK_MISC (C 宏), 675
wifi_promiscuous_cb_t (C++ 类型), 664
wifi_promiscuous_filter_t (C++ 类), 672
wifi_promiscuous_filter_t::filter_mask (C++ 成员), 672
wifi_promiscuous_pkt_t (C++ 类), 672
wifi_promiscuous_pkt_t::payload (C++ 成员), 672
wifi_promiscuous_pkt_t::rx_ctrl (C++ 成员), 672
wifi_promiscuous_pkt_type_t (C++ 类型), 681
WIFI_PROTOCOL_11B (C 宏), 675
WIFI_PROTOCOL_11G (C 宏), 675
WIFI_PROTOCOL_11N (C 宏), 675
WIFI_PROTOCOL_LR (C 宏), 675
wifi_prov_cb_event_t (C++ 类型), 1223
wifi_prov_cb_func_t (C++ 类型), 1222
wifi_prov_config_data_handler (C++ 函数), 1225
wifi_prov_config_get_data_t (C++ 类), 1226
wifi_prov_config_get_data_t::conn_info (C++ 成员), 1226
wifi_prov_config_get_data_t::fail_reason (C++ 成员), 1226
wifi_prov_config_get_data_t::wifi_state (C++ 成员), 1226
wifi_prov_config_handlers (C++ 类), 1227
wifi_prov_config_handlers::apply_config_handler (C++ 成员), 1227
wifi_prov_config_handlers::ctx (C++ 成员), 1227
wifi_prov_config_handlers::get_status_handler (C++ 成员), 1227
wifi_prov_config_handlers::set_config_handler (C++ 成员), 1227
wifi_prov_config_handlers_t (C++ 类型), 1227
wifi_prov_config_set_data_t (C++ 类), 1226
wifi_prov_config_set_data_t::bssid (C++ 成员), 1227
wifi_prov_config_set_data_t::channel (C++ 成员), 1227
wifi_prov_config_set_data_t::password (C++ 成员), 1226
wifi_prov_config_set_data_t::ssid (C++ 成员), 1226
WIFI_PROV_CRED_FAIL (C++ 枚举子), 1223
WIFI_PROV_CRED_RECV (C++ 枚举子), 1223
WIFI_PROV_CRED_SUCCESS (C++ 枚举子), 1223
wifi_prov_ctx_t (C++ 类型), 1227
WIFI_PROV_DEINIT (C++ 枚举子), 1223
WIFI_PROV_END (C++ 枚举子), 1223
WIFI_PROV_EVENT_HANDLER_NONE (C 宏), 1222
wifi_prov_event_handler_t (C++ 类), 1220
wifi_prov_event_handler_t::event_cb (C++ 成员), 1221
wifi_prov_event_handler_t::user_data (C++ 成员), 1221

WIFI_PROV_INIT (C++ 枚举子), 1223
wifi_prov_mgr_config_t (C++ 类), 1222
wifi_prov_mgr_config_t::app_event_handler (C++ 成员), 1222
wifi_prov_mgr_config_t::scheme (C++ 成员), 1222
wifi_prov_mgr_config_t::scheme_event_handler (C++ 成员), 1222
wifi_prov_mgr_configure_sta (C++ 函数), 1220
wifi_prov_mgr_deinit (C++ 函数), 1214
wifi_prov_mgr_disable_auto_stop (C++ 函数), 1216
wifi_prov_mgr_endpoint_create (C++ 函数), 1218
wifi_prov_mgr_endpoint_register (C++ 函数), 1218
wifi_prov_mgr_endpoint_unregister (C++ 函数), 1219
wifi_prov_mgr_event_handler (C++ 函数), 1219
wifi_prov_mgr_get_wifi_disconnect_reason (C++ 函数), 1220
wifi_prov_mgr_get_wifi_state (C++ 函数), 1219
wifi_prov_mgr_init (C++ 函数), 1214
wifi_prov_mgr_is_provisioned (C++ 函数), 1214
wifi_prov_mgr_set_app_info (C++ 函数), 1217
wifi_prov_mgr_start_provisioning (C++ 函数), 1215
wifi_prov_mgr_stop_provisioning (C++ 函数), 1216
wifi_prov_mgr_wait (C++ 函数), 1216
wifi_prov_scheme (C++ 类), 1221
wifi_prov_scheme::delete_config (C++ 成员), 1221
wifi_prov_scheme::new_config (C++ 成员), 1221
wifi_prov_scheme::prov_start (C++ 成员), 1221
wifi_prov_scheme::prov_stop (C++ 成员), 1221
wifi_prov_scheme::set_config_endpoint (C++ 成员), 1221
wifi_prov_scheme::set_config_service (C++ 成员), 1221
wifi_prov_scheme::wifi_mode (C++ 成员), 1221
wifi_prov_scheme_ble_event_cb_free_ble (C++ 函数), 1224
wifi_prov_scheme_ble_event_cb_free_bt (C++ 函数), 1224
wifi_prov_scheme_ble_event_cb_free_btdm (C++ 函数), 1224
WIFI_PROV_SCHEME_BLE_EVENT_HANDLER_FREE_BLE (C 宏), 1225
WIFI_PROV_SCHEME_BLE_EVENT_HANDLER_FREE_BT (C 宏), 1225
WIFI_PROV_SCHEME_BLE_EVENT_HANDLER_FREE_BTDM (C 宏), 1225
wifi_prov_scheme_ble_set_service_uuid (C++ 函数), 1224
wifi_prov_scheme_softap_set_httpd_handle (C++ 函数), 1225
wifi_prov_scheme_t (C++ 类型), 1222
wifi_prov_security (C++ 类型), 1223
WIFI_PROV_SECURITY_0 (C++ 枚举子), 1224
WIFI_PROV_SECURITY_1 (C++ 枚举子), 1224
wifi_prov_security_t (C++ 类型), 1223
WIFI_PROV_STA_AP_NOT_FOUND (C++ 枚举子), 1228
WIFI_PROV_STA_AUTH_ERROR (C++ 枚举子), 1228
wifi_prov_sta_conn_info_t (C++ 类), 1226
wifi_prov_sta_conn_info_t::auth_mode (C++ 成员), 1226
wifi_prov_sta_conn_info_t::bssid (C++ 成员), 1226
wifi_prov_sta_conn_info_t::channel (C++ 成员), 1226
wifi_prov_sta_conn_info_t::ip_addr (C++ 成员), 1226
wifi_prov_sta_conn_info_t::ssid (C++ 成员), 1226
WIFI_PROV_STA_CONNECTED (C++ 枚举子), 1228
WIFI_PROV_STA_CONNECTING (C++ 枚举子), 1228
WIFI_PROV_STA_DISCONNECTED (C++ 枚举子), 1228
wifi_prov_sta_fail_reason_t (C++ 类型), 1228
wifi_prov_sta_state_t (C++ 类型), 1228
WIFI_PROV_START (C++ 枚举子), 1223
WIFI_PS_MAX_MODEM (C++ 枚举子), 680
WIFI_PS_MIN_MODEM (C++ 枚举子), 680
WIFI_PS_MODEM (C 宏), 675

WIFI_PS_NONE (C++ 枚举子), 680
wifi_ps_type_t (C++ 类型), 680
WIFI_REASON_4WAY_HANDSHAKE_TIMEOUT (C++ 枚举子), 678
WIFI_REASON_802_1X_AUTH_FAILED (C++ 枚举子), 678
WIFI_REASON_AKMP_INVALID (C++ 枚举子), 678
WIFI_REASON_AP_TSF_RESET (C++ 枚举子), 679
WIFI_REASON_ASSOC_EXPIRE (C++ 枚举子), 678
WIFI_REASON_ASSOC_FAIL (C++ 枚举子), 679
WIFI_REASON_ASSOC_LEAVE (C++ 枚举子), 678
WIFI_REASON_ASSOC_NOT_AUTHED (C++ 枚举子), 678
WIFI_REASON_ASSOC_TOOMANY (C++ 枚举子), 678
WIFI_REASON_AUTH_EXPIRE (C++ 枚举子), 678
WIFI_REASON_AUTH_FAIL (C++ 枚举子), 679
WIFI_REASON_AUTH_LEAVE (C++ 枚举子), 678
WIFI_REASON_BEACON_TIMEOUT (C++ 枚举子), 679
WIFI_REASON_CIPHER_SUITE_REJECTED (C++ 枚举子), 678
WIFI_REASON_CONNECTION_FAIL (C++ 枚举子), 679
WIFI_REASON_DISASSOC_PWRCAP_BAD (C++ 枚举子), 678
WIFI_REASON_DISASSOC_SUPCHAN_BAD (C++ 枚举子), 678
WIFI_REASON_GROUP_CIPHER_INVALID (C++ 枚举子), 678
WIFI_REASON_GROUP_KEY_UPDATE_TIMEOUT (C++ 枚举子), 678
WIFI_REASON_HANDSHAKE_TIMEOUT (C++ 枚举子), 679
WIFI_REASON_IE_IN_4WAY_DIFFERS (C++ 枚举子), 678
WIFI_REASON_IE_INVALID (C++ 枚举子), 678
WIFI_REASON_INVALID_RSN_IE_CAP (C++ 枚举子), 678
WIFI_REASON_MIC_FAILURE (C++ 枚举子), 678
WIFI_REASON_NO_AP_FOUND (C++ 枚举子), 679
WIFI_REASON_NOT_ASSOCED (C++ 枚举子), 678
WIFI_REASON_NOT_AUTHED (C++ 枚举子), 678
WIFI_REASON_PAIRWISE_CIPHER_INVALID (C++ 枚举子), 678
WIFI_REASON_UNSPECIFIED (C++ 枚举子), 678
WIFI_REASON_UNSUPP_RSN_IE_VERSION (C++ 枚举子), 678
wifi_scan_config_t (C++ 类), 666
wifi_scan_config_t::bssid (C++ 成员), 666
wifi_scan_config_t::channel (C++ 成员), 666
wifi_scan_config_t::scan_time (C++ 成员), 666
wifi_scan_config_t::scan_type (C++ 成员), 666
wifi_scan_config_t::show_hidden (C++ 成员), 666
wifi_scan_config_t::ssid (C++ 成员), 666
wifi_scan_method_t (C++ 类型), 680
wifi_scan_threshold_t (C++ 类型), 677
wifi_scan_time_t (C++ 类), 666
wifi_scan_time_t::active (C++ 成员), 666
wifi_scan_time_t::passive (C++ 成员), 666
WIFI_SCAN_TYPE_ACTIVE (C++ 枚举子), 679
WIFI_SCAN_TYPE_PASSIVE (C++ 枚举子), 679
wifi_scan_type_t (C++ 类型), 679
WIFI_SECOND_CHAN_ABOVE (C++ 枚举子), 679
WIFI_SECOND_CHAN_BELOW (C++ 枚举子), 679
WIFI_SECOND_CHAN_NONE (C++ 枚举子), 679
wifi_second_chan_t (C++ 类型), 679
WIFI_SOFTAP_BEACON_MAX_LEN (C 宏), 663
wifi_sort_method_t (C++ 类型), 680
wifi_sta_config_t (C++ 类), 668
wifi_sta_config_t::bssid (C++ 成员), 669
wifi_sta_config_t::bssid_set (C++ 成员), 669
wifi_sta_config_t::channel (C++ 成员), 669
wifi_sta_config_t::listen_interval (C++ 成员), 669
wifi_sta_config_t::password (C++ 成员), 668
wifi_sta_config_t::scan_method (C++ 成员), 669
wifi_sta_config_t::sort_method (C++ 成员), 669
wifi_sta_config_t::ssid (C++ 成员), 668
wifi_sta_config_t::threshold (C++ 成员), 669
wifi_sta_info_t (C++ 类), 669
wifi_sta_info_t::mac (C++ 成员), 669
wifi_sta_info_t::phy_11b (C++ 成员), 669
wifi_sta_info_t::phy_11g (C++ 成员), 669

wifi_sta_info_t::phy_11n (C++ 成员), 669
wifi_sta_info_t::phy_lr (C++ 成员), 669
wifi_sta_info_t::reserved (C++ 成员), 670
wifi_sta_info_t::rssi (C++ 成员), 669
wifi_sta_list_t (C++ 类), 670
wifi_sta_list_t::num (C++ 成员), 670
wifi_sta_list_t::sta (C++ 成员), 670
WIFI_STATIC_TX_BUFFER_NUM (C 宏), 663
WIFI_STATIS_ALL (C 宏), 676
WIFI_STATIS_BUFFER (C 宏), 676
WIFI_STATIS_DIAG (C 宏), 676
WIFI_STATIS_HW (C 宏), 676
WIFI_STATIS_RXTX (C 宏), 676
WIFI_STORAGE_FLASH (C++ 枚举子), 681
WIFI_STORAGE_RAM (C++ 枚举子), 681
wifi_storage_t (C++ 类型), 681
WIFI_TASK_CORE_ID (C 宏), 663
WIFI_VENDOR_IE_ELEMENT_ID (C 宏), 675
wifi_vendor_ie_id_t (C++ 类型), 681
wifi_vendor_ie_type_t (C++ 类型), 681
WIFI_VND_IE_ID_0 (C++ 枚举子), 681
WIFI_VND_IE_ID_1 (C++ 枚举子), 681
WIFI_VND_IE_TYPE_ASSOC_REQ (C++ 枚举子), 681
WIFI_VND_IE_TYPE_ASSOC_RESP (C++ 枚举子), 681
WIFI_VND_IE_TYPE_BEACON (C++ 枚举子), 681
WIFI_VND_IE_TYPE_PROBE_REQ (C++ 枚举子), 681
WIFI_VND_IE_TYPE_PROBE_RESP (C++ 枚举子), 681
wl_erase_range (C++ 函数), 1311
wl_handle_t (C++ 类型), 1313
WL_INVALID_HANDLE (C 宏), 1313
wl_mount (C++ 函数), 1311
wl_read (C++ 函数), 1312
wl_sector_size (C++ 函数), 1313
wl_size (C++ 函数), 1312
wl_unmount (C++ 函数), 1311
wl_write (C++ 函数), 1312

X

xEventGroupClearBits (C++ 函数), 1433
xEventGroupClearBitsFromISR (C 宏), 1438
xEventGroupCreate (C++ 函数), 1429
xEventGroupCreateStatic (C++ 函数), 1430
xEventGroupGetBits (C 宏), 1441
xEventGroupGetBitsFromISR (C++ 函数), 1438
xEventGroupSetBits (C++ 函数), 1434
xEventGroupSetBitsFromISR (C 宏), 1439
xEventGroupSync (C++ 函数), 1435
xEventGroupWaitBits (C++ 函数), 1431
xQueueAddToSet (C++ 函数), 1365
xQueueCreate (C 宏), 1367
xQueueCreateSet (C++ 函数), 1364
xQueueCreateStatic (C 宏), 1368
xQueueGenericCreate (C++ 函数), 1364
xQueueGenericCreateStatic (C++ 函数), 1364
xQueueGenericReceive (C++ 函数), 1359
xQueueGenericSend (C++ 函数), 1357
xQueueGenericSendFromISR (C++ 函数), 1356
xQueueGiveFromISR (C++ 函数), 1357
xQueueIsQueueEmptyFromISR (C++ 函数), 1357
xQueueIsQueueFullFromISR (C++ 函数), 1357
xQueueOverwrite (C 宏), 1374
xQueueOverwriteFromISR (C 宏), 1382
xQueuePeek (C 宏), 1376
xQueuePeekFromISR (C++ 函数), 1359
xQueueReceive (C 宏), 1378
xQueueReceiveFromISR (C++ 函数), 1362
xQueueRemoveFromSet (C++ 函数), 1366
xQueueReset (C 宏), 1385
xQueueSelectFromSet (C++ 函数), 1366
xQueueSelectFromSetFromISR (C++ 函数), 1367
xQueueSend (C 宏), 1373
xQueueSendFromISR (C 宏), 1384
xQueueSendToBack (C 宏), 1371
xQueueSendToBackFromISR (C 宏), 1381
xQueueSendToFront (C 宏), 1370
xQueueSendToFrontFromISR (C 宏), 1380
xRingbufferAddToQueueSetRead (C++ 函数), 1456
xRingbufferCanRead (C++ 函数), 1456
xRingbufferCreate (C++ 函数), 1450
xRingbufferCreateNoSplit (C++ 函数), 1451
xRingbufferGetCurFreeSize (C++ 函数), 1456
xRingbufferGetMaxItemSize (C++ 函数), 1455
xRingbufferPrintInfo (C++ 函数), 1457
xRingbufferReceive (C++ 函数), 1452

xRingbufferReceiveFromISR (C++ 函数), 1452
xRingbufferReceiveSplit (C++ 函数), 1453
xRingbufferReceiveSplitFromISR (C++ 函数), 1453
xRingbufferReceiveUpTo (C++ 函数), 1454
xRingbufferReceiveUpToFromISR (C++ 函数), 1454
xRingbufferRemoveFromQueueSetRead (C++ 函数), 1457
xRingbufferSend (C++ 函数), 1451
xRingbufferSendFromISR (C++ 函数), 1451
xSemaphoreCreateBinary (C 宏), 1386
xSemaphoreCreateBinaryStatic (C 宏), 1387
xSemaphoreCreateCounting (C 宏), 1401
xSemaphoreCreateCountingStatic (C 宏), 1402
xSemaphoreCreateMutex (C 宏), 1397
xSemaphoreCreateMutexStatic (C 宏), 1398
xSemaphoreCreateRecursiveMutex (C 宏), 1399
xSemaphoreCreateRecursiveMutexStatic (C 宏), 1400
xSemaphoreGetMutexHolder (C 宏), 1404
xSemaphoreGive (C 宏), 1391
xSemaphoreGiveFromISR (C 宏), 1394
xSemaphoreGiveRecursive (C 宏), 1393
xSemaphoreTake (C 宏), 1388
xSemaphoreTakeFromISR (C 宏), 1396
xSemaphoreTakeRecursive (C 宏), 1389
xTASK_SNAPSHOT (C++ 类), 1351
xTASK_SNAPSHOT::pxEndOfStack (C++ 成员), 1352
xTASK_SNAPSHOT::pxTCB (C++ 成员), 1352
xTASK_SNAPSHOT::pxTopOfStack (C++ 成员), 1352
xTASK_STATUS (C++ 类), 1351
xTASK_STATUS::eCurrentState (C++ 成员), 1351
xTASK_STATUS::pcTaskName (C++ 成员), 1351
xTASK_STATUS::pxStackBase (C++ 成员), 1351
xTASK_STATUS::ulRunTimeCounter (C++ 成员), 1351
xTASK_STATUS::usStackHighWaterMark (C++ 成员), 1351
xTASK_STATUS::uxBasePriority (C++ 成员), 1351
xTASK_STATUS::uxCurrentPriority (C++ 成员), 1351
xTASK_STATUS::xCoreID (C++ 成员), 1351
xTASK_STATUS::xHandle (C++ 成员), 1351
xTASK_STATUS::xTaskNumber (C++ 成员), 1351
xTaskCallApplicationTaskHook (C++ 函数), 1340
xTaskCreate (C++ 函数), 1323
xTaskCreatePinnedToCore (C++ 函数), 1322
xTaskCreateStatic (C++ 函数), 1325
xTaskCreateStaticPinnedToCore (C++ 函数), 1324
xTaskGetApplicationTaskTag (C++ 函数), 1338
xTaskGetIdleTaskHandle (C++ 函数), 1340
xTaskGetIdleTaskHandleForCPU (C++ 函数), 1340
xTaskGetTickCount (C++ 函数), 1337
xTaskGetTickCountFromISR (C++ 函数), 1337
xTaskNotify (C++ 函数), 1344
xTaskNotifyFromISR (C++ 函数), 1346
xTaskNotifyGive (C 宏), 1353
xTaskNotifyWait (C++ 函数), 1347
xTaskResumeAll (C++ 函数), 1336
xTaskResumeFromISR (C++ 函数), 1334
xTimerChangePeriod (C 宏), 1417
xTimerChangePeriodFromISR (C 宏), 1425
xTimerCreate (C++ 函数), 1405
xTimerCreateStatic (C++ 函数), 1408
xTimerDelete (C 宏), 1419
xTimerGetExpiryTime (C++ 函数), 1412
xTimerGetPeriod (C++ 函数), 1412
xTimerGetTimerDaemonTaskHandle (C++ 函数), 1412
xTimerIsTimerActive (C++ 函数), 1411
xTimerPendFunctionCall (C++ 函数), 1414
xTimerPendFunctionCallFromISR (C++ 函数), 1413
xTimerReset (C 宏), 1419
xTimerResetFromISR (C 宏), 1427
xTimerStart (C 宏), 1416
xTimerStartFromISR (C 宏), 1422
xTimerStop (C 宏), 1416
xTimerStopFromISR (C 宏), 1424

环境变量

CONFIG_EFUSE_CUSTOM_TABLE, 1505
CONFIG_EFUSE_MAX_BLK_LEN, 1505
CONFIG_EFUSE_VIRTUAL, 1510
CONFIG_ESPTOOLPY_FLASHSIZE, 1229
CONFIG_EVENT_LOOP_PROFILING, 1538
CONFIG_LOG_DEFAULT_LEVEL, 1526, 1527
CONFIG_SPIRAM_BANKSWITCH_ENABLE, 1487
CONFIG_SPIRAM_BANKSWITCH_RESERVE, 1487
CONFIG_USE_ONLY_LWIP_SELECT, 1291
EFUSE_CODE_SCHEME_SELECTOR, 1507